SITE ASSESSMENT AND RELEASE INVESTIGATION REPORT

For

BIRD CREEK TEXACO
UST SYSTEM

Located at

Mile 101 Seward Highway
Indian, Alaska 99540
ADEC UST Facility #2715

0002 L26,21

Alaska Complete & Tank

2700 HUFFMAN ROAD
ANCHORAGE ALASKA 99516
(907) 345-8339
Toll Free 888-330-8339
Fax (907) 345-8370

SITE ASSESSMENT AND RELEASE INVESTIGATION REPORT

For

BIRD CREEK TEXACO UST SYSTEM

Located at

Mile 101 Seward Highway
Indian, Alaska 99540
ADEC UST Facility #2715

PREPARED FOR

Doug Lechner
Shoreside Petroleum, Inc.
P.O. Box 1189
Seward, Alaska 99664

ACT Project No. 2041

February 12, 2001

TABLE OF CONTENTS

1.0 INTRODUCTION 1
1.1 Background 1
1.2 Purpose and Scope 1
1.3 Project Organization 2
1.4 ADEC Notifications 2
2.0 UST ASSESSMENT FINDINGS 3
2.1 Diesel Dispenser and Piping Run 3
2.2 Tank Top Excavations 4
2.3 Contaminated Soil Treatment and Disposal 5
3.0 RELEASE INVESTIGATION 6
3.1 Test Borings 6
3.2 Corrective Action 7
4.0 QUALITY ASSURANCE/QUALITY CONTROL 8
5.0 CONCLUSIONS 9

Figures

Figure 1 Site Location Map
Figure 2 Former UST System Layout
Figure 3 New UST System Layout
Figure 4 PID Screening and Sample Results

Tables

Table 1 Sample Quality Control Summary

Appendices

Appendix A ADEC Notifications
Appendix B ADEC UST Site Assessment and Release Investigation Summary Form
Appendix C Soil Boring Logs
Appendix D Soil Sample Analytical Results
Appendix E Soil Remediation Confirmation Letter From ASR

1.0 INTRODUCTION

0004

1.1 Background

Shoreside Petroleum. Inc. (Shoreside) contracted with Pinnacle Construction (Pinnacle) to upgrade the Bird Creek Texaco (Site) underground storage tank (UST) system at mile 101 Seward Highway, Indian, Alaska (See Figure 1). Pinnacle contracted with Alaska Complete Tank (ACT) to complete environmental assessment during the upgrade work on the three compartment 12,000-gallon UST system at the site. This UST was installed in 1993 according to the Alaska Department of Environmental Conservation (ADEC) UST database. The assessment completed lead to further investigation of releases from turbines on the tank.

After the initial site assessment and the discovery of releases at the turbines on the UST, Shoreside contracted directly with ACT for further site assessment and release investigation. ACT further assessed the soils near the turbines by directing Pinnacle to excavate deeper in these areas. Because of site constraints, minimal soil excavation was completed in the turbine areas. Therefore, ACT completed a release investigation by drilling two test borings along the north side of the 12,000-gallon tank.

The piping and dispensers for the fuel islands located west of the store building on-site were not modified during the upgrade work. However, a new 15,000-gallon gasoline UST was installed as part of the system upgrades. ACT was not present during the excavation of this UST. The layouts of the former and upgraded UST systems at the site are shown in Figures 2 and 3, respectively.

1.2 Purpose and Scope

The purpose of the environmental assessment was to investigate for petroleum release during upgrade of the 12,000-gallon UST system (see Figure 2). The release investigation work was completed to investigate the fuel releases discovered during the site assessment.

The scope of the site assessment included environmental screening and sampling for petroleum hydrocarbons during the removal and replacement of the former diesel fuel piping system and other tank top upgrades. 0005

The scope of the release investigation work included installation of two test borings. Corrective actions included the excavation and treatment of contaminated soils and installation of piping for future remediation efforts.

Field procedures and methods for the activities associated with the above outlined phases of work were conducted in accordance with 18 AAC 78 and the December 10, 1998, ADEC UST Procedures Manual.

1.3 *Project Organization*

- Owner/Operator – Shoreside Petroleum, Inc.
- Third Party Environmental Assessor – Chris Hawe, Alaska Complete Tank (ACT).
- ADEC UST Certified Contractor – Steve Pohl, Pinnacle Construction, ADEC Certification #387.
- ADEC Certified Laboratory – CT&E Environmental Services, Inc., Anchorage, Alaska.

1.4 *ADEC Notifications*

- Oil & Hazardous Materials Incident Report Form, submitted by ACT on May 24, 2000 (See Appendix A).
- ADEC approval for treatment of contaminated soil excavated during the site assessment at Alaska Soil Recycling (ASR) obtained July 6, 2000 (see Appendix A).
- ADEC Storage Tank Program Site Assessment Summary form submitted with this report (see Appendix B).

2.0 UST ASSESSMENT FINDINGS

0006

2.1 *Diesel Dispenser and Piping Run*

On May 11, 2000, Chris Hawe, Environmental Engineer with ACT, assessed the soil below the diesel piping and dispenser. The photo to the right shows the piping from the turbine to the dispenser area. Figure 4 and the photo below show the area excavated to remove the piping and dispenser.

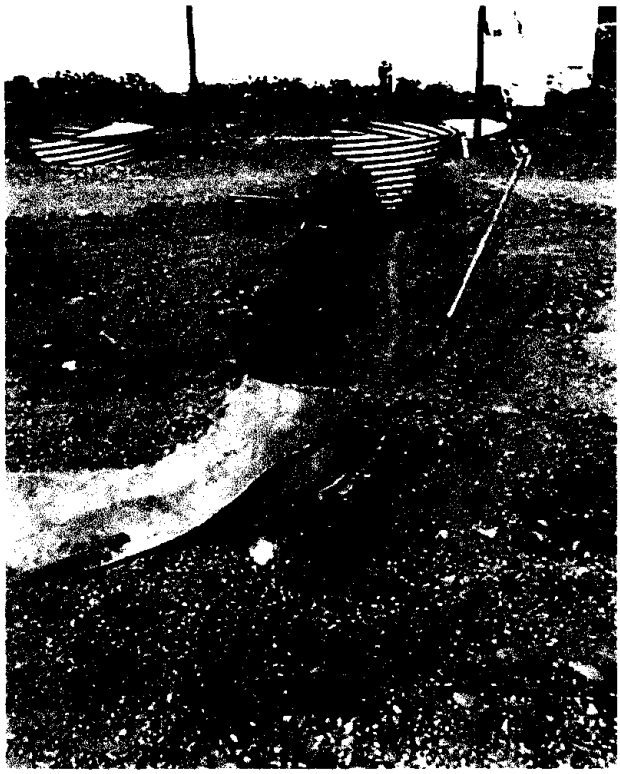

Above is the former diesel dispenser piping. Below is the piping and dispenser excavation.

Mr. Hawe was present to collect samples for headspace screening using a photoionization detector (PID) and for submittal to a laboratory for analytical testing. PID headspace screening was completed using a Photovac Model 2020 PID. The locations of screening points and the samples submitted to the laboratory for testing are shown in Figure 4.

Contaminated soil was discovered in the diesel dispenser area. Contaminated soil in this area extended from ground surface to a depth of approximately 4 feet. From the distribution of contamination in the dispenser area, the release appeared to be from overspills near the dispenser.

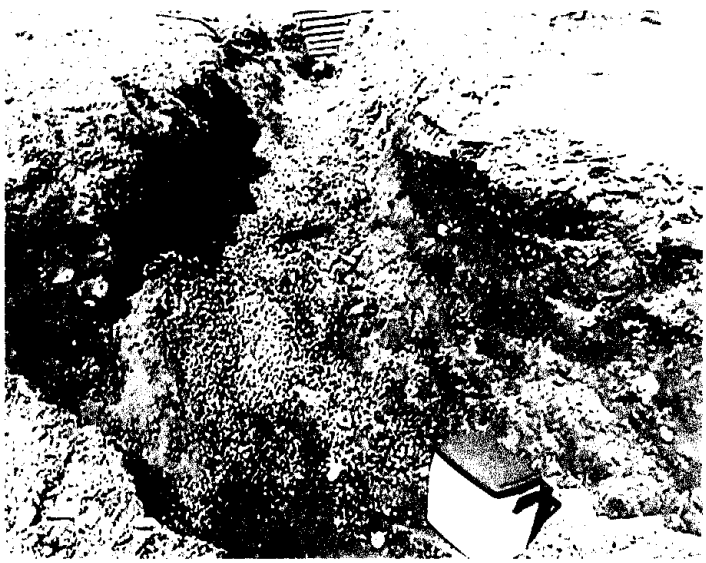

Contaminated soil was not discovered along the length of piping from the UST to the dispenser. Results of PID headspace screening in this area are shown in Figure 4. As shown by PID results in Figure 4, the extent of contamination in the dispenser area was defined and removed.

Soil samples collected from the diesel dispenser excavation area were submitted to CT&E Environmental Services in Anchorage, Alaska for analyses of diesel range organics (DRO) by Alaska Method AK102 and benzene, toluene, ethylbenzene, and xylene (BTEX) by EPA Method 8021B. Neither the soil samples (S1 and its duplicate S2) collected at a depth of 4.5 feet from the bottom of the dispenser excavation, nor the sample (S3) collected at a depth of 1.75 feet to the side of the dispenser had contaminant concentrations above the most stringent ADEC cleanup levels. The analytical results of these soil samples are shown in Figure 4 and included in Appendix D.

2.2 Tank Top Excavations

PID headspace screening was completed on the areas excavated for the tank top upgrades on May 20, 2000. Contaminated soil was discovered below each of the three dispenser sumps on the tank. Contaminated soil in this area was excavated to depths between approximately 2.5 feet over the top of the UST and 4.5 feet along the north side of the UST near the diesel turbine. The soil in this area was mainly pea gravel used for backfill around the UST, although to a depth of approximately 2.5 feet a sand and gravel backfill layer was present. A geofabric material marked the top of the pea gravel, which was located only a couple of inches above the top of the UST.

Seals for piping into the plastic turbine sumps were either not present or faulty. This resulted in releases from overfills at the fill ports and possibly leaks at loose piping connections at the turbines (both in the sumps) impacting soil at the site. The releases from turbine/fill port areas migrated primarily downward into pea gravel along the tank sides, at least at shallower depths. The photos on the following page show the diesel turbine sump and the impact to soil below the sump.

UST turbine sump with impacted soil below it. Note the fill port next to the turbine and the depth of the top of the impacted soil (e.g. the top of the tank).

Very little of the contamination in this area could be removed due to the in-place system components (including the new 15,000-gallon gasoline UST), building structures and the fact that the contamination preferably migrated in the pea gravel backfill along the tank sides.

Contaminated soil was discovered at each of the three turbines on the UST. Results of PID headspace screening in this area are shown in Figure 4. As shown by PID results in Figure 4, the extent of contamination in the turbine areas was not defined.

2.3 Contaminated Soil Treatment and Disposal

Approximately 47 tons of contaminated soil was removed from areas excavated near the tank top and diesel dispenser. The stockpiled contaminated soil was sampled and then, following approval from ADEC, the contaminated soil was transported to Alaska Soil Recycling (ASR) in Anchorage, Alaska, for thermal remediation and disposal. A letter from ASR indicating successful remediation of the contaminated soil is shown in Appendix E.

Also sampled and treated by ASR along with the above soil were approximately 18 more tons of contaminated soil from a release caused by Construction Unlimited while filling a fuel truck at the former diesel dispenser. See the ADEC approval for soil treatment at ASR in Appendix A.

3.0 RELEASE INVESTIGATION

3.1 Test Borings

The primary task of the release investigation was to identify the vertical extent of soil contamination in the area of the turbines/fill ports. Release investigation was completed on September 15 and 16, 2000, with the installation of two test borings in the locations shown in Figure 4. Chris Hawe, Environmental Engineer with ACT, was present during the drilling to log the test borings as well as to collect samples for headspace screening using a photoionization detector (PID) and for submittal to a laboratory for analytical testing. PID headspace screening was completed using a Photovac Model 2020 PID. Soil samples were collected in the borings at five foot intervals using a 2-1/2" outside diameter by 2 foot long split spoon sampler driven by a manually operated 340-pound hammer. Soil logs for the borings are included in Appendix C.

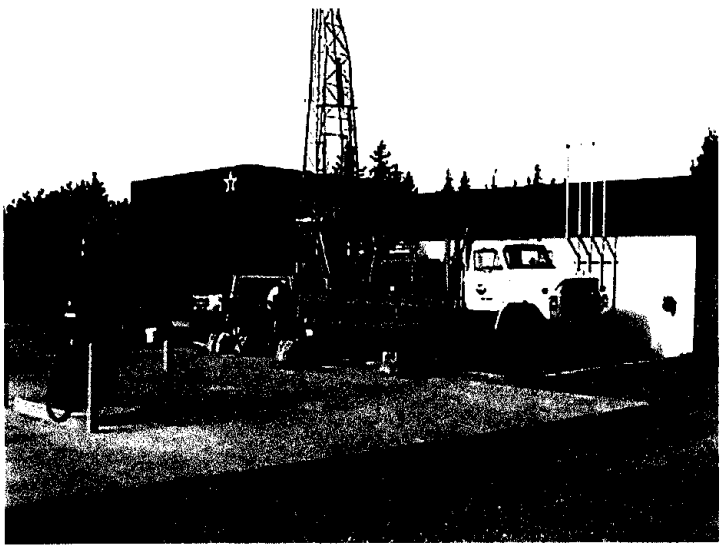

Drilling test boring TB-1.

The subsurface soil logged in the two test borings was consistent along the north side of the tank. A sand and gravel with silt and cobbles was present immediately below ground surface to a depth of approximately 2.5 feet. Below this soil, pea gravel from the UST backfill was present to a depth of approximately 12.5 feet in test boring TB-1. Test boring TB-2 was drilled slightly farther from the UST and only about 1 foot of the pea gravel was present below the surface soils at the TB-2 location. Below the pea gravel in both test borings was silty sand and sandy silt with varying amounts of gravel. The sand grain size ranged from fine to medium. At a depth of 29 feet in TB-1, gravelly clay with some sand was encountered. The soils logged were dry to moist to a depth of approximately 29 feet where medium-coarse sand overlaid gravelly clay. The sand and gravelly clay were wet. No ground water equilibrated in the screen section of TB-1 after setting for 24 hours, or in TB-2 after the screen section was installed.

PID results, shown in the test boring soil logs in Appendix A, displayed that soil contamination was present to depths of approximately 27 to 29 feet. The PID results for soils at these depths were near background levels. Soil samples were collected from several split spoons driven in each boring and submitted to CT&E Environmental Services in Anchorage, Alaska for analyses of diesel range organics (DRO) by Alaska Method AK102, gasoline range organics (GRO) by Alaska Method AK101, and benzene, toluene, ethylbenzene, and xylene (BTEX) by EPA Method 8021B. The analytical results for the boring soil samples are shown in Figure 4 and included in Appendix D.

As shown by the analytical results for test boring soil samples, contamination levels in the subsurface at the site displayed a decreasing trend from high contaminant levels near the bottom of the UST (approximately 11 feet deep) to little to no detectable contaminants near the bottom of the borings. At the deepest sampled depth in test boring TB-1 (30.5 feet), benzene was the only contaminant above allowable ADEC levels, although only marginally. All other contaminants at this depth were present at non-detectable levels or levels well below the ADEC allowable levels. Soil at 26.5 feet below ground surface in TB-2, the deepest sample collected in TB-2, had a benzene concentration above the ADEC cleanup level. All other contaminants were not detectable at this depth.

Additionally, except for the shallowest samples collected in each boring between 11.5 and 13.5 feet below ground surface, where GRO, DRO, and other BTEX compounds are present above allowable levels, benzene was the only contaminant present above ADEC allowable levels in the borings. Benzene was shown to continually decrease with depth until only detectable marginally above the ADEC allowable level.

3.2 Corrective Action

Test boring TB-1 was installed with 25 feet of PVC 10-slot (0.010-inch) screen and TB-2 was installed with 20 feet of this screen to be used for future in-situ remediation. Construction details of these remediation wells are shown in the soil logs in Appendix C.

Because the contaminant levels at 30.5 feet in TB-1 marginally exceed the ADEC cleanup level, further release investigation may be necessary to determine the depth to ground water, and if it has been impacted. The timing of this further release investigation and the full scope

of work involved in completing further investigation are being considered as the options for corrective action are analyzed

4.0 QUALITY ASSURANCE/QUALITY CONTROL

The collection, analysis, and interpretation of the samples for all phases of the work for this project were completed following guidelines set forth in the ADEC December 10, 1998 UST procedures manual. All samples collected during this project were delivered to CT&E Environmental Services, Inc., in Anchorage, Alaska, following chain-of-custody procedures, for analytical testing.

The Alaska Complete Tank Quality Assurance Officer completed a review of all field and laboratory reports relevant to each environmental activity completed for the project. All samples collected during the site assessment and release investigation were identified to be valid based on quality assurance and control criteria used to review the data.

All field documentation was reviewed for completeness, accuracy, the presence of unexpected results, and adherence to sampling protocols. All field data met the required criteria and unexpected results were not encountered.

All laboratory analyses were conducted following standard laboratory Quality Assurance/Quality Control (QA/QC) procedures by a laboratory that has been approved in accordance with 18 AAC 78. The QA/QC indicators verified that laboratory analytical results were precise and complete. The laboratory QC indicators for trip blanks, surrogate recovery, and completeness were all within an acceptable range. Recommended extraction and analytical holding times were met for all soil samples.

Two duplicate soil sample sets were collected and analyzed in order to document the precision of the sampling process. Table 1 provides a comparison of the quality control criteria with the results for this project.

TABLE 1: SAMPLE QUALITY CONTROL SUMMARY

Quality Control Criteria	Tolerance	Results for This Project
Holding times:		
BTEX - soil: to extract/to analyze	Field / 14 days	Criteria Met
GRO - soil: to extract/to analyze	Field / 28 days	Criteria Met
DRO - soil: to extract/to analyze	14 days / < 40days	Criteria Met
Field duplicates - Precision:		
BTEX: soil	±40%	0 - 52%
GRO: soil	±50%	0%
DRO: soil	±50%	0 - 22%
Completeness:		
All samples	85%	100%

Note: The precision is reported in relative percent difference.

As shown in Table 1, the duplicate field samples were not all within acceptable tolerance. BTEX for the test boring TB-1 duplicate sample was not within the set tolerance. Not meeting the QC tolerance for this duplicate sample set is the result of low levels of BTEX compounds in the collected samples and heterogeneity in the soil matrix. Therefore, the failure to meet the specified tolerance for BTEX does not affect the analytical results for this project.

5.0 CONCLUSIONS

The site assessment and release investigation identified four separate releases at the Bird Creek Texaco 12,000-gallon UST system. One of these releases was discovered below the diesel dispenser. From the distribution of contamination in the dispenser area, the release appeared to be from overspills near the dispenser. Soil was excavated to a depth of 4.5 feet below the dispenser to remove contaminated soil. Soil samples (S1, its duplicate S2, and S3) were collected from the area of the diesel dispenser excavation and they confirmed that all contaminated soil was removed to acceptable levels.

The other three releases were discovered below each of the three dispenser sumps on the tank. Contaminated soil in these areas was excavated to depths between approximately 2.5 feet over the top of the UST and 4.5 feet along the north side of the UST near the diesel turbine. These turbine releases appeared to be from piping seals on the plastic turbine sumps that were either not present or faulty. Therefore overfills at the fill ports located near the turbine in these sumps and possibly leaks from loose piping connections at the turbines were not contained. Releases from these areas migrated primarily downward in pea gravel along

the tank sides, at least at shallower depths. Because of the high contaminant levels detected by PID screening in the pea gravel below these releases, no soil samples were collected.

Following the assessment of the UST upgrade excavations, two test borings were installed along the north side of the UST. PID screening and analytical results for samples from the borings displayed decreasing contamination with depth in each boring. Except for contaminants in the shallowest samples collected in each boring between 11.5 and 13.5 feet below ground surface, where GRO, DRO, and other BTEX compounds were present above allowable levels, benzene was the only contaminant present above ADEC allowable levels in the borings. Benzene was shown to continually decrease with depth until it was only marginally above the ADEC allowable level at a depth of 30.5 feet

Screen sections were installed throughout the vertical extent of contamination in the two test borings for use as remediation wells. Following the analysis of corrective actions applicable for the site, which will include review of further release investigation activities that may be necessary, a corrective action plan will be prepared for ADEC review.

FIGURES

Figure 1 Site Location Map

Figure 2 Former UST System Layout

Figure 3 New UST System Layout

Figure 4 PID Screening and Sample Results

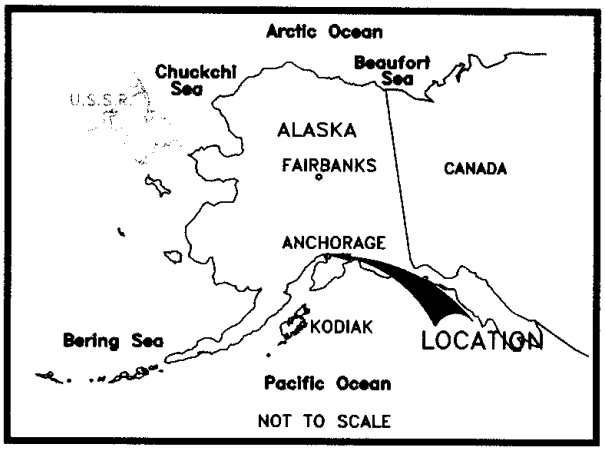

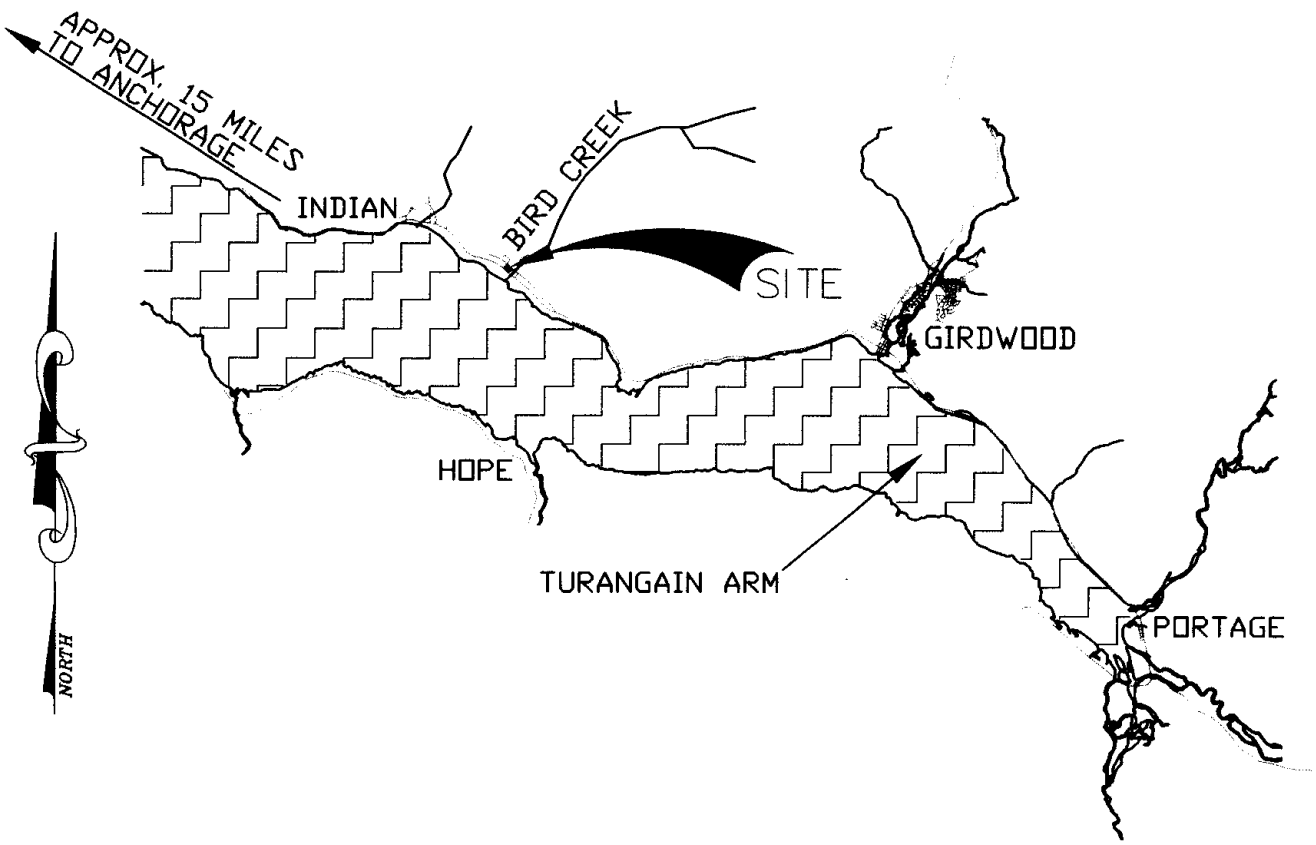

DWG FILE: C:\My_Docs\Projects\2041\Bird_Creek__SA_Report_Fig_1

BIRD CREEK TEXACO – FIGURE 1: SITE LOCATION MAP

ALASKA COMPLETE TANK	2700 Huffman Road Anchorage, AK 99516 (907) 345-8339 Toll Free 888-330-8339 Fax (907) 345-8370	SCALE: NTS	DRAWN BY: CJH
		DATE: 2/08/01	CHECKED BY: CJH
		PROJECT No. 2041	

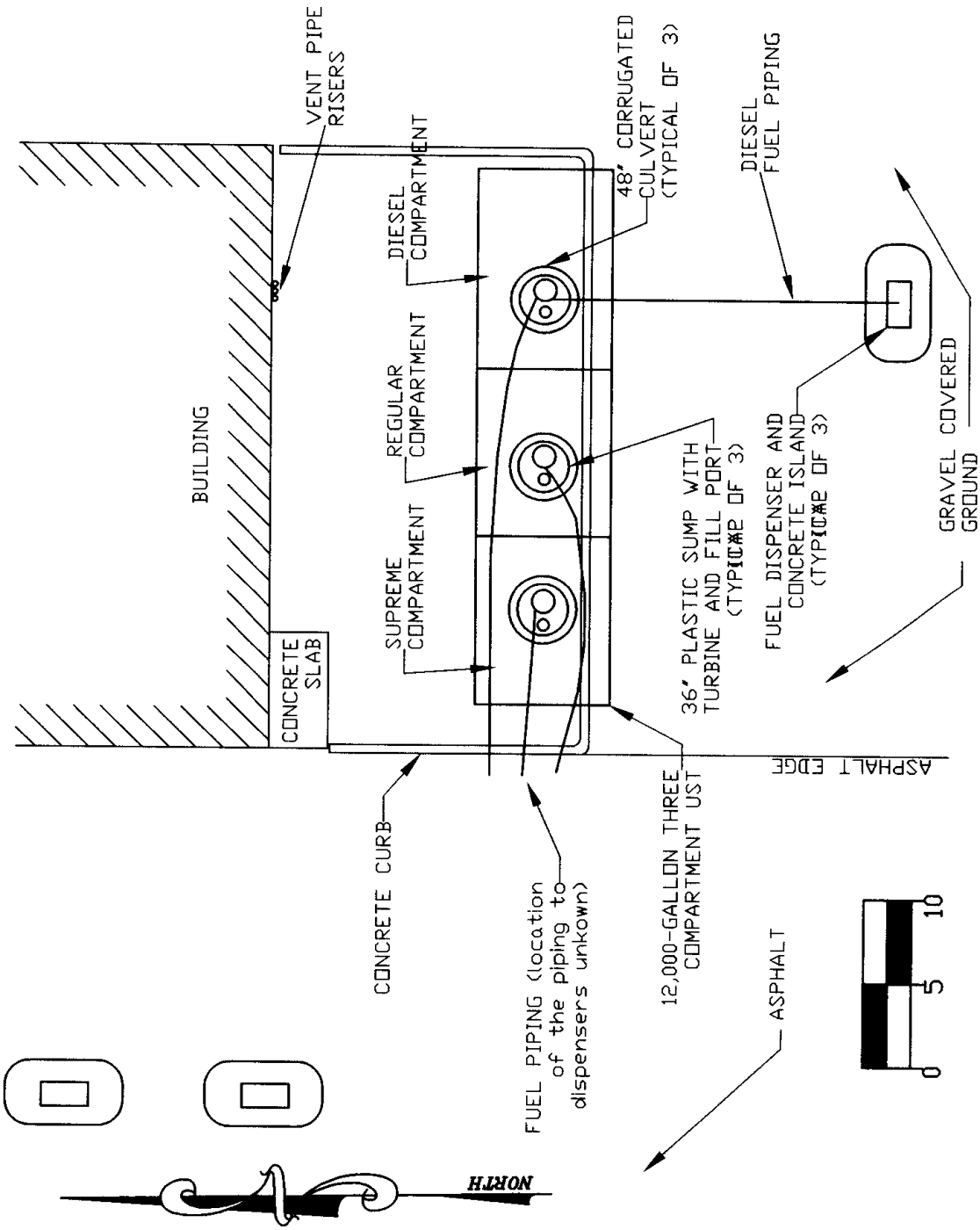

DWG FILE: C:\My_Docs\Projects\2041\Bird_Creek__SA_Report_Fig_2

BIRD CREEK TEXACO – FIGURE 2: FORMER UST SYSTEM LAYOUT

ALASKA COMPLETE TANK
2700 Huffman Road
Anchorage, AK 99516
(907) 345-8339
Toll Free 888-330-8339
Fax (907) 345-8370

SCALE: 1"=10'	DRAWN BY: CJH
DATE: 2/10/01	CHECKED BY: CJH
PROJECT No. 2041	

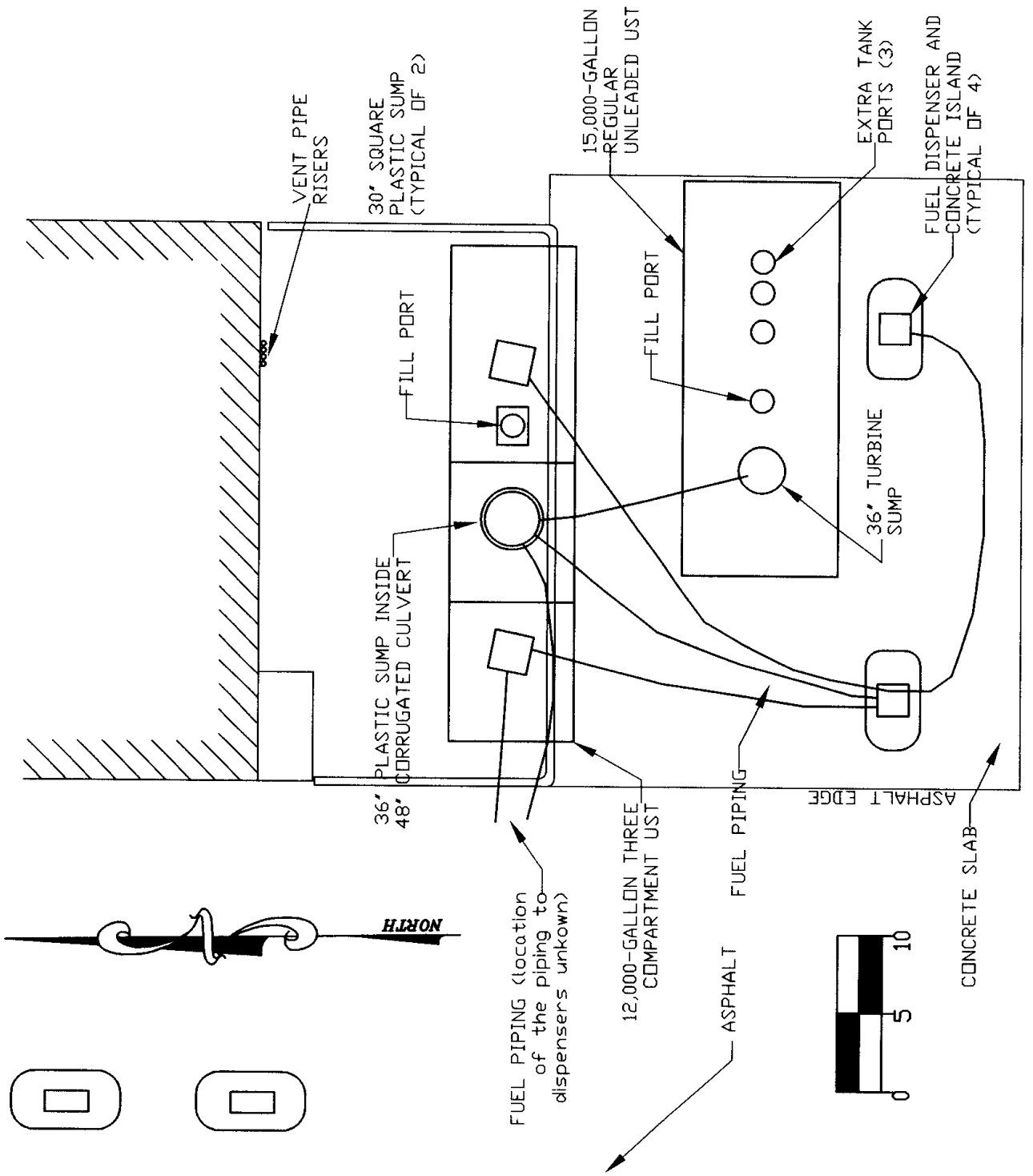

BIRD CREEK TEXACO – FIGURE 3: NEW UST SYSTEM LAYOUT

ALASKA COMPLETE TANK

2700 Huffman Road
Anchorage, AK 99516
(907) 345-8339
Toll Free 888-330-8339
Fax (907) 345-8370

SCALE: 1"=10'	DRAWN BY: CJH
DATE: 2/10/01	CHECKED BY: CJH
PROJECT No. 2041	

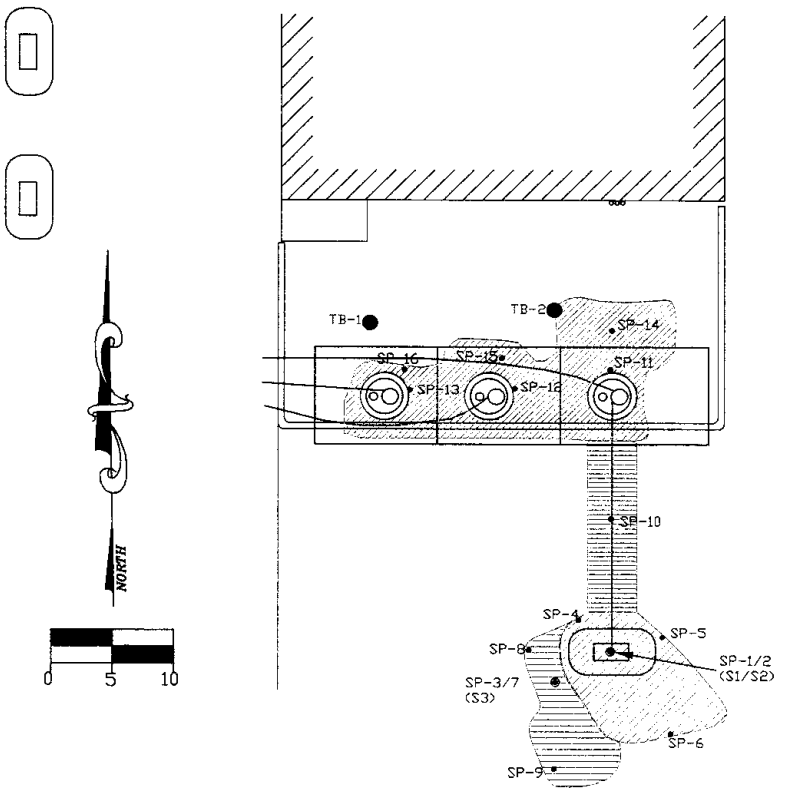

SOIL SAMPLE ANALYTICAL RESULTS									
SAMPLE POINT	DEPTH (feet)	PID HEADSPACE	DRO (mg/kg)	GRO (mg/kg)	BENZENE (mg/kg)	TOLUENE (mg/kg)	ETHYLBENZENE (mg/kg)	XYLENE (mg/kg)	BTEX (mg/kg)
S1	4.5	0.0	52.5	NM	ND	ND	ND	ND	ND
S2 (dup of S1)	4.5	0.0	42.3	NM	ND	ND	ND	ND	ND
S3	1.75	0.0	98.0	NM	ND	ND	ND	ND	ND
TB-1-1	13.5	>2000	5180	2900	8.45	153	62.1	388	611.55
TB-1-2	18.5	240	ND	24.8	1.27	5.32	0.48	3.62	10.69
TB-1-3	23.5	195	ND	17.2	1.39	4.3	0.29	1.53	7.51
TB-1-4	30.5	4.5	ND	ND	0.037	0.107	ND	ND	0.144
TB-1-5 (Dup of TB-1-4)	30.5	4.5	ND	ND	0.0497	0.136	ND	0.0587	0.2444
TB-2-1	11.5	1350	246	516	1.47	13.9	7.38	62.8	85.55
TB-2-2	16.5	225	ND	14.8	0.918	3.14	0.373	1.891	6.322
TB-2-3	21.5	110	ND	6.69	1.74	0.16	0.28	0.65	2.83
TB-2-4	26.5	8.5	ND	ND	0.319	ND	ND	ND	0.319
ADEC Most Stringent Cleanup Levels			100	50	0.02	5.5	5.4	78.0	NA

Red markings show Concentrations that exceed allowable levels
ND indicates non-detectable concentrations

SCREEN POINT	DEPTH (feet)	RESULTS*
SP-1	0.5	180
SP-2 (S1/S2)	4.5	0.0
SP-3	0.5	134
SP-4	0.5	0.0
SP-5	0.5	0.0
SP-6	1.0	0.0
SP-7 (S3)	1.75	0.0
SP-8	1.5	0.0
SP-9	1.0	0.0
SP-10	2.5	0.0
SP-11	2.5	170
SP-12	2.5	16.5
SP-13	2.0	1.1
SP-14	4.5	160
SP-15	3.5	425
SP-16	3.5	1250

*PID UNITS IN PPM RELATIVE TO AN ISOBUTYLENE STANDARD

LEGEND

SP-1/2 (S1/S2) = SAMPLE POINT

SP-3 = PID SCREEN POINT

= SHALLOW EXCAV. (1-2.5')

= DEEP EXCAV. (2.5-4.5')

TB-1 = TEST BORING

0018

DWG FILE: C:\My_Docs\Projects\2058\Bird_Creek_SA_Report_Fig_4

BIRD CREEK TEXACO – FIGURE 4: PID SCREENING AND SAMPLE RESULTS

ALASKA COMPLETE TANK

2700 Huffman Road
Anchorage, AK 99516
(907) 345-8339
Toll Free 888 330-8339
Fax (907) 345-8370

SCALE: 1" = 10'	DRAWN BY: CJH
DATE: 2/10/01	CHECKED BY: CJH
PROJECT No. 2041	

APPENDICES

APPENDIX A

ADEC Notifications

STATE OF ALASKA
DEPARTMENT OF ENVIRONMENTAL CONSERVATION

Oil and Hazardous Materials Incident Report Form

Person Reporting Spill	Title	Phone
Christopher Hawe, P.E.	Director of Engineering	(907) 770-3942

Address
2700 Huffman Road, Anchorage, Alaska 99516

Date Spill Reported/Time	Date Spill Occurred/Time	Knowledge of Spill Time
May 24, 2000 / 0830	Unknown	May 21, 2000

Notifications

☐ USCG _____ Date/Time _____
☐ USF & WS _____ Date/Time _____
☐ State Epidemiologist _____ Date/Time _____
☐ EPA _____ Date/Time _____
☐ ADF&G _____ Date/Time _____
☐ Other _____ Date/Time _____

Weather at Site

Disposal
Contaminated soil stockpiled on-site.

Comments
Contact Chris Hawe for status of release investigation.

Spill Number
☐☐-☐-☐-☐-☐☐☐-☐

Responsible Party	Phone
Shoreside Petroleum, Inc	(907) 224-8040

Address
Seward Alaska

Cause
Leakage at tank turbines and diesel dispenser

Location of Incident
Bird Creek Texaco, Bird Creek Alaska

Product Type	Quantity Spilled	Quantity Recovered
Diesel/Gasoline	Unknown	Approx. 30 yards

Personal Injuries/Damage or Area Affected
Unknown/Subsurface soils around UST

Containment, Cleanup and Restoration Actions
Release investigation being planned

Enforcement Actions

Enforcement Dates	Total Cost	

Prepared By	Date
Christopher Hawe	May 24, 2000

Manufacturer of Hazardous Materials/UN I.D. Number	Prepared by	Date

ALASKA COMPLETE TANK

2700 Huffman Road
Anchorage, Alaska 99516
(907) 345-8339 Fax (907) 345-8370

RECEIVED
JUN 21 2000
Dept. Environmental Conservation
Underground Storage Tanks — FAP

June 20, 2000

Sent via Facsimile to 269-7507

~~Linda Nuecterlein~~ Robert Weimer
Environmental Specialist
UST Program
Alaska Department of Environmental Conservation
555 Cordova Street
Anchorage, Alaska 99501

RE: Request for approval to dispose of contaminated soil
Shoreside Bird Creek Texaco - Bird Creek, Alaska
ADEC Facility ID # 2715
ACT Project No. 2041

Dear Ms. Nuecterlein:

Alaska Complete Tank (ACT) is requesting approval from ADEC to dispose of contaminated soil from two stockpiles generated from activities at the above referenced site. The soil will be transported in trucks to Alaska Soil Recycling (ASR) located at 2300 Spar Avenue, Anchorage, Alaska, for thermal remediation and disposal. One of the stockpiles (new stockpile) was created during the excavation of diesel piping and its associated dispenser under my direction between May 11-20, 2000. The other (old stockpile) was created last fall by Construction Unlimited when they excavated soil associated with a release while filling their fuel truck at the Bird Creek Texaco. I have sampled both stockpiles (analytical attached) and request approval from ADEC to transport this soil to ASR in Anchorage for thermal treatment and disposal. The new stockpile samples are labeled NSP1 and NSP2, and the old stockpile samples are labeled OSP1 and OSP2.

Please indicate your approval of this ~~disposal~~ treatment method by signing below and faxing it back to us at 345-8370. BTEX, GRO, DRO soils

Robert Weimer ADEC Date 7/6/00

≈ 30 cy "new stockpile" diesel
≈ 3 cy "old stockpile" diesel

2041 ADEC Request for Soil Disposal Approval

Post-it® Fax Note 7671	Date 7/6/00	# of pages ▶ 1
To Chris Hawe	From R. Weimer	
Co./Dept. ACT	Co. DEC	
Phone # 345-8339	Phone # 269-7525	
Fax # 345-8370	Fax # 269-7507	

APPENDIX B

ADEC UST Site Assessment and Release Investigation Summary Form

APPENDIX B
ADEC Storage Tank Program
Site Assessment & Release Investigation Summary Form

0024

This document summarizes information from site assessments and release investigation reports that are required by Alaska's Underground Storage Tanks Regulations (18 AAC 78). It is intended to ensure minimum requirements are met when submitting full reports to ADEC. It cannot be substituted for comprehensive site assessment or release investigation reports. Site assessments (as defined in AS 46.03.450) are conducted to check for the presence or absence of petroleum contamination. If contamination of soil or groundwater is identified then a release investigation is required. Site assessments and release investigations must be conducted by a qualified impartial third party (as defined in 18 AAC 78) and in accordance with chapter two of the Underground Storage Tanks Procedures Manual (UST Manual).

How to fill out this form

Type or print in ink the requested information and sign in ink the "signature" blocks on page 7. Please attach this form to the comprehensive site assessment or release investigation report (or include it in the report introduction) and submit it to the nearest ADEC field operations office (Juneau, Anchorage, Fairbanks or Soldotna).

1. GENERAL INFORMATION

Purpose of Site assessment/ Release investigation: UST System Upgrades
(Closure, Change-in-service, Suspected or confirmed release, Compliance check, Other)

Owner of site: Shoreside Petroleum, Inc. (907) 224-8040
Name of company/legal entity that owns the site — Phone number
P.O. Box 1189 Seward, Alaska 99664
Mailing address — City, State, Zip code

Operator of site: Same as above
Name of company/legal entity that operates the site — Phone number
Same as above
Mailing address of operator — City, State, Zip code

Location of site: Bird Creek Texaco, Mi. 101 Seward Hwy., Indian, Alaska
Name of site (e.g. John Doe's Service Station) — Phone number

Financial Assistance Applications filed (this site only)

☐	☐	☐	☐
Site assessment/ tightness test	Tank cleanup	Tank upgrade	Tank closure

Reports on file with ADEC:

☐	☐	☒
Tightness test	Closure notice	Other

2. SYSTEM AND TANK STATUS

Describe the status, size, and contents of the tanks that have been at the site:

Tank ID Number:	Tank No. 3	Tank No. ____	Tank No. ____	Tank No. ___	Tank No. ___
Tank status (check one)					
Currently in use	X				
Closed/left in place					
Closed/removed					
Total capacity (gallons)	12,000				
Content (diesel etc)	DSL/RUL/PRM				

3. FIRM CONDUCTING SITE ASSESSMENT AND RELEASE INVESTIGATION

Alaska Complete Tank — (907) 345-8339
Name of firm — Phone No.

2700 Huffman Rd — Anchorage, Alaska 99516
Mailing address — City, State, Zip code

Christopher J. Hawe — Christopher J. Hawe
Site assessment supervisor(s) — Person(s) collecting samples

4. SITE HISTORY

Based on the best available knowledge, please check the appropriate box below:

Y	N	
X	___	Was soil contamination observed or identified?
___	X	Was groundwater contamination observed or identified?
___	X	Did inventory control or prior tank repairs indicate a possible release?
___	X	Has a tank tightness test been performed on any USTs on the site?
___	X	Have any of the facility's USTs or piping ever failed a tightness test?
___	X	Have there been any previous site assessments performed at this site?
___	X	Do previous site assessments indicate any contamination has occurred?

If the answer to any of these questions is yes, please describe (or attach copy of report discussion). Give dates and circumstances, use continuation sheet if necessary:

See Attached Site Assessment and Release Investigation Report.

5. FIELD SCREENING ANALYSIS

Date(s) of field screening: 5/11 to 9/16/00 Temperature(s) during screening: 55 °F
Estimated wind speeds: 0-10 mph Weather (clear, raining, etc): Sunny/P. Cloudy
Type of field detection instrument used: photoionization detector
Brand: Photovac Model: HL 2020 Date calibrated: 5/11 to 9/16/00
Number of tests: 28 Range of results: 0.0- >2000

If an instrument wasn't used, what field detection method was used?_____
Number of tests:_____ Range of results:_____

6. COLLECTION OF SOIL SAMPLES

For site assessments done for USTs remaining in place
Check the appropriate boxes below (if not applicable, leave blank):

Y	N	
X	___	Were samples taken from borings (or test pits) within 5 feet of the UST?
X	___	Were samples collected from within 2 feet below the bottom of the UST?
X	___	Were dispensers connected to the UST system?
X	___	Were samples taken from borings (or test pits) adjacent to dispensers?
X	___	Were samples taken from borings (or test pits) adjacent to piping?

How many borings/pits were made? 4 How many samples were analyzed? 12

For site assessments done at excavation and removal of USTs:
Check the appropriate boxes below (if not applicable, leave blank):

Y	N	
___	___	Were any areas of obvious contamination identified or observed?
___	___	Were samples taken from areas of obvious contamination?
___	___	Were at least two discrete analytical samples taken from excavated pit area?
___	___	Was at least one sample taken from below each dispensing island's piping?
___	___	Was at least one sample taken from the piping trench?
___	___	Were the samples referenced above collected taken from native soil within two feet below the bottom of the tank pit or dispenser/piping trench?
___	___	If multiple tanks were removed, were at least three samples collected?
___	___	Were additional samples collected for each 250 square feet of excavated pit over 250 square feet?

Number of distinct points sampled: _____ Estimated excavation's surface area: _____

For all site assessments
Check the appropriate boxes below:

Y	N	
X	___	Were field duplicate samples collected and analyzed?
X	___	Were all samples kept at the appropriate temperature until analysis?
X	___	Were all samples extracted & analyzed within recommended holding times?
X	___	Did chain-of-custody/transfer logs accompany samples to laboratory?

7. LABORATORY ANALYSIS OF SOIL SAMPLES

(see Table 1 of UST Procedures Manual or Table G of 18 AAC 78.800(b))

Identify the possible contaminants benzene, BTEX, diesel, gasoline, lead

Please list the analytical methods used to detect these contaminants in the soil samples, the number of samples analyzed by each method, and the range of results for each method:

Possible Product	Analytical Method	Number of Samples	Range of Results	Location(s) of sample point (s) w/highest level of contamination
Diesel	AK 102	12	ND –5180	Soil in Test Boring TB-1
BTEX	EPA 8021B	12	ND-611.55	Soil in Test Boring TB-1
Gasoline	AK 101	9	ND-2900	Soil in Test Boring TB-1

8. GROUNDWATER INVESTIGATION

Check the appropriate boxes below:

Y	N	
___	X	Was groundwater encountered during the excavation or drilling work?
X	___	Were borings drilled/pits dug at least five feet below the USTs bottom?
___	X	Is groundwater or seasonal high water table known or suspected to exist within five feet of the bottom of the USTs?
___	X	Were samples taken from borings drilled/test pits dug to this water level?
X	___	Were all these samples analyzed within recommended holding times?

How many groundwater/saturated-soil samples were collected & analyzed? 0
How many of these samples were taken from the top 6" of water table? 0
How many field QC samples were analyzed? 1 (Trip blanks) 2 (Duplicates) 0 (Decon blanks)

9. LABORATORY ANALYSIS OF GROUNDWATER SAMPLES

(see Table 1 of UST Procedures Manual or Table G of 18 AAC 78.800(b))
Identify the possible contaminants at the site:): benzene, BTEX, gasoline, diesel

Identify the analytical methods used to detect these contaminants in the water samples, the number of samples analyzed by each method, and the range of results for each method:

Analytical method	Number of samples	Range of results (ppm)	Location(s) of sample point with highest level of contamination

10. DISPOSAL OF MATERIALS

Check the appropriate boxes below (if not applicable, leave blank):

Y	N	
___	__	Were tanks cleaned in accordance with API 2015 (Cleaning Petroleum Storage Tanks)?
X	__	Were the tanks and piping removed and disposed in accordance with API 1604 (Removal and disposal of used petroleum Storage tank?

Where were the tanks and piping disposed? Anchorage Regional Landfill

Where was the tank sludge and rinse water disposed?

11. STOCKPILES

Check the appropriate boxes below:

Y	N	
___	X	Is any soil stockpiled at the site?
___	___	Are soils stockpiled in accordance with 18 AAC 78.311?

12. RELEASE INVESTIGATION

Check the appropriate box below:

Y	N	
X	__	Was any petroleum contamination identified during site assessment? (Answer "yes" if any evidence a release occurred; if no, proceed to item 13)

If contamination was found, what was matrix score for site? Not computed at this time
(Attach completed matrix score sheet to this form)

When did release occur? unkown (Date & time) When was release confirmed? 5/21/00 (Date & time)

When was ADEC notified? 5/24/00 0830 (Date & time) List ADEC staff notified: UST Fax No. (Name)

What is status of UST that prompted the investigation?	In use	Out-of-use, product still in system	Out-of-use; system empty	Permanently closed
	X			

Briefly describe (or attach copy of report discussion) the steps taken to prevent further migration of the release and steps taken to monitor and mitigate fire and safety hazards:

13. SITE SKETCH

Sketch the site in the space below. Alternatively, attach a site map to the back of the form. The sketch (or accompanying narrative) should include the following information:

- locations of all USTs, piping, and dispensers
- distances from tanks to nearby structures
- property line locations
- location and dimensions of excavation(s)
- type of backfill used to surround system
- locations of any known historical releases
- locations of any observed contamination
- location of any boreholes and test pits
- soil types
  - field screening locations and readings
- sampling locations, depths, & sample ID numbers
  - water wells and monitoring wells (if present)
  - depth to groundwater/seasonal high groundwater
  - locations of any stockpiled soils
- north arrow
  - bar scale (specify feet or meters)

For release investigations, in addition to the above information, show the groundwater gradient; surface drainages (including potential hydraulic connections with groundwater) and utility trenches.

See attached site assessment report.

14. QUALITY ASSURANCE

Check the appropriate boxes below:

Y	N	
__	X	Were there deviations from Chapter 2 of the UST Procedures Manual? (Note : That any deviations must be documented in a section of the comprehensive report
X	__	Is a field quality control summary included in the reports?
X	__	Is a laboratory QC summary included in the report for all samples used to verify cleanup levels have been met?

15. CERTIFICATION

The following certification is to be signed by the assessment firm's principal investigator or Quality Assurance Officer:

I certify that except as specifically noted in this report, all statements and data appearing in this report are in conformance with the provisions of Chapter 2 of the UST Procedures Manual.

Christopher Hawe — Director, of Engineering ,and Environmental, Services
(Print name) (Title)

Christopher Hawe — 2/12/00
(Signature) (Date)

The following certification is to be signed by the UST owner/operator (or designated representative):

I certify that I have personally examined and am familiar with the information in this and all attached documents and based on my inquiry of the individuals immediately responsible for obtaining the information, I believe that the submitted information is true, accurate, and complete.

3

Christopher Hawe — Director, of Engineering ,and Environmental, Services
(Print name) (Title)

Christopher Hawe — 2/12/00
(Signature) (Date)

2700 Huffman Rd. — Anchorage, Alaska 99516
(Street Address) (City, State, Zip)

16. ATTACHMENTS

Please check the boxes showing any comprehensive reports attached to this summary:

X Site Assessment Report (include if no release investigation is needed)

X Release Investigation Report (include if release investigation is needed)

APPENDIX C

Soil Boring Logs

Alaska Complete Tank

Log of TB-1

0032

Project	Bird Creek Texaco	Drilling Company	Alaska Complete Tank
Location	Mile 101 Seward Hwy	Date Drilled	9/15/00
Job Number	2041	Casing Elevation	Unkown
Engineer	Chris Hawe	Total Depth of Hole	31.0 Feet
Drill Rig	Mobile B-61, 8" O.D. Auger	Depth to Groundwater	Not Encountered

WELL CONSTRUCTION	DEPTH (feet)	SAMPLE LOCATIONS	SAMPLE NUMBER	PID (units)	BLOWS PER FOOT	GRAPHIC LOG	MATERIALS DESCRIPTION
Flush Mount Locking Cover	0						
2-inch Sch. 40 - PVC Casing with locking cap	-1						Brown Sand and Gravel with cobbles and silt, moist
	-2						
Saturated Bentonite Chips	-3						Pea Gravel (UST backfill), petroleum odor
	-4						
	-5						
	-6						
	-7						
	-8						
Pea Gravel	-9				6		
	-10		HS	1290	13		Pea Gravel, petroleum sheen and odor
	-11						
	-12						Pea Gravel
	-13				49		
	-14		TB-1-1	>2000	52		Brown/tan Silty Fine Sand with gravel, moist, grades into tan/brn sandy silt with gravel, moist-dry
	-15						
	-16						
	-17						
2-inch Sch. 40 - 10 Slot PVC Screen	-18				37		
	-19		TB-1-2	240	48		Silty Fine-Medium Sand with gravel to 2", moist
	-20						
	-21						
	-22						
10-20 Silica Sand	-23				38		Interbedded tan/brown sandy silt with gravel, moist and brown/tan silty fine-medium sand with gravel, moist
	-24		TB-1-3	195	62		
	-25						
	-26						
End Cap	-27						
	-28		HS	14.5	76		Tan Silt/Sandy Silt with gravel, dry-moist
	-29		HS	7.5	55		Medium-coarse sand with gravel and some silt from 28.5-29', wet, grades into a tan gravelly clay with some sand, wet
Casing caght and pulled up during install	-30				57		
	-31		TB-1-4/5	4.5	42		Total Depth = 31'
	-32						
	-33						NOTE: HS indicates a location where a PID headspace reading was recorded but no soil sample was collected
	-34						
	-35						

0033

Alaska Complete Tank

Log of TB-2

Project	Bird Creek Texaco	Drilling Company	Alaska Complete Tank
Location	Mile 101 Seward Hwy	Date Drilled	9/16/00
Job Number	2041	Casing Elevation	Unkown
Engineer	Chris Hawe	Total Depth of Hole	27.0 Feet
Drill Rig	Mobile B-61, 8" O.D. Auger	Depth to Groundwater	Not Encountered

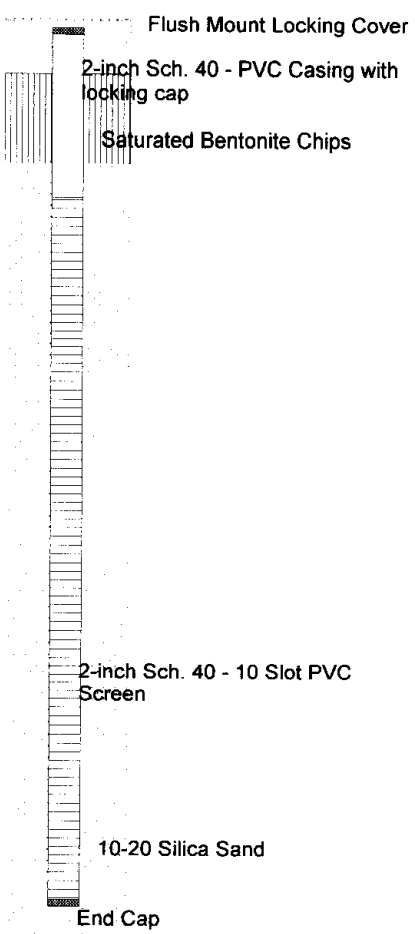

WELL CONSTRUCTION	DEPTH (feet)	SAMPLE LOCATIONS	SAMPLE NUMBER	PID (units)	BLOWS PER FOOT	GRAPHIC LOG	MATERIALS DESCRIPTION
	0						Brown Sand and Gravel with cobbles and silt, moist
	-1						
	-2						Near edge of pea gravel backfill, also drilling some native on outside of auger
	-3						Start into native ground at 2', Sandy Silt/Silty Sand with gravel and cobbles
	-4						
	-5						
	-6						
	-7						
	-8						
	-9						
	-10						
	-11		HS		33		Brown/gray Silty Fine Sand/Sandy Silt with gravel and cobbles, moist, petroleum odor
	-12		TB-2-1	1350	56		
	-13						
	-14						
	-15						
	-16		HS		29		Interbedded gray/brown Sandy Silt with gravel, moist and silty fine-medium sand with gravel, moist
	-17		TB-2-2	225	35		
	-18						
	-19						
	-20						
	-21		HS		37		Tan/gray Silt with sand and gravel, moist-dry
	-22		TB-2-3	110	54		
	-23						
	-24						
	-25						Tan Gravelly/Sandy Silt, moist to 26' below which is gravelly fine-medium sand and silt, moist
	-26		HS		41		
	-27		TB-2-4	8.5	54		Total Depth = 27'
	-28						
	-29						
	-30						NOTE: HS indicates a location where a PID headspace reading was recorded but no soil sample was collected
	-31						
	-32						

RECEIVED
FEB 22 2001
Dept. of Environmental Conservation
Underground Storage Tanks — FAP

0034

Alaska Complete Tank

Log of TB-1

Project	Bird Creek Texaco	Drilling Company	Alaska Complete Tank
Location	Mile 101 Seward Hwy	Date Drilled	9/15/00
Job Number	2041	Casing Elevation	Unkown
Engineer	Chris Hawe	Total Depth of Hole	31.0 Feet
Drill Rig	Mobile B-61, 8" O.D. Auger	Depth to Groundwater	Not Encountered

WELL CONSTRUCTION	DEPTH (feet)	SAMPLE LOCATIONS	SAMPLE NUMBER	PID (units)	BLOWS PER FOOT	GRAPHIC LOG	MATERIALS DESCRIPTION
Flush Mount Locking Cover	0						
2-inch Sch. 40 - PVC Casing with locking cap	-1						Brown Sand and Gravel with cobbles and silt, moist
	-2						
Saturated Bentonite Chips	-3						Pea Gravel (UST backfill), petroleum odor
	-4						
	-5						
	-6						
	-7						
	-8						
Pea Gravel	-9				6		Pea Gravel, petroleum sheen and odor
	-10		HS	1290	13		
	-11						
	-12						Pea Gravel
	-13				49		
	-14		TB-1-1	>2000	52		Brown/tan Silty Fine Sand with gravel, moist, grades into tan/brn sandy silt with gravel, moist-dry
	-15						
	-16						
	-17						
	-18				37		
2-inch Sch. 40 - 10 Slot PVC Screen	-19		TB-1-2	240	48		Silty Fine-Medium Sand with gravel to 2", moist
	-20						
	-21						
	-22						
	-23				38		Interbedded tan/brown sandy silt with gravel, moist and brown/tan silty fine-medium sand with gravel, moist
10-20 Silica Sand	-24		TB-1-3	195	62		
	-25						
	-26						
	-27						
End Cap	-28		HS	14.5	76		Tan Silt/Sandy Silt with gravel, dry-moist
	-29		HS	7.5	55		Medium-coarse sand with gravel and some silt from 28.5-29', wet, grades into a tan gravelly clay with some sand, wet
Casing caght and pulled up during install	-30				57		
	-31		TB-1-4/5	4.5	42		Total Depth = 31'
	-32						NOTE: HS indicates a location where a PID headspace reading was recorded but no soil sample was collected
	-33						
	-34						
	-35						

APPENDIX D

Soil
Sample Analytical Results

CTE Environmental Services
Alaska Division
Laboratory Data Report

Project: Bird Creek Texaco

Client: Alaska Complete Tank

CTE Work Order: 1002212

Contents:

Chain of Custody
Quality Control Summary Forms

Note:

Unless otherwise noted, all quality assurance/quality control criteria is in compliance with the proper regulatory authority and/or CTE's Quality Assurance Program Plan.

Case Narrative

Customer: AKCOMPL **Alaska Complete Tank**

Project: 1002212 **Bird Creek Texaco**

1002212001 PS

DRO - Unknown hydrocarbon with several peaks.

1002212002 PS

DRO - Unknown hydrocarbon with several peaks.

1002212003 PS

DRO - Unknown hydrocarbon with several peaks.

CHAIN OF CUSTODY RECOF 1002212

CT&E Environmental Services Inc.
Laboratory Division

ocations Nationwide
aska · Michigan
lifornia · New Jersey
olorado · Ohio
aryland · West Virginia

(1)

CLIENT: ALASKA COMPLETE TANK

CONTACT: Chris Hawe PHONE NO: (907) 345-8339

PROJECT: Birch Creek Texaco SITE:

REPORTS TO: Chris Hawe FAX NO: (907)

INVOICE TO: Chris Hawe P.O. NUMBER: 2010

CT&E Reference:

PAGE 1 OF 1

(2)

LAB NO.	SAMPLE IDENTIFICATION	DATE	TIME	MATRIX	No. CONTAINERS	SAMPLE TYPE C = COMP G = GRAB	DRO AK 102	BTEX								REMARKS
						Preservatives Used										
						Analysis Required (3)										
(1)	S1	5/11/00	1310	Soil	2	G	✓	✓								
(2)	S2	5/11/00	1325	Soil	2	G	✓	✓								
(3)	S3	5/11/00	1410	Soil	2	G	✓	✓								

(5)

Collected/Relinquished By: (1)	Date	Time	Received By:
Christyn Hawe	5/11/00	1540	
Relinquished By: (2)	Date	Time	Received By:
Relinquished By: (3)	Date	Time	Received By:
Relinquished By: (4)	Date	Time	Received For Laboratory By:
	5-11-00	1540	Sara Howell

(4)

Shipping Carrier: hand.
Shipping Ticket No: carried

Samples Received Cold? (Circle) YES NO
Temperature °C: 7.9°C - Samples just taken

Data Deliverables Required
Level I Level II Level III

Chain of Custody Seal: (Circle)
INTACT BROKEN ABSENT

Requested Turnaround Time and Special Instructions:

0038

200 W. Potter Drive **Anchorage, AK 99518** Tel: (907) 562-2343 Fax: (907) 561-5301
3180 Peger Road **Fairbanks, AK 99701** Tel: (907) 474-8656 Fax: (907) 474-9685

White - Retained by Lab (Project File) Yellow - Returned with Report Pink - Retained by Sampler

0-720

CT&E Environmental Services Inc.

SAMPLE RECEIPT FORM

1002212

CT&E WO#:

Yes	No	
	X	Are samples **RUSH**, priority, or *within 72 hrs* of **hold time**?
		If yes, have you done *e-mail notification*?
	X	Are samples *within 24 hrs* of **hold time** or **due date**?
		If yes, have you *spoken with* Supervisor?
	X	Are there any **problems** (e.g., ids, analyses)?
X		Were samples preserved correctly and pH verified?

	X	Has Project Manager been notified of problems?
	X	Is this an ACOE/AFCEE/ADEC project?
	X	Will a **data package** be required?
		If this is for PWS, provide **PWSID**.
		Is there a **quote** for this project?
	X	Will **courier** charges apply?

Completed by (sign): [signature] (print): _____

*** The following *must* be completed for *all* ACOE & AFCEE projects: ***

Yes	No		Notes:
		Is cooler temperature 4 ± C?	
		thermometer used:	
		Was there an airbill, etc? note #:	
		Was cooler sealed with custody seals?	
		#/where?	
		Were seals intact upon arrival?	
		Was there a COC with cooler?	
		Was the COC filled out properly?	
		Did the COC indicate ACOE/AFCEE project?	
		Did the COC and samples correspond?	
		Were samples screened with Geiger counter?	
		Were all samples packed to prevent breakage?	
		packing material:	
		Were all samples unbroken and clearly labelled?	
		Were all samples sealed in separate plastic bags?	
		Were all bottles for volatiles free of headspace?	
		Were correct container/sample sizes submitted?	
		Was client notified of problems? (specify below)	

Individual contacted: _____

Date & Time: _____ Phone/Fax #: _____

Due Date: 5-22-00

Received Date/Time: 5-11-00 1540

Cooler Temperature: 7.9°C - Sample was just taken.

Sample Condition: (Good) Poor

Matrix of each Sample:

2 " " ←1→-2

" "

" "

" "

Trip Blank No

MS/MSD

Additional Sample Remarks:

Yes AK101s/_____ 8260s field pres'd?

Field-filtered for dissolved_____?

Lab-filter for dissolved_____?

Ref Lab required?

Notes:

# of each Container Received:

	950 ml amber	unpres'd
	950 ml amber	w/ HCl
	500 ml amber	w/ H2SO4
	1L cubies	unpres'd
	1L cubies	w/ HNO3
	1L cubies	w/ H2SO4
	1L cubies	w/ NaOH + ZnAc
	120 ml coli	bottles
	60 ml	Nalg
3	8 oz amber	unpres'd
	4 oz amber	unpres'd
3	4 oz w/ septa	w/ MeOH
	40 ml vials	w/ HCl
	Other (specify)	
	Other (specify)	

#/Log In Proofed by: _____

0039

Form Number: F004r2
Printed: 7/12/99

CT&E Environmental Services Inc.

200 W. Potter Drive
Anchorage, AK 99518-1605
Tel: (907) 562-2343
Fax: (907) 561-5301
Web: http://www.cteesi.com

Chris Hawe
Alaska Complete Tank
2700 Huffman Rd
Anchorage, AK 995162039

Work Order:	1002212
	Bird Creek Texaco
Client:	Alaska Complete Tank
Report Date:	May 25, 2000

Enclosed are the analytical results associated with the above workorder.

As required by the state of Alaska and the USEPA, a formal Quality Assurance/Quality Control Program is maintaned by CT&E. A copy of our Quality Control Manual that outlines this program is available at your request.

Except as specifically noted, all statements and data in this report are in conformance to the provisions set forth in our Quality Assurance Program Plan.

If you have any questions regarding this report or if we can be of any other assistance, please call your CT&E Project Manager at (907) 562-2343.

The following descriptors may be found on your report which will serve to further qualify the data.

U	Indicates the analyte was analyzed for but not detected.
J	Indicates an estimated value that falls below PQL, but is greater than the MDL.
B	Indicates the analyte is found in the blank associated with the sample.
*	The analyte has exceeded allowable limits.
GT	Greater Than
D	Secondary Dilution
LT	Less Than
!	Surrogate out of range

CT&E Environmental Services Inc.

CT&E Ref.#	1002212001	**Client PO#**	
Client Name	Alaska Complete Tank	**Printed Date/Time**	05/25/2000 14:57
Project Name/#	Bird Creek Texaco	**Collected Date/Time**	05/11/2000 13:10
Client Sample ID	S1	**Received Date/Time**	05/11/2000 15:40
Matrix	Soil/Solid	**Technical Director**	**Stephen C. Ede**
Ordered By		**Released By**	Heather Hale

Sample Remarks:
DRO/RRO - Unknown hydrocarbon with several peaks.

Parameter	Results	PQL	Units	Method	Allowable Limits	Prep Date	Analysis Date	Init
SOLIDS								
Total Solids	92.2		%	SM20 2540G			05/15/00	WDW
VOLATILE FUELS DEPT								
Benzene	0.015 U	0.015	mg/Kg	BTX SW846-8021B		05/11/00	05/15/00	MAH
Toluene	0.061 U	0.061	mg/Kg	BTX SW846-8021B		05/11/00	05/15/00	MAH
Ethylbenzene	0.061 U	0.061	mg/Kg	BTX SW846-8021B		05/11/00	05/15/00	MAH
P & M -Xylene	0.061 U	0.061	mg/Kg	BTX SW846-8021B		05/11/00	05/15/00	MAH
o-Xylene	0.061 U	0.061	mg/Kg	BTX SW846-8021B		05/11/00	05/15/00	MAH
Surrogates								
1,4-Difluorobenzene <Surr>	87		%	BTX SW846-8021B	60-120	05/11/00	05/15/00	MAH
4-Bromofluorobenzene <Surr>	78.2		%	BTX SW846-8021B	50-150	05/11/00	05/15/00	MAH
SEMI VOA FUELS DEPT								
Diesel Range Organics	52.5	15.8	mg/Kg	AK102 DRO		05/21/00	05/22/00	MCM
Surrogates								
5a Androstane <surr>	101		%	AK102 DRO	60-120	05/21/00	05/22/00	MCM

CT&E Environmental Services Inc.

CT&E Ref.#	1002212002	**Client PO#**	
Client Name	Alaska Complete Tank	**Printed Date/Time**	05/25/2000 14:57
Project Name/#	Bird Creek Texaco	**Collected Date/Time**	05/11/2000 13:25
Client Sample ID	S2	**Received Date/Time**	05/11/2000 15:40
Matrix	Soil/Solid	**Technical Director**	**Stephen C. Ede**
Ordered By		**Released By**	Heather Stale

Sample Remarks:

DRO/RRO - Unknown hydrocarbon with several peaks.

Parameter	Results	PQL	Units	Method	Allowable Limits	Prep Date	Analysis Date	Init
SOLIDS								
Total Solids	92.1		%	SM20 2540G			05/15/00	WDW
VOLATILE FUELS DEPT								
Benzene	0.015 U	0.015	mg/Kg	BTX SW846-8021B		05/11/00	05/15/00	MAH
Toluene	0.060 U	0.060	mg/Kg	BTX SW846-8021B		05/11/00	05/15/00	MAH
Ethylbenzene	0.060 U	0.060	mg/Kg	BTX SW846-8021B		05/11/00	05/15/00	MAH
P & M -Xylene	0.060 U	0.060	mg/Kg	BTX SW846-8021B		05/11/00	05/15/00	MAH
o-Xylene	0.060 U	0.060	mg/Kg	BTX SW846-8021B		05/11/00	05/15/00	MAH
Surrogates								
1,4-Difluorobenzene <Surr>	87.5		%	BTX SW846-8021B	60-120	05/11/00	05/15/00	MAH
4-Bromofluorobenzene <Surr>	75.9		%	BTX SW846-8021B	50-150	05/11/00	05/15/00	MAH
SEMI VOA FUELS DEPT								
Diesel Range Organics	42.3	15.8	mg/Kg	AK102 DRO		05/21/00	05/22/00	MCM
Surrogates								
5a Androstane <surr>	85.1		%	AK102 DRO	60-120	05/21/00	05/22/00	MCM

CT&E Environmental Services Inc.

CT&E Ref.#	1002212003	**Client PO#**	
Client Name	Alaska Complete Tank	**Printed Date/Time**	05/25/2000 14:57
Project Name/#	Bird Creek Texaco	**Collected Date/Time**	05/11/2000 14:10
Client Sample ID	S3	**Received Date/Time**	05/11/2000 15:40
Matrix	Soil/Solid	**Technical Director**	**Stephen C. Ede**
Ordered By		**Released By**	Heather S Hall

Sample Remarks:

DRO/RRO - Unknown hydrocarbon with several peaks.

Parameter	Results	PQL	Units	Method	Allowable Limits	Prep Date	Analysis Date	Init
SOLIDS								
Total Solids	89.1		%	SM20 2540G			05/15/00	WDW
VOLATILE FUELS DEPT								
Benzene	0.013 U	0.013	mg/Kg	BTX SW846-8021B		05/11/00	05/15/00	MAH
Toluene	0.053 U	0.053	mg/Kg	BTX SW846-8021B		05/11/00	05/15/00	MAH
Ethylbenzene	0.053 U	0.053	mg/Kg	BTX SW846-8021B		05/11/00	05/15/00	MAH
P & M -Xylene	0.053 U	0.053	mg/Kg	BTX SW846-8021B		05/11/00	05/15/00	MAH
o-Xylene	0.053 U	0.053	mg/Kg	BTX SW846-8021B		05/11/00	05/15/00	MAH
Surrogates								
1,4-Difluorobenzene <Surr>	90.8		%	BTX SW846-8021B	60-120	05/11/00	05/15/00	MAH
4-Bromofluorobenzene <Surr>	74.3		%	BTX SW846-8021B	50-150	05/11/00	05/15/00	MAH
SEMI VOA FUELS DEPT								
Diesel Range Organics	98.0	16.6	mg/Kg	AK102 DRO		05/21/00	05/22/00	MCM
Surrogates								
5a Androstane <surr>	109		%	AK102 DRO	60-120	05/21/00	05/22/00	MCM

CT&E Environmental Services Inc.

CT&E Ref.#	302759	Method Blank	**Printed Date/Time**	05/25/2000 14:58
Client Name	Alaska Complete Tank		**Prep Batch**	
Project Name/#	Bird Creek Texaco		**Method**	
Matrix	Soil/Solid		**Date**	

QC results affect the following production samples:
1002212001, 1002212002, 1002212003

Parameter	Results	PQL	Units	Analysis Date	Init
SOLIDS					
Total Solids	100		%	05/15/2000	WDW
Batch SPT 3235					
Method SM20 2540G					
Instrument					

CT&E Environmental Services Inc.

CT&E Ref.#	302760 Duplicate	**Printed Date/Time**	05/25/2000 14:58
Client Name	Alaska Complete Tank	**Prep Batch**	
Project Name/#	Bird Creek Texaco	**Method**	
Original	1002212001	**Date**	
Matrix	Soil/Solid		

QC results affect the following production samples:
1002212001, 1002212002, 1002212003

Parameter	Original Result	QC Result	RPD	RPD Limits	Analysis Date	Init
SOLIDS						
Total Solids	92.2	92.5	0.37		05/15/2000	WDW
Batch SPT 3235						
Method SM20 2540G						
Instrument						

CT&E Environmental Services Inc.

CT&E Ref.#	302582	Method Blank	**Printed Date/Time**	05/25/2000 14:58	
Client Name	Alaska Complete Tank		**Prep Batch**	VXX	6312
Project Name/#	Bird Creek Texaco		**Method**		
Matrix	Soil/Solid		**Date**		

QC results affect the following production samples:
1002212001, 1002212002, 1002212003

Parameter	Results	PQL	Units	Analysis Date	Init
VOLATILE FUELS DEPT					
Gasoline Range Organics	0.184 J	2.50	mg/Kg	05/14/2000	MAH
Benzene	0.0125 U	0.0125	mg/Kg	05/14/2000	MAH
Toluene	0.0500 U	0.0500	mg/Kg	05/14/2000	MAH
Ethylbenzene	0.0500 U	0.0500	mg/Kg	05/14/2000	MAH
P & M -Xylene	0.0500 U	0.0500	mg/Kg	05/14/2000	MAH
o-Xylene	0.0500 U	0.0500	mg/Kg	05/14/2000	MAH

Batch VFC 4120
Method AK101/8021B
Instrument HP 5890 Series II PID+FID VCA

CT&E Environmental Services Inc.

CT&E Ref.#	302583 Lab Control Sample 302584 Lab Control Sample Duplicate	**Printed Date/Time**	05/25/2000 14:58
		Prep Batch	VXX 6312
Client Name	Alaska Complete Tank	**Method**	
Project Name/#	Bird Creek Texaco	**Date**	
Matrix	Soil/Solid		

QC results affect the following production samples:
1002212001, 1002212002, 1002212003

Parameter		QC Results	Pct Recov	LCS/LCSD Limits	RPD	RPD Limits	Spiked Amount	Analysis Date	Init
o-Xylene	LCS	0.890	99	(80-120)			0.898 mg/Kg	05/14/2000	MAH
	LCSD	0.900	100		1	(< 25)	0.898 mg/Kg	05/14/2000	MAH
Benzene	LCS	1.00	98	(80-120)			1.02 mg/Kg	05/14/2000	MAH
	LCSD	1.01	99		1	(< 25)	1.02 mg/Kg	05/14/2000	MAH
Ethylbenzene	LCS	0.693	110	(80-120)			0.632 mg/Kg	05/14/2000	MAH
	LCSD	0.698	111		1	(< 25)	0.632 mg/Kg	05/14/2000	MAH
Gasoline Range Organics	LCS	25.1	112	(60-120)			22.5 mg/Kg	05/14/2000	MAH
	LCSD	24.6	110		2	(< 20)	22.5 mg/Kg	05/14/2000	MAH
P & M -Xylene	LCS	2.39	103	(80-120)			2.31 mg/Kg	05/14/2000	MAH
	LCSD	2.41	104		1	(< 25)	2.31 mg/Kg	05/14/2000	MAH
Toluene	LCS	3.87	91	(80-120)			4.23 mg/Kg	05/14/2000	MAH
	LCSD	3.90	92		1	(< 25)	4.23 mg/Kg	05/14/2000	MAH

Batch VFC 4120
Method AK101/8021B
Instrument HP 5890 Series II PID+FID VCA

CT&E Environmental Services Inc.

CT&E Ref.#	304011	Method Blank	**Printed Date/Time**	05/25/2000 14:58	
Client Name	Alaska Complete Tank		**Prep Batch**	XXX	6851
Project Name/#	Bird Creek Texaco		**Method**		
Matrix	Soil/Solid		**Date**	05/21/2000	

QC results affect the following production samples:
1002212001, 1002212002, 1002212003

Parameter	Results	PQL	Units	Analysis Date	Init
SEMI VOA FUELS DEPT					
Diesel Range Organics	14.8 U	14.8	mg/Kg	05/21/2000	MCM
Residual Range Organics GC	24.4 U	24.4	mg/Kg	05/21/2000	MCM

Batch XFC 4631
Method AK102/103
Instrument HP 5890 Series II FID SV C F

CT&E Ref.#	304012 Lab Control Sample 304013 Lab Control Sample Duplicate	**Printed Date/Time**	05/25/2000 14:58
		Prep Batch	XXX 6851
Client Name	Alaska Complete Tank	**Method**	
Project Name/#	Bird Creek Texaco	**Date**	05/21/2000
Matrix	Soil/Solid		

QC results affect the following production samples:
1002212001, 1002212002, 1002212003

Parameter		QC Results	Pct Recov	LCS/LCSD Limits	RPD	RPD Limits	Spiked Amount	Analysis Date	Init
Residual Range Organics GC	LCS	293	88	(60-120)			331 mg/Kg	05/21/2000	MCM
	LCSD	311	95		7	(< 20)	328 mg/Kg	05/21/2000	MCM
Diesel Range Organics	LCS	326	99	(75-125)			331 mg/Kg	05/21/2000	MCM
	LCSD	331	101		3	(< 20)	328 mg/Kg	05/21/2000	MCM

Batch XFC 4631
Method AK102/103
Instrument HP 5890 Series II FID SV C F

CTE Environmental Services
Alaska Division
Laboratory Data Report

Project: Bird Creek Texaco

Client: Alaska Complete Tank

CTE Work Order: 1005615

Contents:

Chain of Custody
Quality Control Summary Forms

Note:

Unless otherwise noted, all quality assurance/quality control criteria is in compliance with the proper regulatory authority and/or CTE's Quality Assurance Program Plan.

Case Narrative

Customer: AKCOMPL **Alaska Complete Tank**

Project: 1005615 **Bird Creek Texaco**

1005615001 PS

GRO/BTEX - Surrogate recovery is biased high due to matrix interference. Results not affected.
DRO - Surrogate recovery is outside controls due to matrix interference and/or sample dilution.
DRO - Pattern consistent with weathered middle distillate.
DRO - Pattern consistent with weathered gasoline.

1005615006 PS

GRO/BTEX - Surrogate recovery is biased high due to matrix interference. Results not affected.
DRO - Pattern consistent with weathered middle distillate.

331727 LCS

DRO LCS/LCSD - Surrogate is biased high due to interference by method required petroleum spike.

331728 LCSD

DRO LCS/LCSD - Surrogate is biased high due to interference by method required petroleum spike.

CHAIN OF CUSTODY RECORD

1005615

CT&E Environmental Services Inc.
Laboratory Division

an
rsey
irginia

(1)

CLIENT: Alaska Complete Tank

CONTACT: Chris Howe PHONE NO: ( ) 345-8339

PROJECT: Birch Creek Texaco SITE:

REPORTS TO: Chris Howe FAX NO: ( ) 345-8370

INVOICE TO: Chris Howe P.O. NUMBER: 2041

CT&E Reference:

PAGE 1 OF 1

(2)

LAB NO.	SAMPLE IDENTIFICATION	DATE	TIME	MATRIX	No. CONTAINERS	SAMPLE TYPE C = COMP G = GRAB	AK101/BTEX	AK102								REMARKS
Preservatives Used																
Analysis Required (3)																
1	TB-1-1	9/15/00	1130	SOIL	2	G	✓	✓								
2	TB-1-2	9/15/00	1230	"	"	"	✓	✓								
3	TB-1-3	9/15/00	1310	"	"	"	✓	✓								
4	TB-1-4	9/15/00	1430	"	"	"	✓	✓								
5	TB-1-5	9/15/00	1450	"	"	"	✓	✓								
6	TB-2-1	9/16/00	1005	"	"	"	✓	✓								
7	TB-2-2	9/16/00	1050	"	"	"	✓	✓								
8	TB-2-3	9/16/00	1125	"	"	"	✓	✓								
9	TB-2-4	9/16/00	1200	"	"	"	✓	✓								
10	TRIP BLANK						✓									

(5)

Collected/Relinquished By: (1)	Date	Time	Received By:
Christopher Howe	9/18/00	1145	
Relinquished By: (2)	Date	Time	Received By:
Relinquished By: (3)	Date	Time	Received By:
Relinquished By: (4)	Date	Time	Received For Laboratory By:
	9/18/00	1145	

(4)

Shipping Carrier:

Shipping Ticket No:

Samples Received Cold? (Circle) YES NO

Temperature °C: 17°C

Data Deliverables Required

Level I Level II Level III

Chain of Custody Seal: (Circle)

INTACT BROKEN ABSENT

Requested Turnaround Time and Special Instructions:

0052

200 W. Potter Drive Anchorage, AK 99518 Tel: (907) 562-2343 Fax: (907) 561-5301
3180 Peger Road Fairbanks, AK 99701 Tel: (907) 474-8656 Fax: (907) 474-9685

White - Retained by Lab (Project File) Yellow - Returned with Report Pink - Retained by Sampler

0-720

1005615 **1005615**

CT&E Environmental Services Inc.

SAMPLE RECEIPT FORM

01 WO#:

Yes	No	
	✓	Are samples **RUSH**, priority, or *within 72 hrs* of **hold time**?
		If yes, have you done *e-mail notification*?
	✓	Are samples *within 24 hrs* of **hold time** or **due date**?
		If yes, have you *spoken with* Supervisor?
		Are there any **problems** (e.g., ids, analyses)?
	✓	Were samples preserved correctly and pH verified?
✓		

		Has Project Manager been notified of problems?
	✓	Is this an ACOE/AFCEE/ADEC project?
	✓	Will a **data package** be required?
		If this is for PWS, provide **PWSID**.
		Is there a **quote** for this project?
	✓	Will **courier** charges apply?

Completed by (sign): EM (print): EVA Mueller

*** The following *must* be completed for *all* ACOE & AFCEE projects: ***

Yes	No		Notes:
		Is cooler temperature 4 ± C?	
		thermometer used:	
		Was there an airbill, etc? note #:	
		Was cooler sealed with custody seals?	
		#/where?	
		Were seals intact upon arrival?	
		Was there a COC with cooler?	
		Was the COC filled out properly?	
		Did the COC indicate ACOE/AFCEE project?	
		Did the COC and samples correspond?	
		Were samples screened with Geiger counter?	
		Were all samples packed to prevent breakage?	
		packing material:	
		Were all samples unbroken and clearly labelled?	
		Were all samples sealed in separate plastic bags?	
		Were all bottles for volatiles free of headspace?	
		Were correct container/sample sizes submitted?	
		Was client notified of problems? (specify below)	

Individual contacted:

Date & Time: Phone/Fax #:

Due Date: 9/25/00

Received Date/Time: 9/18 - 11:45

Cooler Temperature: 17 °C

Sample Condition: Good / Poor

Matrix of each Sample:

2 " "

" "

" "

" "

Trip Blank

MS/MSD

Additional Sample Remarks:

AK101s/ 8260s field pres'd?

Field-filtered for dissolved ?

Lab-filter for dissolved ?

Ref Lab required?

Notes:

no TB received

Chris left TB in refrig. He will drop it off tomorrow. 9-18-00

# of each Container Received:

	950 ml amber	unpres'd
	950 ml amber	w/ HCl
	500 ml amber	w/ H2SO4
	1L cubies	unpres'd
	1L cubies	w/ HNO3
	1L cubies	w/ H2SO4
	1L cubies	w/ NaOH + ZnAc
	120 ml coli	bottles
	60 ml	Nalg
9	8 oz amber	unpres'd
	4 oz amber	unpres'd
9	4 oz w/ septa	w/ MeOH
	40 ml vials	w/ HCl
	Other (specify)	
	Other (specify)	

#/Log In Proofed by:

Form Number: F004r2
Printed: 7/12/99

0053

CT&E Environmental Services Inc.
Laboratory Division

Laboratory Analysis Report

200 W. Potter Drive
Anchorage, AK 99518-1605
Tel: (907) 562-2343
Fax: (907) 561-5301
Web: http://www.cteesi.com

Chris Hawe
Alaska Complete Tank
2700 Huffman Rd
Anchorage, AK 995162039

Work Order:	1005615
	Bird Creek Texaco
Client:	Alaska Complete Tank
Report Date:	October 11, 2000

Enclosed are the analytical results associated with the above workorder.

As required by the state of Alaska and the USEPA, a formal Quality Assurance/Quality Control Program is maintaned by CT&E. A copy of our Quality Control Manual that outlines this program is available at your request.

Except as specifically noted, all statements and data in this report are in conformance to the provisions set forth in our Quality Assurance Program Plan.

If you have any questions regarding this report or if we can be of any other assistance, please call your CT&E Project Manager at (907) 562-2343.

The following descriptors may be found on your report which will serve to further qualify the data.

U	Indicates the analyte was analyzed for but not detected.
J	Indicates an estimated value that falls below PQL, but is greater than the MDL.
B	Indicates the analyte is found in the blank associated with the sample.
*	The analyte has exceeded allowable limits.
GT	Greater Than
D	Secondary Dilution
LT	Less Than
!	Surrogate out of range

CT&E Environmental Services Inc.

CT&E Ref.#	1005615001	**Client PO#**	
Client Name	Alaska Complete Tank	**Printed Date/Time**	10/11/2000 15:13
Project Name/#	Bird Creek Texaco	**Collected Date/Time**	09/15/2000 11:30
Client Sample ID	TB-1-1	**Received Date/Time**	09/18/2000 11:45
Matrix	Soil/Solid	**Technical Director**	**Stephen C. Ede**
Ordered By		**Released By**	J Wendlebank

Sample Remarks:

GRO/BTEX - Surrogate recovery is biased high due to matrix interference. Results not affected.
DRO/RRO - Surrogate recoveries outside controls due to matrix interference and/or sample dilution.
DRO - Pattern consistent with weathered middle distillate.
DRO - Pattern consistent with weathered gasoline.

Parameter	Results		PQL	Units	Method	Allowable Limits	Prep Date	Analysis Date	Init
Solids									
Total Solids	92.8			%	SM20 2540G			09/20/00	JCO
Volatile Fuels Department									
Gasoline Range Organics	2900		172	mg/Kg	AK101/8021B		09/15/00	09/24/00	MAH
Benzene	8.45		0.858	mg/Kg	AK101/8021B		09/15/00	09/24/00	MAH
Toluene	153		3.43	mg/Kg	AK101/8021B		09/15/00	09/24/00	MAH
Ethylbenzene	62.1		3.43	mg/Kg	AK101/8021B		09/15/00	09/24/00	MAH
P & M -Xylene	273		3.43	mg/Kg	AK101/8021B		09/15/00	09/24/00	MAH
o-Xylene	115		3.43	mg/Kg	AK101/8021B		09/15/00	09/24/00	MAH
Surrogates									
1,4-Difluorobenzene <Surr>	120			%	AK101/8021B	60-120	09/15/00	09/24/00	MAH
4-Bromofluorobenzene <Surr>	9380	!		%	AK101/8021B	50-150	09/15/00	09/24/00	MAH
Semivolatile Organic Fuels Department									
Diesel Range Organics	5180		106	mg/Kg	AK102 DRO		09/20/00	10/10/00	MCM
Surrogates									
5a Androstane <surr>	181	!		%	AK102 DRO	50-150	09/20/00	10/10/00	MCM

F-781

CT&E Environmental Services Inc.

CT&E Ref.#	1005615002	**Client PO#**	
Client Name	Alaska Complete Tank	**Printed Date/Time**	10/11/2000 15:13
Project Name/#	Bird Creek Texaco	**Collected Date/Time**	09/15/2000 12:30
Client Sample ID	TB-1-2	**Received Date/Time**	09/18/2000 11:45
Matrix	Soil/Solid	**Technical Director**	**Stephen C. Ede**
Ordered By		**Released By**	J Windebank

Sample Remarks:

Parameter	Results	PQL	Units	Method	Allowable Limits	Prep Date	Analysis Date	Init
Solids								
Total Solids	93.3		%	SM20 2540G			09/20/00	JCO
Volatile Fuels Department								
Gasoline Range Organics	24.8	2.63	mg/Kg	AK101/8021B		09/15/00	09/23/00	MAH
Benzene	1.27	0.0131	mg/Kg	AK101/8021B		09/15/00	09/23/00	MAH
Toluene	5.32	0.0525	mg/Kg	AK101/8021B		09/15/00	09/23/00	MAH
Ethylbenzene	0.480	0.0525	mg/Kg	AK101/8021B		09/15/00	09/23/00	MAH
P & M -Xylene	2.44	0.0525	mg/Kg	AK101/8021B		09/15/00	09/23/00	MAH
o-Xylene	1.18	0.0525	mg/Kg	AK101/8021B		09/15/00	09/23/00	MAH
Surrogates								
1,4-Difluorobenzene <Surr>	97.5		%	AK101/8021B	60-120	09/15/00	09/23/00	MAH
4-Bromofluorobenzene <Surr>	93		%	AK101/8021B	50-150	09/15/00	09/23/00	MAH
Semivolatile Organic Fuels Department								
Diesel Range Organics	10.6 U	10.6	mg/Kg	AK102 DRO		09/20/00	09/26/00	MCM
Surrogates								
5a Androstane <surr>	78.6		%	AK102 DRO	50-150	09/20/00	09/26/00	MCM

CT&E Environmental Services Inc.

CT&E Ref.#	1005615003	**Client PO#**	
Client Name	Alaska Complete Tank	**Printed Date/Time**	10/11/2000 15:13
Project Name/#	Bird Creek Texaco	**Collected Date/Time**	09/15/2000 13:10
Client Sample ID	TB-1-3	**Received Date/Time**	09/18/2000 11:45
Matrix	Soil/Solid	**Technical Director**	**Stephen C. Ede**
Ordered By		**Released By**	J Windebank

Sample Remarks:

Parameter	Results	PQL	Units	Method	Allowable Limits	Prep Date	Analysis Date	Init
Solids								
Total Solids	94.0		%	SM20 2540G			09/20/00	JCO
Volatile Fuels Department								
Gasoline Range Organics	17.2	3.95	mg/Kg	AK101/8021B		09/15/00	09/23/00	MAH
Benzene	1.39	0.0198	mg/Kg	AK101/8021B		09/15/00	09/23/00	MAH
Toluene	4.30	0.0790	mg/Kg	AK101/8021B		09/15/00	09/23/00	MAH
Ethylbenzene	0.290	0.0790	mg/Kg	AK101/8021B		09/15/00	09/23/00	MAH
P & M -Xylene	0.715	0.0790	mg/Kg	AK101/8021B		09/15/00	09/23/00	MAH
o-Xylene	0.815	0.0790	mg/Kg	AK101/8021B		09/15/00	09/23/00	MAH
Surrogates								
1,4-Difluorobenzene <Surr>	99		%	AK101/8021B	60-120	09/15/00	09/23/00	MAH
4-Bromofluorobenzene <Surr>	93.6		%	AK101/8021B	50-150	09/15/00	09/23/00	MAH
Semivolatile Organic Fuels Department								
Diesel Range Organics	10.6 U	10.6	mg/Kg	AK102 DRO		09/20/00	09/26/00	MCM
Surrogates								
5a Androstane <surr>	75.9		%	AK102 DRO	50-150	09/20/00	09/26/00	MCM

CT&E Environmental Services Inc.

CT&E Ref.#	1005615004	**Client PO#**	
Client Name	Alaska Complete Tank	**Printed Date/Time**	10/11/2000 15:13
Project Name/#	Bird Creek Texaco	**Collected Date/Time**	09/15/2000 14:30
Client Sample ID	TB-1-4	**Received Date/Time**	09/18/2000 11:45
Matrix	Soil/Solid	**Technical Director**	**Stephen C. Ede**
Ordered By		**Released By**	J Windebank

Sample Remarks:

Parameter	Results	PQL	Units	Method	Allowable Limits	Prep Date	Analysis Date	Init
Solids								
Total Solids	92.4		%	SM20 2540G			09/20/00	JCO
Volatile Fuels Department								
Gasoline Range Organics	2.91 U	2.91	mg/Kg	AK101/8021B		09/15/00	09/23/00	MAH
Benzene	0.0370	0.0146	mg/Kg	AK101/8021B		09/15/00	09/23/00	MAH
Toluene	0.107	0.0582	mg/Kg	AK101/8021B		09/15/00	09/23/00	MAH
Ethylbenzene	0.0582 U	0.0582	mg/Kg	AK101/8021B		09/15/00	09/23/00	MAH
P & M -Xylene	0.0582 U	0.0582	mg/Kg	AK101/8021B		09/15/00	09/23/00	MAH
o-Xylene	0.0582 U	0.0582	mg/Kg	AK101/8021B		09/15/00	09/23/00	MAH
Surrogates								
1,4-Difluorobenzene <Surr>	93.9		%	AK101/8021B	60-120	09/15/00	09/23/00	MAH
4-Bromofluorobenzene <Surr>	76.6		%	AK101/8021B	50-150	09/15/00	09/23/00	MAH
Semivolatile Organic Fuels Department								
Diesel Range Organics	10.8 U	10.8	mg/Kg	AK102 DRO		09/20/00	09/26/00	MCM
Surrogates								
5a Androstane <surr>	62.3		%	AK102 DRO	50-150	09/20/00	09/26/00	MCM

CT&E Environmental Services Inc.

CT&E Ref.#	1005615005	**Client PO#**	
Client Name	Alaska Complete Tank	**Printed Date/Time**	10/11/2000 15:13
Project Name/#	Bird Creek Texaco	**Collected Date/Time**	09/15/2000 14:50
Client Sample ID	TB-1-5	**Received Date/Time**	09/18/2000 11:45
Matrix	Soil/Solid	**Technical Director**	**Stephen C. Ede**
Ordered By		**Released By**	J Windebank

Sample Remarks:

Parameter	Results	PQL	Units	Method	Allowable Limits	Prep Date	Analysis Date	Init
Solids								
Total Solids	93.2		%	SM20 2540G			09/20/00	JCO
Volatile Fuels Department								
Gasoline Range Organics	2.93 U	2.93	mg/Kg	AK101/8021B		09/15/00	09/23/00	MAH
Benzene	0.0497	0.0146	mg/Kg	AK101/8021B		09/15/00	09/23/00	MAH
Toluene	0.136	0.0586	mg/Kg	AK101/8021B		09/15/00	09/23/00	MAH
Ethylbenzene	0.0586 U	0.0586	mg/Kg	AK101/8021B		09/15/00	09/23/00	MAH
P & M -Xylene	0.0587	0.0586	mg/Kg	AK101/8021B		09/15/00	09/23/00	MAH
o-Xylene	0.0586 U	0.0586	mg/Kg	AK101/8021B		09/15/00	09/23/00	MAH
Surrogates								
1,4-Difluorobenzene <Surr>	93.6		%	AK101/8021B	60-120	09/15/00	09/23/00	MAH
4-Bromofluorobenzene <Surr>	77		%	AK101/8021B	50-150	09/15/00	09/23/00	MAH
Semivolatile Organic Fuels Department								
Diesel Range Organics	10.5 U	10.5	mg/Kg	AK102 DRO		09/20/00	09/26/00	MCM
Surrogates								
5a Androstane <surr>	58.1		%	AK102 DRO	50-150	09/20/00	09/26/00	MCM

CT&E Environmental Services Inc.

CT&E Ref.#	1005615006	**Client PO#**	
Client Name	Alaska Complete Tank	**Printed Date/Time**	10/11/2000 15:13
Project Name/#	Bird Creek Texaco	**Collected Date/Time**	09/16/2000 10:05
Client Sample ID	TB-2-1	**Received Date/Time**	09/18/2000 11:45
Matrix	Soil/Solid	**Technical Director**	**Stephen C. Ede**
Ordered By		**Released By**	JWindebank

Sample Remarks:

GRO/BTEX - Surrogate recovery is biased high due to matrix interference. Results not affected.
DRO - Pattern consistent with weathered middle distillate.

Parameter	Results		PQL	Units	Method	Allowable Limits	Prep Date	Analysis Date	Init
Solids									
Total Solids	91.4			%	SM20 2540G			09/20/00	JCO
Volatile Fuels Department									
Gasoline Range Organics	516		30.2	mg/Kg	AK101/8021B		09/16/00	09/24/00	MAH
Benzene	1.47		0.151	mg/Kg	AK101/8021B		09/16/00	09/24/00	MAH
Toluene	13.9		0.604	mg/Kg	AK101/8021B		09/16/00	09/24/00	MAH
Ethylbenzene	7.38		0.604	mg/Kg	AK101/8021B		09/16/00	09/24/00	MAH
P & M -Xylene	42.3		0.604	mg/Kg	AK101/8021B		09/16/00	09/24/00	MAH
o-Xylene	20.5		0.604	mg/Kg	AK101/8021B		09/16/00	09/24/00	MAH
Surrogates									
1,4-Difluorobenzene <Surr>	113			%	AK101/8021B	60-120	09/16/00	09/24/00	MAH
4-Bromofluorobenzene <Surr>	2820	!		%	AK101/8021B	50-150	09/16/00	09/24/00	MAH
Semivolatile Organic Fuels Department									
Diesel Range Organics	246		10.7	mg/Kg	AK102 DRO		09/20/00	09/26/00	MCM
Surrogates									
5a Androstane <surr>	87.6			%	AK102 DRO	50-150	09/20/00	09/26/00	MCM

CT&E Environmental Services Inc.

CT&E Ref.#	1005615007	**Client PO#**	
Client Name	Alaska Complete Tank	**Printed Date/Time**	10/11/2000 15:13
Project Name/#	Bird Creek Texaco	**Collected Date/Time**	09/16/2000 10:50
Client Sample ID	TB-2-2	**Received Date/Time**	09/18/2000 11:45
Matrix	Soil/Solid	**Technical Director**	**Stephen C. Ede**
Ordered By		**Released By**	J Windebank

Sample Remarks:

Parameter	Results	PQL	Units	Method	Allowable Limits	Prep Date	Analysis Date	Init
Solids								
Total Solids	90.9		%	SM20 2540G			09/20/00	JCO
Volatile Fuels Department								
Gasoline Range Organics	14.8	3.00	mg/Kg	AK101/8021B		09/16/00	09/23/00	MAH
Benzene	0.918	0.0150	mg/Kg	AK101/8021B		09/16/00	09/23/00	MAH
Toluene	3.14	0.0601	mg/Kg	AK101/8021B		09/16/00	09/23/00	MAH
Ethylbenzene	0.373	0.0601	mg/Kg	AK101/8021B		09/16/00	09/23/00	MAH
P & M -Xylene	1.08	0.0601	mg/Kg	AK101/8021B		09/16/00	09/23/00	MAH
o-Xylene	0.811	0.0601	mg/Kg	AK101/8021B		09/16/00	09/23/00	MAH
Surrogates								
1,4-Difluorobenzene <Surr>	97.3		%	AK101/8021B	60-120	09/16/00	09/23/00	MAH
4-Bromofluorobenzene <Surr>	89.1		%	AK101/8021B	50-150	09/16/00	09/23/00	MAH
Semivolatile Organic Fuels Department								
Diesel Range Organics	10.6 U	10.6	mg/Kg	AK102 DRO		09/20/00	09/26/00	MCM
Surrogates								
5a Androstane <surr>	80.5		%	AK102 DRO	50-150	09/20/00	09/26/00	MCM

CT&E Environmental Services Inc.

CT&E Ref.#	1005615008	**Client PO#**	
Client Name	Alaska Complete Tank	**Printed Date/Time**	10/11/2000 15:13
Project Name/#	Bird Creek Texaco	**Collected Date/Time**	09/16/2000 11:25
Client Sample ID	TB-2-3	**Received Date/Time**	09/18/2000 11:45
Matrix	Soil/Solid	**Technical Director**	**Stephen C. Ede**
Ordered By		**Released By**	J Windebank

Sample Remarks:

Parameter	Results	PQL	Units	Method	Allowable Limits	Prep Date	Analysis Date	Init
Solids								
Total Solids	91.1		%	SM20 2540G			09/20/00	JCO
Volatile Fuels Department								
Gasoline Range Organics	6.69	2.81	mg/Kg	AK101/8021B		09/16/00	09/23/00	MAH
Benzene	1.74	0.0141	mg/Kg	AK101/8021B		09/16/00	09/23/00	MAH
Toluene	0.160	0.0562	mg/Kg	AK101/8021B		09/16/00	09/23/00	MAH
Ethylbenzene	0.280	0.0562	mg/Kg	AK101/8021B		09/16/00	09/23/00	MAH
P & M -Xylene	0.181	0.0562	mg/Kg	AK101/8021B		09/16/00	09/23/00	MAH
o-Xylene	0.469	0.0562	mg/Kg	AK101/8021B		09/16/00	09/23/00	MAH
Surrogates								
1,4-Difluorobenzene <Surr>	104		%	AK101/8021B	60-120	09/16/00	09/23/00	MAH
4-Bromofluorobenzene <Surr>	83		%	AK101/8021B	50-150	09/16/00	09/23/00	MAH
Semivolatile Organic Fuels Department								
Diesel Range Organics	10.8 U	10.8	mg/Kg	AK102 DRO		09/20/00	09/26/00	MCM
Surrogates								
5a Androstane <surr>	88		%	AK102 DRO	50-150	09/20/00	09/26/00	MCM

F-701

CT&E Environmental Services Inc.

CT&E Ref.#	1005615009	**Client PO#**	
Client Name	Alaska Complete Tank	**Printed Date/Time**	10/11/2000 15:13
Project Name/#	Bird Creek Texaco	**Collected Date/Time**	09/16/2000 12:00
Client Sample ID	TB-2-4	**Received Date/Time**	09/18/2000 11:45
Matrix	Soil/Solid	**Technical Director**	**Stephen C. Ede**
Ordered By		**Released By**	J Windebank

Sample Remarks:

Parameter	Results	PQL	Units	Method	Allowable Limits	Prep Date	Analysis Date	Init
Solids								
Total Solids	91.9		%	SM20 2540G			09/20/00	JCO
Volatile Fuels Department								
Gasoline Range Organics	2.59 U	2.59	mg/Kg	AK101/8021B		09/16/00	09/23/00	MAH
Benzene	0.319	0.0129	mg/Kg	AK101/8021B		09/16/00	09/23/00	MAH
Toluene	0.0517 U	0.0517	mg/Kg	AK101/8021B		09/16/00	09/23/00	MAH
Ethylbenzene	0.0517 U	0.0517	mg/Kg	AK101/8021B		09/16/00	09/23/00	MAH
P & M -Xylene	0.0517 U	0.0517	mg/Kg	AK101/8021B		09/16/00	09/23/00	MAH
o-Xylene	0.0517 U	0.0517	mg/Kg	AK101/8021B		09/16/00	09/23/00	MAH
Surrogates								
1,4-Difluorobenzene <Surr>	97.4		%	AK101/8021B	60-120	09/16/00	09/23/00	MAH
4-Bromofluorobenzene <Surr>	67.1		%	AK101/8021B	50-150	09/16/00	09/23/00	MAH
Semivolatile Organic Fuels Department								
Diesel Range Organics	10.7 U	10.7	mg/Kg	AK102 DRO		09/20/00	09/26/00	MCM
Surrogates								
5a Androstane <surr>	86.1		%	AK102 DRO	50-150	09/20/00	09/26/00	MCM

CT&E Environmental Services Inc.

CT&E Ref.#	1005615010	**Client PO#**	
Client Name	Alaska Complete Tank	**Printed Date/Time**	10/11/2000 15:13
Project Name/#	Bird Creek Texaco	**Collected Date/Time**	09/17/2000 0:00
Client Sample ID	Trip Blank	**Received Date/Time**	09/18/2000 11:45
Matrix	Soil/Solid	**Technical Director**	**Stephen C. Ede**
Ordered By		**Released By**	J Windebank

Sample Remarks:

Parameter	Results	PQL	Units	Method	Allowable Limits	Prep Date	Analysis Date	Init
Solids								
Total Solids	100		%	SM20 2540G			09/20/00	JCO
Volatile Fuels Department								
Gasoline Range Organics	2.53 U	2.53	mg/Kg	AK101/8021B		09/17/00	09/26/00	MAH
Benzene	0.0127 U	0.0127	mg/Kg	AK101/8021B		09/17/00	09/26/00	MAH
Toluene	0.0507 U	0.0507	mg/Kg	AK101/8021B		09/17/00	09/26/00	MAH
Ethylbenzene	0.0507 U	0.0507	mg/Kg	AK101/8021B		09/17/00	09/26/00	MAH
P & M -Xylene	0.0507 U	0.0507	mg/Kg	AK101/8021B		09/17/00	09/26/00	MAH
o-Xylene	0.0507 U	0.0507	mg/Kg	AK101/8021B		09/17/00	09/26/00	MAH
Surrogates								
1,4-Difluorobenzene <Surr>	90.9		%	AK101/8021B	60-120	09/17/00	09/26/00	MAH
4-Bromofluorobenzene <Surr>	90.8		%	AK101/8021B	50-150	09/17/00	09/26/00	MAH

F-701

CT&E Environmental Services Inc.

CT&E Ref.#	332500	Method Blank	**Printed Date/Time**	10/11/2000 15:13
Client Name	Alaska Complete Tank		**Prep**	**Batch**
Project Name/#	Bird Creek Texaco			**Method**
Matrix	Soil/Solid			**Date**

QC results affect the following production samples:

1005615001, 1005615002, 1005615003, 1005615004, 1005615005, 1005615006, 1005615007, 1005615008, 1005615009, 1005615010

Parameter	Results	PQL	Units	Analysis Date	Init
Solids					
Total Solids	99.9		%	09/20/00	JCO

Batch SPT 3557
Method SM20 2540G
Instrument

E701

CT&E Environmental Services Inc.

CT&E Ref.#	332501	Duplicate	**Printed Date/Time**	10/11/2000 15:13
Client Name	Alaska Complete Tank		**Prep**	**Batch**
Project Name/#	Bird Creek Texaco			**Method**
Original	1005615006			**Date**
Matrix	Soil/Solid			

QC results affect the following production samples:

1005615001, 1005615002, 1005615003, 1005615004, 1005615005, 1005615006, 1005615007, 1005615008, 1005615009, 1005615010

Parameter	Original Result	QC Result	RPD	RPD Limits	Analysis Date	Init
Solids						
Total Solids	91.4	91.6	0.23		09/20/00	JCO

Batch SPT 3557
Method SM20 2540G
Instrument

CT&E Environmental Services Inc.

CT&E Ref.#	332478	Method Blank	**Printed Date/Time**	10/11/2000 15:13	
Client Name	Alaska Complete Tank		**Prep** **Batch**	VXX	6934
Project Name/#	Bird Creek Texaco		**Method**		
Matrix	Soil/Solid		**Date**		

QC results affect the following production samples:

1005615001, 1005615002, 1005615003, 1005615004, 1005615005, 1005615006, 1005615007, 1005615008, 1005615009

Parameter	Results	PQL	Units	Analysis Date	Init
Volatile Fuels Department					
Gasoline Range Organics	0.368 J	2.50	mg/Kg	09/23/00	MAH
Benzene	0.0125 U	0.0125	mg/Kg	09/23/00	MAH
Toluene	0.0500 U	0.0500	mg/Kg	09/23/00	MAH
Ethylbenzene	0.0500 U	0.0500	mg/Kg	09/23/00	MAH
P & M -Xylene	0.0500 U	0.0500	mg/Kg	09/23/00	MAH
o-Xylene	0.0500 U	0.0500	mg/Kg	09/23/00	MAH

Batch VFC 4347
Method AK101/8021B
Instrument HP 5890 Series II PID+FID VDA

CT&E Ref.#	332479 Lab Control Sample 332480 Lab Control Sample Duplicate	**Printed Date/Time**	10/11/2000 15:13
		Prep Batch	VXX 6934
Client Name	Alaska Complete Tank	**Method**	
Project Name/#	Bird Creek Texaco	**Date**	
Matrix	Soil/Solid		

QC results affect the following production samples:

1005615001, 1005615002, 1005615003, 1005615004, 1005615005, 1005615006, 1005615007, 1005615008, 1005615009

Parameter		QC Results	Pct Recov	LCS/LCSD Limits	RPD	RPD Limits	Spiked Amount	Analysis Date	Init
Volatile Fuels Department									
Gasoline Range Organics	LCS	22.1	98	(60-120)			22.5 mg/Kg	09/23/00	MAH
	LCSD	22.3	99		1	(< 20)	22.5 mg/Kg	09/23/00	MAH
Benzene	LCS	0.787	101	(80-120)			0.78 mg/Kg	09/23/00	MAH
	LCSD	0.787	101		0	(< 25)	0.78 mg/Kg	09/23/00	MAH
Toluene	LCS	3.01	93	(80-120)			3.24 mg/Kg	09/23/00	MAH
	LCSD	3.00	93		0	(< 25)	3.24 mg/Kg	09/23/00	MAH
Ethylbenzene	LCS	0.507	101	(80-120)			0.504 mg/Kg	09/23/00	MAH
	LCSD	0.503	100		1	(< 25)	0.504 mg/Kg	09/23/00	MAH
P & M -Xylene	LCS	1.88	102	(80-120)			1.84 mg/Kg	09/23/00	MAH
	LCSD	1.87	101		1	(< 25)	1.84 mg/Kg	09/23/00	MAH
o-Xylene	LCS	0.701	108	(80-120)			0.652 mg/Kg	09/23/00	MAH
	LCSD	0.698	107		1	(< 25)	0.652 mg/Kg	09/23/00	MAH

Batch VFC 4347
Method AK101/8021B
Instrument HP 5890 Series II PID+FID VDA

F-7201

CT&E Ref.#	333432	Method Blank	**Printed Date/Time**	10/11/2000 15:13	
Client Name	Alaska Complete Tank		**Prep Batch**	VXX	6962
Project Name/#	Bird Creek Texaco		**Method**		
Matrix	Soil/Solid		**Date**		

QC results affect the following production samples:

1005615010

Parameter	Results	PQL	Units	Analysis Date	Init
Volatile Fuels Department					
Gasoline Range Organics	0.323 J	2.50	mg/Kg	09/27/00	MAH
Benzene	0.0125 U	0.0125	mg/Kg	09/27/00	MAH
Toluene	0.0500 U	0.0500	mg/Kg	09/27/00	MAH
Ethylbenzene	0.0500 U	0.0500	mg/Kg	09/27/00	MAH
P & M -Xylene	0.0500 U	0.0500	mg/Kg	09/27/00	MAH
o-Xylene	0.0500 U	0.0500	mg/Kg	09/27/00	MAH

Batch VFC 4357
Method AK101/8021B
Instrument HP 5890 Series II PID+FID VDA

CT&E Environmental Services Inc.

CT&E Ref.#	333433 Lab Control Sample	**Printed Date/Time**	10/11/2000 15:13
	333434 Lab Control Sample Duplicate	**Prep Batch**	VXX 6962
Client Name	Alaska Complete Tank	**Method**	
Project Name/#	Bird Creek Texaco	**Date**	
Matrix	Soil/Solid		

QC results affect the following production samples:

1005615010

Parameter		QC Results	Pct Recov	LCS/LCSD Limits	RPD	RPD Limits	Spiked Amount	Analysis Date	Init
Volatile Fuels Department									
Gasoline Range Organics	LCS	23.3	104	(60-120)			22.5 mg/Kg	09/27/00	MAH
	LCSD	23.0	102		2	(< 20)	22.5 mg/Kg	09/27/00	MAH
Benzene	LCS	0.809	104	(80-120)			0.78 mg/Kg	09/27/00	MAH
	LCSD	0.799	102		2	(< 25)	0.78 mg/Kg	09/27/00	MAH
Toluene	LCS	3.10	96	(80-120)			3.24 mg/Kg	09/27/00	MAH
	LCSD	3.06	94		2	(< 25)	3.24 mg/Kg	09/27/00	MAH
Ethylbenzene	LCS	0.523	104	(80-120)			0.504 mg/Kg	09/27/00	MAH
	LCSD	0.514	102		2	(< 25)	0.504 mg/Kg	09/27/00	MAH
P & M -Xylene	LCS	1.94	105	(80-120)			1.84 mg/Kg	09/27/00	MAH
	LCSD	1.91	103		2	(< 25)	1.84 mg/Kg	09/27/00	MAH
o-Xylene	LCS	0.727	112	(80-120)			0.652 mg/Kg	09/27/00	MAH
	LCSD	0.711	109		3	(< 25)	0.652 mg/Kg	09/27/00	MAH

Batch VFC 4357
Method AK101/8021B
Instrument HP 5890 Series II PID+FID VDA

F-7231

CT&E Environmental Services Inc.

CT&E Ref.#	331726	Method Blank	**Printed Date/Time**		10/11/2000 15:13
Client Name	Alaska Complete Tank		**Prep**	**Batch**	XXX 7603
Project Name/#	Bird Creek Texaco			**Method**	
Matrix	Soil/Solid			**Date**	09/20/2000

QC results affect the following production samples:

1005615001, 1005615002, 1005615003, 1005615004, 1005615005, 1005615006, 1005615007, 1005615008, 1005615009

Parameter	Results	PQL	Units	Analysis Date	Init
Semivolatile Organic Fuels Department					
Diesel Range Organics	6.83 J	10.0	mg/Kg	09/26/00	MCM
Residual Range Organics GC	16.5 U	16.5	mg/Kg	09/26/00	MCM

Batch XFC 4864
Method AK102/103
Instrument HP 5890 Series II FID SV C F

F-701

CT&E Environmental Services Inc.

CT&E Ref.#	331727 Lab Control Sample	**Printed Date/Time**	10/11/2000 15:13
	331728 Lab Control Sample Duplicate	**Prep Batch**	XXX 7603
Client Name	Alaska Complete Tank	**Method**	
Project Name/#	Bird Creek Texaco	**Date**	09/20/2000
Matrix	Soil/Solid		

QC results affect the following production samples:

1005615001, 1005615002, 1005615003, 1005615004, 1005615005, 1005615006, 1005615007, 1005615008, 1005615009

Parameter		QC Results	Pct Recov	LCS/LCSD Limits	RPD	RPD Limits	Spiked Amount	Analysis Date	Init
Semivolatile Organic Fuels Department									
Diesel Range Organics	LCS	293	88	(75-125)			333 mg/Kg	09/26/00	MCM
	LCSD	287	86		2	(< 20)	333 mg/Kg	09/26/00	MCM
Residual Range Organics GC	LCS	223	67	(60-120)			333 mg/Kg	09/26/00	MCM
	LCSD	221	66		1	(< 20)	333 mg/Kg	09/26/00	MCM

Batch XFC 4864
Method AK102/103
Instrument HP 5890 Series II FID SV C F

F-201

APPENDIX E

Soil Remediation Confirmation Letter from ASR

0074

SHORESIDE PETROLEUM, INC.

CORPORATE OFFICE
P.O. BOX 1189 700 PORT AVENUE
SEWARD, ALASKA 99664-1189
PHONE (907) 224-8040 FAX (907) 224-8047

FAX TRANSMITTAL

DATE: 2-09-01

TO: Chris Hawe
ACT
FAX #: 770-3943

FROM: Doug Lechner
FAX #: (907) 224-8047

 # OF PAGES INCLUDING THIS PAGE: 8

Let's try again, this should come through straight now. [illegible] wanted along with it, please let me know.

Thanks!

SIGNED: Doug
Shoreside Petroleum, Inc.

ASR

ALASKA SOIL RECYCLING
A Division of Anchorage Sand & Gravel Co. Inc.
1040 O'Malley Road • Anchorage, Alaska 99515
Phone (907) 349-3333 • FAX (907) 344-2844

October 15, 2000

Shoreside Petroleum, Inc.
P.O. Box 1189
Seward, Alaska 99664

Attn: Mr. Doug Lechner

Re: Soil Disposal From Bird Creek Texaco

Dear Mr. Lechner:

On September 6, 2000 Alaska Soil Recycling (ASR) received 64.67 tons of petroleum impacted soil from the above referenced site. On September 19, 2000 thermal treatment of this soil was completed at ASR's Spar Avenue facility in Anchorage, Alaska. Post remedial analysis reveals that this soil meets the Alaska Department of Environmental Conservation's most restrictive level (Level A). Attached is a copy of the analysis summary and laboratory results.

This soil will be recycled for use in the construction industry.

Please contact me with any questions.

Sincerely,

ALASKA SOIL RECYCLING

James J. Rogers
Manager

JJR:rj

Attachments

Oil Spill Consultants, Inc.

The Environmental Cleanup Company

October 5, 2000

Mr. James J. Rogers
Environmental Manager
Alaska Soil Recycling
1040 O'Malley Road
Anchorage, Alaska 99515

Subject: Laboratory Results for Third Party Sampling - Account 1966

Dear Mr. Rogers:

The results for our September 25, 2000 sampling for Account 1966 are attached. These results are summarized as follows:

Sample Identification Number	DRO-AK102 mg/kg
2000-ASR-1966-494-SL	U
2000-ASR-1966-495-SL	U
ADEC Level "A" Cleanup Criteria	100

Note: 1. U means undetected.

Please be advised that Account 1966 meets ADEC Level "A" Cleanup Criteria for DRO under Method One in 18 AAC 75.341. All samples were collected following ADEC guidelines.

Sincerely,

Randy E. Easley
President

Attachments

P.O. Box 220412 • Anchorage, Alaska 99522-0412 • (907) 562-7169 • Fax (907) 562-7225

CT&E Environmental Services Inc.
Laboratory Division

Laboratory Analysis Report

200 W. Potter Drive
Anchorage, AK 99518-1605
Tel: (907) 562-2343
Fax: (907) 561-5301
Web: http://www.cteesi.com

Randy Easley
Oil Spill Consultants, Inc.
209 E. 51st
Anchorage, AK 99503

Work Order:	1005775
	AK Soil Recycling 1966
Client:	Alaska Soil Recycling
Report Date:	October 04, 2000

Enclosed are the analytical results associated with the above workorder.

As required by the state of Alaska and the USEPA, a formal Quality Assurance/Quality Control program is maintained by CT&E. A copy of our Quality Control Manual that outlines this program is available at your request.

Except as specifically noted, all statements and data in this report are in conformance to the provisions [illegible] Quality Assurance Program Plan.

If you have any questions regarding this report or if we can be of any other assistance, please call your CT&E Project Manager at (907) 562-2343.

The following descriptors may be found on your report which will serve to further qualify the data.

U	Indicates the analyte was analyzed for but not detected.
J	Indicates an estimated value that falls below PQL, but is greater than the MDL.
B	Indicates the analyte is found in the blank associated with the sample.
*	The analyte has exceeded allowable limits.
GT	Greater Than
D	Secondary Dilution
LT	Less Than
!	Surrogate out of range

CT&E Environmental Services Inc.

0078

CT&E Ref.#	1005775001	Client PO#	105326 Proj 2000-2
Client Name	Alaska Soil Recycling	Printed Date/Time	10/04/2000 10:10
Project Name/#	AK Soil Recycling 1966	Collected Date/Time	09/25/2000 15:15
Client Sample ID	2000-ASR-1966-494-SL	Received Date/Time	09/26/2000 9:15
Matrix	Soil/Solid	Technical Director	Stephen C. Ede
Ordered By		Released By	J Windebank

Sample Remarks:

Parameter	Results	PQL	Units	Method	Allowable Limits	Prep Date	Analysis Date	Init
Solids								
Total Solids	92.8		%	SM20 2540G			09/27/00	JCO
Semivolatile Organic Fuels Department								
Diesel Range Organics	12.1 U	12.1	mg/Kg	AK102 DRO		09/27/00	10/02/00	MCM
Surrogates								
5a Androstane <surr>	93.9		%	AK102 DRO	50-150	09/27/00	10/02/00	MCM

F-781

CT&E Environmental Services Inc

CT&E Ref.#	1005775002	**Client PO#**	105326 Proj 2000-2
Client Name	Alaska Soil Recycling	**Printed Date/Time**	10/04/2000 10:10
Project Name/#	AK Soil Recycling 1966	**Collected Date/Time**	09/25/2000 15:18
Client Sample ID	2000-ASR-1966-495-SL	**Received Date/Time**	09/26/2000 9:15
Matrix	Soil/Solid	**Technical Director**	**Stephen C. Ede**
Ordered By		**Released By**	Wmolebank

Sample Remarks:

Parameter	Results	PQL	Units	Method	Allowable Limits	Prep Date	Analysis Date	Init
Solids								
Total Solids	92.1		%	SM20 2540G			09/27/00	JCO
Semivolatile Organic Fuels Department								
Diesel Range Organics	12.1 U	12.1	mg/Kg	AK102 DRO		09/27/00	10/02/00	MCM
Surrogates								
5a Androstane <surr>	78.4		%	AK102 DRO	50-150	09/27/00	10/02/00	MCM

F-731

Chain of Custody

1005775

Project: ALASKA SOIL RECYCLING
Account Number: 1916
Project No. 2000-2
Authorization Number: ASR Purchase Orde

Client:
OH Spill Consultants, Inc.
The Environmental Cleanup Company
209 E. 51st Avenue, Anchorage, Alaska 99503
Tel: (907) 562-7115 Fax: (907) 562-7225

Sampler(s): James Prator
(Signature)
Witness: Randy E. Easley
(Signature)

Analysis Required by:

Field Screen	Sample Number	Sample Date	Time	PID Reading	Type	# of Cont.	DRO-AK102	QA / QC Required
1	2000-ASR-1916-454-SL	9/25/00	315	0	GRAB	1	✓	
2	2000-ASR-1916-[illegible]-SL	9/25/00						
3	2000-ASR-1916-[illegible]-SL	9/25/00						
4	2000-ASR-1916-[illegible]-SL	9/25/00						
5	2000-ASR-1916-415-SL	9/25/00	415	0	GRAB	1	✓	

Relinquished by: Print: James Prator Date: 09/26/00 Time: 1110
Signature:
Relinquished by: Print:
Signature:
Dispatched by: (Printed)
Signature:
Method of Ship: Hand Delivered to OH Spill Consultants, Inc. truck
Comments:

Received by: (Printed)
(Signature)
Received by: (Printed)
(Signature)
Received at Laboratory by: 9/26 9:[illegible]
Condition of Containers: Good Fair Poor
Received Temp: [illegible]

Feb. 9. 2001 9:11AM No. 5998 P. 7

0080

CT&E Environmental Services Inc.

SAMPLE RECEIPT FORM

CT&E WO#: 1005775

Yes	No	
✓	✗	Are samples **RUSH**, priority, or *within 72 hrs* of hold time?
✓		If yes, have you done *e-mail notification*?
	✓	Are samples *within 24 hrs* of hold time or due date?
		If yes, have you *spoken with* Supervisor?
	✓	Are there any **problems** (e.g., ids, analyses)?
✓		Were samples preserved correctly and pH verified?

	✓	Has Project Manager been notified of problems?
	✓	Is this an ACOE/AFCEE/ADEC project?
	✓	Will a **data package** be required?
		If this is for PWS, provide **PWSID**.
		Is there a **quote** for this project?
	✓	Will **courier** charges apply?

Due Date: 9/28/07
Received Date/Time: 9/26 1915
Cooler Temperature: 3.2 °C
Sample Condition: (Good) / Poor
Matrix of each Sample: 1, 2

Completed by (sign): CM print: Cory Mueller

*** The following must be completed for all ACOE & AFCEE projects: ***

Yes	No		Notes:
		Is cooler temperature 4 ± C?	
		thermometer used:	
		Was there an airbill, etc? noted:	
		Was cooler sealed with custody seals?	
		if/where?	
		Were seals intact upon arrival?	
		Was there a COC with cooler?	
		Was the COC filled out properly?	
		Did the COC indicate ACOE/AFCEE project?	
		Did the COC and samples correspond?	
		Were samples screened with Geiger counter?	
		Were all samples packed to prevent breakage?	
		packing material:	
		Were all samples untroken and clearly labelled?	
		Were all samples sealed in separate plastic bags?	
		Were all bottles for volatiles free of head space?	
		Were correct container/sample sizes submitted?	
		Was client notified of problems? (specify below)	

Individual contacted: Phone/Fax #:
Date & Time:

Trip Blank
MS/MSD
Additional Sample Remarks
AK101s/ 8260s field pres'd?
Field-filtered for dissolved ?
Lab-filter for dissolved ?
Ref Lab required:
Notes:

# of each Container Received:

	950 ml amber	unpres'd
	950 ml amber	w/ HCl
	500 ml amber	w/ H2SO4
	1L clear	unpres'd
	1L clear	w/ HNO3
	1L clear	w/ H2SO4
	1L clear	w/ NaOH ZnAc
	120 ml vial	bottles
	60 ml	NH4
2	8 oz amber	unpres'd
	4 oz amber	unpres'd
	4 oz w/ septa	w/ MeOH
	40 ml vials	w/ HCl
	Other (specify)	
	Other (specify)	

#/Log In Probe: Cyanide

0081

Feb. 9. 2001 9:12AM No. 5992 P. 9

12/17/01

Chris Howe — Bird Creek L25.21

— 2 Stockpiles have been combined and are on adjacent property. (Bill Johnston), he moved it last Summer @ request of Shoreside. Probably within 100 ft of wells.

— Need to do RI before next Summer. mail HC52 [redacted] 8500 Bird Creek 74540

→ 653-7943 Bill Johnston Call on soils, he will hire his own Consultant. on Lot 23.

Talked w/ Bill J. 3/8/02

— Chem Track did stockpile sampling, will be submitting a report soon.

— Eric Lampkin

Shoreline HC52 [redacted] 8500A Bird Creek 74540

(25.21

ALASKA COMPLETE TANK
2700 Huffman Road
Anchorage, Alaska 99516
(907) 345-8339
FAX No. 345-8370

LETTER OF TRANSMITTAL

0083

DATE 2/12/2001	JOB NO. 2041
ATTENTION: Robert Weimer	
RE: Bird Creek Texaco	

TO ADEC
555 Cordova Street
Anchorage Alaska 99501

WE ARE SENDING YOU X Attached___Under separate cover via_____the following items:

COPIES	DATE	NO.	DESCRIPTION
1	February 12, 2001	1	Site Assessment and Release Investigation Report for Bird Creek Texaco.

THESE ARE TRANSMITTED as checked below:

___ For approval
X For your use
___ As requested
___ For review and comment

_____ Approved as submitted
_____ Approved as noted
_____ Returned for corrections

_____ Resubmit _____ copies for approval
_____ Submit _____ copies for distribution
_____ Return _____ corrected prints

REMARKS:

COPY TO FILE

SIGNED: Christyn Hanna

RECEIVED
FEB 13 2001
Dept. of Environmental Conservation
Underground Storage Tanks — FAP

If enclosures are not as noted, please notify us at once.

L2521

0084

Alaska Complete & Tank

2700 HUFFMAN ROAD
ANCHORAGE ALASKA 99516
(907) 345-8339
Toll Free 888-330-8339
Fax (907) 345-8370

March 26, 2001

Copy Sent via Facsi
Original Mailed

Robert Weimer
Environmental Specialist
UST Program
Alaska Department of Environmental Conservation
555 Cordova Street
Anchorage, Alaska 99501

RE: Request for Delay in Corrective Action
Shoreside Petroleum Bird Creek Texaco - Bird Creek, Al
ADEC Facility ID # 2715
ACT Project No. 2041

Dear Mr. Weimer:

Alaska Complete Tank (ACT) is requesting from the Alaska Department of Environmental Conservation (ADEC) approval to delay the initiation of any corrective action measures at the above referenced property. The delay is requested on behalf of Shoreside Petroleum, Inc. (SPI) due to circumstances surrounding the plans for the property, which include closure of the UST system at the site. The UST system closure is scheduled to coincide with moving the Seward Highway past the Bird Creek Station farther out onto the Turnagain Arm mud flats to create a Bird-Indian bypass. The road construction is an extension of the ongoing project of straightening the highway. Managers at Shoreside Petroleum, Inc., who have been closely following the proposed changes, indicate that the upgrades to the highway are scheduled to happen sometime in the next five years. When this does happen, SPI will be forced to close their Bird Creek Station and remove the UST system due to lack of through traffic.

We believe that the contamination at the site can be dealt with more effectively during the UST system closure, especially since diesel, which is more persistent to in-situ remediation, is one of the contaminants at the site. Better success in clean up and much more effective use of SPI resources in this effort would result from remedial action during the UST system closure. In addition, based on the distribution of

contamination detected in two borings drilled adjacent to the side of the UST which caused the release at the site, the delay of corrective action should not cause harm to the environment or threaten human health provided the following precautions are completed.

- The UST system is operated in accordance with all of 18 78 AAC regulation, including the use of properly installed and operated release detection equipment and methods.
- The gravel covered ground over the UST within the curbed area next to the building on-site is paved or covered with some other impervious layer to stop infiltration of rain water into the ground in this area.
- The on-slab concrete floor of the building remains intact and in good shape until closure.
- The pavement and concrete which covers the site elsewhere remains in-place and in good shape until closure.
- The UST system is removed and contaminated soil dealt with immediately following closure of the station.

A complete presentation of the environmental data for the two borings is included in the previously submitted *Site Assessment and Release Investigation Report for Bird Creek Texaco UST System, ACT, February 12, 2001.*

The data presented in the above mentioned report displayed that the distribution of contamination at the site continually decreased with depth until it was only marginally above the ADEC allowable level. In addition, given the planned institutional controls to remove the driving force (infiltrating water) for further contaminant migration as well as other precautions mentioned in this letter, the delay of corrective action at the Bird Creek site should not cause concern for further impact to the environment or risk to human health. Therefore, we request that the ADEC approve a delay in corrective action at the Bird Creek site until more effective remedial actions can be taken during the removal of the UST system after the Seward Highway is moved and the station is permanently closed.

Thank you for your consideration on this matter. If you have any questions regarding this request, please contact us at 770-3942.

Sincerely,

Christopher Hawe, P.E.
Director of Engineering and Environmental Services

cc: Steve Bainbridge, P.E., ADEC, SPAR - UST Program, NDO
Doug Lechner, SPI

625.21
0086

ALASKA COMPLETE TANK

2700 Huffman Road
Anchorage, Alaska 99516
(907) 345-8339 Fax (907) 345-8370

September 27, 2000

Sent via Facsimile to 269-7507

Robert Weimer
Environmental Specialist
UST Program
Alaska Department of Environmental Conservation
555 Cordova Street
Anchorage, Alaska 99501

RE: Request for approval to dispose of contaminated soil
Shoreside Petroleum Bird Creek Texaco - Bird Creek, Alaska
ADEC Facility ID # 2715
ACT Project No. 2041

Dear Mr. Weimer:

Alaska Complete Tank (ACT) is requesting approval from ADEC to transport diesel and gasoline contaminated soil to Alaska Soil Recycling (ASR) located at 2300 Spar Avenue, Anchorage, Alaska, for thermal remediation and disposal. ASR confirmation analytical testing will be for DRO, GRO, and BTEX. The contaminated soil to be treated is contained in three 55-gallon drums of contaminated soil generated during drilling of test borings at the site.

Please indicate your approval of this treatment method by signing below and faxing it back to us at 345-8370.

_____ Date 9/27/00

Thank you for your assistance on this matter. If you have any questions regarding this request, please contact me at 770-3942.

Sincerely,

Christopher Hawe, P.E.
Director of Engineering and Environmental

Post-it® Fax Note 7671	Date 9/27/00	# of pages ▶
To Chris Hawe	From R. Weimer	
Co./Dept. ACT	Co. ADEC	
Phone # 345-8339	Phone # 269-7525	
Fax # 345-8370	Fax # 269-7507	

cc: Ron Johnson, ASR

STATE OF ALASKA

TONY KNOWLES, GOVERNOR

DEPT. OF ENVIRONMENTAL CONSERVATION
DIVISION OF SPILL PREVENTION AND RESPONSE
STORAGE TANK PROGRAM

555 Cordova Street
Anchorage, AK 99501
PHONE: (907) 269-7504
FAX:(907)269-7507
http://www.state.ak.us/dec/home.htm

October 24, 2001

Mr. Doug Lechner
Shoreside Petroleum
PO Box 1189
Seward, AK 99664

RE: Request for a release investigation work plan, area well search, corrective action plan, and information for the Bird Creek Texaco Facility, Mile 101 Seward Highway site.
Spill #: 95210016701, File #: L25.21, Fac ID #: 2715

Dear Mr. Lechner:

Thank you for submitting the Site Assessment and Release Investigation Report, dated February 12, 2001, for the work conducted by Alaska Complete Tank at the above referenced site during May and September of 2000. The report documented that high levels of petroleum contamination remain, that extends to depths of more than 30 feet below ground surface, in the vicinity of 12,000 gallon three compartment underground storage tank.

The Department requests that you submit, by December 1, 2001, a release investigation work plan, including a schedule for conducting the work, for defining the extent and amount of soil, and possible ground water contamination at the site. The Department requests that this include a soil assessment to the west, east, and south of the tank. The Department also requests that you conduct and submit, by December 1, 2001, the results of a well search for at least a quarter of a mile radius of the tank.

The Department is also in receipt of your March 26, 2001 request for Delay in Corrective Action. I have contacted Alaska DOT and they have stated that any such road bypass in the area would not occur until 2006 at the earliest. Such a lengthy delay for conducting the required corrective action at this site in not acceptable. The Department requests that you submit, by February 1, 2002, a corrective action plan, including a schedule for conducting the work, for this site.

The Department is also requesting that you provide information regarding the two stockpiles of contaminated soil that were generated during the removal, on May 1995, of the former 6,000 gallon and 12,000 gallon gasoline tank systems. The Department requests that you provide, by November 5, 2001, a site map showing the location of the stockpiles including all water wells, and surface waters within 200 feet, and documentation of the current type and condition of cover and liners for these stockpiles, and provide a corrective action plan or a confirmation sampling plan, including a schedule for conducting the work, for these stockpiles.

Cost Recovery

The State considers you a responsible party (RP) and will cost recover all "oversight" costs for necessary work to close out the site. Cost recovery will be initiated once oversight expenses reach a $1,000 threshold. Soon after, the RP will be sent a letter from the Department of Law along with a detailed invoice of oversight costs and associated activities.

"Oversight" costs can include department staff salaries, travel, equipment, supplies, contracts and services, and general program management. Typical cost expenditures for staff time can include, but are not limited to: performing plan reviews; drafting approval letters; attending site meetings; offering technical assistance via phone; and doing site visits or inspections.

The State of Alaska is authorized, under Federal regulation 42 U.S.C. 699 1 b(h), to recover funds used during oversight of a petroleum cleanup from a leaking underground storage tank. The State is also authorized by Alaska Statute 46.08.070 to recover money expended by the department to contain or cleanup the release of oil or a hazardous substance, including petroleum.

If you have any questions about cost recovery or would like to later request a tally of oversight activities recorded for your site to see if you are close to the $1,000 threshold, please contact Cynthia Pring-Ham (907) 465-5301.

The Department looks forward to the timely and cost-effective completion of the assessment and clean up of this site. Please contact me at 269-7525 if you, or your consultant have any questions regarding this letter.

Sincerely,

Robert Weimer

Robert Weimer
ADEC Site Project Manager

cc: Christopher Hawe, Alaska Complete Tank

Alaska Complete & Tank

2700 HUFFMAN ROAD
ANCHORAGE ALASKA 99516
(907) 345-8339
Toll Free 888-330-8339
Fax (907) 345-8370
www.alaskacomplete.com

December 10, 2001

Sent Via Facsimile to 269-7507

Robert Weimer
Environmental Specialist
UST Program
Alaska Department of Environmental Conservation
555 Cordova Street
Anchorage, Alaska 99501

RE: Release Investigation Work Plan
Bird Creek Texaco UST System, Mile 101 Seward Highway., Indian, Alaska
Spill #: 95210016701, File #: L25.21, Facility ID #: 2715
ACT Project No. 2041

Dear Mr. Weimer:

On behalf of Doug Lechner of Shoreside Petroleum, Inc. (SPI), Alaska Complete Tank (ACT) is addressing your request for a work plan to investigate the petroleum release at the Bird Creek Texaco site outlined in a Department letter, dated October 24, 2001. The release investigation (RI) work plan is presented herein and describes activities to be completed to define the lateral extent of soil contamination and the possibility of ground water contamination at the site.

RELEASE INVESTIGATION WORK PLAN

Three 2-inch PVC monitoring wells will be installed at the site in the locations shown on the attached figure. Soils in all test borings used to install monitoring wells will be screened with a photoionization detector (PID) at 5-foot intervals in the three borings. A soil sample will be collected for laboratory analysis at the ground water interface from each of the three monitoring wells. Additional soil samples will be collected from the test borings if PID screening indicates that contamination is present at other depths. Soil samples will be analyzed for gasoline range organics (GRO) by Alaska Method AK101, diesel range organics (DRO) by Alaska Method AK102 and BTEX by EPA Method 8021B.

Following installation of the monitoring wells, the monitoring wells will be hand bailed using a new disposable polyethylene bailer for each well. The first bailer of water removed from each well will be examined for petroleum odor and sheen, or any other

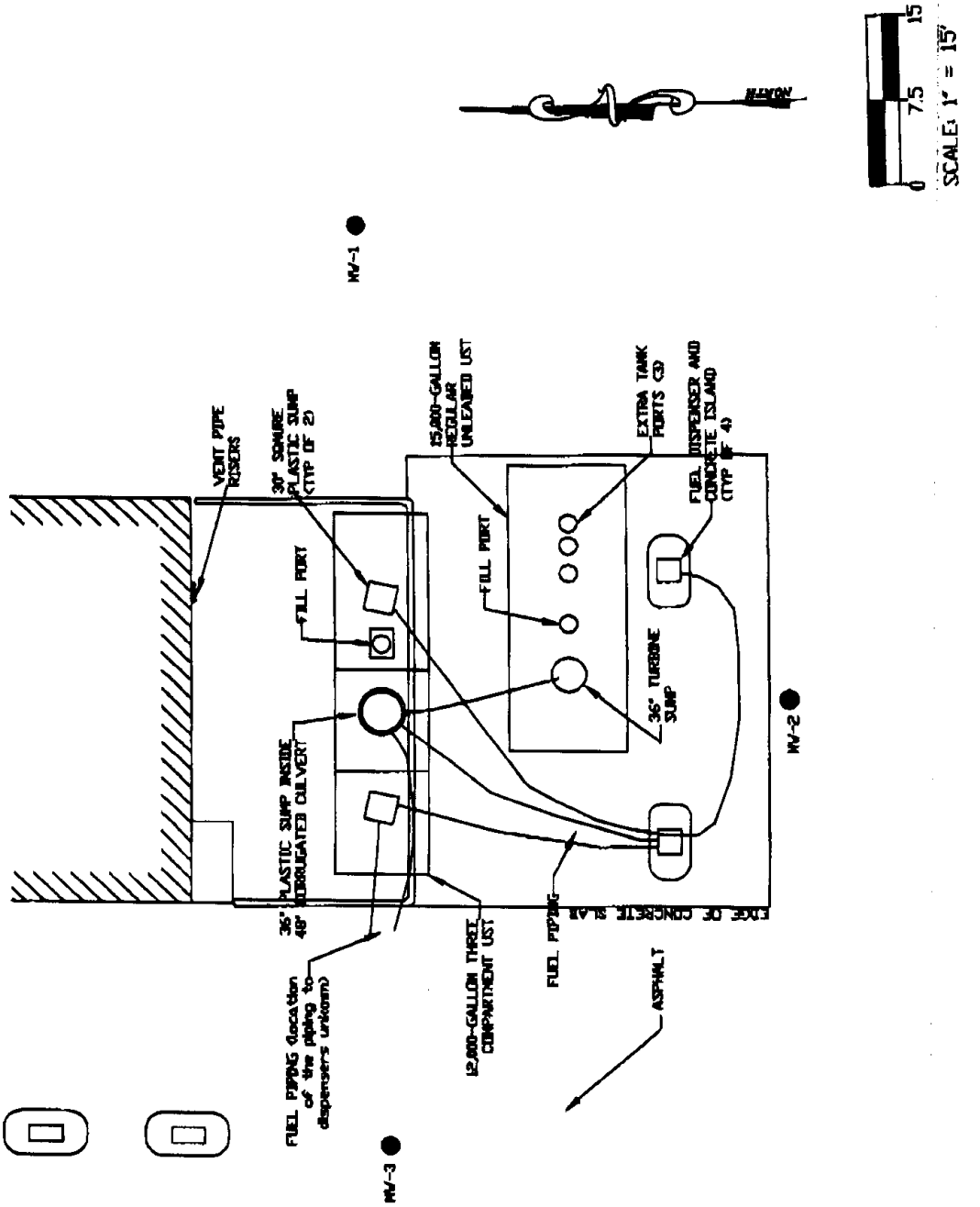

BIRD CREEK TEXACO – PROPOSED MONITORING WELL LOCATIONS

ALASKA COMPLETE TANK	2700 Huffman Road Anchorage, AK 99516 (907) 345-8339 Toll Free 888-330-8339 Fax (907) 345-8370	SCALE: 1"=15'	DRAWN BY: CJH
		DATE: 12/10/01	CHECKED BY: CJH
		PROJECT No. 2041	

unique physical features. The wells will be allowed to fully recover prior to sample collection.

Collected groundwater samples will be analyzed for GRO by Alaska Method AK101, DRO by Alaska Method AK101 and BTEX by EPA Method 8021B. All field and sampling activities completed as part of this release investigation will be in accordance with the ADEC Underground Storage Tanks Procedures Manual - Standard Sampling Procedures (December 10, 1998).

Following receipt of laboratory analytical results, ACT will prepare a release investigation report. Recommendations for corrective action will be outlined in that report.

We request that scheduling to complete the RI drilling be allowed for early June 2002. A corrective action plan would be developed after obtaining the information from the release investigation.

The requested well search mentioned in the Department's October 24th letter is currently being completed. Results of this search will be submitted to the Department by December 21, 2001.

Please review this release investigation work plan and respond with the Department's approval. We look forward to working with the Department on this project. If you have any questions regarding this letter, please contact us at 770-3942.

Sincerely,

Christopher Hawe

Christopher Hawe, P.E.
Director of Engineering and Environmental Services

Attachments: Figure showing Proposed Monitoring Well Locations

c: Doug Lechner, SPI

Alaska Complete & Tank

2700 HUFFMAN ROAD
ANCHORAGE ALASKA 99516
(907) 345-8339
Toll Free 888-330-8339
Fax (907) 345-8370
www.alaskacomplete.com

December 20, 2001

Hand Delivered

Robert Weimer
Environmental Specialist
UST Program
Alaska Department of Environmental Conservation
555 Cordova Street
Anchorage, Alaska, 99501

RE: Well Search
Bird Creek Texaco UST System, Mile 101 Seward Highway, Indian, Alaska
Spill #: 95210016701, File #: L25.21, Facility ID #: 2715
ACT Project No. 2041

Dear Mr. Weimer:

On behalf of Doug Lechner of Shoreside Petroleum, Inc. (SPI), Alaska Complete Tank (ACT) is submitting the results of a well search within ¼ mile radius of the release point at the Bird Creek Texaco (see the attached Figure). The Department requested the well search in a letter to Mr. Lechner dated October 24, 2001.

The information for the well search was collected during a site visit to the area on December 17, 2001. During the site visit, Chris Hawe with ACT met with Eric Lambertson, owner of the Bird Creek Café, to obtain information on his and other properties in the area. The café is located on the property to the southeast of the release site across Sawmill Road, and has two wells on the property. After his interview with Mr. Lambertson, Mr. Hawe drove to each property and looked for wells. He talked with several owners in the area to verify the usage of the wells and any alternate water sources. The information obtained from the work completed is discussed below.

All of the properties in the ¼ mile radius of the well search have wells that are used by the residents for drinking water, except the two properties marked as vacant and all the rectangular lots, which are all vacant right-of-way lots, fronting the Seward Highway. No developed properties with wells are located to the southwest across the Seward Highway. Based on information provided by the owners interviewed by Mr. Hawe, the depth of the drinking water in the area is between 65 and 130 feet. Property owners indicated that the drinking water aquifer was a very high producer.

The search area topography mainly slopes upward from the highway to the northeast across the area until the steeper slopes of the Chugach Mountains begin. However, there is downward sloping topography from the release area on the subject site to the southeast in the direction the Seward Highway runs.

Based on the topography of the area, ground water flow is expected to be from the northeast where mountain slopes begin to the southwest into Cook Inlet waters. There may be a slight south to southeasterly component of flow resulting from the less pronounced sloping topography in the direction of the Seward Highway .

The most probable wells that may be at risk if the Texaco release has impacted ground water are the two wells on the café property to the southeast, and the well on the Texaco site (see the attached Figure). The Texaco well is the closest well to the release point at a distance of 120 feet, although this location is believed to be up gradient of the release point.

Please review the well search results presented herein and let us know if the Department needs any further information on the status of wells in the area of the Texaco release.

Sincerely,

Christopher Hawe. P.E.
Director of Engineering and Environmental Services

Attachments: ¼ Mile Well Search Figure

c: Doug Lechner, SPI

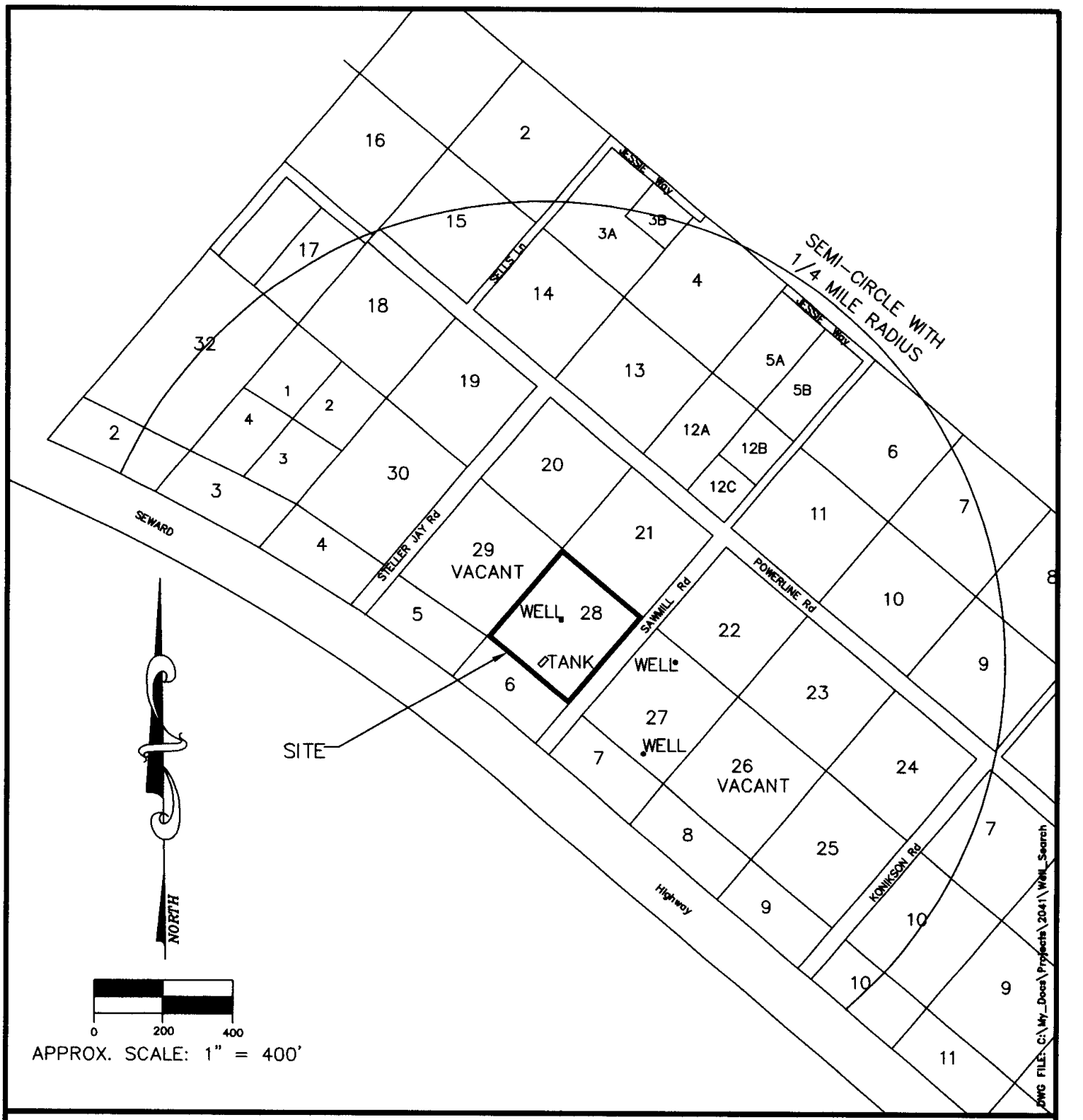

BIRD CREEK TEXACO – 1/4 MILE WELL SEARCH

ALASKA COMPLETE TANK	2700 Huffman Road Anchorage, AK 99516 (907) 345-8339 Toll Free 888-330-8339 Fax (907) 345-8370	SCALE: 1"=400'	DRAWN BY: CJH
		DATE: 12/19/01	CHECKED BY: CJH
		PROJECT No. 2041	