OCEAN BEAUTY SEAFOODS, LLC
PETERSBURG, ALASKA
SEAFOOD PROCESS WASTEWATER OUTFALL REINSTALLATION

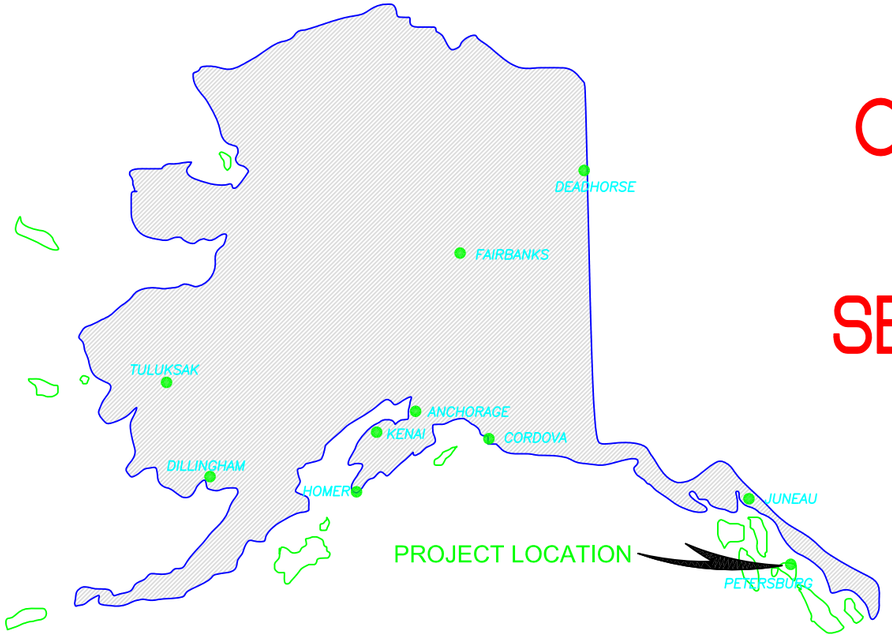

LOCATION MAP

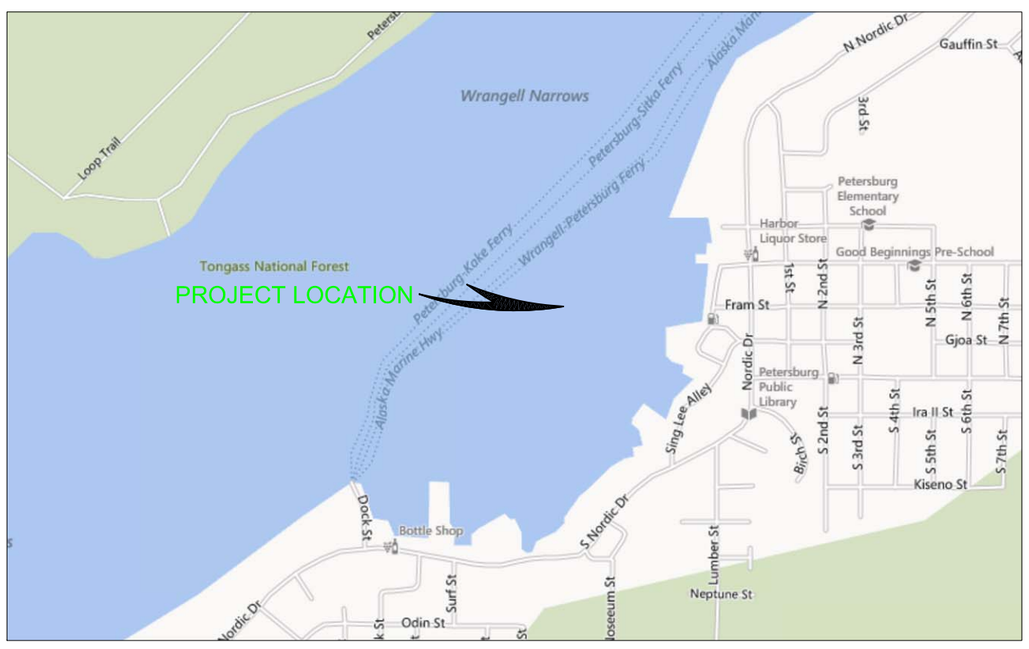

INDEX TO DRAWINGS

TITLE	SHEET
TITLE SHEET AND LOCATION MAP	1
OVERVIEW IMAGE	2
NAUTICAL MAP	3
SITE PLAN AND PROFILE	4
TYPICAL DETAILS	5

RECORD DRAWING CERTIFICATE

Record Drawing information is based on periodic observations during construction, made by the Engineer, or by individuals under the Engineer's direct supervision, and from information provided by the construction Contractor. Record information is accurate to the best of my knowledge.

Signed: _____ Date: 06/12/2014

NO.	REVISION	DATE

CONSULTING ENGINEERS
STRUCTURAL/CIVIL
155 BIDARKA ST
KENAI, AK 99611
TEL. (907) 283 - 3583
NELSONENGINEER@ALASKA.NET
NELSON ENGINEERING

SEAFOOD PROCESS WASTEWATER OUTFALL
OCEAN BEAUTY SEAFOODS, LLC
PETERSBURG, ALASKA
TITLE SHEET AND LOCATION MAP

PROJECT NO. 1390
DRAWN BY: WJN/MZD
CHECKED BY: WJN
DATE: 03/18/2014
SCALES: NOTED
HORIZ. NOTED
VERT. NOTED
SHEET: C1
1 OF 5

NO.	REVISION	DATE

CONSULTING ENGINEERS
STRUCTURAL/CIVIL
155 BIDARKA ST
KENAI, AK 99611
TEL. (907) 283 - 3583
NELSONENGINEER@ALASKA.NET
NELSON ENGINEERING

SEAFOOD PROCESS WASTEWATER OUTFALL
OCEAN BEAUTY SEAFOODS, LLC
PETERSBURG, ALASKA
OVERVIEW IMAGE

PROJECT NO. 1390
DRAWN BY: WJN/MZD
CHECKED BY: WJN
DATE: 03/18/2014
SCALES: NOTED
HORIZ. NOTED
VERT. NOTED
SHEET: C2
2 OF 5

PLANE COORDINATE GRID
(based on NAD 1927)
Alaska State Grid, zone 1, is indicated by dashed ticks at 2,000 foot intervals. The last three digits are omitted.

Kupreanof
Bayou Pt
Ruins
Pier
Mud
Rocks
Float
F Y 24ft
F Y 10ft
F Y 13ft
Q R 15ft 3M "56"
Fl R 2.5s 15ft 3M "58"
F R 15ft Priv
Dols
Ferry Terminal
Cannery
Bkhd in ruins
20 FEET FOR WIDTH OF 300 FEET MAY 2008
PETERSBURG BAR RANGE
G "59"
Fl G 2.5s
F R 15ft Priv
F R 13ft Priv
F R 13ft Priv
F R 18ft Priv
F R 18ft Priv
F R 14ft Priv
Ocean Beauty Seafoods Pier
Piles
Ramp
Pile-s
White Pass City Dock
0 200 400 800 1200
GRAPHIC SCALE

NO.	REVISION	DATE

CONSULTING ENGINEERS
STRUCTURAL/CIVIL
155 BIDARKA ST
KENAI, AK 99611
TEL. (907) 283 - 3583
NELSONENGINEER@ALASKA.NET
NELSON ENGINEERING

SEAFOOD PROCESS WASTEWATER OUTFALL
OCEAN BEAUTY SEAFOODS, LLC
PETERSBURG, ALASKA
NAUTICAL MAP

PROJECT NO. 1390
DRAWN BY: WJN/MZD
CHECKED BY: WJN
DATE: 03/18/2014
SCALES: NOTED
HORIZ. NOTED
VERT. NOTED
SHEET: C3
3 OF 5

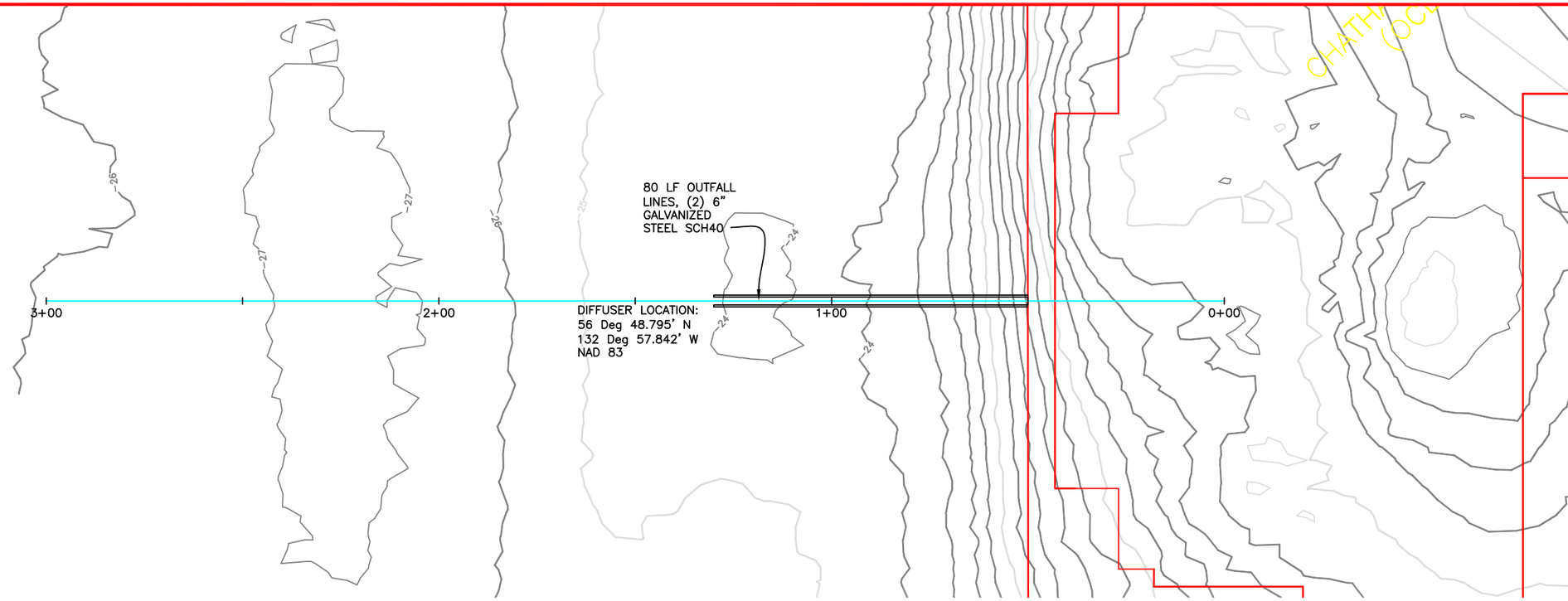

A/C4 PLAN VIEW

GRAPHIC SCALE: 1" = 16' (22X34); 1" = 32' (11X17)

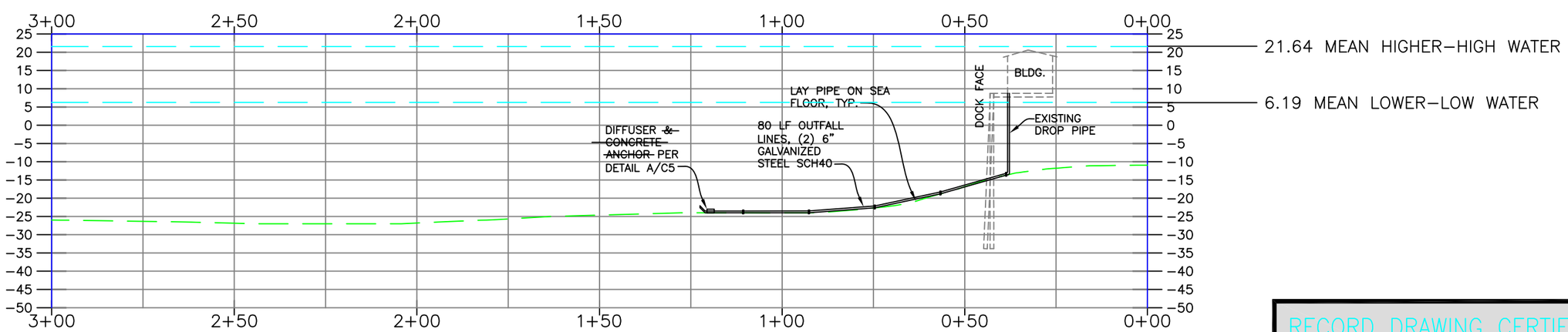

B/C4 PROFILE VIEW

GRAPHIC SCALE: 1" = 16' (22X34); 1" = 32' (11X17)

RECORD DRAWING CERTIFICATE

Record Drawing information is based on periodic observations during construction, made by the Engineer, or by individuals under the Engineer's direct supervision, and from information provided by the construction Contractor. Record information is accurate to the best of my knowledge.

Signed: Date: 06/12/2014

NO.	REVISION	DATE

CONSULTING ENGINEERS
STRUCTURAL/CIVIL
155 BIDARKA ST
KENAI, AK 99611
TEL. (907) 283 - 3583
NELSONENGINEER@ALASKA.NET
NELSON ENGINEERING

SEAFOOD PROCESS WASTEWATER OUTFALL
OCEAN BEAUTY SEAFOODS, LLC
PETERSBURG, ALASKA
SITE PLAN AND PROFILE

PROJECT NO. 1390
DRAWN BY: WJN/MZD
CHECKED BY: WJN
DATE: 03/18/2014
SCALES: NOTED
HORIZ. NOTED
VERT. NOTED
SHEET: C4

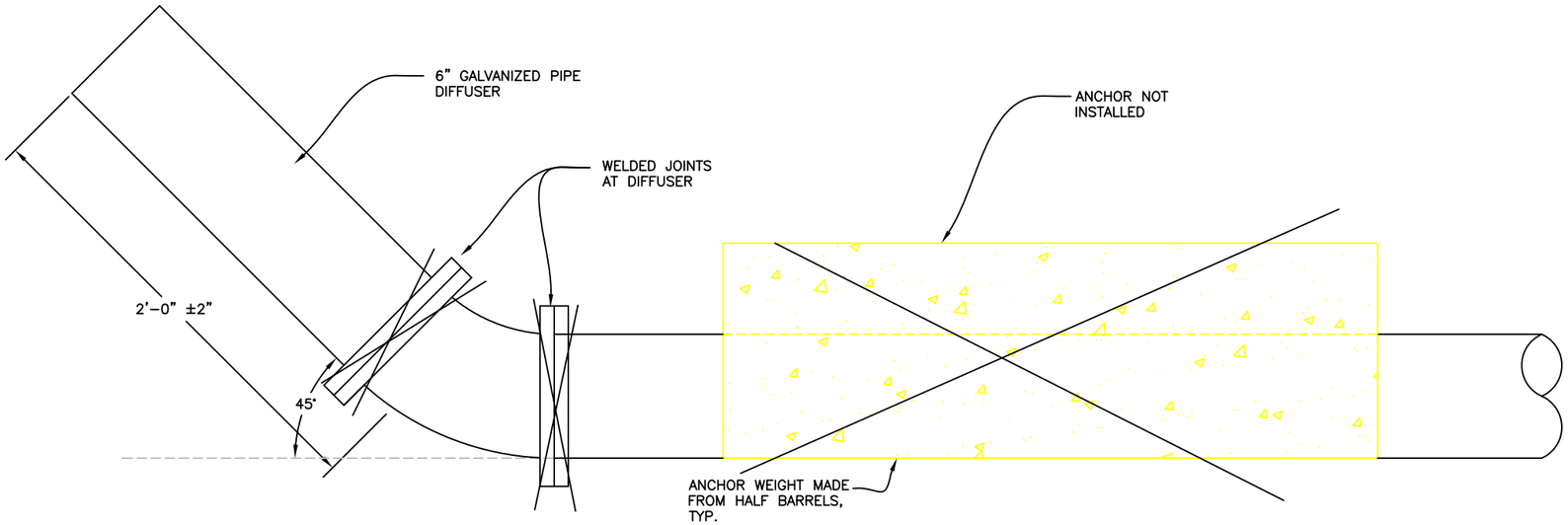

A C5 DIFFUSER AND CONCRETE ANCHOR

GRAPHIC SCALE: 3" = 1' (11X17); 1-1/2" = 1' (22X34)

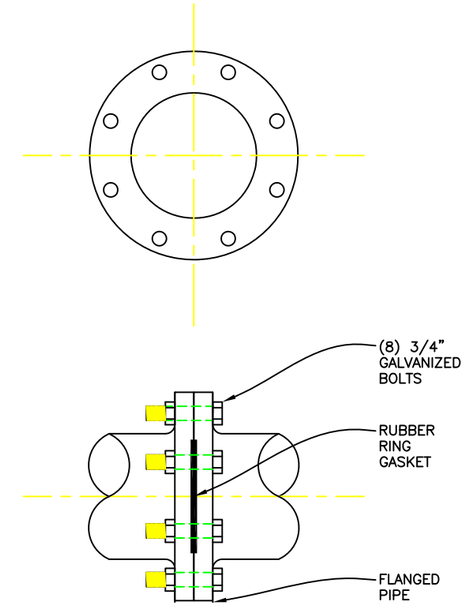

B C5 TYPICAL OUTFALL PIPE JOINT

GRAPHIC SCALE: 3" = 1' (11X17); 1-1/2" = 1' (22X34)

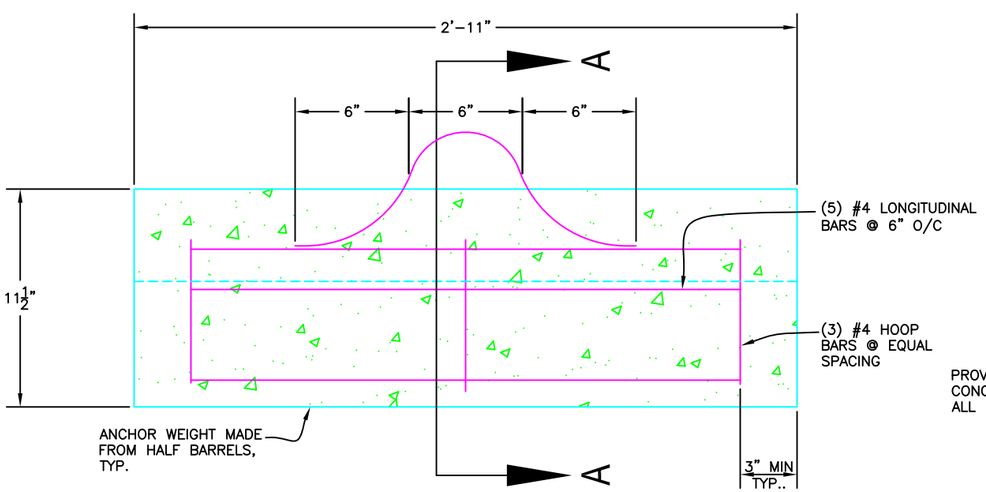

CONCRETE WEIGHT IS APPROXIMATELY 500 LBS

C C5 CONCRETE ANCHOR DETAIL

GRAPHIC SCALE: 3" = 1' (11X17); 1-1/2" = 1' (22X34)

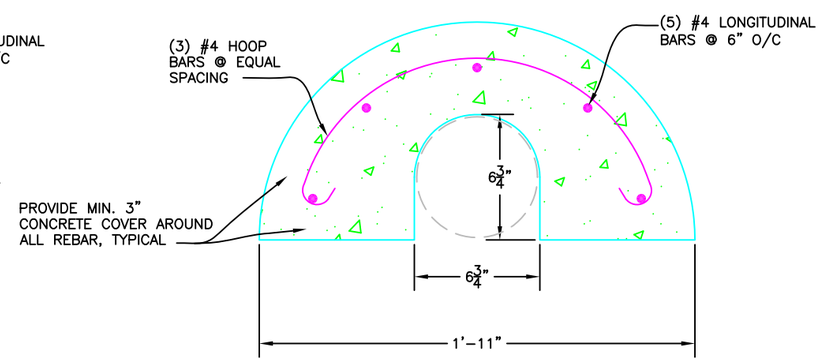

SECTION A-A

RECORD DRAWING CERTIFICATE

Record Drawing information is based on periodic observations during construction, made by the Engineer, or by individuals under the Engineer's direct supervision, and from information provided by the construction Contractor. Record information is accurate to the best of my knowledge.

Signed: _____ Date: 06/12/2014

NO.	REVISION	DATE

CONSULTING ENGINEERS
STRUCTURAL/CIVIL
155 BIDARKA ST
KENAI, AK 99611
TEL. (907) 283 - 3583
NELSONENGINEER@ALASKA.NET
NELSON ENGINEERING

SEAFOOD PROCESS WASTEWATER OUTFALL
OCEAN BEAUTY SEAFOODS, LLC
PETERSBURG, ALASKA
SITE PLAN AND PROFILE

PROJECT NO. 1390
DRAWN BY: WJN/MZD
CHECKED BY: WJN
DATE: 03/18/2014
SCALES: NOTED
HORIZ. NOTED
VERT. NOTED
SHEET: C5