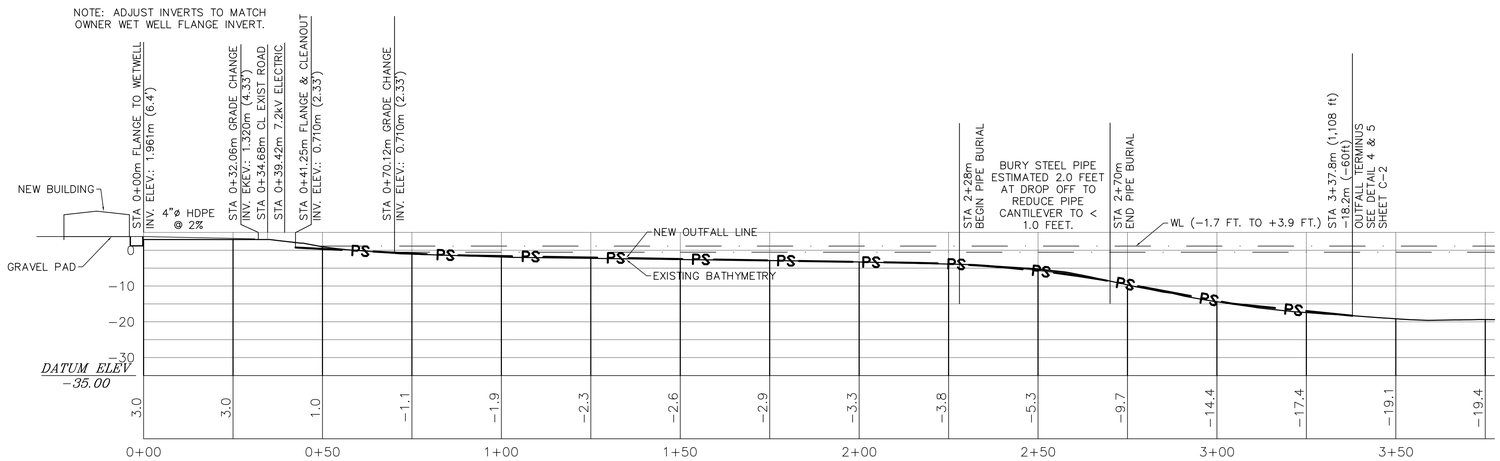

1 OUTFALL PROFILE
SCALE: 1"=20 METERS

SURVEY CONTROL:

HORIZONTAL CONTROL – ALASKA STATE PLANE ZONE 7, NAD83 (1997) IN METERS. THE BASIS OF COORDINATES IS A CONTINUOUSLY OPERATING REFERENCE STATION (CORS) "BAY 1" LOCATED AT COLD BAY, ALASKA HAVING A VALUE OF N 132,711.398 AND E 454,966.582. COORDINATES AND BEARINGS WERE DERIVED FROM GPS OBSERVATIONS AT THE PROJECT DURING THE PERIOD OF AUGUST 25 THROUGH 31, 1999.

VERTICAL CONTROL – USC&GS MLLW ELEVATIONS ARE MLLW IN METERS. THE BASIS OF ELEVATIONS IS USC&GS TIDAL BENCH MARK "1 23", HAVING A VALUE OF 2.131 METERS ABOVE MEAN LOWER LOW WATER.

HYDROGRAPHIC AND TOPOGRAPHIC SURVEY INFORMATION AND TEST BORINGS ARE FROM US ARMY CORPS OF ENGINEERS, FALSE PASS HARBOR PROJECT DRAWINGS.

NOTES:

1. THE CONTRACTOR IS RESPONSIBLE FOR VERIFYING AND FIELD LOCATING EXISTING UTILTIES. EXISTING UTILITY LOCATIONS ARE SHOWN ON THESE DRAWINGS USING BEST AVAILABLE INFORMATION. THE CONTRACTOR SHALL TAKE ALL PROPER PRECAUTIONS TO AVOID DISTURBANCE OF SUCH UTILTIES AND SHALL BE RESPONSIBLE FOR REPAIRING ANY DAMAGE TO SUCH UTILITIES DURING CONSTRUCTION.

2. HDPE OUTFALL PIPE AND FITTINGS SHALL BE SDR 17, 4"ø.

3. STEEL OUTFALL PIPE SHALL BE 5"ø SCHEDULE 120, 1/2" WALL THICKNESS ASTM A53 GRADE B, MIN YIELD 36 KSI.

4. ALL BOLTS SHALL CONFORM TO ASTM A307 UNLESS NOTED OTHERWISE.

5. ALL BOLTS, ANCHOR BOLTS, EXPANSION BOLTS, ETC., SHALL BE INSTALLED WITH STEEL WASHERS.

6. ALL STEEL ACCESSORIES SHALL BE HOT DIPPED GALVANIZED UNLESS NOTED OTHERWISE.

7. ALL WELDING BY WELDERS HOLDING VALID CERTIFICATES AND HAVING CURRENT EXPERIENCE IN TYPE OF WELD SHOWN ON THE DRAWINGS OR NOTES. CERTIFICATES SHALL BE THOSE ISSUED BY AN ACCEPTED TESTING AGENCY.

8. ALL WELDING DONE BY E70 SERIES LOW HYDROGEN RODS. ALL WELDING PER AMERICAN WELDING SOCIETY STANDARDS.

9. INSTALL 21 EACH 20# ZINC ANODES ON STEEL OUTFALL LINE AT 40' O.C. MIN.

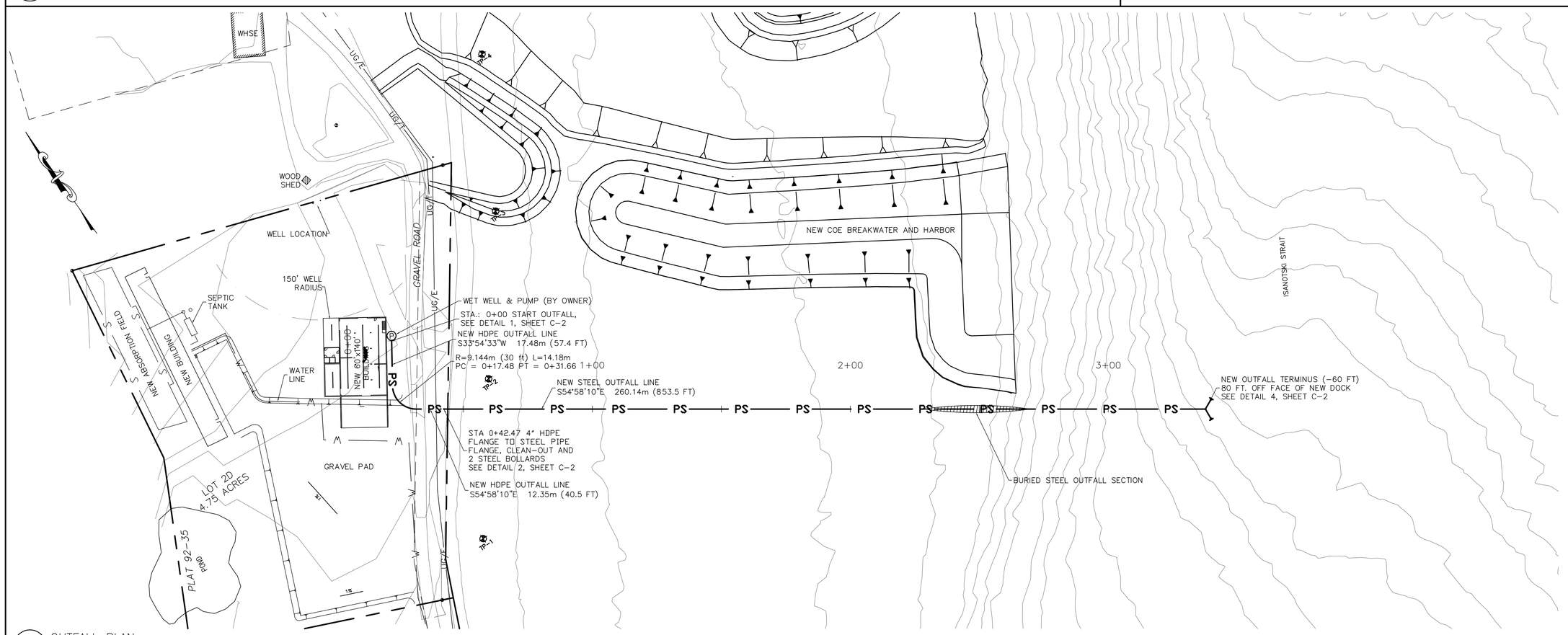

2 OUTFALL PLAN
SCALE: 1" = 20 METERS

STATE OF ALASKA 49th
MICHAEL D. DAHL No. CE-8480
REGISTERED PROFESSIONAL ENGINEER

polarconsult alaska, inc.
ENERGY SYSTEMS • ENVIRONMENTAL SERVICES • ENGINEERING DESIGN
1503 WEST 33RD AVE, SUITE 310 PHONE (907) 258-2420
ANCHORAGE, ALASKA 99503 FAX (907) 258-2419

REVISIONS

NO.	DATE	
1	5/24/07	EXTEND OUTFALL 30 FT TO - 60

Drawing
FALSE PASS OUTFALL PLAN AND PROFILE

Project
APICDA
F
False Pass, AK

DATE: 4/24/07
DESIGNED: MD
DRAWN:
CHECKED: JG
SCALE: AsNoted
FILE: SITE

Sheet
C-1
OF

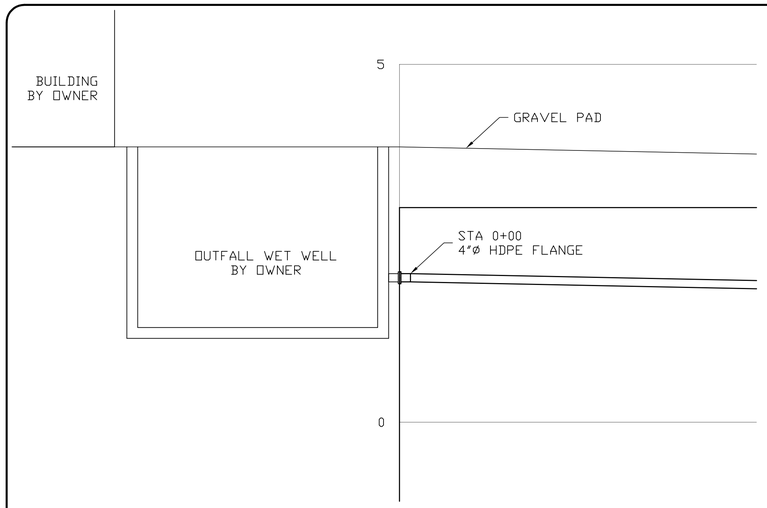

1 OUTFALL PROFILE DETAIL STA 0+00
SCALE: 1"= 1 METERS

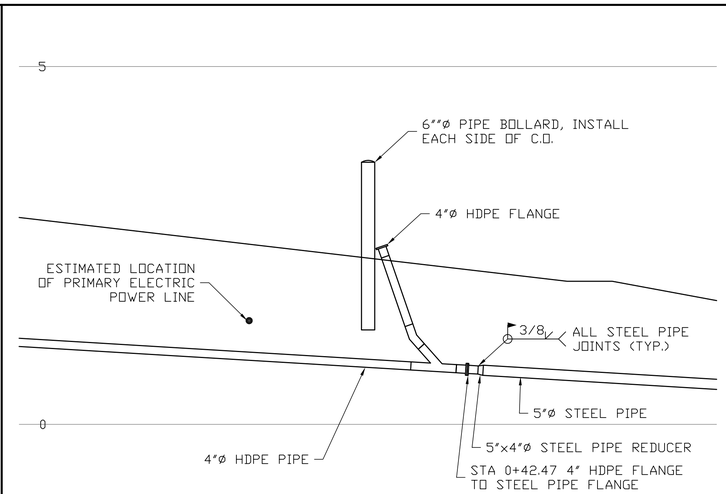

2 OUTFALL PROFILE DETAIL STA 0+41.25 CLEAN-OUT
SCALE: 1"= 1 METERS

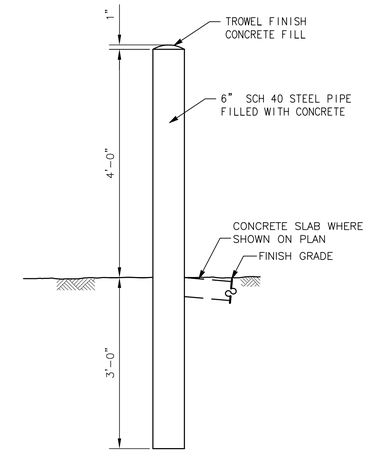

3 BOLLARD DETAIL
SCALE: NTS

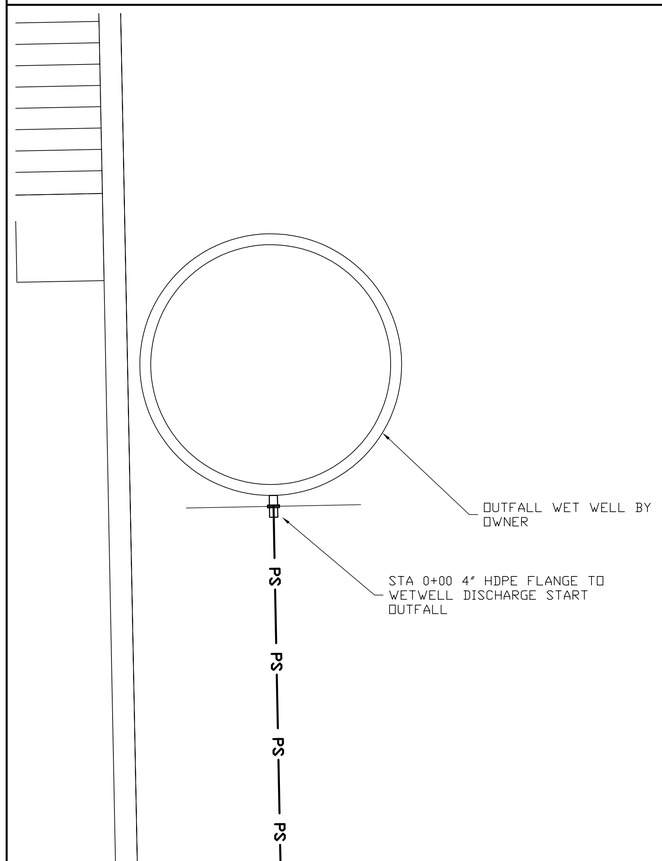

4 OUTFALL PLAN STA 0+00
SCALE: 1" = 1 METERS

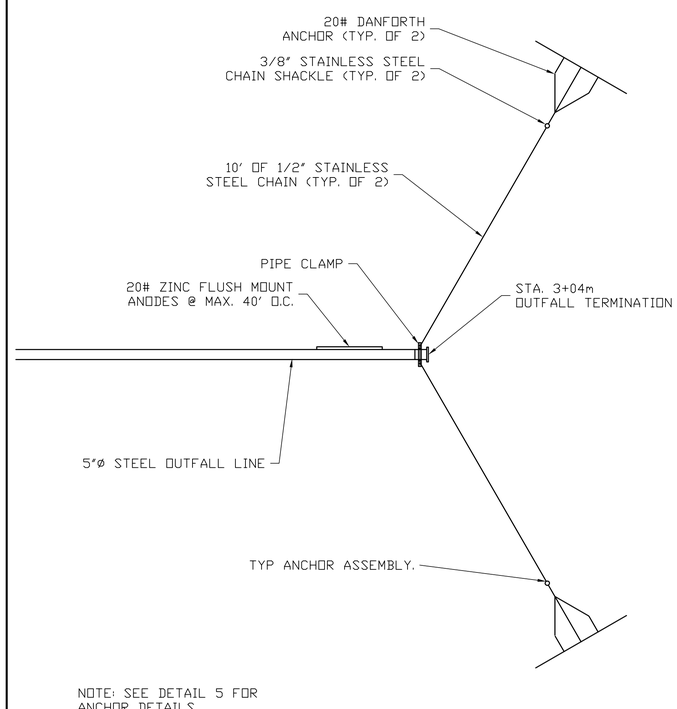

NOTE: SEE DETAIL 5 FOR
ANCHOR DETAILS

5 OUTFALL PLAN DETAIL STA 3+04 TERMINATION
SCALE: 1" = 1 METERS

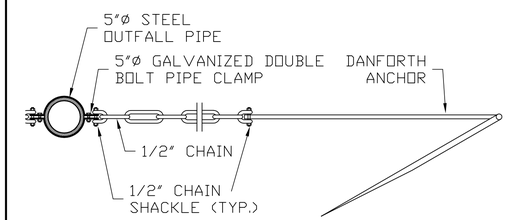

6 OUTFALL TERMINATION ANCHOR DETAIL
SCALE: NTS

STATE OF ALASKA 49th
MICHAEL D. DAHL
No. CE-8480
REGISTERED PROFESSIONAL ENGINEER

polarconsult alaska, inc.
ENERGY SYSTEMS • ENVIRONMENTAL SERVICES • ENGINEERING DESIGN
1503 WEST 33RD AVE, SUITE 310
ANCHORAGE, ALASKA 99503
PHONE (907) 258-2420
FAX (907) 258-2419

NO.	DATE	REVISIONS

Drawing
FALSE PASS OUTFALL PLAN AND PROFILE

Project
APICDA
F
False Pass, AK

DATE: 1/15/06
DESIGNED: MD
DRAWN:
CHECKED: JG
SCALE: AsNoted
FILE: SITE

Sheet
C-2
OF