ALASKA POLLUTANT DISCHARGE ELIMINATION SYSTEM

PERMIT FACT SHEET – DRAFT

Individual Permit: AK0055883 – Hilcorp Alaska, LLC
Granite Point Platform
Supplemental Production Drilling

DEPARTMENT OF ENVIRONMENTAL CONSERVATION
Wastewater Discharge Authorization Program
555 Cordova Street
Anchorage, AK 99501

Public Comment Period Start Date: **April 26, 2019**
Public Comment Period Expiration Date: **May 28, 2019**

Technical Contact: Gerry Brown, PE
Alaska Department of Environmental Conservation
Division of Water
Wastewater Discharge Authorization Program
555 Cordova Street
Anchorage, AK 99501
(907) 269-4874
Fax: (907) 269-3487
Gerry.Brown@alaska.gov

Issuance of an Alaska Pollutant Discharge Elimination System (APDES) individual permit to:

HILCORP ALASKA, LLC

Provides authorization to discharge at the following approximate location:

Facility	Receiving Water	Latitude	Longitude
Osprey Platform	Cook Inlet	60.957603	-151.333698

The Alaska Department of Environmental Conservation (the Department or DEC) is issuing APDES individual permit AK0055883 – Hilcorp Alaska, LLC, Granite Point Platform Supplemental Production Drilling (Permit). The Permit authorizes and sets conditions on the discharge of pollutants from this facility to state waters. In order to ensure protection of water quality and human health, the Permit places limits on the types and amounts of pollutants that can be discharged from these operations and outlines best management practices to which these operations must adhere.

This fact sheet explains the nature of potential discharges from oil and gas exploration facilities operating in state waters in Cook Inlet and the development of the Permit including:

- information on public comment, public hearing, and appeal procedures
- a listing of proposed effluent limitations and other conditions
- technical material supporting the conditions in the Permit
- proposed monitoring requirements in the Permit

Public Comment

Persons wishing to comment on, or request a public hearing for the Draft Permit for this facility, may do so in writing by the expiration date of the public comment period.

Commenters are requested to submit a concise statement on the Permit condition(s) and the relevant facts upon which the comments are based. Commenters are encouraged to cite specific Permit requirements or conditions in their submittals.

A request for a public hearing must state the nature of the issues to be raised, as well as the requester's name, address, and telephone number. The Department will hold a public hearing whenever the Department finds, on the basis of requests, a significant degree of public interest in a draft permit. The Department may also hold a public hearing if a hearing might clarify one or more issues involved in a permit decision or for other good reason, in the Department's discretion. A public hearing will be held at the closest practicable location to the site of the operation. If the Department holds a public hearing, the Director will appoint a designee to preside at the hearing. The public may also submit written testimony in lieu of or in addition to providing oral testimony at the hearing. A hearing will be tape recorded. If there is sufficient public interest in a hearing, the comment period will be extended to allow time to public notice the hearing. Details about the time and location of the hearing will be provided in a separate notice.

All comments and requests for public hearings must be in writing and should be submitted to the Department at the technical contact address, fax, or email identified above (see also the public comments section of the attached public notice). Mailed comments and requests must be postmarked on or before the expiration date of the public comment period.

After the close of the public comment period and after a public hearing, if applicable, the Department will review the comments received on the Draft Permit. The Department will respond to the comments received in a Response to Comments document that will be made available to the public. If no substantive comments are received, the tentative conditions in the Draft Permit will become the proposed Final Permit.

The proposed Final Permit will be made publicly available for a five-day applicant review. The applicant may waive this review period. After the close of the proposed Final Permit review period, the Department will make a final decision regarding permit issuance. A Final Permit will become effective 30 days after the Department's decision, in accordance with the state's appeals process at 18 AAC 15.185.

The Department will transmit the Final Permit, Fact Sheet (amended as appropriate), and the Response to Comments to anyone who provided comments during the public comment period or who requested to be notified of the Department's final decision.

Appeals Process

The Department has both an informal review process and a formal administrative appeal process for final APDES permit decisions. An informal review request must be delivered within 20 days after receiving the Department's decision to the Director of Water at the following address:

Director, Division of Water
Alaska Department of Environmental Conservation
555 Cordova Street
Anchorage AK, 99501

Interested persons can review 18 AAC 15.185 for the procedures and substantive requirements regarding a request for an informal Department review. For information regarding informal review of Department decisions see http://dec.alaska.gov/commish/review-guidance/informal-reviews.

An adjudicatory hearing request must be delivered to the Commissioner of the Department within 30 days of the permit decision or a decision issued under the informal review process. An adjudicatory hearing will be conducted by an administrative law judge in the Office of Administrative Hearings within the Department of Administration. A written request for an adjudicatory hearing shall be delivered to the Commissioner at the following address:

Commissioner
Alaska Department of Environmental Conservation
P.O. Box 111800
Juneau AK, 99811-1800

Location: 410 Willoughby Street, Juneau

Interested persons can review 18 AAC 15.200 for the procedures and substantive requirements regarding a request for an adjudicatory hearing. See http://dec.alaska.gov/commish/review-guidance/adjudicatory-hearing-guidance for information regarding appeals of Department decisions.

Documents are Available

The permit, fact sheet, and related documents can be obtained by visiting or contacting DEC between 8:00 a.m. and 4:30 p.m. Monday through Friday at the addresses below. The permit, fact sheet, and other information are also located on the Department's Wastewater Discharge Authorization Program website: http://dec.alaska.gov/water/wastewater/.

Alaska Department of Environmental Conservation Division of Water Wastewater Discharge Authorization Program 555 Cordova Street Anchorage, AK 99501 (907) 269-6285	Alaska Department of Environmental Conservation Division of Water Wastewater Discharge Authorization Program 410 Willoughby Avenue Juneau AK, 99811-1800 (907) 465-5180
Alaska Department of Environmental Conservation Division of Water Wastewater Discharge Authorization Program 610 University Avenue Fairbanks, AK 99709-3643 (907) 451-2183	Alaska Department of Environmental Conservation Division of Water Wastewater Discharge Authorization Program 43335 Kalifornsky Beach Rd. - Suite 11 Soldotna, AK 99669 (907) 262-5210

TABLE OF CONTENTS

1 INTRODUCTION 6

1.1 Applicant 6
1.2 Authority 6

2 BACKGROUND 6

2.1 Project Description 6
2.2 Facility 7
2.3 Requested Discharges 8
2.4 Discharge Location 8

3 WASTEWATER CHARACTERIZATION 8

3.1 Graywater (Discharge 004) 8
3.2 Non-Contact Cooling Water (Discharge 009) 9
3.3 Uncontaminated Ballast Water (Discharge 010) 10
3.4 Summary of Requested Discharges and Volume Estimates 11

4 RECEIVING WATERS 11

4.1 Water Quality Standards 11
4.2 Water Quality Status of Receiving Water 11
4.3 Mixing Zone Analysis 12

5 EFFLUENT LIMIT DEVELOPMENT 16

5.1 Basis for Permit Effluent Limits 16
5.2 TBELs Based on ELGs 16
5.3 TBELs based on Case-by-Case Best Professional Judgment 17
5.4 Water Quality-Based Effluent Limits 18
5.5 Secondary Treatment Requirements and Waivers per 18 AAC 72 18

6 EFFLUENT LIMITS AND MONITORING REQUIREMENTS 19

6.1 Effluent Limits and Monitoring Requirements for Graywater (004) 19
6.2 Effluent Limits and Monitoring Requirements for Miscellaneous Discharges (009, 010) 20
6.3 Chronic WET Monitoring Requirements 21
6.4 Additional Effluent Monitoring 22
6.5 Electronic Discharge Monitoring Reports 23

7 ANTIBACKSLIDING 23

8 ANTIDEGRADATION 24

8.1 Legal Basis 24
8.2 Receiving Water Status, Tier Determination, and Analysis Requirements 24
8.3 Tier 1 Analysis of Existing Use Protection 25
8.4 Tier 2 Analysis for Lowering Water Quality 25

9 OTHER PERMIT CONDITIONS 30

9.1 Standard Permit Provisions 30
9.2 Quality Assurance Project Plan 30
9.3 Best Management Practices Plan 31
9.4 Termination Notification 32

10 OTHER LEGAL REQUIREMENTS 32

10.1 Endangered Species Act 32
10.2 Essential Fish Habitat 33
10.3 Permit Expiration 33

11 REFERENCES 34

ATTACHMENT 1. MIXING ZONE ANALYSIS CHECKLIST 37

FIGURES

Figure 1: Permit Coverage Area 7

Figure 2: Graywater Treatment System 9

Figure 3: Noncontact Cooling Water System 10

TABLES

Table 1: Requested Discharges and Estimated Volumes 11

Table 2: Summary of Spartan 151 2018 Temperature Data 14

Table 3: Effluent Limits and Monitoring Requirements for Graywater (004) 19

Table 4: Effluent Limits and Monitoring for Miscellaneous Discharges (009 and 010) 20

1 INTRODUCTION

On January 29, 2019, the Alaska Department of Environmental Conservation (DEC or Department) received an Alaska Pollutant Discharge Elimination System (APDES) individual permit application from Hilcorp Alaska, LLC (Hilcorp or applicant). The application included a request for the Department to develop an APDES individual permit to authorize discharges from an oil and gas mobile offshore drilling unit (MODU) operating at the Granite Point Platform (GPP) in coastal waters of Cook Inlet. The Information contained in this fact sheet is based on the application and follow-up information requested by DEC.

1.1 Applicant

This fact sheet provides information on the APDES permit for the following entity:

Name of Facility:	GPP Supplemental Production Drilling
APDES Permit Number:	AK0055883
Facility Location:	Latitude 60° 57' 27.3708", Longitude - 151° 20' 1.3128"
Mailing Address:	PO Box 244027, Anchorage, AK 99503
Facility Contact:	Ms. Jessica Fisher

1.2 Authority

On October 31, 2008, the Environmental Protection Agency (EPA) approved an application from Alaska to administer the National Pollutant Discharge Elimination System (NPDES) Program, which regulates the discharges of pollutant point sources to waters of the United States (U.S.) located in the State of Alaska. The state program is the APDES Program and is administered by DEC. Transfer of the NPDES Program to the State occurred in four phases with oil and gas facilities transferring as part of Phase IV, which occurred on October 31, 2012. Accordingly, DEC is the APDES permitting authority for regulating the discharges associated with AK0055883 – Hilcorp Granite Point Platform Supplemental Production Drilling (Permit). This is the first issuance of the Permit.

Section 301(a) of the Clean Water Act (CWA) and Alaska Administrative Code (AAC) 18 AAC 83.015 provide that the discharge of pollutants to waters of the U.S. is unlawful except in accordance with an APDES permit. The proposed individual permit issuance is being developed in accordance with regulations 18 AAC 83.115 and 18 AAC 83.120. A violation of a condition contained in the Permit constitutes a violation of the CWA and subjects the permittee of the facility with the permitted discharge to the penalties specified in Alaska Statute (AS) 46.03.760 and AS 46.03.761.

2 BACKGROUND

2.1 Project Description

Hilcorp proposes to conduct production drilling operations at GPP in support of increasing oil and gas production. Proposed drilling activities and related discharges will be in the west side of Cook Inlet, approximately three and one half (3.5) miles offshore of Granite Point. The GPP is in the area of upper Cook Inlet near the Granite Point Tank Farm and two other active production platforms within the Granite Point Unit, Bruce and Anna (See Figure 1).

Figure 1: Permit Coverage Area

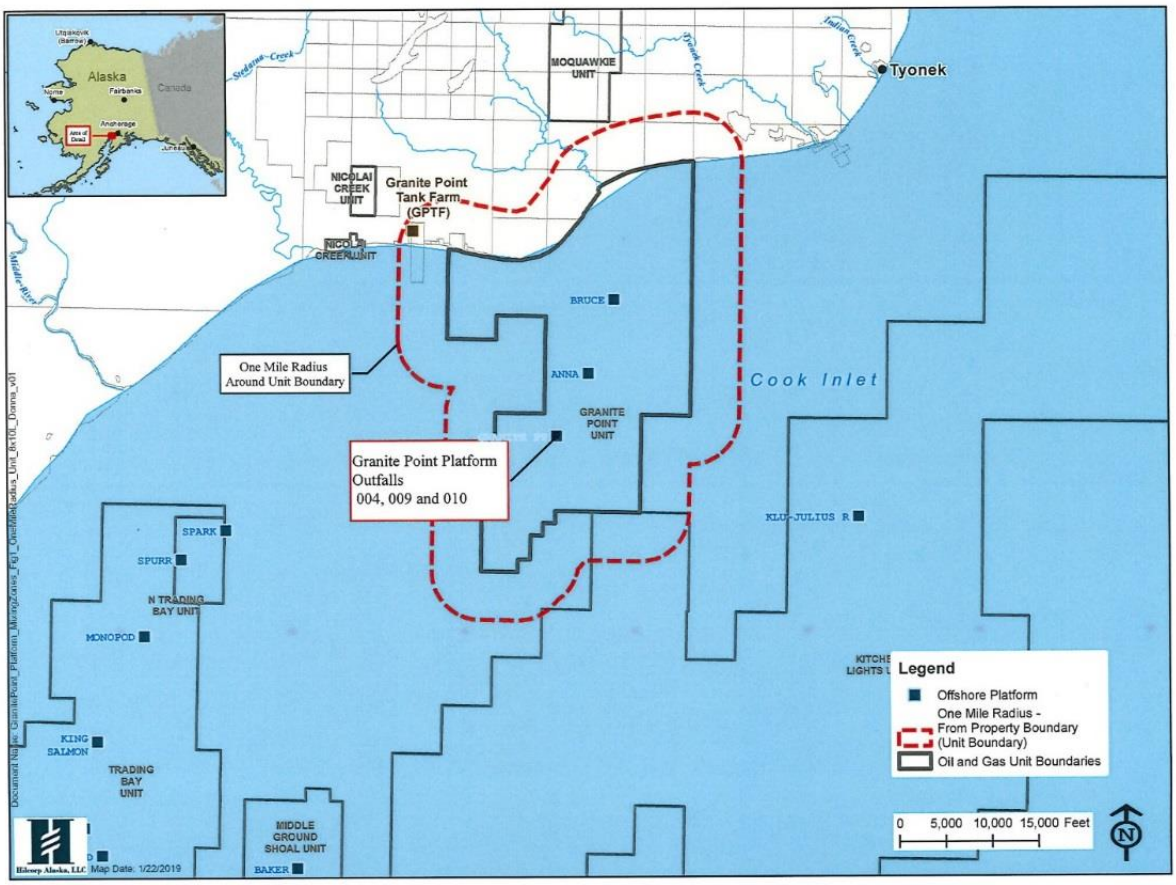

The GPP Supplemental Production Drilling Project (GPP Project) will involve moving the Spartan 151 MODU, or other similar MODU, to the site and cantilevering the MODU over the existing production platform. Since the Spartan 151 MODU will be physically located over GPP, the associated discharges are considered to be from GPP. Two discharges, noncontact cooling water and uncontaminated ballast water, are not authorized for GPP under the administratively extended AKG-31-5000 general permit. Although GPP is authorized to discharge graywater under AKG-31-5000, the Spartan 151 MODU will discharge graywater from a separate treatment unit, which requires a separate permit. These three wastewater discharges associated with the operation of the MODU require an individual APDES permit. The GPP Project is anticipated to be completed during the 2019 drilling season.

2.2 Facility

The Spartan 151 MODU has been tentatively selected by Hilcorp for the GPP Project. The Spartan 151 is a 150-foot (46 meters) long independent leg/cantilever jack-up MODU with three triangular 250-foot (76 meters) long truss-type legs, and is classified as A-1 Self-Elevating. The Spartan 151 was designed and constructed by Bethlehem Steel Corporation in 1981 and was completely refurbished and upgraded in 2006. The operating non-hurricane conditions for the Spartan 151 is limited to a maximum water depth of 150 feet (46 meters) with a minimum water depth of 12 feet (4 meters) and wind speeds of 70 knots with wave heights to 35 feet (10 meters). The hurricane survival operating condition limits are a maximum water depth of 130 feet (40 meters) and wind

speeds of up to 100 knots with wave heights up to 45 feet (14 meters). Although the Spartan 151 is tentatively selected for the GPP Project, Hilcorp may substitute a different MODU so long as the discharge characteristics are similar to that from the Spartan 151 as characterized in this fact sheet and application.

2.3 Requested Discharges

During the effective period of the Permit, the permittee requests authorization to discharge pollutants associated with oil and gas production drilling at the GPP located in Cook Inlet. The application submitted by Hilcorp identifies those discharges and pollutants resulting from facility processes, waste streams, and operations that are requested to be authorized in the Permit. The following wastewater discharges have been requested by Hilcorp:

DISCHARGE NUMBER	DESCRIPTION
004	Graywater
009	Noncontact Cooling Water
010	Uncontaminated Ballast Water

2.4 Discharge Location

The discharge location is limited to the GPP location within the Granite Point lease area in Upper Cook Inlet just south of Granite Point, approximately 5,200 meters from the Trading Bay SGR. The GPP is in approximately 24 meters of water based on the mean lower low water (MLLW). The 2007 GP prohibited all discharges shoreward of 5-meter isobaths. However, the GPP is located seaward of the 5-meter isobaths and this prohibition would not be applicable to the GPP Project. The map in Figure 1 shows the location of the GPP Project site.

3 WASTEWATER CHARACTERIZATION

Characterization of the discharges requested by the applicant are described in this section. Descriptions are structured to provide a general description first followed by specific information pertinent to discharges as described by the application process and authorized under the Permit.

Graywater (Discharge 004)

Graywater includes wastewater from kitchens, showers, and laundry facilities. The parameters of concern are five-day biochemical oxygen demand (BOD_5), total suspended solids (TSS), total residual chlorine (TRC), and floating materials including solids, foam, garbage, and oily sheens. The Spartan 151 will generate graywater and black water, both considered domestic wastewater per 18 AAC 72. Black water will be containerized and transported to an appropriate onshore facility for treatment and disposal, but the applicant proposes to treat and discharge graywater under the Permit. Note that graywater is considered domestic wastewater and is held to the same treatment requirements by 18 AAC 72, unless a waiver for secondary treatment is requested and approved. Per 18 AAC 72.050-060 graywater must receive at least primary treatment prior to being discharged even if a waiver is granted from secondary standards. Primary treatment is defined as attaining 30 percent (%) reduction in BOD_5 and TSS per 18 AAC 72.990(50).

Graywater will be treated on board using OMNIPURE marine sanitation devices (MSDs) equipped with electrochemical oxidation/ disinfection, dechlorinating unit, and filtration prior to being discharged into Cook Inlet. The discharge flow rate is 3.64 gallons per minute (gpm) or 5,250 gallons per day (gpd) and the discharge port is approximately 40 feet (12 meters) above the water surface. The treatment of graywater using the MSDs on the Spartan 151 has been demonstrated to exceed primary treatment requirements, and the operator has successfully obtained a waiver to

secondary treatment standards from DEC. Therefore the discharge of treated graywater is eligible for inclusion under the Permit. Because the MSDs include chlorination and dechlorination, the primary water quality POC is TRC and is included in the mixing zone analysis in Section 4.3. See Figure 2: Graywater Treatment System.

Figure 2: Graywater Treatment System

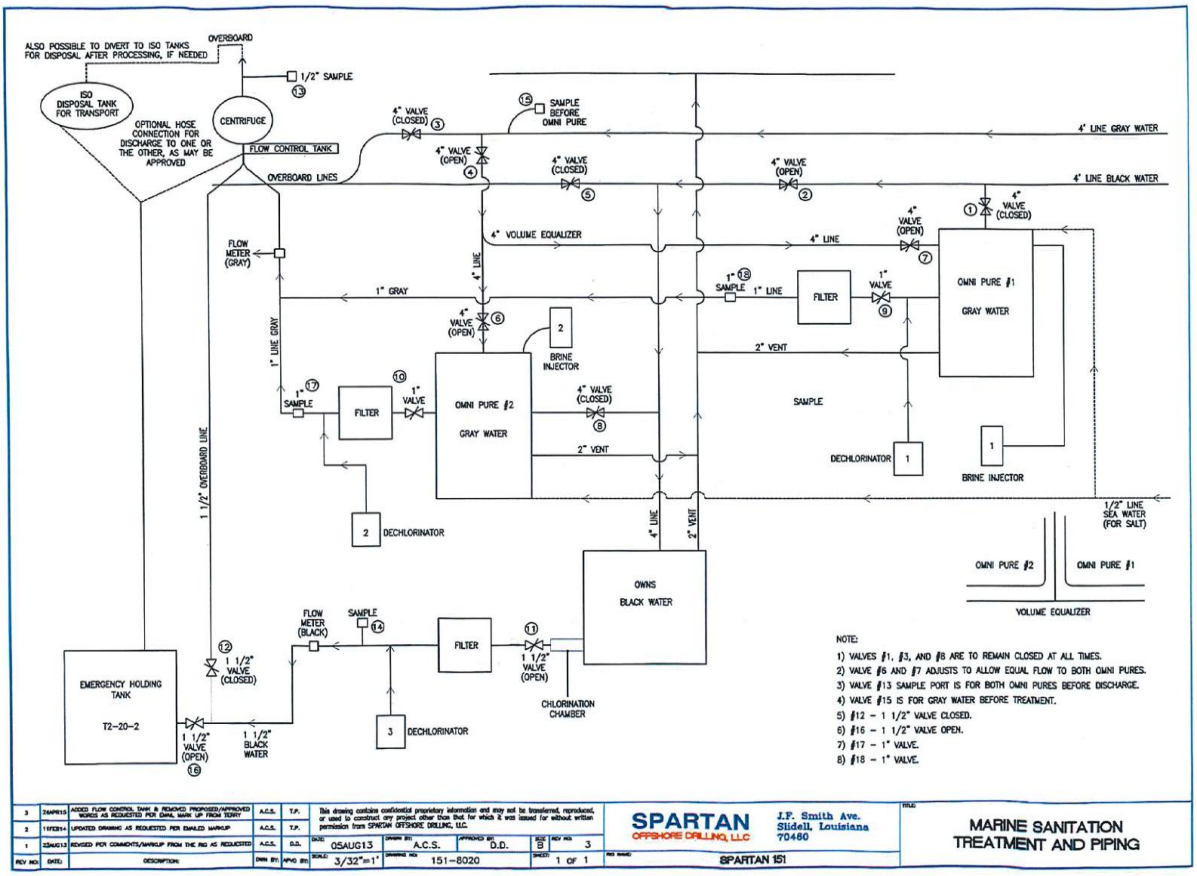

3.2 Non-Contact Cooling Water (Discharge 009)

For the Permit, noncontact cooling water is seawater used for once-through cooling of the MODU drawwork brakes through a heat exchanger, and is discharged overboard. The drawworks on the Spartan 151 are Mid-Continent U-1220 driven by two GE 752 DC motors each rated at 1000 HP (intermittent) complete with Elmagco 7838 electric brakes. Noncontact cooling water has the potential to be 12-27 degrees Celsius (°C) or 53-80 Degrees Fahrenheit (°F) warmer than the receiving water, generally 0-12 °C (32-53 °F). Although the total seawater intake is 283 gpm, only 92 gpm (130,000 gpd) is routed through heat exchangers; 75 % of the intake bypasses the heat exchangers to limit the operating pressure of the system. Hence, only 25 % of the discharge experiences a temperature increase prior to discharge. No chemical additives have been proposed in the application based on using the Spartan 151, but use of biocides or corrosion inhibitors is common and could be used if a substitute MODU is ultimately used for the GPP Project. Therefore, the POCs for noncontact cooling water include temperature and chronic toxicity. To account for temperature and chronic toxicity, a mixing zone is evaluated in Section 4.3. See Figure 3: Noncontact Cooling Water System.

Figure 3: Noncontact Cooling Water System

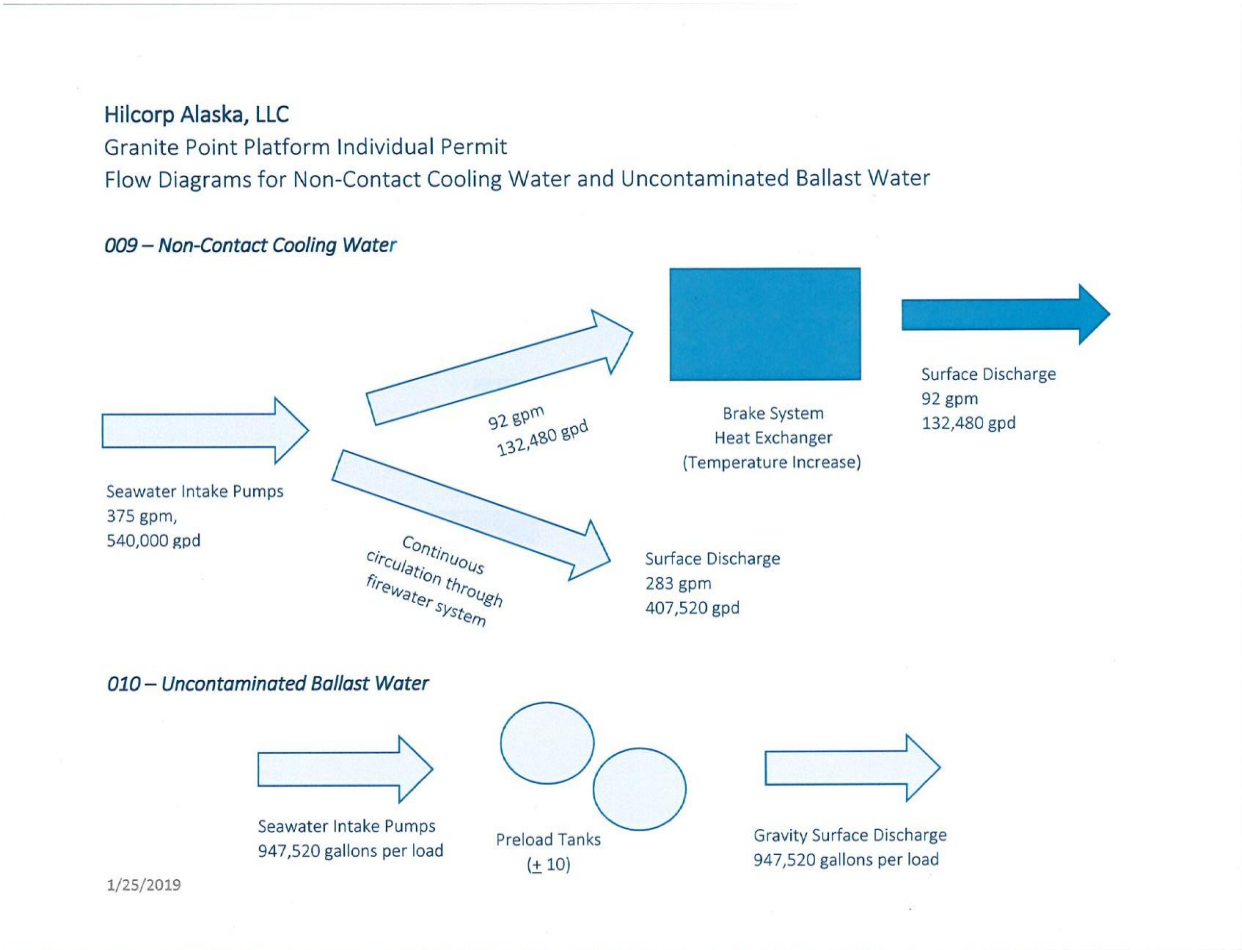

3.3 Uncontaminated Ballast Water (Discharge 010)

Ballast water is seawater that is taken into a vessel hull to maintain the proper floater level and ship draft for stabilization in deeper waters, or for setting the MODU legs onto the sea floor prior to exploration drilling. In this case, the ballast water will be taken on during the pre-loading of the legs, which can last between 12 and 36 hours. Once the MODU is in place and pinned to the sea floor, the ballast water is discharged. At least one discharge event is anticipated for preload water necessary to set the legs of the Spartan 151 on location. However, these discharges may occur multiple times during a drilling program if the MODU is repositioned or reset, making the discharges intermittent. Application details provide an estimated volume of 21,162 barrels (bbl) or 0.889 million gallons per day (mgd) for each positioning attempt at a well location.

In legacy vessels, ballast water was often combined with other vessel wastewater but this is not the case in newer vessels, such as the Spartan 151. Uncontaminated ballast water is seawater that has been taken into a vessel hull and has not been comingled with bilge or other wastes. Because a different MODU could conceivably be used, characterization of this discharge includes potential contamination by hydrocarbons (visible sheen). Table 1 provides a summary of the frequency, duration, and discharge volumes anticipated for the GPP Project.

3.4 Summary of Requested Discharges and Volume Estimates

Table 1: Requested Discharges and Estimated Volumes

#	Discharge	Frequency		Flow or Volume			
		Days /Week *(avg)*	Months /Year *(avg)*	Max Daily Flow Rate *(mgd)*	Max Total Daily Volume (bbls)	Max Total Annual Volume (bbls)	Duration *(days)*
004	Graywater	7	6	0.0053	126	22,714	180
009	Noncontact Cooling Water (25%)	7	6	0.1325	3,155	570,000	180
009	Noncontact Cooling Water (75%)	7	6	0.4074	9,700	1,746,000	180
010	Uncontaminated Ballast Water	1	<1	0.8888	21,162	21,162	1

4 RECEIVING WATERS

Water Quality Standards

Section 301(b)(1)(C) of the CWA requires the development of limits in permits necessary to meet water quality criteria (WQS) by July 1, 1977. Per 18 AAC 83.435, conditions are required in APDES permits to ensure compliance with applicable water quality standards (WQS) in 18 AAC 70. The WQS are composed of use classifications, numeric and/or narrative water quality criteria, and an anti-degradation policy. The use classification system designates the beneficial uses that each waterbody is expected to achieve. The numeric and/or narrative water quality criteria are the criteria deemed necessary by the state to support the beneficial use classification of each waterbody. The receiving waters covered by the Permit are marine waters of the US located in the State of Alaska. Marine waters are classified per 18 AAC 70.020(a)(2) as Classes (2)(A), (B), (C), and (D) for use in aquaculture, seafood processing, and industrial water supply contact and secondary recreation growth and propagation of fish, shellfish, other aquatic life, and wildlife and harvesting for consumption of raw mollusks or other raw aquatic life. The Department has determined that all of the marine use classes must be protected in state waters in Cook Inlet.

Waterbodies in Alaska are designated for all uses unless the water has been reclassified under 18 AAC 70.230 as listed under 18 AAC 70.230(e). Some waterbodies in Alaska can also have site-specific water quality criterion per 18 AAC 70.235, such as those listed under 18 AAC 70.236(b). The Department has determined that there has been no reclassification nor has site-specific water quality criteria been established for the Cook Inlet at the location of the discharges requested by the applicant.

4.2 Water Quality Status of Receiving Water

Any part of a waterbody for which the water quality does not, or is not expected to, intrinsically meet applicable water quality criteria is defined as a “water quality limited segment” and placed on the state’s impaired waterbody list. For an impaired waterbody, Section 303(d) of the CWA requires states to develop a Total Maximum Daily Load (TMDL) management plan for the waterbody. The TMDL documents the amount of a pollutant a waterbody can assimilate without violating water quality criteria and allocates that load to known point sources and nonpoint sources. Cook Inlet is not included on the Final 2010 Alaska Integrated Water Quality Monitoring and Assessment Report, July 15, 2010, as an impaired waterbody; nor is the subject waterbody listed as a CWA 303(d) waterbody as requiring or having a TMDL.

4.3 Mixing Zone Analysis

The Department may authorize a mixing zone under a permit upon receipt of a complete application per 18 AAC 70.260. The Permit application provides information required to verify compliance with this section and the mixing zone checklist (see ATTACHMENT 1. MIXING ZONE ANALYSIS CHECKLIST). A mixing zone may be authorized based on meeting all regulatory criteria, as described in this fact sheet, which includes consideration of the following: size of the mixing zone; treatment technology; existing uses of the waterbody; human consumption; spawning areas; human health; aquatic life; and endangered species. Subsequent Sections 4.3.1 through 4.3.8 describe the rational used to meet the mixing zone evaluation criteria.

4.3.1 Size

Per 18 AAC 70.255, the Department has determined that the authorized mixing zone sizes for the discharge listed in this section are appropriate based on comparison with empirical mixing zone studies and confirmation modeling of critical ambient and effluent conditions that meet mixing zone regulatory requirements. To ensure the discharge will not exceed the chronic whole effluent toxicity (WET) criteria of 1.0 chronic toxicity units (TU_c) per 18 AAC 70.030, the Department authorizes a standard 100-meter (m) radius mixing zone for noncontact cooling water. The 100-m chronic mixing zone accounts for the potential use of chemical additives that could impart chronic toxicity above 1.0 TU_c at the point of discharge. The thermal discharge from noncontact cooling water was verified by modeling to ensure water quality criteria for temperature would be met prior to the boundary of the 100-m chronic mixing zone that was sized for chronic toxicity. Lastly, given that graywater is being treated using an MSD, DEC authorizes acute and chronic mixing zones for graywater that are sized based on a maximum TRC concentration of 1 mg/L representing an appropriately operated MSD that dechlorinates prior to discharge. The authorized mixing zones are as follows:

- Discharge 004 – Graywater: DEC authorizes a 35-m radii chronic mixing zone and an 18-m radii acute mixing zone extending from the seafloor to the sea surface for TRC, with corresponding dilution factors of 77 and 134, respectively.
- Discharge 009 – Noncontact Cooling Water: DEC authorizes a standardized 100-m radii chronic mixing zone extending from the seafloor to the sea surface for TU_c and temperature, with a corresponding dilution factor of 189.

These mixing zones were established using previous modeling studies while making minor site-specific adjustments. The critical hydrodynamic ambient conditions at the Sabre project site was used by Kinnetics to model these discharges from Spartan 151. The critical currents were the 10th percentile low current conditions and the 90th percentile high current conditions, 0.2 meters per second (m/s) and 2.3 m/s, respectively. These critical currents are comparable to the critical ambient hydrodynamic conditions used by Parametrix for mixing zone modeling for the GPP Project site as described in Hilcorp's Cook Inlet General Permit (CIGP) application, which were 0.3 meters m/s and 2.4 m/s, respectively. The receiving water density profile used to model the Sabre site is that of slightly stratified, from 1014 to 1016 kg/m^3. At the GPP Project site, Parametrix used a surface density of 1015.3 kg/m3, and a bottom density of 1016.0 kg/m3 for their modeling efforts. DEC has reviewed the ambient receiving water conditions used for the GPP and Sabre Project modeling, and concludes that the critical conditions are similar but minor site-specific adjustments in the mixing zone evaluations were required. The following sections describe the sizing methodology using a combination of modeling and empirical data verified through modeling.

4.3.1.1 Graywater (004)

The flow rate for the Graywater Discharge (004) modeling performed by Kinnetics was based on the assumption that the total discharge would have a flow rate of 0.00023 m^3/s (i.e., 3.64 gpm or 5,250 gpd). The effluent concentration modeled for TRC is 1.0 mg/L, which has been observed to be a consistently attainable concentration after the dechlorination step of MSD treatment. The acute and chronic water quality criteria for TRC is 13.0 micrograms per liter (µg/l) and 7.5 µg/l, respectively.

DEC authorized a chronic mixing zone of 35 m and an acute mixing zone of 17 m for the Spartan 151 discharges for the Sabre project. However, modeling conducted by Parametrix for the GPP Project site supports an acute mixing zone of 18 m. Based on CORMIX modeling performed by Parametrix, and to be consistent with the standard mixing zone proposed in the Draft AKG315200 permit, DEC authorizes a chronic mixing zone for TRC in graywater of 35-m radius and an acute mixing zone of 18-m radius, with corresponding dilution factors of 77 and 133, respectively. Based on the minimum current of 0.3 m/s, a drifting organism is expected to traverse the acute mixing zone in 57 seconds (0.94 minutes). This is well below the 15 minutes typically used to ensure there is no lethality to drifting organisms per 18 AAC 70.255(b)(1).

4.3.1.2 Noncontact Cooling Water (009)

DEC authorizes a 100-m radius mixing zone for chronic toxicity and temperature for noncontact cooling water discharges. A chronic mixing zone is necessary for noncontact cooling water based on the potential use of chemical additives that could increase chronic toxicity above 1.0 TU_c at the point of discharge. Because the discharge will also have elevated temperature, the discharge was modeled in CORMIX to ensure water quality criteria for temperature would be met at the boundary of the 100-m mixing zone. Spartan 151-specific modeling conducted by Kinnetic to support of the Sabre project assumed a flow rate of 0.0058 m^3/s (92 gpm or 132,240 gpd). The temperature of the receiving water was modeled as 12° C (54° F) and the effluent temperature at 54°C (80° F). Based on critical receiving water and effluent conditions, the model predicted the temperature criteria would be met within the first 20 meters of the 100-m authorized chronic mixing zone. For chronic toxicity, the dilution factor applicable at the boundary of the authorized chronic mixing zone is 189, and represents the minimum dilution at the maximum effluent discharge and critical receiving water conditions. The 100 m chronic mixing zone and dilution factor of 189 authorized under this permit are consistent with the Spartan 151-specific mixing zone proposed in the Draft AKG315200.

Temperature data collected from the Spartan 151 over approximately four months of operation are summarized in Table 2. The average intake water was 11.8ºC, which is very close to the modeled ambient temperature. However, the average discharge temperature, was significantly lower than the 54ºC temperature used in the model. The maximum expected temperature calculated using the 2018 data is 22.36ºC, well below the 54ºC used for the Sabre modeling. In addition, the calculated maximum expected temperature is almost identical to the 23ºC discharge temperature assumption used by Parametrix to model noncontact cooling water discharges at the GPP site for the Hilcorp Cook Inlet General Permit mixing zone submittal. The new data indicate that the water quality criteria for temperature will be met within a few meters of the point of discharge, well within the authorized 100-m mixing zone.

Table 2: Summary of Spartan 151 2018 Temperature Data

Value	Discharge		Intake		Delta	
	ºF	ºC	ºF	ºC	ºF	ºC
Average	54.4	12.5	53.2	11.8	1.5	0.8
Maximum	61.7	16.5	58.5	14.7	7.6	4.2
Minimum	44.0	6.7	46.5	8.1	-2.4	-1.3

4.3.2 Technology

18 AAC 70.240(a)(3) requires the Department to determine if "an effluent or substance will be treated to remove, reduce, and disperse pollutants, using methods found by the Department to be the most effective and technologically and economically feasible, consistent with the highest statutory and regulatory treatment requirements" before authorizing a mixing zone.

Applicable "highest statutory and regulatory requirements" are defined in 18 AAC 70.990(30) [2003]. Accordingly, there are three parts to the definition, which are:

(1) Any federal TBEL identified in 40 CFR 125.3 and 40 CFR 122.29, as amended through August 15, 1997, adopted by reference at 18 AAC 83.010;

(2) Minimum treatment standards in 18 AAC 72.040; and

(3) Any treatment requirement imposed under another state law that is more stringent than the requirement of this chapter.

The first part of the definition includes all applicable TBELs based on ELGs or TBELs developed using case-by-case BPJ. DEC is relying on the ELGs for the Oil and Gas Extraction Point Source Category at 40 CFR Part 435 Subpart-D (Coastal Subcategory adopted by reference at 18 AAC 83.010(g)(3). These ELGs are applicable to the discharge of graywater, and prohibit the discharge of floating solids, foam, or garbage (See Section 5.2.1.1).

For graywater, the Department has also adopted TBELs using case-by-case BPJ (See Section 5.3.1); these are a limit of 1.0 mg/L TRC. For uncontaminated ballast, DEC compared a TBEL developed using case-by-case BPJ to the narrative water quality criteria for oil and grease (sheen) and determined the WQBEL was more stringent than the TBEL. For all discharges under the Permit, the Department has also imposed prohibitions, stringent source control measures, and BMP requirements. Specifically, the use of chemical dosing practices and pollution reduction strategies are required to be included in the best management practices plan (BMPs) for noncontact cooling water. The combination of source control, TBELs, and BMPs is the most effective and technologically and economically feasible method to control the pollutant discharges and represent the highest statutory and regulatory requirements.

The second part of the definition from the WQS appears to be in error, as 18 AAC 72.040 considers discharge of sewage to sewers and not minimum treatment. The correct reference appears to be 18 AAC 72.050, minimum treatment for domestic wastewater. Graywater is domestic wastewater that requires at least primary treatment and waiver of secondary treatment (18 AAC 72.060) to be discharge under the Permit. The permittee has satisfactorily demonstrated attainment of better than primary treatment using the MSDs and has obtained a waiver of secondary treatment from DEC (See Section 5.5).

The third part of the definition includes any treatment required by state law that is more stringent than 18 AAC 70. Other regulations beyond 18 AAC 70 that may apply to this permitting action include 18 AAC 83, 18 AAC 72 and 18 AAC 15. The Permit limitations, prohibitions, and BMP requirements are consistent with both 18 AAC 83 and 18 AAC 70. The application of 18 AAC 72 is

discussed in the preceding paragraph. Other than 18 AAC 72, neither the regulations in 18 AAC 15 nor another state legal requirement that the Department is aware of impose more stringent treatment requirements than 18 AAC 70.

4.3.3 Existing Use

Per 18 AAC 70.245(a), when determining the appropriate size of mixing zones, the Department must ensure that the existing uses of the waterbody outside the mixing zone are not partially nor completely eliminated and the overall biological integrity of the waterbody as whole is not impaired. Water quality criteria contained in WQS are developed to ensure the existing uses and biological integrity of the waterbody are protected. The Department has authorized a standard 100-m chronic mixing zone for discharges based on chronic toxicity and, when coupled with prohibitions and stringent BMP requirements, ensure water quality criteria is met at and beyond the boundary of the mixing zone. Similarly, a 35-m chronic mixing has been authorized for graywater to ensure water quality criteria for TRC is met at and beyond the boundary. Because water quality criteria are met at the boundary of the chronic mixing zones and the criteria are established to protect the existing uses and biological integrity of the waterbody, the mixing zones are appropriately sized and protective of the existing uses of the waterbody as a whole.

4.3.4 Human Consumption

Per 18 AAC 70.250(b)(2) and (b)(3), the subject pollutants will not produce objectionable color, taste, or odor in aquatic resources harvested for human consumption, nor will the discharge preclude or limit established processing activities or commercial, sport, personal use, or subsistence fish and shellfish harvesting. The discharges do not contain pollutants that are expected to produce objectionable color, taste, or odor in aquatic resources. The Department has determined that the discharges are not expected to result in precluding or limiting established processing activities or commercial, sport, personal use, or subsistence fish and shellfish harvesting.

4.3.5 Spawning Areas

Per 18 AAC 70.255(h), a mixing zone is not authorized in an area of anadromous fish spawning or resident fish spawning redds for Arctic grayling, northern pike, rainbow trout, brook trout, cutthroat trout, whitefish, sheefish, Arctic char (Dolly Varden), burbot, and landlocked Coho, king, and sockeye salmon. The Permit does not authorize the discharge of effluent to open waters of a freshwater lakes or rivers. Therefore, there are no associated discharges to anadromous fish or the resident freshwater fish spawning areas listed in the regulation.

4.3.6 Human Health

Per 18 AAC 70.250 and 18 AAC 70.255, the mixing zone shall be protective of human health. The chronic mixing zones authorized by the Permit have been sized to ensure human health criteria are met at the boundary. Per 18 AAC 70.250(a)(1)(A), available evidence must reasonably demonstrate that the pollutants discharged in an authorized mixing zone will not bioaccumulate. None of the discharges are expected to contain bioaccumulative chemicals.

For carcinogenic contaminants, 18 AAC 70.250(a)(1)(B) requires the Department to consider exposure pathways including exposure duration of affected aquatic organisms in the proposed mixing zone, and patterns of fisheries use and consumption of water, fish, or shellfish in the area. Similar to bioconcentration, the discharges are not expected to include pollutants that pose a carcinogenic risk.

4.3.7 Aquatic Life and Wildlife

Per 18 AAC 70.250(a)(2)(A-C), the mixing zone cannot cause an adverse impact on resident fish or shellfish spawning or rearing, form a barrier to migration, or fail to provide a zone of passage. Given these discharges are to the marine environment and there are no known shellfish beds in the vicinity, DEC concludes this requirement will be met. Per 18 AAC 70.250(b)(1) and (2), pollutants for which the mixing zone will be authorized must not result in undesirable or nuisance to aquatic life or produce objectionable color, taste, or odor in aquatic resources harvested for human consumption. The discharge of pollutants in the mixing zone will not create undesirable or nuisance aquatic life and there are no aquatic resources anticipated to be harvested in the vicinity of the mixing zone. Based on there being no lethality to drifting organisms (Section 4.3.1.1), low discharge volume at the seafloor, tidal fluctuations at the point of discharge, and short discharge durations, the Department concludes aquatic life and wildlife will be maintained and protected.

4.3.8 Endangered Species

Per 18 AAC 70.250(a)(2)(D), the mixing zone is not expected to cause an adverse effect on threatened or endangered species. Impacts to overall water quality, and any threatened or endangered species therein, are not expected based on the discharge characteristics and the rapid mixing associated with the extreme tidal fluctuations in the receiving water. The National Marine Fisheries Service (NMFS) and the United States Fish and Wildlife Service (FWS) indicated that there are two listed endangered species in Cook Inlet in the vicinity of the discharge: Cook Inlet Beluga Whale (*Delphinapterus leucas*) and Stellar Sea Lion (*Eumetopias jubatus*). See Section 10.1 for more information on endangered species.

5 EFFLUENT LIMIT DEVELOPMENTBasis for Permit Effluent Limits

18 AAC 83.015 prohibits the discharge of pollutants to waters of the U.S. unless first obtaining a permit authorized by the APDES Program that meets the purposes of Alaska Statutes 46.03 and in accordance with CWA Section 402 and the requirements adopted by reference at 18 AAC 83.010. Per these statutory and regulatory provisions, the Permit includes effluent limits that require the discharger to (1) meet standards reflecting levels of technological capability, (2) comply with WQS, and (3) comply with other state requirements that may be more stringent.

The CWA requires that the limits for a particular pollutant be the more stringent of either TBEL or WQBEL. TBELs are either set via EPA-rule makings in the form of ELGs that correspond to the level of treatment that is achievable using available technology, or through the development of TBELS using case-by-case BPJ. In establishing permit limits, DEC first determines which ELGs must be incorporated into the Permit and whether other TBELs using case-by-case BPJ should be adopted. DEC evaluated the effluent characteristics in Section 3 to determine if the discharge could result in exceedances, or contribute to exceedances, of the water quality criteria in the receiving water beyond the boundary of the authorized mixing zones. If exceedances could occur, water quality-based effluent limits (WQBELs) must be included in the Permit.

The limits in the Permit reflect whichever requirements (technology-based or water quality-based) are more stringent. The Permit contains TBELs per 40 CFR Part 435, TBELs developed using case-by-case BPJ, and WQBELs as described in the following sections.

5.2 TBELs Based on ELGs

EPA has promulgated national ELGs for the Oil and Gas Extraction Point Source Category at 40 CFR Part 435 Subpart D (Coastal Subcategory). DEC adopted the ELGs by reference at 18 AAC 83.010(g)(3). These subparts specify Best Available Technology Economically Achievable

(BAT); or Best Conventional Pollutant Control Technology (BCT); or Best Practicable Control Technology Currently Available (BPT), and New Source Performance Standards (NSPS). The following sections describe the applicable TBELs evaluated in Permit limit derivation.

5.2.1 Graywater (004)

5.2.1.1 No Floating Solids, Foam, or Garbage

The ELGs prohibit the discharge of foam per 40 CFR 435.43 (BAT) and floating solids and garbage per 40 CFR 435.44 (BCT). In addition to these ELG TBELs, DEC also applies a TBEL using case-by-case BPJ per Section 5.3.1 and other requirements based on 18 AAC 72 per Section 5.5.

5.3 TBELs based on Case-by-Case Best Professional Judgment

In situations where ELGs have not been developed, or have not considered specific discharges or pollutants, a regulatory agency can develop case-by-case TBELs based on BPJ using the same performance-based approach applied to develop national ELGs. Per CWA Section 402, developing limits using case-by-case BPJ requires the permitting authority to consider key aspects including: the age of equipment and facilities involved; the process employed; the engineering aspects of the application of various types of control techniques; process changes; the cost of achieving such effluent reduction; non-water quality environmental impacts (including energy requirements); the cost of implementing these conditions relative to the environmental benefits achievable; and other factors as deemed appropriate.

The Permit contains TBELs developed using case-by-case BPJ for graywater (004) and uncontaminated ballast water (010). The following sections describe the case-by-case TBELs developed using BPJ by and approved by the Department for use in the permit.

5.3.1 Total Residual Chlorine – Graywater (004)

The Department has established a TBEL using case-by-case BPJ for a unique situation for the Spartan 151, which uses an MSD to provide greater than primary treatment per Section 5.5. The MSD uses chlorination followed by dechlorination. DEC considers dechlorination a required technology and establishes a case-by-case TBEL using BPJ for TRC of 1.0 mg/L maximum downstream of the dechlorination system. However, this TBEL developed using case-by-case BPJ only applies to situations where an MSD is being used to treat graywater. Otherwise, this limit does not apply. Because DEC regulations consider graywater to be domestic wastewater, this TBEL using case-by-case BPJ is consistent with limits applied as if it were blackwater being treated in the MSD. To help ensure the 1.0 mg/L TRC limit is consistently attained, the Permit requires development of specific BMPs for the operation of the dechlorination system.

5.3.2 No free oil – Miscellaneous Discharges (009, 010)

The discharge of uncontaminated ballast water is controlled via TBELs developed using case-by-case BPJ for no discharge of free oil. If ballast water is deemed to be contaminated (i.e., visible sheen), it must be processed through an oil-water separator (OWS) or other oil removal methods and subject to the Static Sheen Test prior to discharge. Limitations for this discharge was not specifically included in the ELGs and has been developed using case-by-case BPJ during the development of previous oil and gas permits for miscellaneous discharges. Note that the definition for no discharge of free oil in 40 CFR 435.41(y) includes miscellaneous discharges, but miscellaneous discharges are not specifically defined. Hence, this limitation appears consistent with the ELGs, and has been previously vetted in other Cook Inlet oil and gas APDES permits based on consideration of aspects of CWA Section 402. The no discharge of free oil TBEL is compared to a narrative water quality criteria in Section 5.4.2.

Noncontact cooling water is not expected to contain oil as this waste stream does not contact either the production stream (i.e., oil, water, or gas from the hydrocarbon formation) or machinery surfaces where oily wastes are likely to contaminate them. However, use of chemicals for corrosion control is commonly used. For this reason, specific BMPs are required to help ensure compliance with chronic toxicity criteria should the particular MODU used for the GPP Project use chemical additives in the noncontact cooling water system (See Section 3.2).

5.4 Water Quality-Based Effluent Limits

CWA Section 301(b)(1) requires the establishment of limits in permits necessary to meet WQS by July 1, 1977. All discharges to state waters must comply with WQS, including the Antidegradation Policy. Per 18 AAC 83.435(a)(1), APDES permits must include conditions to meet any applicable requirement in addition to, or more stringent than, TBELs (e.g., WQBELs) that "achieve WQSs established under CWA Section 303, including State narrative criteria for water quality." The following sections discuss the WQBELs meeting 18 AAC 83.435 requirements.

5.4.1 Oil and Grease (Visible Sheen) – Graywater (004)

The ELGs applicable to graywater (i.e., domestic waste in 40 CFR 435) do not specifically prohibit the discharge of oil. Water quality criteria per 18 AAC 70.020(17), however, require that there be no concentrations of petroleum hydrocarbons, animal fats, or vegetable oils, and that surface waters be free from floating oil, film, sheen or discoloration. Accordingly, the Permit includes a narrative WQBEL for oil and grease (visible sheen) in graywater discharges and specific BMPs to help ensure oil and grease is controlled appropriately at the source.

5.4.2 Oil and Grease (Visible Sheen) – Uncontaminated Ballast Water (010)

Water quality criteria per 18 AAC 70.020(17) discussed in Section 5.4.1, is compared to the no free oil limitation in Section 5.3.2. Because the narrative water quality criteria has a broader emphasis (i.e., includes shorelines and bottom sediments), DEC concludes the WQBEL is more stringent than the TBEL developed using case-by-case BPJ and is used as the final limitation in the Permit.

5.5 Secondary Treatment Requirements and Waivers per 18 AAC 72

Prior to discharging graywater under the Permit, the Spartan 151, or any other MODU ultimately used, must comply with the most recent version of 18 AAC 72. The following discussion is based on the version of 18 AAC 72 current as of the effective date of the Permit. The permittee may be responsible for reviewing and complying with any subsequent version that becomes available during the term of the Permit.

The Permit defines graywater per 18 AAC 72.990(35) as wastewater from laundry, kitchen, sink, shower, bath or other domestic source that does not contain excrement, urine, or combined storm water. This definition is consistent with 40 CFR 435.41(l) for domestic waste (i.e., graywater): “the materials discharged from sinks, showers, laundries, safety showers, eye-wash stations, hand-wash stations, fish cleaning stations, and galleys. Note that the definition of domestic wastewater per 18 AAC 72.990(23) does not distinguish graywater and blackwater differently; both graywater and blackwater have the same requirements under 18 AAC 72. Whereas, 40 CFR Part 435 regulates sanitary waste (i.e., blackwater) differently than graywater. Because graywater is considered a component of domestic wastewater under state regulation, graywater by itself is subject to the same regulatory requirements as domestic wastewater that contains blackwater only, or commingled black and graywater. Specifically, it is important to note that per 18 AAC 72.050, domestic wastewater discharges must meet minimum treatment requirements (i.e., secondary treatment as

defined in 18 AAC 72.990(59) unless a waiver from minimum treatment is granted by the Department under 18 AAC 72.060.

In order to obtain a waiver from secondary treatment requirements, graywater must receive at least a primary treatment (as defined in 18 AAC 72) and be demonstrated not to cause adverse impacts in the receiving environment or pose human health concerns. The Spartan 151 treats graywater using an MSD, which achieves greater than primary treatment. The operator of Spartan 151 has successfully submitted characterization data with a request to DEC and has obtained a waiver to minimum treatment and can discharge graywater under the Permit. Similarly, if an alternative MODU is ultimately used under the Permit, it too must comply with the most current version of 18 AAC 72.

6 EFFLUENT LIMITS AND MONITORING REQUIREMENTS

In accordance with AS 46.03.110(d), the Department may specify the terms and conditions for discharging wastewater in a permit. The Permit includes WQBELs and TBELs derived from ELGs and case-by-case BPJ as described in Section 5. The sections describe the specific effluent limits and monitoring requirements for each discharge authorized by the Permit. **Effluent Limits and Monitoring Requirements for Graywater (004)**

Graywater is considered domestic wastewater and is held to the same treatment requirements per 18 AAC 72, unless a waiver of secondary treatment is requested and approved. Accordingly, any MODU covered under the Permit must satisfy the requirements in the most recent version of 18 AAC 72. The Spartan 151 has obtained a waiver from secondary treatment from DEC.

Table 3: Effluent Limits and Monitoring Requirements for Graywater (004)

Parameter (Unit)	Effluent Limitations	Monitoring Requirements	
		Frequency	Type
Total Monthly Volume (mg) [6.1.1]	Report	Monthly	Estimate or Measured
Floating solids, foam, garbage [6.1.2]	No Discharge	Daily	Observation
Oil and grease (visible sheen) [6.1.3]	No Discharge	Daily	Observation
TRC (mg/L) [6.1.4]	Maximum 1.0	Monthly	Grab

6.1.1 Flow

The Permit requires effluent flow volume to be to measured or estimated for each month a discharge occurs with the total monthly volume reported on the DMR.

6.1.2 Floating Solids, Foam, and Garbage

The Permit prohibits floating solids, foam, and garbage and requires a visual observation of the receiving water surface at a minimum frequency of once per day during daylight at the time of maximum estimated discharge (e.g., following morning or midday meals). Monitoring of the observations must be recorded in daily operating logs and made available upon request by DEC.

6.1.3 Oil and Grease (Visible Sheen)

The Permit prohibits the discharge of oil and grease as determined by a visible sheen on the receiving water surface per 18 AAC 70.020(17). Receiving water observations must be conducted once per day during daylight at the time of maximum estimated discharge (e.g., following morning or midday meals). Observations must be recorded in daily operating logs and made available upon request by DEC. To support this narrative limit, the permittee must develop specific housekeeping BMPs to minimize introduction of oil and grease at the source.

6.1.4 Total Residual Chlorine Maximum

For MODUs that use an MSD to treat graywater to greater than primary treatment, the Permit establishes a maximum limit on the TRC concentration of 1.0 mg/L, after dechlorination and prior to discharge. The permittee must develop specific BMPs to ensure proper operation and maintenance of the dechlorination system. If the MODU uses a treatment system other than an MSD to meet the primary treatment requirement, the 1.0 mg/L maximum TRC limit and specific BMPs do not apply.

6.1.4.1 Discharge Specific BMPs

To support the narrative limits for floating solids, foam, garbage, and oil and grease the permittee must develop specific housekeeping BMPs to minimize introduction of deleterious substances at the source. For graywater discharges treated with MSDs, the permittee must also develop specific BMPs to ensure proper operation and maintenance of the dechlorination system.

6.2 Effluent Limits and Monitoring Requirements for Miscellaneous Discharges (009, 010)

The monitoring and reporting requirements listed in Table 4 apply to the discharges of noncontact cooling water (009) and uncontaminated ballast water (010). These discharges must comply with the following effluent limitations and monitoring requirements.

Table 4: Effluent Limits and Monitoring for Miscellaneous Discharges (009 and 010)

Parameter	Effluent Limitations	Monitoring Requirements	
		Frequency	Type
Daily Flow (mgd) [6.2.1]	Report	Daily	Measure or Estimate
Oil and Grease (Sheen) [6.2.2]	No Discharge	Daily	Visual
Chronic WET [6.2.3, 6.2.4 and 6.3]	Report	Once/Year	Grab

6.2.1 Flow

The Permit requires the average flow and maximum daily effluent flow for a given month to be to measured, or estimated, and reported on the DMR. Daily flow measurement must be conducted on a consistent basis (approximately at the same time daily) and recorded in a log and made available to DEC upon request. For noncontact cooling water (009), if chemicals have been added and the 24-hour flow volume is greater than 10,000 gpd or 0.010 mgd, the permittee must conduct chronic WET monitoring by collecting a grab sample that is representative of the chemically treated effluent per Section 6.2.4 and conduct a chemical inventory per Section 6.3.

6.2.2 Oil and Grease (Sheen)

The prohibition of oil and grease (sheen) applies to discharges of uncontaminated ballast water (010) based on observation of a visible sheen on the water surface during slack tide while discharging or by Static Sheen Test at the permittee's option. The permittee must ensure that ballast water contaminated with oil and grease is processed through an OWS, or similar process, prior to discharge. For discharges of uncontaminated ballast water, the permittee must develop specific BMPs to support the no discharge of free oil limitation.

6.2.3 Chemical Use Optimization and Inventory

The permittee is allowed to use chemical additives in Noncontact Cooling Water (009) but in a manner that does not exceed the most stringent of the following three constraints:

- The maximum concentrations and any other conditions specified in the EPA product registration labeling if the chemical is an EPA registered chemical;

- The maximum manufacturer's recommended concentration;
- 500 mg/L; or
- The estimated chronic toxicity based on the mixed concentration of the chemical(s) in the waste stream may not be greater than 189 TUc based on the most limiting 25 % effect concentration (EC25) listed from the aquatic toxicological information obtained in the Safety Data Sheet (SDS) for the chemical, if available. Note that when only acute toxicity data is provided on an SDS, the permittee must use a reported acute to chronic ratio (ACR) for that chemical and species, or a default ACR of 10, to estimate the TUc of the mixture. If no toxicological information is available, the chemical is not included in the estimate.

Per this Section, the permittee must maintain a precise chemical inventory of all constituents added to the discharge, including the time, dose, and frequency of each chemical additive used and actually discharged. The permittee must submit these inventory records to DEC annually by January 31 of each year.

6.2.4 Specific Pollution Reduction BMPs and BMP Revision Action Level

For noncontact cooling water (Discharge 009), the permittee must develop and implement a chemical dosing BMP to optimize the use of chemicals and to minimize the potential for chronic toxicity in miscellaneous discharges per Section 6.2.3. This requirement applies to any individual, or commingled, discharge of noncontact cooling water that has chemical additives and discharges greater than 10,000 gallons per day. This permit establishes a Pollution Reduction (PR) BMP Action Level of 189 TU_c. The permittee must make revisions to existing BMPs should any single chronic WET result exceed the PR BMP Revision Action Level.

If a PR BMP Revision Action Level is exceeded, the permittee must revise the BMP to achieve less toxicity. These BMPs could be operational or physical modifications to the chemical dosing system. Exceeding a PR BMP Revision Action Level also initiates a requirement for the permittee to evaluate the system and initiate an update to line drawings as part of the BMP Plan revision.

The permittee must notify DEC in writing within one week of obtaining chronic WET results that exceed a chronic WET PR BMP Revision Action Level, and submit a letter within 60 days specifying what BMP revisions will be implemented prior to the next scheduled chronic WET monitoring event. If BMPs require modification to the physical system, updated line diagrams must be developed and submitted to DEC as an attachment to the letter. The revised BMP must be implemented to satisfy compliance with this specific BMP requirement for pollution reduction. Revisions must continue until the PR BMP Plan Action Level is achieved.

6.3 Chronic WET Monitoring Requirements

Chronic WET monitoring applies to the discharge of noncontact cooling water if chemical additives are used and greater than 10,000 gpd (0.010 mgd) is discharged over a 24-hour period, including discharges that may be commingled and discharged accumulatively. If required by the Permit, chronic WET testing of the invertebrate species listed below must be conducted once per year:

- Invertebrate: For larval development tests, the permittee shall use bivalve species *Crassostrea gigas* (Pacific Oyster) or *Mytilus sp.* (mussel). Testing shall also include *Americamysis bahia* (formally *Mysidopsis bahia*, mysid shrimp) for survival and growth. Due to seasonal variability, testing may be performed during reliable spawning periods (e.g. December through February for mussels and June through August for oysters).

A series of at least five dilutions including the lowest acceptable critical dilution (1.0 %) and a control must be tested. The recommended initial dilution series is 0.5, 1.0, 3.125, 6.25, 12.5, 25, 50, and 75% (or highest hypersaline dilution per applicable test method) along with a control of dilution water (0% effluent). However, the permittee may request written approval from DEC to modify the dilution series.

The presence of chronic toxicity shall be estimated as specified in EPA Short-Term Methods for Estimating the Chronic Toxicity of Effluents and Receiving Waters to Marine and Estuarine Organisms, Third Edition (EPA-821-R-02-014). For the bivalve species, chronic toxicity must be estimated as specified in Short-Term Methods for Estimating the Chronic Toxicity of Effluents and Receiving Water to West Coast Marine and Estuarine Organisms (EPA/600/R-95/136). Both the NOEC and 25 percent inhibition concentration (IC_{25}) must be provided in the full WET report. The chronic toxicity results reported on the DMR must use $TU_c = 100/EC_{25}$ or $100/IC_{25}$. The reported EC_{25} or IC_{25} must be the lowest point estimate calculated for the applicable survival, growth or embryo development endpoints. If the endpoint is estimated to be above the highest dilution, the permittee must indicate this on the DMR by reporting a less than value for TU_c based on the highest dilution. The Department may compare the reported TU_c based on IC_{25} with one based on NOEC during evaluation of data during the next permit reissuance. Although acute WET monitoring is not required, the permittee must estimate acute toxicity based on observations of mortality during chronic tests and include this information in the WET report.

The logistics of shipping WET samples to the lower 48 can be challenging as poor weather delays or missed connections during shipping can result in violation of the standard 36-hour hold time. If extenuating circumstances occur, WET samples hold times can exceed 36 hours but must not exceed 72 hours. The permittee must document the conditions that resulted in the need for the holding time to exceed 36 hours and any potential effect the extended hold time could have on the test results.

6.4 Additional Effluent Monitoring

DEC may require additional monitoring of effluent or receiving water for facility or site-specific purposes, including, but not limited to: obtaining data to support NOI or applications, demonstrating of water quality protection, obtaining data to evaluate ambient water quality, evaluating causes for elevated parameters in the effluent, and conducting chronic WET toxicity identification and reduction. If additional monitoring is required, DEC will provide the permittee or applicant the request in writing.

The permittee also has the option of taking more frequent samples than required under the Permit. These additional samples must be used for averaging if they are conducted using the Department approved test methods (generally found in 18 AAC 70 and 40 CFR 136 [adopted by reference in 18 AAC 83.010]). The results of any additional monitoring must be included in the calculation and reporting of the data on DMRs as required by the Permit and Standard Conditions Part 3.2 and 3.3 (Permit Appendix A).

Monitoring for effluent limitations must use methods with method detection limits that are less than the effluent limitations or are sufficiently sensitive. Monitoring effluent or receiving water for the purpose of comparing to water quality criteria must use methods with detection limits that are less than the applicable criteria or are sufficiently sensitive. Per 40 CFR 122.21(a)(3), a method approved under 40 CFR 136 is sufficiently sensitive when:

(A) The method minimum level (ML) is at or below the level of the applicable water quality criterion for the measured parameter, or

(B) The method ML is above the applicable water quality criterion, but the amount of the pollutant or pollutant parameter in the discharge is high enough that the method detects and quantifies the level of the pollutant or pollutant parameter in the discharge (e.g., not applicable to effluent or receiving water monitored for characterization), or

(C) The method has the lowest ML of the analytical methods approved under 40 CFR 136 for the measured pollutant or pollutant parameter (e.g., the receiving water concentration or the criteria for a given pollutant or pollutant parameter is at or near the method with the lowest ML).

6.5 Electronic Discharge Monitoring Reports

6.5.1 E-Reporting Rule - Phase I

The permittee must submit a DMR for each month by the 28th day of the following month. DMRs shall be submitted electronically through NetDMR per Phase I of the E Reporting Rule (40 CFR 127). For access to the NetDMR Portal, go to https://cdxnodengn.epa.gov/oeca-netdmr-web/action/login. DMRs submitted in compliance with the E-Reporting Rule are not required to be submitted as described in Appendix A – Standard Conditions unless requested or approved by the Department. Any DMR data required by the Permit that cannot be reported in a NetDMR field (e.g., full WET Reports, mixing zone receiving water data, etc…), shall be included as an attachment to the NetDMR submittal. DEC has established an e-Reporting Information website at http://dec.alaska.gov/water/compliance/electronic-reporting-rule/ which contains general information about this new reporting format. Training modules and webinars for NetDMR can be found at https://netdmr.zendesk.com/home.

6.5.2 E-Reporting Rule - Phase II (Other Reports).

Phase II of the E-Reporting rule will integrate electronic reporting for all other reports required by the Permit (e.g., Annual Reports and Certifications) and implementation is expected to begin during the permit cycle. Permittees should monitor DEC's E-Reporting website at http://dec.alaska.gov/water/compliance/electronic-reporting-rule/ for updates on Phase II of the E-Reporting Rule and will be notified when they must begin submitting all other reports electronically. Until such time, other reports required by the Permit may be submitted in accordance with Appendix A – Standard Conditions.

7 ANTIBACKSLIDING

Per 18 AAC 83.480, a reissued permt requires that "…effluent limitations, standards, or conditions must be at least as stringent as the final effluent limitations, standards, or conditions in the previous permit." Per 18 AAC 83.480(c), also states that a permit may not be reissued "to contain an effluent limitation that is less stringent than required by ELGs in effect at the time the Permit is renewed or reissued."

Effluent limitations may be relaxed as allowed under 18 AAC 83.480, CWA 402(o) and CWA 303(d)(4). 18 AAC 83.480(b) allows relaxed limitations in renewed, reissued, or modified permits when there have been material and substantial alterations or additions to the permitted facility that justify the relaxation or if the Department determines that technical mistakes were made.

CWA 303(d)(4)(A) states that, for waterbodies where the water quality does not meet applicable WQS, effluent limitations may be revised under two conditions: the revised effluent limitation must

ensure the attainment of the WQS (based on the waterbody TMDL or the waste load allocation); or the designated use which is not being attained is removed in accordance with the WQS regulations.

CWA 303(d)(4)(B) states that, for waterbodies where the water quality meets or exceeds the level necessary to support the waterbody's designated uses, WQBELs may be revised as long as the revision is consistent with the State's Antidegradation Policy. Even if the requirements of CWA 303(d)(4) or 18 AAC 83.480(b) are satisfied, 18 AAC 83.480(c) prohibits relaxed limits that would result in violations of WQS or ELGs.

State regulation 18 AAC 83.480(b) only applies to effluent limitations established on the basis of CWA 402(a)(1)(B), and modification of such limitations based on effluent guidelines that were issued under CWA 304(b). Accordingly, 18 AAC 83.480(b) applies to the relaxation of previously established TBELs based on ELGs or TBELs developed using case-by-case BPJ. To determine if backsliding is allowable under 18 AAC 83.480(b), the regulation provides five regulatory criteria (18 AAC 83.480(b)(1-5)) that must be evaluated and satisfied.

This is the first issuance of the Permit. Therefore, an antibacksliding analysis is not required.

8 ANTIDEGRADATION

8.1 Legal Basis

Section 303(d)(4) of the CWA states that for waterbodies where the water quality meets or exceeds the level necessary to support the designated uses of the waterbody, WQBELs may be revised as long as the revision is consistent with the State's Antidegradation Policy and implementation methods. Alaska's current Antidegradation Policy and Implementation Methods are presented in 18 AAC 70.015 Antidegradation Policy and in 18 AAC 70.016 Antidegradation Implementation Methods for discharges authorized under the federal Clean Water Act. The Antidegradation Policy and Implementation Methods have been amended through April 6, 2018, are consistent with 40 CFR 131.12, and were approved by EPA on July 26, 2018.

The following subsections document the Department's conformance with the Policy and Implementation Methods for reissuance of the Permit.

8.2 Receiving Water Status, Tier Determination, and Analysis Requirements

Per the Implementation Methods, the Department determines a Tier 1 or Tier 2 classification and protection level on a parameter-by-parameter basis for the waterbody. The Implementation Methods also describe a Tier 3 protection level applying to designated waters, although at this time no Tier 3 waters have been designated in Alaska.

The marine waters of Cook Inlet, covered under the Permit, are not listed as impaired (Categories 4 or 5) in the *Alaska's Final 2010 Integrated Water Quality Monitoring and Assessment Report*. Therefore, no parameters have been identified where only the Tier 1 protection level applies. Accordingly, this antidegradation analysis applies the Tier 2 protection level on a parameter-by-parameter basis consistent with 18 AAC 70.016(c)(1) and 18 AAC 70.015(a)(2), that states if the quality of water exceeds levels necessary to support propagation of fish, shellfish, wildlife, and recreation in and on the water, that quality must be maintained and protected, unless the Department authorizes a reduction in water quality. Prior to authorizing a reduction of water quality, the Department must first analyze and confirm the findings under 18 AAC 70.015(a)(2)(A-D) are met. Because Tier 1 protection applies to all waters of the U.S. in the state, the analysis must be conducted with implementation procedures in 18 AAC 70.016(b)(5)(A-C) for Tier 1 protection.

For Tier 2 protection, the analysis must also comply with 18 AAC 70.016(c)(7)(A-F). These analyses and associated finding are summarized below.

8.3 Tier 1 Analysis of Existing Use Protection

The summary below presents the Department's analyses and findings for the Tier 1 analysis of existing use protections per 18 AAC 70.016(b)(5) finding that:

> *(A) existing uses and the water quality necessary for protection of existing uses have been identified based on available evidence, including water quality and use related data, information submitted by the applicant, and water quality and use related data and information received during public comment;*

The Department reviewed water quality data, environmental monitoring studies, and information on existing uses within the coverage area. The Department finds the information reviewed as sufficient and credible to identify existing uses and water quality necessary for Tier 1 protection.

> *(B) existing uses will be maintained and protected; and*

Per 18 AAC 70.020 and 18 AAC 70.050, marine waters are protected for all uses. Therefore, the most stringent water quality criteria found in 18 AAC 70.020 and in *the Alaska Water Quality Criteria Manual for Toxic and Other Deleterious Organic and Inorganic Substances, 2008 (Toxicity Manual*) apply and were evaluated to ensure existing uses and the water quality necessary for protection of existing uses of the receiving waterbody are fully maintained and protected. Water quality criteria are developed to be protective of existing uses. The discharges authorized under the Permit are controlled or limited to either meet criteria at the point of discharge, or at the boundary of the chronic mixing zone, if applicable. Given water quality criteria is met at the boundary of the chronic mixing zone for all parameters, the existing uses of the waterbody as a whole are being maintained and protected.

> *(C) the discharge will not cause water quality to be lowered further where the department finds that the parameter already exceeds applicable criteria in 18 AAC 70.020(b), 18 AAC 70.030, or 18 AAC 70.236(b).*

As discussed in (B), the Permit has been developed to ensure discharges shall not cause or contribute to an exceedance of water quality criteria. As previously stated, the marine waters of Cook Inlet covered under the Permit are not listed as impaired. Therefore, no parameters were identified as already exceeding the applicable criteria in 18 AAC 70.020(b) or 18 AAC 70.030.

The Department concludes the terms and conditions of the Permit will be adequate to fully protect and maintain the existing uses of the water and that the findings required under 18 AAC 70.016(b)(5) are met.

8.4 Tier 2 Analysis for Lowering Water Quality

8.4.1 Scope of Tier 2 Analysis

Per 18 AAC 70.016(c)(2), an antidegradation analysis is only required for those waterbodies needing Tier 2 protection and which have any new or existing discharges that are being expanded based on permitted increases in loading, concentration, or other changes in effluent characteristics that could result in comparative lower water quality or pose new adverse environmental impacts. Per 18 AAC 70.016(c)(2)(A), the analysis will only be conducted for the portion of the discharge that represents an increase from the existing authorized discharge. Additionally, per 18 AAC 70.016(c)(3), DEC is not required to conduct an antidegradation analysis for a discharge that is not expanding.

Per 18 AAC 70.990(75), "new or expanded" with respect to discharges means discharges that are regulated for the first time or discharges that are expanded such that they could result in an increase in pollutant load or concentration or other changes in discharge characteristics that could lower water quality or have other adverse environmental impacts.

Because AK0055883 is a new permit, all discharges under the Permit must have a Tier 2 Analysis.

8.4.2 Tier 2 Analysis

The policy in 18 AAC 70.015(a)(2) states that if the quality of water exceeds levels necessary to support propagation of fish, shellfish, wildlife, and recreation in and on the water (i.e., Tier 2 waters), that quality must be maintained and protected. The Department may allow a reduction of water quality only after finding that the most practicable and effective pollution prevention, control, and treatment methods are being used such that lowering of water quality is necessary. Upon making this determination, the specific requirements of the policy noted in 18 AAC 70.015(a)(2)(A)-(D) must be met. The Department's findings are presented below.

8.4.2.1 Tier 2 Alternatives Analysis

DEC requested an alternatives analysis to support Hilcorp's application and this antidegradation analysis. Per 18 AAC 70.016(c)(4)(C-F), the applicant must submit a description and analysis of a range of practicable alternatives that have the potential to prevent or lessen the degradation associated with the expanded discharge. The analysis must identify the water quality environmental impacts and relative costs for each practicable alternative. Hilcorp submitted their analysis on January 29, 2019. DEC has reviewed and this submittal and has determined it is sufficient for Department review.

8.4.2.1.1 Gray Water (004)

Gray water produced on the Spartan 151 MODU is treated with two marine sanitation devices (MSDs), which generate chlorine through an electrolytic process. Effluent is filtered and dechlorinated after passing through the MSDs.

Production of chlorine is an inherent part of the treatment process, and dechlorination prior to discharge is standard practice. In fact, many permits, including the proposed AKG315200, require a TRCof no more than 1.0 mg/L post- dechlorination prior to discharge. The Spartan 151 MSDs meet primary treatment standards, and the gray water treatment system has received a waiver of secondary treatment as provided under 18 AAC 72.060.

The only alternative to discharging the graywater is to containerize it and ship it to shore for disposal at an appropriate facility. Assuming an average discharge of 2,812 gpd (as measured in 2018) for 90 days, a minimum of 250,000 gallons of gray water would have to be containerized and transferred. Using cost data from 2018 operations, containerizing and disposing of these wastes would add a minimum of $115,000 per month to the cost of drilling operations.

Considering the level of treatment provided, and the ability of the discharge to meet chronic and acute water quality standards at the boundary authorized mixing zones, the Department has determined that the MSDs provide the most practicable and effective method of pollution control and treatment, with a minimal reduction of water quality under 18 AAC 70.015(a)(2)(A).

8.4.2.1.2 Noncontact Cooling Water (009)

Temperature data collected during drilling operations conducted from July 10 through October 3, 2018 from the Spartan 151 revealed an average intake temperature of 11.8^{o}C and an average discharge temperature of 12.5^{o}C, yielding an average temperature rise of 0.7^{o}C. However, the maximum temperature differential was 4.2 ^{o}C, which exceeds the water quality standard for

temperature under 18AAC 70.020(b)(22)(A)(i). In addition, the maximum discharge temperature was 16.5ºC, which exceeds the water quality standard under 18 AAC 70.020(b)(22)(A)(ii) for water supply to seafood processing. Using the RPA WQBEL Tool, a maximum expected temperature of 22.36ºC was calculated using the 2018 data.

Mixing zone modeling performed for the AK0053690 used an effluent temperature of 54ºC, much higher than temperatures recorded during 2018 operations and the maximum expected temperature. Modeling for AK315200 used an effluent temperature of 23ºC, which is almost identical to the calculated maximum expected temperature.

Modeling performed for the two permits indicate that both the differential temperature and absolute discharge temperature will meet the applicable water quality criteria well within the boundary of the requested 100-meter-radius mixing zone.

A possible alternative to discharge of noncontact cooling water is to pass the water through heat exchangers in a closed loop system; which transfers heat from the noncontact cooling water to another medium. Although an engineering study has not been performed, converting to a closed loop system may be possible but such work is estimated to add as much as $1,000,000 to the cost of the project. In addition, such modifications may not be applicable to other MODUs that may discharge under this permit. Taking into account the relatively small temperature differential between the incoming seawater and the discharge, the cost of a closed loop system is not commensurate with the environmental benefits and has cross-media impacts.

Considering the relatively low temperature differential, the ability of the discharge to meet water quality standards at the boundary of the authorized 100-m mixing zone, and the minimal benefits and high cost of a closed loop system, the Department has determined that surface discharge provides the most practicable and effective method of pollution control and treatment. There will be, however, a minimal reduction of water quality under 18 AAC 70.015(a)(2)(A).

8.4.2.1.3 Uncontaminated Ballast Water (010)

Ballast water discharged during setting the legs of the MODU originates from Cook Inlet and is stored in dedicated tanks that are contaminated. Hence, the discharged uncontaminated has the same water quality as the surrounding receiving water and does not lower the water quality. An alternative analysis is not necessary in this instance.

8.4.3 Basis for Reduction of Water Quality

Based on the above finding, the Department can authorize a reduction in water quality only after the applicant has submitted evidence in accordance with the following requirements under 18 AAC 70.015(a)(2)(A – D):

8.4.3.1 Accommodation of Important Social or Economic Develop in the Vicinity

> *(A) Allowing lower water quality is necessary to accommodate important economic or social development in the area where the water is located.*

The *Revenue Source Book Fall 2018* published by the Tax Division of the State of Alaska Department of Revenue reported that Alaska's oil and gas industry is still the single largest source of state government revenue (excluding investment revenue). Key points made in that report include:

- In Fiscal Year 2017, 80% of the state's unrestricted revenue was provided directly by the oil and gas industry. Hundreds of millions of additional restricted revenue comes from royalties and other payments that to the Permanent Fund, Constitutional Budget Reserve Fund, and Public School Trust fund.

- The petroleum industry provided $871.5 million dollars in unrestricted general fund tax revenue in fiscal year 2018– and increase of more than $616.6 from fiscal year 2017.
- Cook Inlet oil production recently peaked in 2016 at 16,600 barrels per day, falling 15% in 2017.

The November 2, 2018 Final Finding of the Director for Cook Inlet Areawide Oil and Gas Lease Sale, prepared by the Alaska Department of Natural Resources, Division of Oil and Gas, included the following information pertinent to the oil and gas industry in Cook Inlet.

- More than 4,235 jobs are estimated to be created indirectly or induced by the oil and gas sector in the Kenai Peninsula alone.
- About 810 residents in the Kenai Peninsula Borough are employed directly with the oil and gas industry.
- The oil and gas industry offers relatively high-paying jobs, which pay about 2.6 times more than the statewide average wage.
- Southcentral Alaska has relied on Cook Inlet as its sole source of natural gas for more than 50 years. This natural gas is the fuel source for over 70 percent of all electricity generated in the railbelt region.

Hilcorp intends to invest approximately $35 million on the GPP production drilling work proposed for 2019. Approximately two-thirds of that will remain in the Kenai area, including employment of an additional 40 to 60 workers during drilling operations.

Hilcorp's efforts may lead to the development of increased production of affordable oil and gas for Alaskans in the Cook Inlet region. The company has expanded their operations since their appearance in 2012, adding five platforms and one on-shore facility to their original holdings in Cook Inlet. Hilcorp maintains almost 540 full-time employees in Alaska, approximately 370 of whom work in the Cook Inlet area.

Oil and gas produced in Cook Inlet helps to keep operations viable and products flowing. The company acknowledges their role in helping to reinvigorate the local service industry in the Cook Inlet area, and strives to provide a reliable source of oil and natural gas to meet local demand and allow for social and economic growth.

The Department finds the requirements of this part of the antidegradation analysis have been met.

8.4.3.2 Reducing Water Quality Will Not Violate Applicable Criteria

(B) *Except as allowed under this subsection, reducing water quality will not violate the applicable criteria of 18 AAC 70.020 or 18 AAC 70.235 or the whole effluent toxicity limit in 18 AAC 70.030.*

18 AAC 70.15(a)(2) specifically allows the reduction of water quality under certain limited circumstances, including a mixing zone, a zone of deposit, and a short-term variance.

DEC authorizes a 35-meter radius, cylindrical chronic mixing zone and 18-meter radius, cylindrically shaped acute mixing zone for Discharge 004 – Graywater for TRC. The discharge of the treated graywater from the MODU will be chlorinated specifically to prevent exceedances of bacteria criteria and will be subject to a TBEL MDL of 1.0 mg/L at the point of discharge. In addition, a standard 100-meter radius, cylindrically shaped chronic mixing zone is authorized for Noncontact Cooling Water (009) for chronic toxicity and temperature. All mixing zones authorized by DEC under the Permit have been appropriately sized such that applicable water quality criteria

will be met at the respective mixing zone boundaries to ensure that the quality of the waterbody as a whole is protected and maintained (See Section 4.3.3).

Site-specific criteria, as allowed by 18 AAC 70.235, have not been established in the vicinity of the discharge in Cook Inlet and is therefore not applicable. As this is the first issuance of the Permit, information is not currently available to establish chronic toxicity limits per 18 AAC 70.030 and 18 AAC 83.435(f). However, where chronic toxicity must be controlled to ensure water quality criteria is met at the boundary of authorized mixing zones, a combination of source control BMPs and pollution reduction action levels, coupled with chronic WET monitoring requirements, are required by the Permit. Accordingly, if the terms of the Permit are followed, violations of marine water quality criteria in 18 AAC 70.020 will not occur.

The Department finds that the requirements of this part of the antidegradation analysis have been met.

8.4.3.3 Tier 1 Protection of Existing Uses

(C) *The resulting water quality will be adequate to fully protect existing uses of the water.*

As discussed in part (B) of the preceding Tier 1 analysis, marine waters are protected for all uses and all water quality criteria developed to protect these uses are met at the boundary of the chronic mixing zone for produced water. Hence, this finding has been met.

8.4.3.4 All Wastes and Other Substances Discharged Will be Treated and Controlled

(D) All wastes and other substances discharged will be treated and controlled to achieve (i) for new and existing point sources, the highest statutory and regulatory requirements...

The applicable "highest statutory and regulatory treatment requirements" are defined in 18 AAC 70.015(d). The definition includes the four components noted below:

Any federal TBEL identified in 40 CFR 125.3 and 40 CFR 122.29, revised as of July 1, 2017 and adopted by reference;

The first part of the definition predominantly includes all applicable federal ELGs, as found in 40 CFR Part 435 Subpart D – Coastal Subcategory, adopted by reference at 18 AAC 83.010(g)(3). The Permit implements the more stringent ELGs among the BPT, the BAT, and the BCT for the oil and gas extraction coastal subcategory. Per Sections 4.3.2 and 6.1.2, TBELs based on ELGs have been established Graywater (004) per the Coastal Subcategory of 40 CFR 435.43.

In the absence of specific ELGs for waste streams, limitations and related requirements may be established using case-by-case BPJ. Per Sections 5.3.1 and 6.1.4, the Department has developed case-by-case TBELs using BPJ for limiting TRC in Graywater (004) and considered no discharge of free oil in Uncontaminated Ballast Water (010). However, the TBEL of no free oil was replaced with a more stringent WQBEL for oil and grease (sheen).

(1) Any minimum treatment standards in 18 AAC 72.050;

Per 18 AAC 72.050(a)(4) domestic wastewater discharges into the waters of the US must have received secondary treatment prior to discharge. The Permit only authorizes discharges of graywater after DEC issues a waiver to the minimum treatment standards. The Spartan 151 has successfully obtained a waiver for secondary treatment from DEC, which meets the intent of 18 AAC 72.050.

(2) any treatment requirements imposed under another state law that is more stringent than a requirement of this chapter; and

This part of the definition includes any treatment required by state law that is more stringent than 18 AAC 70. Other regulations beyond 18 AAC 70 that may apply to this permitting action include 18 AAC 15 and 18 AAC 83. The Permit is consistent with 18 AAC 83 and neither the regulations in 18 AAC 15, nor any other state legal requirement that the Department is aware of, impose more stringent treatment requirements than 18 AAC 70. Therefore, this part of the definition is met.

> *(3) any water quality-based effluent limitations established in accordance with 33 USC 1311(b)(1)(C)(Clean Water Act, sec. 301(b)(1)(C).*

Alaska water quality criteria are presented in 18 AAC 70.020 and the *Water Quality Criteria for Toxics and Other Deleterious Substances*, amended through December 12, 2008 (*Toxics Manual*). WQBEL limits have been established to be more stringent than applicable TBELs per the a *Reasonable Potential Analysis and Effluent Limits Development Guide*, June 30, 2014 (*RPA/WQBEL Guidance*), which complies with 18 AAC 83.435 and CWA 301(b)(1)(C).

Water quality criteria per 18 AAC 70.020(17) requires that there be no concentrations of petroleum hydrocarbons, animal fats, or vegetable oils and that surface waters be free from floating oil, film, sheen or discoloration. Accordingly, The Permit includes a narrative WQBEL for oil and grease (visible sheen) in graywater and uncontaminated ballast water discharges and specific BMPs to help ensure oil and grease is controlled appropriately at the source. Therefore, this part of the definition has been met.

8.4.4 Antidegradation Analysis Conclusion

Based on each of the four individual findings being met, DEC authorizes lowering of the water quality in the vicinity of the GPP site by the discharges under the Permit.

9 OTHER PERMIT CONDITIONS

9.1 Standard Permit Provisions

Permit Appendix A of the Permit contains standard regulatory language that must be included in all APDES permits. These requirements are based on the regulations and cannot be challenged in the context of an individual APDES permit action. The standard regulatory language covers requirements such as monitoring, recording, reporting requirements, compliance responsibilities, signatory authority, and other general requirements.

9.2 Quality Assurance Project Plan

The permittee is required to develop and implement a facility-specific QAPP that ensures all monitoring data associated with the Permit are accurate and to explain data anomalies if they occur. The permittee is required to develop and implement procedures in a QAPP that documents standard operating procedures the permittee must follow for collecting (e.g., noncontact cooling water sample collection for chronic WET analysis), handling, storing and shipping samples; laboratory analysis (e.g., most sensitive methods); and data reporting. If a QAPP has already been developed and implemented, the permittee must review and revise the existing QAPP to ensure it includes the necessary content. The permittee must submit a letter to the Department prior to discharging or within 90 days of the effective date of the Permit certifying that the QAPP has been revised and implemented. The QAPP shall be retained onsite and made available to the Department upon request.

9.3 Best Management Practices Plan

A Best Management Practices Plan (BMP plan) presents operating and housekeeping measures intended to minimize or prevent the generation and potential release of pollutants from a facility to the waters of the U.S. during normal operations and additional activities. Per 18 AAC 83.475(4), "A permit must include best management practices to control or abate the discharge of pollutants and hazardous in a permit when the practices are reasonably necessary to achieve effluent limitations and standards…"

Within 90 days of the effective date of the Permit, the permittee must review, revise as necessary, implement the BMP Plan to address current activities at the terminal and submit written certification of the review, revision and implementation to DEC.

In each subsequent year of the Permit, the permittee must establish a committee to review and revise the BMP Plan as necessary to address any modifications or changes to operational practices at the terminal and to continue to meet the objectives and specific requirements of the Permit. The permittee must submit written certification to DEC that the BMP Plan review committee has reviewed the BMP Plan, and modified if necessary, by January 31st of each year the Permit remains in effect.

9.3.1 Specific BMP Requirements

In addition to the standard BMP components, DEC requires the following specific BMPs be included in the BMP Plan for the applicable discharges.

9.3.1.1 BMPs for Graywater

Per Section 6.1.2, permittees shall develop and implement housekeeping BMPs which ensure discharges do not contain oil (e.g., cook oils), floating solids, foam or garbage and have minimal chemical cleaning compounds and disinfection products (e.g., chlorine) through adherence with manufacturer's instructions. In addition, for discharges of graywater treated using an MSD, or other system adding chlorine, the permittee must develop and implement operation and maintenance BMPs that ensure consistent and effective dechlorination to achieve appropriate chlorine levels (e.g., less than 1.0 mg/L)..

9.3.1.2 BMPs for Uncontaminated Ballast Water

Specific BMPs must be developed and implement to support the prohibition of free oil for Uncontaminated Ballast Water (010). The permittee must ensure that ballast water contaminated with oil and grease is processed through an oil-water separator, or similar process, prior to discharge.

9.3.1.3 BMPs for Noncontact Cooling Water

Per Section 6.2.3, DEC requires that the BMP Plan include a specific BMP to optimize the use of chemicals (e.g., a chemical-dosing matrix) and to minimize the potential for chronic toxicity in discharges of noncontact cooling water (Discharge 009) that are required to monitor for chronic WET. Upon exceeding chronic WET PR BMP Revision Action Levels, the permittee must modify this specific BMP to include BMP revisions to reduce subsequent chronic toxicity to below the PR BMP Revision Action Levels. Examples of BMP revisions include, but are not limited to, revamping the chemical dosing matrix or injection practices; substitution of less toxic chemicals; eliminating, reducing, or controlling spikes resulting from batch dosing; or alternative disposal options. BMPs must continue to be revised until the chronic WET PR BMP Revision Action Levels are attained.

9.3.1.4 Cooling Water Intake Structure Requirements

The Permit incorporates 40 CFR Part 125, Subpart N the updated in 2014 and adopted by reference at 18 AAC 83.010(c)(9) for cooling water intake structures (CWIS) that requires new offshore oil and gas facilities to take measures to reduce entrainment and impingement of aquatic life associated with the construction and operation of CWIS. The CWIS regulation was promulgated to ensure that the location, design, construction, operation and capacity of CWIS reflect the best technology available to minimize adverse impacts to aquatic organisms.

The CWIS regulations apply to all facilities, new or existing, that are a point source discharge, intake 2 million gallons per day of water, and use at least 25 percent of that water for cooling. Per CWIS regulations, the owner or operator of a new offshore oil and gas extraction facility must comply with: (i) Track I in 40 CFR Part 125.134(b) or Track II in 40 CFR Part 125.134(c) if it is a fixed facility; or (ii) Track I in 40 CFR Part 125.134(b) if it is not a fixed facility (i.e., MODU).

The Permit requires the permittee to select and implement technologies or operational measures to minimize impingement mortality and entrainment of fish and shellfish and include this information in the BMP Plan. The BMP Plan requirement gives the permittee discretion on what methods to select and how to implement those methods. However, the Department retains the authority to impose more stringent conditions on a case-by-case basis, if such conditions are deemed necessary by the Department to comply with any provision of law in accordance with the Permit. Specifically, DEC can require the implementation of additional technologies and operational measures if there is information indicating the potential for specified aquatic organisms to pass through the hydraulic zone of influence of the MODU cooling water intake structure.

9.4 Termination Notification

DEC may terminate coverage under an APDES permit for the reasons described in 18 AAC 83.140 using the procedures provided in 18 AAC 83.130. If a permittee desires to terminate coverage, the Permit requires the permittee to provide notice of termination (NOT) to DEC within 30 days following cessation of discharges. The notice must include certification that the facility is not subject to an enforcement action or citizen suit. The notice must also include any final reports required by the Permit.

10 OTHER LEGAL REQUIREMENTS

Endangered Species Act

The ESA requires federal agencies to consult with NMFS and the U.S. Fish and Wildlife Service (FWS) if their actions could beneficially or adversely affect any threatened or endangered species. As a state agency, DEC is not required to consult with these federal agencies regarding permitting actions. However, the Department has verbally discussed the Permit with the Services and is in the process of verifying listings of threatened and endangered species in the subject coverage area. The applicant has also been in contact with NMFS concerning related items and developing a Biological Evaluation. There are four listed species and three species have critical habitat in Cook Inlet.

The following threatened and endangered species occur in the Trading Bay region of Cook Inlet and are potentially affected by discharges covered under the Permit:

- Beluga whale (*Delphinapterus leucas*): Endangered
- Northern sea otter (*Enhydra lutris kenyoni*): Threatened
- Steller's eider (*Polysticta stelleri*): Threatened

10.1.1 Beluga Whale

Beluga whales are divided into five stocks: Cook Inlet, Bristol Bay, eastern Bearing Sea, eastern Chukchi Sea, and Beaufort Sea (NMFS 2003). The Cook Inlet stock is classified as the most vulnerable with a depleted status designation on May 31, 2000 (65 FR 34590) and the designation of the population as endangered under the ESA (73 FR 62919) on October 22, 2008. This was followed by a designation of two areas of critical habitat in Cook Inlet on April 11, 2011 (76 FR 20180, 50 CFR 226.220). More recently, updates and corrections to the listing entries occurred on July 23, 2014 (79 FR 42688). The Cook Inlet population is the most isolated stock, spending the entire year in Cook Inlet and the majority of the time in the northern portion of Cook Inlet. The critical habitat areas are prioritized according to levels of sensitivity. The Permit coverage area excludes the highly sensitive habitat of the beluga whale. This critical beluga habitat is also excluded from oil and gas lease sales through DNR mitigation measures (DNR Cook Inlet BIF, 2009). The most recent recovery plan focuses on addressing population threats, which include cumulative effects of multiple stressors and pollution related to oil and gas activities (NOAA 2016).

10.1.2 Northern Sea Otter

The FWS issued a final rule listing the southwest Alaska distinct population segment of the northern sea otter as threatened under the ESA on August 9, 2005 (70 FR 46366). Critical habitat was designated on October 8, 2009. These areas contain all the elements necessary for the conservation of the southwest Alaska northern sea otter population, and thus are subject to special management considerations and protections to minimize the risk of oil and other hazardous-material spills from commercial shipping - although not in the Trading Bay region of Cook Inlet. (74 FR 51988). Designated habitat areas occur in Cook Inlet, but the Southcentral population is not considered strategic due to known population levels and low rates of human caused mortality and serious injury (79 FR 22156).

10.1.3 Steller’s Eider

The Alaskan breeding populations of Steller's eider were listed as threatened under the ESA on June 11, 1997 (62 FR 31748). Designated critical habitat for the Steller's eider includes five units located along the Bering Sea and north side of the Alaskan Peninsula. The range of the Alaska population of Steller’s eider extends from Kodiak into lower Cook Inlet. There is no critical habitat in Cook Inlet (66 FR 8849 or 50 FR 17). Petitions for delisting were responded to on September 14, 2016 as not having substantial findings and a status review is not being initiated (81 FR 63160).

10.2 Essential Fish Habitat

Essential fish habitat (EFH) includes the waters and substrate (sediments, etc.) necessary for fish from commercially-fished species to spawn, breed, feed, or grow to maturity. The 1996 amendments to the Magnuson-Stevens Fishery Management and Conservation Act set forth a number of new mandates for NMFS, regional fishery management councils, and other federal agencies to identify and protect important marine and anadromous fish habitat.

No EFH is known to exist in the Permit coverage area. As part of the EMP, observations of any aquatic species will be included in reports and notifications to DEC.

10.3 Permit Expiration

The Permit will expire five years from the effective date.

11 REFERENCES

ADR Department of Revenue. Fall 2018 Revenue Sources Book. December 14, 2018

DEC 2015. Mobile Oil and Gas Exploration in Cook Inlet in State Waters ODCE – AKG315100

DEC 2019. Public Review Draft, Cook Inlet General Permit – AKG315200

DNR Department of Natural Resources, Division of Oil and Gas. Final finding of the Director, Cook Inlet Areawide Oil and Gas Lease Sales. November 2, 2018.

EPA 1991b. Technical Support Document for Water Quality-based Toxics Control. Office of Water, EPA/505/2-90-001, PB91-127415. Washington D.C., March 1991.

EPA 1992a. Methods for the Determination of Diesel, Mineral, and Crude Oils in Offshore Oil and Gas Industry Discharges. EPA 821-R-92-008. Office of Water, Engineering and Analysis Division, Washington, DC 20460.

EPA 1992b. Methods for Aquatic Toxicity Identification Evaluations: Phase II Toxicity Identification Procedures for Samples Exhibiting Acute and Chronic Toxicity. EPA/600/R-92/080. Environmental Research Laboratory, Duluth, MN.

EPA 1992c. Methods for Aquatic Toxicity Identification Evaluations: Phase III Toxicity Confirmation Procedures. EPA/600/R-92/081. Environmental Research Laboratory, Duluth, MN.

EPA 1992d. U.S. EPA, Region 10. Region 10 Guidance: Best Management Practices Plans in NPDES Permits. Prepared by Water Division, Wastewater Management and Enforcement Branch, Seattle, WA. June 1992.

EPA 1993a. Development Document for Effluent Limitations Guidelines and Standards for the Offshore Subcategory of the Oil and Gas Extraction Point Source Category (Final). Office of Water, EPA #921-R-93-003. U.S. EPA, Washington DC. January 1993.

EPA 1993b. 40 CFR PART 435. Oil and Gas Extraction Point Source Category Offshore Subcategory Effluent Guidelines and New Source Performance Standards Final Rule. 48 Federal Register 1254, March 4, 1993.

EPA 1996. EPA Guidance on Application of Mixing Zone Policies in EPA-Issued NPDES Permits. Robert Perciasepe, Assistant Administrator, Office of Water. August 6, 1996.

EPA 1996. EPA Effluent Limitation Guidelines for Oil and Gas Facilities. 40 CFR 435

EPA 2003 Survey of Chemical Contaminants in Fish, Invertebrates and Plants Collected in the Vicinity of Tyonek, Seldovia, Port Graham, and Nanwalek - Cook Inlet, AK. USEPA, Region 10. EPA910-R-01-003. December, 2003.

EPA 2010. Permit Writers' Guide to Water Quality-based Permitting for Toxic Substances. EPA 883-K-10-001005. Office of Water. Washington, D.C., July 1987.

Cook Inlet Keeper vs. USEPA, 2012.

CIRCAC 1997. Final Report – 1996, Cook Inlet Shelikof Strait Project, Prepared by Kinnetic Laboratories Incorporated for Cook Inlet Resource Conservation Advisory Board, December 1997

CIRCAC 1998. Final Report – 1997 Cook Inlet Sediment Toxicity and Hydrocarbon Study, Prepared by Kinnetic Laboratories Incorporated for Cook Inlet Resource Conservation Advisory Board, June 1998

FWS 2014. Marine Mammal Protection Act; Stock Assessment Reports. Federal Register Vol 79, April 4, 2014, pages 22154-9.

Kinnetic Laboratories Incorporated (KLI) 2010. Produced Water Report Produced Water Discharge Fate and Transport in Cook Inlet, 2008-2009: NPDES Permit No. AKG-31-5000. US Environmental Protection Agency

KLI. 2007. Current and Suspended Sediment Investigation, Knik Arm – Cook Inlet, Alaska. Data Report. Prepared by Kinnetic Laboratories, Inc. Prepared for Knik Arm Bridge and Toll Authority, HDR Alaska, Inc., and URS Corporation.

NOAA 2014. Circulation Survey of Cook Inlet from June 14, 2012 to August 17, 2012. US Department of Commerce, National Oceanic and Atmospheric Administration, National Ocean Service, Center for Operational Oceanographic Products and Service.

NOAA 2016. Recovery Plan for the Cook Inlet Beluga Whale (*Delphinapterus leucas*). National Marine Fisheries, National Oceanic and Atmospheric Administration, NOAA Fisheries, December 2016.

MMS 1995. U.S. Minerals Management Service, Alaska OCS Region. Alaska Outer Continental Shelf, Cook Inlet Planning Area Oil and Gas Lease Sale 140. Draft EIS, Vol. 1. U.S. Dept. Of Interior, Minerals Management Service. OCS EIS/EA MMS-94-0066. January 1995.

MMS 1995. U.S. Minerals Management Service, Alaska OCS Region. Current Water Quality in Cook Inlet, Alaska, Study. U.S. Dept. Of Interior, Minerals Management Service. OCS Study MMS-95-0009. March 1995.

MMS (Minerals Management Service). 2000. Sediment Quality in Depositional Areas of Shelikof Strait and Outermost Cook Inlet (OCS Study MMS 2000-024), Minerals Management Service Prepared by Arthur D. Little, Inc., Cambridge, MA for U.S. Department of the Interior, Minerals Management Service, Alaska Outer Continental Shelf, Anchorage, AK.

MMS 2003. U.S. Minerals Management Service, Alaska OCS Region. Cook Inlet Planning Area, Oil and Gas Lease Sales 191 and 199, Final Environmental Impact Statement. OCS EIA/EA. MMS 2003-055. November, 2003.

NOAA 2017. NOAA Habitat Conservation – National Marine Fisheries Service: Habitat Protection. Essential Fish Habitat Mapper, accessed February 21, 2017: http://www.habitat.noaa.gov/protection/efh/efhmapper/index.html

Okkonen and Howell 2003. Measurements of Temperature, Salinity, and Circulation in Cook Inlet, Alaska. Okkonen, Stephen R. and Howell, Stephen S., Institute of Marine Science, University of Alaska, Fairbanks and Cook Inlet Regional Citizens Advisory Council. October, 2003.

Okkonen, S., S. Pegau and S. M. Saupe. 2009. Seasonality of Boundary Conditions for Cook Inlet, Alaska Final Report. OCS Study MMS 2009-041, University of Alaska Coastal Marine Institute, University of Alaska, Fairbanks and USDOI, MMS, Alaska OCS Region.

OLF 2007. 2007 Environmental Report, The Environmental Efforts of the Petroleum Industry: Facts and Trends, Oljeinindustriens Landsforening (Norwegian Oil Association), Stavanger, Norway 2007

OSPAR 2013. OSPAR List of Substances Used and Discharged Offshore which Are Considered to pose Little or No Risk to the Environment (PLONOR), OSPAR Commission, Agreement 2013-06.

Parametrix 2017. Supplemental Mixing Zone Study for Cook Inlet Oil and Gas Production Facilities. March 31, 2017

Schlumberger 2015, Schlumberger Oilfield Glossary, accessed October 9, 2015: http://www.glossary.oilfield.slb.com/

Engineer Research and Development Center, Vicksburg, MS.EPA - Tetra Tech 1994. Ocean Discharge Criteria Evaluation for Cook Inlet (Oil and Gas Lease Sale 149) and Shelikof Strait (Final Draft Report). Prepared for the U.S. EPA, Region 10, by Tetra Tech, Redmond, WA. September 9, 1994 (as amended by EPA, Region 10, January 1995).

USGS 1999. U.S. Geological Survey. Water Quality Assessment of the Cook Inlet Basin, Alaska Summary of Data through 1997. Water Resources Investigations Report 99-4116. Anchorage, Alaska. 1999.

USGS 2011, Assessment of Undiscovered Oil and Gas Resources of the Cook Inlet Region, South Central Alaska, 2011. National Assessment of Oil and gas Fact Sheet

ATTACHMENT 1. MIXING ZONE ANALYSIS CHECKLIST

Mixing Zone Authorization Checklist based on Alaska Water Quality Standards (2003)

Mixing Zone Authorization Checklist based on Alaska Water Quality Standards (2003)
The purpose of the Mixing Zone Checklist is to guide the permit writer through the mixing zone regulatory requirements to determine if all the mixing zone criteria at 18 AAC 70.240 through 18 AAC 70.270 are satisfied, as well as provide justification to authorize a mixing zone in an APDES permit. In order to authorize a mixing zone, all criteria must be met. The permit writer must document all conclusions in the permit Fact Sheet, however, if the permit writer determines that one criterion cannot be met, then a mixing zone is prohibited, and the permit writer need not include in the Fact Sheet the conclusions for when other criteria were met.

Criteria	Description	Answer & Resources	Regulation
Size	Is the mixing zone as small as practicable? Permit writer conducts analysis and documents analysis in Fact Sheet at: Section 4.3 Mixing Zone Analysis	Yes, mixing zone as small as practicable. Technical Support Document for Water Quality-Based Toxics Control •Fact Sheet, Section 4.3 • Fact Sheet, Section 4.3.1 • DEC's RPA Guidance • EPA Permit Writers' Manual	18 AAC 70.240 (a)(2) 18 AAC 70.245 (b)(1) - (b)(7) 18 AAC 70.255(e) (3) 18 AAC 70.255 (d)
Technology	Were the most effective technological and economical methods used to disperse, treat, remove, and reduce pollutants?	Answer: Yes Fact Sheet, Section 4.3.2	18 AAC 70.240 (a)(3)

Criteria	Description	Answer & Resources	Regulation
	If yes, describe methods used in Fact Sheet at Section 4.3 Mixing Zone Analysis.		
Low Flow Design	**For river, streams, and other flowing fresh waters.** - Determine low flow calculations or documentation for the applicable parameters. Justify in Fact Sheet	N/A	18 AAC 70.255(f)
Existing use	Does the mixing zone…		
	(1) Partially or completely eliminate an existing use of the waterbody outside the mixing zone? **If yes, mixing zone prohibited.**	Answer: No Fact Sheet Section 4.3.3	18 AAC 70.245(a)(1)
	(2) Impair overall biological integrity of the waterbody? **If yes, mixing zone prohibited.**	Answer: No Fact Sheet Section 4.3.4	18 AAC 70.245(a)(2)
	(3) Provide for adequate flushing of the waterbody to ensure full protection of uses of the waterbody outside the proposed mixing zone? **If no, then mixing zone prohibited.**	Answer: Yes Fact Sheet Section 4.3.3	18 AAC 70.250(a)(3)
	(4) Cause an environmental effect or damage to the ecosystem that the Department considers to be so adverse that a mixing zone is not appropriate? **If yes, then mixing zone prohibited.**	Answer: No Fact Sheet Section 4.3.7	18 AAC 70.250(a)(4)
	Does the mixing zone…		

Criteria	Description	Answer & Resources	Regulation
Human consumption	(1) Produce objectionable color, taste, or odor in aquatic resources harvested for human consumption? **If yes, mixing zone may be reduced in size or prohibited.**	Answer: No, no resident aquatic resources known Fact Sheet Section 4.3.4 and non-toxic requirements for discharges	18 AAC 70.250(b)(2)
	(2) Preclude or limit established processing activities of commercial, sport, personal use, or subsistence shellfish harvesting? **If yes, mixing zone may be reduced in size or prohibited.**	Answer: No, no resident aquatic resources known Fact Sheet Section 4.3.4 and non-toxic requirements for discharges	18 AAC 70.250(b)(3)
Spawning Areas	Does the mixing zone…		
	(1) discharge in a spawning area for anadromous fish or Arctic grayling, northern pike, rainbow trout, lake trout, brook trout, cutthroat trout, whitefish, sheefish, Arctic char (Dolly Varden), burbot, and landlocked Coho, king, and sockeye salmon? **If yes, mixing zone prohibited.**	Answer: No, no resident aquatic resources known Fact Sheet Section 4.3.5 and non-toxic requirements for discharges	18 AAC 70.255 (h)
Human Health	Does the mixing zone…		
	(1) Contain bioaccumulating, bioconcentrating, or persistent chemical above natural or significantly adverse levels?	Answer: No	18 AAC 70.250 (a)(1)

Criteria	Description	Answer & Resources	Regulation
	If yes, mixing zone prohibited.	Fact Sheet Section 4.3.6	
	(2) Contain chemicals expected to cause carcinogenic, mutagenic, tetragenic, or otherwise harmful effects to human health? **If yes, mixing zone prohibited.**	Answer: No Fact Sheet Section 4.3.6	
	(3) Create a public health hazard through encroachment on water supply or through contact recreation? **If yes, mixing zone prohibited.**	Answer: No Fact Sheet Section 4.3.6	18 AAC 70.250(a)(1)(C)
	(4) Meet human health and aquatic life quality criteria at the boundary of the mixing zone? **If no, mixing zone prohibited.**	Answer: Yes Fact Sheet Section 4.3.6	18 AAC 70.255 (b),(c)
	(5) Occur in a location where the Department determines that a public health hazard reasonably could be expected? **If yes, mixing zone prohibited.**	Answer: No Fact Sheet Section 4.3.6	18 AAC 70.255(e)(3)(B)
Aquatic Life	Does the mixing zone…		
	(1) Create a significant adverse effect to anadromous, resident, or shellfish spawning or rearing? **If yes, mixing zone prohibited.**	Answer: No Fact Sheet Section 4.3.7	18 AAC 70.250(a)(2)(A-C)
	(2) Form a barrier to migratory species? **If yes, mixing zone prohibited.**	Answer: No Fact Sheet Section 4.3.7	
	(3) Fail to provide a zone of passage? **If yes, mixing zone prohibited.**	Answer: No	

Criteria	Description	Answer & Resources	Regulation
		Fact Sheet Section 4.3.7	
	(4) result in undesirable or nuisance aquatic life? **If yes, mixing zone prohibited.**	Answer: No Fact Sheet Section 4.3.7	18 AAC 70.250(b)(1)
	(5) Result in permanent or irreparable displacement of indigenous organisms? **If yes, mixing zone prohibited.**	Answer: No Fact Sheet Section 4.3.7	18 AAC 70.255(g)(1)
	(6) Result in a reduction in fish or shellfish population levels? **If yes, mixing zone prohibited.**	Answer: No Fact Sheet Section 4.3.7	18 AAC 70.255(g)(2)
	(7) Prevent lethality to passing organisms by reducing the size of the acute zone? **If yes, mixing zone prohibited.**	Answer: No Fact Sheet Section 4.3.7	18 AAC 70.255(b)(1)
	(8) cause a toxic effect in the water column, sediments, or biota outside the boundaries of the mixing zone? **If yes, mixing zone prohibited.**	Answer: No Fact Sheet Section 4.3.7	18 AAC 70.255(b)(2)
Endangered Species	Are there threatened or endangered species (T/E spp) at the location of the mixing zone? If yes, are there likely to be adverse effects to T/E spp based on comments received from USFWS or NOAA. If yes, will conservation measures be included in the Permit to avoid adverse effects? **If yes, explain conservation measures in Fact Sheet. If no, mixing zone prohibited.**	Answer: Yes Fact Sheet Section 4.3.8	Program Description, 6.4.1 #5 18 AAC 70.250(a)(2)(D)