ALASKA POLLUTANT DISCHARGE ELIMINATION SYSTEM

PERMIT FACT SHEET – PRELIMINARY DRAFT

Individual Permit: AK0053767 – Eni US Operating Co. Inc., Spy Island Drillsite

DEPARTMENT OF ENVIRONMENTAL CONSERVATION
Wastewater Discharge Authorization Program
555 Cordova Street
Anchorage, AK 99501

Public Comment Period Start Date: **TBD**
Public Comment Period Expiration Date: **TBD**
Alaska Online Public Notice System

Technical Contact: Anita Erickson, P.E.
Alaska Department of Environmental Conservation
Division of Water
Wastewater Discharge Authorization Program
555 Cordova St., 3rd Floor
Anchorage, AK 99501-2617
(907) 269-7616
Fax: (907) 269-3487
Anita.Erickson@alaska.gov

Proposed issuance of an Alaska Pollutant Discharge Elimination System (APDES) permit to:

ENI US OPERATING CO., INC.

For wastewater discharges from:

Spy Island Drillsite
Latitude: 70° 33’ 16” N; Longitude: 149° 53’ 22” W
Simpson Lagoon, Beaufort Sea

The Alaska Department of Environmental Conservation (Department or DEC) proposes to reissue APDES individual Permit AK0053767 – Eni US Operating Co. Inc., Spy Island Drillsite (Permit). The Permit authorizes and sets conditions on the discharge of pollutants from this facility to waters of the United States. In order to ensure protection of water quality and human health, the Permit places limits on the types and amounts of pollutants that can be discharged from the facility and outlines best management practices to which the facility must adhere.

This fact sheet explains the nature of potential discharges from the facility and the development of the Permit including:

- information on public comment, public hearing, and appeal procedures,
- a listing of proposed effluent limitations and other conditions,
- technical material supporting the conditions in the permit, and
- proposed monitoring requirements in the permit

Public Comment

Persons wishing to comment on the Draft Permit may do so in writing by the expiration date of the public comment period. In addition, commenters may provide oral comments by attending a public hearing, if scheduled, as well as providing written comments. Written comments should be submitted to the Department at the technical contact address, fax, or email identified above (see also the public comments section of the attached public notice). Mailed comments and requests must be postmarked on or before the expiration date of the public comment period. Commenters are requested to submit a concise statement on the permit condition(s) and the relevant facts upon which the comments are based. Commenters are encouraged to cite specific permit requirements or conditions in their submittals.

The Department will hold a public hearing whenever the Department finds, on the basis of requests, a significant degree of public interest in a Draft Permit. The Department may also hold a public hearing if a hearing might clarify one or more issues involved in a permit decision. A public hearing will be held at the closest practicable location to the site of the operation. If the Department holds a public hearing, the Director will appoint a designee to preside at the hearing. A hearing will be tape recorded. The public should also submit written testimony in lieu of, or in addition to, providing oral testimony at the hearing.

After the close of the public comment period and after a public hearing, if applicable, the Department will review the comments received on the Draft Permit. The Department will respond to the comments received in a Response to Comments document that will be made available to the public. If no substantive comments are received, the tentative conditions in the Draft Permit will become the proposed Final Permit.

The proposed Final Permit will be made publicly available for a five-day applicant review. The applicant may waive this review period. After the close of the proposed Final Permit review period, the Department will make a final decision regarding permit issuance. A Final Permit will become effective 30 days after the Department's decision, in accordance with the state's appeals process at 18 AAC 15.185.

The Department will transmit the Final Permit, Fact Sheet (amended as appropriate), and the Response to Comments to anyone who provided comments during the public comment period or who requested to be notified of the Department's final decision.

Appeals Process

The Department has both an informal review process and a formal administrative appeal process for final APDES permit decisions. An informal review request must be delivered within 15 days after receiving the Department's decision to the Director of the Division of Water at the following address:

Director, Division of Water

Alaska Department of Environmental Conservation
555 Cordova Street, 3rd Floor
Anchorage AK, 99501

Interested persons can review 18 AAC 15.185 for the procedures and substantive requirements regarding a request for an informal DEC review. See http://dec.alaska.gov/commish/review-guidance/informal-reviews for information regarding informal reviews of DEC decisions.

An adjudicatory hearing request must be delivered to the Commissioner of the Department within 30 days of the permit decision or a decision issued under the informal review process. An adjudicatory hearing will be conducted by an administrative law judge in the Office of Administrative Hearings within the Department of Administration. A written request for an adjudicatory hearing shall be delivered to the Commissioner at the following address:

Commissioner

Alaska Department of Environmental Conservation
410 Willoughby Street, Suite 303
Juneau AK, 99811-1800

Interested persons can review 18 AAC 15.200 for the procedures and substantive requirements regarding a request for an adjudicatory hearing. See http://dec.alaska.gov/commish/review-guidance/adjudicatory-hearing-guidance for information regarding appeals of DEC decisions.

Documents are Available

The permit, fact sheet, application, and related documents can be obtained by visiting or contacting DEC between 8:00 a.m. and 4:30 p.m. Monday through Friday at the addresses below. The permit, fact sheet, application, and other information are located on the Department's Wastewater Discharge Authorization Program website: http://dec.alaska.gov/water/wastewater/.

Alaska Department of Environmental Conservation
Division of Water
Wastewater Discharge Authorization Program
555 Cordova Street
Anchorage, AK 99501
(907) 269-6285

Alaska Department of Environmental Conservation
Division of Water
Wastewater Discharge Authorization Program
610 University Avenue
Fairbanks, AK 99709-3643
(907) 451-2183

TABLE OF CONTENTS

TABLES

FIGURES

APPENDICES

1.0 Introduction

On December 14, 2017, the Alaska Department of Environmental Conservation (DEC or Department) received an application from Eni US Operating Co., Inc. (Eni or permittee) for reissuance of Alaska Pollutant Discharge Elimination System (APDES) Individual Permit AK0053767 – Eni US Operating Co. Inc., Spy Island Drillsite (Permit). The application includes a request for the Department to reauthorize discharges, with mixing zones, from the Spy Island Drillsite (SID or facility) into Simpson Lagoon of the Beaufort Sea (Figure A-1). This Fact Sheet was developed based on the application and supplemental information requested by DEC.

1.1 Applicant

This fact sheet provides information on the reissuance of the Permit for the following entity:

Permittee:	Eni US Operating Co. Inc.
Name of Facility:	Spy Island Drillsite
APDES Permit Number:	AK0053767
Facility Location:	Simpson Lagoon, Beaufort Sea, Alaska
Mailing Address:	3800 Centerpoint Drive, Suite 300, Anchorage, Alaska 99503
Facility Contact:	Ms. Jane Thomas or Mr. Rich Vicente

The Permit authorizes the following discharges to Simpson Lagoon, Beaufort Sea, Alaska:

Outfall	Description	Latitude	Longitude
001	Domestic Wastewater	70° 33’ 16” N	149° 53’ 22” W
002	Reverse Osmosis Reject Wastewater	70° 33’ 16” N	149° 53’ 22” W

The locations of the above-listed discharge outfalls are depicted in Appendix A – Figure A-1 Location of Spy Island Drillsite, Figure A-2 Site Plan of Spy Island Drillsite.

1.2 Authority

The APDES Program regulates the discharge of wastewater to waters of the United States (U.S.). Transfer of authority to administer the National Pollutant Discharge Elimination System (NPDES) Program to Alaska from the Environmental Protection Agency (EPA) occurred in four phases with oil and gas facilities transferring as part Phase IV on October 31, 2012. The state NPDES program is known as the APDES Program and is administered by DEC. Accordingly, DEC is now the permitting authority for regulating the discharges associated with the Permit and is reissuing the Permit for the first time post program transfer.

Section 301(a) of the Clean Water Act (CWA) and Alaska Administrative Code (AAC) 18 AAC 83.015 provide that the discharge of pollutants to water of the U.S. is unlawful except in accordance with an APDES permit. The Permit is being reissued consistent with 18 AAC 83. A violation of a condition contained in the permit constitutes a violation of the CWA and subjects the permittee of the facility with the permitted discharge to the penalties specified in Alaska Statutes (AS) 46.03.760 and AS 46.03.761.

1.3 Permit History

EPA first issued the Permit to Eni on October 25, 2012, which became effective January 1, 2013 (2013 Permit). The Permit made the discharge of wastewater into Simpson Lagoon available as a contingency in the event that preferred methods for wastewater disposal into an onsite Class I Underground Injection Control (UIC) wells was unavailable and means of transporting the wastewater onshore for disposal was also unavailable simultaneously due to broken ice conditions. When the 2013 Permit was issued, SID facilities were still in construction so limited information was available and development of the Permit was based on numerous assumptions. To ensure protection of water quality and human health, some limits included in the 2013 Permit were based on meeting water quality criteria at the point of discharge and others based on technological considerations that were believed to be appropriate based on available information at the time. To support the application for reissuance, the 2013 Permit required characterization of the effluent streams to verify assumptions, determine if existing limits were appropriate, and whether mixing zones should be authorized and different water quality-based effluent limits (WQBELs) imposed as a result.

During the term of the 2013 permit, DEC issued two minor permit modifications.
On August 12, 2013 the Department issued the first minor modification to update submittal processes in effect at that time for monitoring reports and to correct typographical errors. The Department issued the second minor modification on September 15, 2017 to implement Phase I of the EPA Electronic Reporting Rule consistent with Chapter 40 of the Code of Federal Regulations, Part 127 (40 CFR 127), which became effective November 1, 2017.

An administratively complete application for reissuance of the Permit was submitted by Eni on December 14, 2017 and an administrative extension of the Permit was issued by DEC on December 14, 2017.

2.0 Background

2.1 Facility Information

The facility is an offshore, man-made gravel island located in the Beaufort Sea near Spy Island, west of Prudhoe Bay, Alaska (Appendix A, Figure A.1). Depending on the season and operational plans, access to the island is via barge and crew boat (open water), hovercraft (broken ice conditions), or ice road (ice cover). To support oil and gas extraction, the facility includes a 120-person camp and associated infrastructure to house the workforce. The infrastructure related to this permit includes a reverse osmosis (RO) water treatment plant providing water for both potable and non-potable uses and a wastewater treatment plant (WWTP). Wastewater from the RO system (see process flow diagram in Appendix A, Figure A-3) and the WWTP (Appendix A, Figure A-4 and Figure A-5) are the only discharges authorized by the Permit and are authorized only as a contingency to other preferred disposal alternatives.

2.1.1 Primary Disposal Versus Contingency Discharges

The SID has an onsite Class I UIC well permitted for the deep subsurface disposal of certain non-hazardous waste material and wastewater. The standard practice at the SID is to dispose the treated domestic wastewater (Outfall 001) and the RO reject wastewater (Outfall 002) via injection into this onsite UIC well. If the UIC well is shut-in and there is

no means of transportation onshore via ice road or vessel (i.e., during broken ice conditions at breakup) for disposal into another Class I UIC well, then there would be no other option but to discharge into Simpson Lagoon. These contingency discharges would be directed to the ocean from either the WWTP or the RO Water treatment plant rather than from the wastewater storage tank for the UIC well. Outfall 001 and Outfall 002 would each be three-inch diameter hoses, possibly bundled together, that discharge onto the sloped island embankment where effluent eventually flows into Simpson Lagoon.

2.1.2 Outfall 001 – Domestic Wastewater

Domestic wastewater consists of wastewater from camp toilets, urinals, showers, eye wash stations, lavatory and kitchen sinks. Because the potable water distribution system feeds into these domestic wastewater sources, conditioning chemicals injected into the potable water and dissolved metals from corrosion in the distribution system could be included in the domestic wastewater (see discussion in Section 2.1.3). The domestic wastewater generated from the camp is treated by a WWTP that has a design capacity of 20,800 gallons per day (gpd) and consists of a strainer, a membrane bioreactor (MBR), and an ultraviolet (UV) disinfection unit. The treated wastewater is typically stored in a tank for disposal in the Class I UIC Well. Per Fact Sheet Section 2.1.1, the effluent from the WWTP would only be discharged to Simpson Lagoon as a contingency after losing other preferred disposal options. If discharge occurs, it is anticipated to be a continuous discharge directly from the WWTP rather than from the storage tank because the storage tank commingles other wastes intended for injection and could result in cross contamination with unanticipated constituents. Accordingly, the characterization of the domestic wastewater in Section 2.2.1 represents this direct discharge rather than the commingled wastewater from the storage tank.

2.1.3 Outfall 002 – RO Reject Wastewater

Brackish water is withdrawn from two groundwater wells completed at an angle of 45 degrees beneath the man-made gravel island. The vertical depths of the wells were approximately 85 feet and the wells were screened across gravel with silt, organics and sand. Particulates are removed from the brackish well water using a two-stage roughing filter system (50-micron and 5 micron cartridge filters). The filtered well water is then heated, injected with an antiscalant, and fed to an RO treatment unit that separates the feed water into permeate (fresh water) and the remaining concentrated brine (RO reject wastewater). The maximum anticipated flow rate of the reject wastewater is 111,500 gpd.

The antiscalant is Pretreat Plus®-0100, which is a proprietary formulation certified for drinking water production use and none of the ingredients are listed as potentially hazardous for occupational exposure or transportation. The RO reject wastewater is normally stored in the same wastewater storage tank used for treated domestic wastewater pending disposal in the Class I UIC well. Similar to Outfall 001, if the UIC well is shut-in and there is no means of transporting onshore for alternative disposal, the RO reject would need to be discharged into Simpson Lagoon. Because potable water is batch-treated and stored in potable water storage tanks for distribution, the RO reject wastewater would be an intermittent contingency discharge. The RO unit requires infrequent cleaning using a clean-in-place (CIP) system. The CIP system uses citric acid to dissolve scale buildup on the membranes and is neutralized using sodium hydroxide.

The CIP system waste is collected in a small tank before storing in the wastewater storage tank for injection.

In addition to RO, the fresh water permeate is subjected to UV disinfection and then the taste, alkalinity and acidity (pH) of the fresh water is adjusted using calcite (calcium carbonate) and hydrated lime (calcium hydroxide) to reduce the potential for downstream corrosion and leaching of metals that may be present in the plumbing system (e.g., copper and lead). Sodium hypochlorite is then added to the potable water prior to storage and distribution.

2.2 Effluent Characterization

When the original application for the 2013 Permit was submitted, the SID production facilities and infrastructure were still under construction, so the characteristics of the treated domestic wastewater and the RO reject wastewater had to be estimated. At the time, it was believed that the discharges could meet water quality criteria, and, thus the Permit was developed without authorization of mixing zones.

Because no wastewater was discharged during the 2013 Permit term, characterization of both the ambient receiving waterbody conditions and the contingent discharges was requested by DEC as part of the application for permit reissuance. The characterization included monitoring parameters potentially present in concentrations exceeding water quality criteria and parameters with maximum daily limits (MDLs) and average monthly limits (AMLs) in the 2013 Permit. Eni collected samples from each outfall effluent source and one sample of the receiving water from June through November 2017 and submitted those results with their application for permit reissuance. The following sections summarize the effluent characterization effort. Relevant receiving waterbody information is presented in the mixing zone analyses and the reasonable potential analyses (RPA) in Appendix B. The characterization of the domestic wastewater effluent that is authorized to be discharged through Outfall 001 is summarized and compared to the applicable 2013 Permit limits or marine water quality criteria in Table 1.

2.2.1 Outfall 001 – Domestic Wastewater

Per the 2013 Permit, Eni was to monitor the following parameters:

- pH measured in standard units (SU),
- five-day biochemical oxygen demand (BOD_5), total suspended solids (TSS), and dissolved oxygen (DO) measured in milligrams per liter (mg/L),
- fecal coliform (FC) bacteria measured in coliform forming units per 100 milliliters (CFU/100 ml), and
- enterococci bacteria measured in most probable number in 100 milliliters (MPN/100 ml).

At the request of the Department, Eni also analyzed samples of the domestic wastewater for the water quality parameters of temperature measured in degrees Celsius (°C), turbidity measured in nephelometric turbidity units (NTUs), salinity measured in parts per thousand (ppt), and both the total recoverable and dissolved concentrations measured in micrograms per liter (µg/L) for the following six metals: arsenic, cadmium, copper, lead, nickel, and zinc. Mercury was also analyzed in µg/L but as total. Implications concerning the 2013 Permit and results of characterization samples are discussed in subsequent sections.

Metals: Of the seven analyzed metals, only copper, nickel, and zinc were present in detectable concentrations and included in Table 1. Because the water criteria for these metals are expressed as dissolved concentrations, Table 1 summarizes only the reported dissolved phase. For nickel, the first sample result was below the method detection level of 15 µg/L due to matrix interference, which exceeded the chronic water quality criteria for nickel (i.e., not sufficiently sensitive per Section 4.4). After adjusting procedures to account for matrix interference, the remaining nickel sample results were detected above method detections limits but were lower than 15 µg/L. Therefore, less than (<) 15 µg/L was used as the maximum observed value for dissolved nickel.

Turbidity and Salinity: None of the domestic wastewater characterization sample results for turbidity and salinity exceeded the respective water quality criteria. Therefore turbidity and salinity are no longer considered parameters of concern (POC) for the domestic wastewater discharge and their results are not shown in Table 1.

Bacteria: The MBR and UV disinfection units of the WWTP are designed to effectively eliminate FC and enterococci bacteria from the domestic wastewater effluent stream. However, the effluent characterization samples initially resulted in anomalously high FC bacteria counts. Upon investigation by Eni, the high FC bacteria counts were determined to be from the accumulation of residual biosolids in the sample port after the same line was used to transfer biosolids for disposal. After flushing the sample port with typical wastewater treatment plant effluent, the submitted samples did not have unexpectedly high counts of FC bacteria. Due to the FC bacteria contamination of the sampling port, three of the ten FC bacteria samples were considered outliers and excluded from the effluent characterization. The characterization of Outfall 001 – Domestic Wastewater is shown in Table 1.

Table 1: Outfall 001 - Domestic Wastewater Effluent Characterization (June 2017 ─ November 2017)

Parameters with Discharge Limits					
Parameter	**Units**	**Data Set Size**	**Existing Limits**		**Observed Range (Low – High, Average)** [1]
			MDL	**AML**	
Flow	gpd	NA	20,800	─	No Discharge
pH	SU	6	6.5 ≤ pH ≤8.5		6.6 - 7.23, 7.11 [2]
DO	mg/L	6	6 ≤ DO ≤17		**4.5 - 5.94**, **5.4**
BOD_5	mg/L	5	60	30	All < 2.0
TSS	mg/L	1	60	30	< 2.0 - 2.0, 2.0
FC Bacteria	CFU/100 mL	7	43	14 [3]	< 2.0 - 6.0, 2.3 [3]
Enterococci Bacteria	MPN/100 mL	5	501 [4]	35 [3]	All < 1.0
Other Water Quality Parameters of Interest					
Parameter	**Units**	**Data Set Size**	**Criteria**		**Observed Range (Low – High, Average)**
			Acute	**Chronic**	
Copper	µg/L	6	4.8	3.1	**6.4 - 13**, **9.9**
Nickel	µg/L	6	74	8.2	3.4 - **< 15**, 6.0
Zinc	µg/L	6	90	81	26 - **160**, **87**
Temperature	°C	6	1 °C above ambient [5]		**20.2 - 23.3, 21.8**

Notes:
1. Bold values indicated exceedance of a permit limit or water quality criteria.
2. Median pH value displayed in lieu of average.
3. Reported as a geometric mean.
4. Note that for Enterococci bacteria, the instantaneous maximum water quality criterion was reduced to 130 CFU/100 mL as revised in 18 AAC 70 on February 5, 2017.
5. The reference critical ambient temperature conditions are taken to be represented by the 15th percentile of temperatures measured at Prudhoe Bay, or approximately -0.7 °C. Hence, the maximum observed temperature difference between the effluent and the 15th percentile of ambient temperature is 24 °C [23.3 – (-0.7) = 24].

Based on the characterization results of the domestic wastewater effluent at Outfall 001, the DO, copper, nickel, zinc and temperature exceeded water quality criteria at the point of discharge. Therefore mixing zone(s) appear to be necessary for these POCs. Based on the relative degrees of exceedance above the respective criteria, the concentrations of copper and nickel, and the temperature were identified as POCs that could drive the sizes of the chronic and acute mixing zones but not DO or zinc. The relative concentrations of zinc and DO indicate they would not be the driving parameter for either mixing zone. Accordingly, the POCs copper, nickel and temperature were further evaluated in the RPA, Appendix B.

2.2.2 Outfall 002 – RO Reject Wastewater

Under the terms of the 2013 Permit, Eni was to monitor flow, temperature, TSS, pH, and salinity. Similar to Outfall 001, there were no discharges from Outfall 002 during the term of the 2013 Permit. At the request of the Department, Eni conducted characterization of Outfall 002 for the permit application and collected samples for

turbidity, DO, and the following seven metals of interest: arsenic, cadmium, copper, lead, mercury, nickel, and zinc. Implications concerning the 2013 Permit and results of characterization samples are discussed in subsequent sections.

Metals: None of the seven tested metals were detected above the method detection limit. However, for copper and nickel, some of the initial results provided method detection limits higher than the respective chronic water quality criteria. After modifications by laboratory, in subsequent samples, the resulting method detection limits for copper and nickel were less than the acute and chronic water quality criteria. Based on this information, both nickel and copper were eliminated as POCs.

Salinity: The 2013 Permit established a limit for salinity that referenced ambient salinity, which had not been evaluated at the time. The permittee collected a recent representative sample from the receiving water during breakup. Using the recent salinity value of 21 ppt from the single receiving water characterization sample, the discharge limit would be a maximum allowable variance of 4 ppt above natural salinity. As a result, the salinity criterion used for effluent characterization purposes is 25 ppt.

The characterization data for the RO reject wastewater indicated the salinity ranged from < 0.1 to 94 ppt. The feed water comes from brackish groundwater from two different wells in the same aquifer formation. Given the feed water to the RO is from a single brackish aquifer, the Department questions the validity that salinity from the aquifer could have a range spanning three orders of magnitude and inclusion of these results could statistically affect characterizing maximum expected concentrations for salinity in the discharge. Even if the results are valid, it would then appear there are two different sources of which DEC desires to characterize the source with the highest salinity. Therefore, DEC considered the five low values as non-representative outliers and did not include them in Table 2.

TSS and Turbidity: The 2013 Permit included technology-based effluent limits (TBELs) for TSS that were developed using case-by-case best professional judgment (BPJ) without specific data to characterize the effluent based on the feed water to the RO water treatment plant. The TBELs established for TSS were an MDL of 60 mg/L and an AML of 30 mg/L. Because there is no water quality criterion for TSS, DEC required the applicant to also characterize the RO reject wastewater for turbidity, a similar parameter for which there is a marine water quality criterion of 25 NTUs. Turbidity and TSS are similar in that they both refer to particles suspended in water. Turbidity is determined by the amount of light scattered by these suspended particles, whereas TSS is a specific measurement of the mass of all suspended solids in a volume of water.

In the characterization, turbidity was measured both immediately in the field and later, after sample shipment and receipt in an analytical laboratory. A disparity in values became apparent when comparing the field-measured against laboratory-measured turbidity levels, with laboratory values consistently being significantly higher than the field values. All of the laboratory-measured turbidity levels were higher than the applicable water quality criterion, while none of the field-measured turbidity levels approached the criterion. Meanwhile, the TSS measurements were also notably higher than the TBEL established in the 2013 Permit using case-by-case BPJ. When Eni

investigated these anomalies, Eni noted that the laboratory reported the samples to be orange-tinted, indicative of possible iron precipitates.

The raw feed water for the RO water treatment plant is sourced from a brackish aquifer, which naturally contains dissolved minerals. Field observations indicated that the samples were clear upon collection. Although iron analysis was not required in the characterization because there is not a marine iron criterion, the current hypothesis is that the RO reject wastewater contains dissolved iron that becomes oxidized and forms precipitates after sample collection, which would affect both TSS and turbidity measured at the laboratory. For this reason, the field turbidity is reported separately from the laboratory turbidity for illustration. Given the likelihood that the RO reject wastewater will become oxidized and form iron precipitates upon discharging to an oxygen-rich receiving water, DEC assumes the laboratory measured turbidity is a conservatively representation of the discharged effluent quality until more information can be collected.

Temperature: Lastly, the 2013 Permit established a temperature limit of 15 °C. Although the temperature limit was appropriate given the understanding of the effluent characteristics at that time, DEC is comparing new temperature data against a more stringent water quality criterion for comparison in Table 2.

Table 2: Outfall 002 - RO Reject Wastewater Characterization (June 2017 ─ November 2017)

Parameters with Discharge Limits					
Parameter	**Units**	**Data Set Size**	**Existing Limits**		**Observed Range (Low – High, Average) [1]**
			MDL	**AML**	
Flow	gpd	NA	111,500	─	No Discharge
pH	SU	10	6.5 ≤ pH ≤8.5		6.96 - 7.34, 7.13 [2]
TSS	mg/L	4	60	30	**78 - 100, 91**
Temperature	°C	9	Not to exceed 15		**3.3 - 8.0, 5.4**
Salinity	ppt	4 [3]	25 [4]		**41 - 93.8, 75**
Other Water Quality Parameters of Interest					
Parameter	**Units**	**Data Set Size**	**Criteria**		**Observed Range (Low – High, Average) [1]**
Turbidity (Laboratory)	NTU	5	≤ 25		**94.2 - 360, 243**
Turbidity (Field)	NTU	6	≤ 25		1.32 - 5.76, 3.3
DO	mg/L	6	6 ≤ DO ≤17		**2.25 - 5.73, 3.7**
Temperature	°C	9	1 °C above ambient [5]		**3.3 - 8.0, 5.4**

Notes:

1. Bold values indicate an exceedance of a permit limit or water quality criteria
2. Median pH value displayed in lieu of average
3. Five of the nine salinity samples were deemed unrepresentative and were not used for effluent characterization
4. The maximum allowable variation above natural salinity is 4 ppt. Using the single representative salinity observation for ambient salinity (21 ppt), the most stringent salinity constraint is 25 ppt.
5. The reference critical ambient temperature conditions are taken to be represented by the approximate 15th percentile of temperatures measured at Prudhoe Bay, or approximately -0.7 °C. Hence, the maximum observed temperature difference between the effluent and the 15th percentile of ambient temperature is 8.7 °C [8.0 – (-0.7) = 8.7]

Given that all characterization results for TSS exceed existing TBELs, DEC believes these limits were prematurely determined in the 2013 Permit. Based on the remaining characterization results of the RO reject wastewater, the DO, temperature, turbidity and salinity of the effluent exceed the water quality criteria at the point of discharge, thereby indicating a need for chronic mixing zones for these parameters. Based on the relative degrees of exceedance of the respective criteria, the salinity and laboratory-measured turbidity are most likely to govern the chronic mixing zone size and have been evaluated in the RPA in Appendix B. However, DO and temperature do not exceed criteria to the degree that they could be the driving parameters for the mixing zones and have not been included in the RPA.

2.3 Compliance History

Facility compliance with the 2013 Permit from January 2012 through December 2017 was reviewed. There were no discharges during the permit term, and accordingly, there were no exceedances of permit limits. In addition, there were no reporting violations by the permittee during the same time period of the review.

3.0 Receiving Waterbody

3.1 Water Quality Standards

Section 301(b)(1)(C) of the CWA requires the development of limits in permits necessary to meet water quality standards (WQS) by July 1997. Per 18 AAC 83.435, conditions in permits must ensure compliance with Alaska WQS. The WQS are composed of waterbody use classifications, numeric and/or narrative water quality criteria, and an Antidegradation Policy. The waterbody use classification system designates the beneficial uses that each waterbody is expected to achieve. The numeric and/or narrative water quality criteria are the criteria deemed necessary by the State to support the beneficial use classification of each waterbody. The Antidegradation Policy ensures that the beneficial uses and existing water quality are maintained.

Waterbodies in Alaska are designated for all uses unless the water has been reclassified under 18 AAC 70.230, as listed under 18 AAC 70.230(e). Some waterbodies in Alaska can also have site–specific water quality criteria per 18 AAC 70.235, such as those listed in 18 AAC 70.236(b). At the location of the discharge from the permitted facility into Simpson Lagoon, the Department has determined that there has been no reclassification of designated use nor have site-specific water quality criteria been established. Therefore, the Department has determined that all marine use classes must be protected within Simpson Lagoon. These marine use classes include: water supply; water recreation; growth and propagation of fish, shellfish, other aquatic life, and wildlife; and harvesting for consumption of raw mollusks or other raw aquatic life.

3.2 Water Quality Status of Receiving Water

Any part of a waterbody for which the water quality does not, or is not, expected to meet applicable water quality criteria is defined as a “water quality limited segment” and placed on the State’s impaired waterbody list. Section 303(d) of the CWA requires states to develop a Total Maximum Daily Load (TMDL) management plan for an impaired waterbody. The TMDL management plan documents the amount of a pollutant (the load) a waterbody can assimilate without violating WQS and allocates that load to known point sources and nonpoint sources.

Simpson Lagoon is a subset of the Beaufort Sea. The waterbody described as the Nearshore Beaufort Lagoons, from the Sagavanirktok River to Simpson Lagoon, was categorized in 2003 as having been previously identified as impaired for temperature and salinity but attaining water quality standards for designated uses in *Alaska’s Final 2010 Integrated Water Quality Monitoring and Assessment Report* (Alaska 2010b). Accordingly, a TMDL has not been established for Simpson Lagoon.

3.3 Mixing Zone Analysis

Per 18 AAC 70.240 – 70.270, as amended through June 23, 2003, the Department may authorize a mixing zone in an APDES permit. Due to the limited data available at the time of application for the 2013 Permit, it was thought that the discharges would meet water quality criteria at the point of discharge based on assumptions made as part of permit development. However, the effluent characterization information recently collected and submitted with the application for permit reissuance indicates the need for establishing mixing zones. Therefore, the applicant submitted a mixing zone application and technical analysis (SLR 2017) with the permit reissuance application on December 14, 2017.

Determination of the mixing zones requires an evaluation of critical conditions of the flow regimes of the receiving waterbody, contingent discharge rates, effluent characteristics, and resulting concentration projections in the receiving water. The mixing zone application provided information to demonstrate consistency with state mixing zone regulations. The Department reviewed the application and conducted an independent analysis using *CORMIX Version 10.0.2.0* to verify conformance with regulations and consistency with DEC mixing zone procedures. *CORMIX* is a software system for assessing the mixing zones resulting from point source discharges and predicts mixing behavior and plume geometry. Through the independent analysis discussed in Section 3.3.1, the Department determined that some modifications to the mixing zone size recommendations were warranted for Outfall 001 and Outfall 002.

The Mixing Zone Analysis Checklist (Appendix D) outlines the criteria that must be considered and met per mixing zone regulations for the Department to authorize a mixing zone. These criteria include the size of the mixing zone, treatment technology, existing uses of the waterbody, human consumption, spawning areas, human health, aquatic life, and endangered species. The following summarizes the Department's regulatory mixing zone analysis.

3.3.1 Size

3.3.1.1 Outfall 001

The mixing zone application identified copper as the parameter driving the sizes of both the acute and chronic mixing zones for Outfall 001. However, DEC determined that copper was the driving parameter for the acute mixing zone but not the chronic. Using the most conservative temperature criterion of an increase over ambient of no more than 1 °C, the Department determined the size of the chronic mixing zone is governed by the maximum expected temperature difference (ΔT), defined as the effluent temperature minus the ambient receiving water temperature at the time of discharge. The Department used the maximum observed temperature (23.3 °C) and the critical receiving water temperature based on the approximate 15th percentile receiving water temperature, (-0.7 °C) to calculate the probable maximum ΔT of 24 °C used in the independent analysis for the chronic mixing zone determination. For the acute mixing zone, the Department used the probable maximum concentration of copper in the effluent and 15 percent (%) of the chronic water quality criteria for the receiving water concentration. DEC policy is to use 15% of the chronic water quality criteria for critical ambient conditions when there is no receiving water data (see the RPA in Appendix B). Based on these modifications in the modeling for Outfall 001, the Department is authorizing a 2-meter radius acute mixing zone centered below the outfall at the base of the island embankment with a dilution factor of 9.0 and a 14.5-meter radius chronic mixing zone with a dilution factor of 23.75. The acute mixing zone includes copper and zinc while the chronic mixing zone includes temperature, DO, copper, zinc, and nickel. Both the acute and chronic mixing zones extend outward from the waters edge of the gravel pad and extend from the seafloor to the sea surface.

3.3.1.2 Outfall 002

After considering ambient and effluent critical conditions between turbidity and salinity, DEC determined that salinity is the driving parameter for the chronic mixing zone for Outfall 002. Due to the questionable representativeness of the low salinity

effluent concentrations as discussed in Section 2.2.2, the Department assumed these values were outliers and removed them from the dataset. This resulted in a conservative maximum expected salinity value different than recommended in the application, with salinity becoming the driving parameter for the size of the chronic mixing zone for the RO reject wastewater at Outfall 002. Based on the probable maximum expected salinity used by DEC, the Department is authorizing a chronic mixing zone for Outfall 002 with a 61.5-meter radius centered below the outfall at the base of the island embankment and extending from the seafloor to the sea surface, with an authorized dilution factor of 83. The chronic mixing zone includes salinity, turbidity, DO, and temperature. None of the POCs had associated acute criteria so no acute mixing zone is necessary for Outfall 002.

3.3.1.3 Regulatory Size Constraints

Per 18 AAC 70.255, water quality criteria must be met at, and beyond, the boundaries of the mixing zones and a discharge may not reasonably be expected to cause lethality to passing organisms. To protect against acute effects, the 1-hour average exposure concentrations should not exceed the acute criteria. In many situations, travel time through the acute mixing zone must be less than 15 minutes if a 1-hour average exposure concentration is not to exceed the acute criterion (USEPA 1991). Therefore, 15 minutes is typically considered the minimum exposure time for lethality to occur in acute mixing zones. The mixing zone model was based on a maximum current velocity of 10 centimeters per second (cm/s). Conservatively using 10% of the maximum current velocity to represent the lowest current expected, 1 cm/s, and the acute mixing zone diameter of 4 meters for Outfall 001, a drifting organism would traverse the acute zone in 400 seconds, or 6.7 minutes. Therefore lethality is not expected to occur for organisms drifting through the acute mixing zone. Accordingly, applicable water quality criteria protecting human health and aquatic life would be met at and beyond the boundaries of the mixing zones.

Per 18 AAC 70.255(e), the size of the mixing zones must meet certain applicable width and area restrictions. The mixing zones are less than 10 percent of the width of Simpson Lagoon and they are also less than 10 percent of the surface area of Simpson Lagoon. Accordingly, the mixing zones for Outfalls 001 and 002 are appropriately sized.

Mixing zone modeling indicates that mixing zones smaller than those authorized would not be adequate to allow for sufficient mixing with the receiving water to meet the relevant criteria at the boundaries. Per 18 AAC 70.240(a)(2), the mixing zones have been sized to be as small as practicable.

3.3.2 Technology

Per 18 AAC 70.240(a)(3), the Department is required to determine if “an effluent or substance will be treated to remove, reduce, and disperse pollutants, using methods found by the Department to be the most effective and technologically and economically feasible, consistent with the highest statutory regulatory treatment requirements” before authorizing a mixing zone. Applicable “highest statutory and regulatory requirements” are defined in 18 AAC 70.990(30) [2003]. Accordingly, there are three parts to the definition, which are:

- Any federal TBEL identified in 40 CFR 125.3 and 40 CFR 122.29, as amended through August 15, 1997, adopted by reference at 18 AAC 83.010;
- Minimum treatment standards in 18 AAC 72.040; and
- Any treatment requirement imposed under another state law that is more stringent than the requirement of this chapter.

The first part of the definition includes all applicable federal technology-based effluent limit guidelines (ELGs) that may be adopted by reference at 18 AAC 83.010(g)(3) or TBELs developed using case-by-case BPJ. TBELs for Outfall 001 based on ELGs include no floating solids, foam, or garbage per 40 CFR 435.44 applying best conventional pollutant control technology (BCT). However, the ELGs for total residual chlorine were determined not to be applicable to the discharge of Outfall 001 because the domestic wastewater treatment system includes a membrane bioreactor and a UV disinfection unit that effectively remove FC bacteria without using chlorine. There are no other ELGs applicable to discharges under the Permit. For Outfall 001, DEC establishes TBELs using case-by-case BPJ for TSS and BOD_5 citing 18 AAC 72.050 as discussed below. For Outfall 002, the 2013 Permit established a TBEL using case-by-case BPJ for TSS. However, that TBEL is being removed from the Permit based on new information indicating it was a technical mistake (see Fact Sheet Section 4.0).

The second part of the definition is in error. The correct reference appears to be 18 AAC 72.050, minimum treatment for domestic wastewater. Since the discharge from Outfall 001 consists of domestic wastewater, the minimum treatment standards of 18 AAC 72.050 are applicable and the TBELs established in the Permit reflect these same requirements. Accordingly, the second part of the definition has been met.

The third part of the definition includes any treatment required by state law that is more stringent than 18 AAC 70. Other regulations beyond 18 AAC 70 that may apply to this permitting action include 18 AAC 83, 18 AAC 72 and 18 AAC 15. The Permit is consistent with 18 AAC 83 and neither the regulations in 18 AAC 15, 18 AAC 72, nor another state legal requirement that the Department is aware of impose more stringent treatment requirements than 18 AAC 70. Therefore, the third and final part of the definition has also been met.

3.3.3 Existing Use

Per 18 AAC 70.245, the mixing zone has been appropriately sized to fully protect the existing uses of Simpson Lagoon. Water quality criteria are developed to ensure protection of existing uses. The chronic mixing zones have been appropriately sized to ensure water quality criteria will be met at, and beyond, the boundaries of the mixing zones. Accordingly, the mixing zone results in the protection of the existing uses of the waterbody as a whole.

3.3.4 Human Consumption

Per 18 AAC 70.250(b)(2) and (b)(3), the pollutants discharged cannot produce objectionable color, taste, or odor in aquatic resources harvested for human consumption; nor can the discharge preclude or limit established processing activities or commercial, sport, personal use, or subsistence fish and shellfish harvesting. The mixing zone is not authorized in a location where aquatic resources are harvested or that could result

precluding or limiting established processing activities or commercial, sport, personal use, or subsistence fish and shellfish harvesting. In addition, there is no indication that the pollutants discharged would produce objectionable color, taste, or odor in aquatic resources harvested for human consumption if such resources existed in the vicinity of the mixing zone.

3.3.5 Spawning Areas

Per 18 AAC 70.225(h), a mixing zone is not authorized in an area of anadromous fish spawning or resident fish for spawning redds. Because the permit does not authorize the discharge of effluent to open waters of a freshwater lake, river, or other flowing freshwater, there are no associated discharges to anadromous fish spawning areas or the resident freshwater fish listed in the regulation.

3.3.6 Human Health

Per 18 AAC 70.250 and 18 AAC 70.255, the mixing zone authorized by a permit shall be protective of human health. An analysis of the effluent data submitted with application for reissuance indicate that human health criteria are met at the point of discharge for the applicable parameters with human health criteria. The quality of the effluent is expected to continue to meet human health criteria such that authorization of the mixing zones are protective of human health.

3.3.7 Aquatic Life and Wildlife

Per 18 AAC 70.250(a)(2)(A-C), 18 AAC 70.250(b)(1), 18 AAC 70.255(g)(1) and (2), and 18 AAC 70.255(b)(1) and (2), pollutants for which the mixing zone will be authorized will not result in concentrations that result in undesirable conditions or nuisance to aquatic life, cause permanent or irreparable displacement of indigenous organisms, or a reduction in fish or shellfish population levels. Nor will the discharge result in adverse effects on threatened or endangered species or anadromous fish, form a barrier to migration, or prevent zone of passage in the receiving water. As discussed in Section 3.3.1.3, the mixing zone has been sized to prevent lethality to drifting organisms and other acute effects and will not create a barrier to migration or prevent passage. None of the pollutants and their concentrations identified in Section 2.2 present concerns that there will be undesirable conditions, present a nuisance, cause permanent or irreparable displacement of indigenous organisms, or reduce fish or shellfish populations. The Department therefore concludes aquatic life and wildlife will be maintained and protected.

3.3.8 Endangered Species

Per 18 AAC 70.250(a)(2)(D), the authorized mixing zone will not cause an adverse effect on threatened or endangered species. Species listed under the Endangered Species Act (ESA) that have some potential to be in the vicinity of the mixing zone are discussed in Section 8.1. Based on an understanding of the threatened and endangered species in the vicinity of the discharge and the potential affects the authorized discharges represent, the authorization of the mixing is not likely to cause an adverse effect.

4.0 Effluent Limits and Monitoring Requirements

4.1 Basis For Permit Effluent Limits

Per 18 AAC 83.015, the Department prohibits the discharge of pollutants to waters of the U.S. unless the permittee has first obtained a permit issued by the APDES Program that both meets the purposes of Alaska Statute 46.03 and is in accordance with the CWA Section 402. Per these statutory and regulatory provisions, the Permit includes effluent limits that require the discharger to (1) meet standards reflecting levels of technological capability, (2) comply with WQS set forth in 18 AAC 70, and (3) comply with other state requirements that may be more stringent. The CWA requires that the effluent limits for a particular pollutant be the more stringent of either TBELs or WQBELs. Per Appendix C, the Permit includes TBELs for TSS, BOD_5, and floating solids, foam, and garbage for Outfall 001 – Domestic Wastewater. Outfall 001 also has WQBELs for pH, copper, and ΔT. Outfall 002 has WQBELs for pH, and Salinity but not TBELs; the TBEL for TSS established in the 2013 Permit is not being retained.

4.2 Effluent Limits and Monitoring Requirements

Per AS 46.03.110(d), the Department may specify in a permit the terms and conditions under which waste material may be disposed. The Permit includes monitoring requirements so that compliance with effluent limits can be determined, but may also be required to characterize the effluent and to assess impacts to the receiving water. Sufficiently sensitive methods as required in 40 CFR 136 are required for analyzing collected samples. The following sections provide the effluent limits and monitoring requirements for Outfalls 001 and 002. See Appendix C for the calculations used to derive limits.

4.2.1 Outfall 001 – Domestic Wastewater

Table 3: Effluent Limits and Monitoring Requirements for Domestic Wastewater (Outfall 001)

Parameter (Units)	Effluent Limits		Monitoring Requirements	
	MDL	AML	Frequency	Type
Flow (gpd)	20,800	---	Daily [1]	Measured/Recorded
Floating Solids, Foam & Garbage	No Discharge		Daily [1]	Visual
pH (SU)	6.5 ≤ pH ≤8.5		Monthly	Grab
BOD_5 (mg/L)	60	30	Monthly	Grab
TSS (mg/L)	60	30	Monthly	Grab
Temperature Difference (° C)	39	---	Monthly	Grab
Copper (µg/L)	48	24	Monthly	Grab

Note: 1. Daily while discharges occur. Observations must be made during daylight hours and recorded in the operators log for the WWTP.

4.2.2 Outfall 002 – RO Reject Water

Table 4: Effluent Limits and Monitoring Requirements for RO Reject Wastewater (Outfall 002)

Parameter (Units)	Effluent Limits		Monitoring Requirements	
	MDL	AML	Frequency	Type
Flow (gpd)	111,500	---	Daily [1]	Measured/Recorded
pH (SU)	6.5 ≤ pH ≤8.5		Monthly	Meter or Grab
Salinity (ppt)	580	289	Monthly	Grab
Note: 1. Daily while discharges occur. Observations must be made during daylight hours and recorded in the operators log for the RO water treatment plant.				

The characteristics of the RO reject wastewater described in Section 2.1.3 did not include the possibility of commingling with neutralized CIP wastewater or other wastes that are typically disposed via Class I UIC well injection via the onsite storage tank. The CIP schedule does not require frequent cleaning and can be coordinated such that it would not be necessary to include it in discharge. To ensure the neutralized CIP wastewater, or other unauthorized discharge sources, does not become commingled with the contingency discharges, the Permit prohibits the discharge of CIP wastewater or commingled wastewater from the UIC storage tank. In addition, the permittee must develop specific Best Management Practices (BMPs), operating procedures, concerning operation of the CIP system while a contingency discharge is necessary (see Section 7.3.1).

In addition to the discharge monitoring requirements for determining compliance with the permit conditions, the Department is also requiring additional monitoring to provide data for further characterize the effluent prior to submitting the next application for reissuance. Specifically, the Department is requiring the collection of turbidity measurements for the RO reject wastewater to evaluate the relationship, if any, between the turbidity and TSS. In addition, both field- and laboratory-measured turbidity should be collected to provide further information which could be used to inform future reissuance of the permit, if necessary (See Sections 4.4 and 7.4).

4.3 Electronic Discharge Monitoring Reports

4.3.1 E-Reporting Rule, Phase I (DMRs)

The permittee must submit a discharge monitoring report (DMR) for each month by the 28th day of the following month. DMRs shall be submitted electronically through NetDMR per Phase I of the E-Reporting Rule (40 CFR 127). Authorized persons may access permit information by logging into the NetDMR Portal (https://cdxnodengn.epa.gov/oeca-netdmr-web/action/login). DMRs submitted in compliance with the E-Reporting Rule are not required to be submitted as described in Appendix A of the Permit (Standard Conditions) unless requested or approved by the Department. Any DMR data required by the Permit that cannot be reported in a NetDMR field (e.g. mixing zone receiving water data, etc…), shall be included as an attachment to the NetDMR submittal. DEC has established an e-Reporting information website at http://dec.alaska.gov/water/Compliance/EReportingRule.htm that contains general information about this new reporting format. Training materials and webinars for NetDMR can be found at https://netdmr.zendesk.com/home.

4.3.2 E-Reporting Rule, Phase II (Other Reporting)

Permittees will integrate electronic reporting for all other reports required by the Permit (e.g., Annual Reports and Certifications) and implementation is expected during the term of the Permit. Permittees should monitor DEC's E-Reporting website (http://dec.alaska.gov/water/Compliance/EReportingRule.htm) for updates on Phase II of the E-Reporting Rule and will be notified when they must begin submitting all other reports electronically. Until such time, other reports required by the Permit may be submitted in accordance with Permit Appendix A – Standard Conditions.

4.4 Effluent Monitoring

Additional monitoring is required during the last two years of the Permit term to support the next application for reissuance (see Fact Sheet Section 7.4). Samples collected to support the next application must use sufficiently sensitive methods. The permittee also has the option of taking more frequent samples than required for compliance under the Permit, or DEC may request this additional information. These additional samples can be used for averaging if they are conducted using the Department-approved test methods (generally found in 18 AAC 70 and 40 CFR 136 [adopted by reference in 18 AAC 83.010]), and if the method detection limits are less than the effluent limitations and are sufficiently sensitive. Per 40 CFR 122.21(a)(3), a method approved under 40 CFR 136 is sufficiently sensitive when:

A) The method minimum level (ML) is at or below the level of the applicable water quality criterion for the measured parameter, or

B) The method ML is above the applicable water quality criterion, but the amount of the pollutant or pollutant parameter in the discharge is high enough that the method detects and quantifies the level of the pollutant or pollutant parameter in the discharge (e.g., not applicable to effluent or receiving water monitored for characterization), or

C) The method has the lowest ML of the analytical methods approved under 40 CFR 136 for the measured pollutant or pollutant parameter (e.g., the receiving water concentration or the criteria for a given pollutant or pollutant parameter is at or near the method with the lowest ML).

When data is being collected to characterize effluent or receiving water, a sufficiently sensitive method must be used that allows comparison of results with applicable water quality criteria. During the term of the existing Permit, some of the data collected for metals failed to meet this objective. During the next permit term, the permittee must amend the Quality Assurance Project Plan (QAPP) to include procedures for sample collection and analytical methods that are sufficiently sensitive and achieve required method detection limits. All data collected during the Permit term must be provided to the Department with the next Permit application for reissuance. This information is necessary to render the application technically complete and to adequately characterize the effluent and receiving water for conducting an RPA.

5.0 Antibacksliding

Per 18 AAC 83.480, "effluent limitations, standards, or conditions must be at least as stringent as the final effluent limitations, standards, or conditions in the existing Permit." Per 18 AAC 83.480, a permit

may not be reissued "to contain an effluent limitation that is less stringent than required by effluent guidelines in effect at the time the Permit is renewed or reissued."

Effluent limitations may be relaxed as allowed under 18 AAC 83.480, CWA Section 402(o) and CWA Section 303(d)(4). 18 AAC 83.480(b) allows relaxed limitations in renewed, reissued, or modified permits when there have been material and substantial alterations or additions to the permitted facility that justify the relaxation, or, if the Department determines that technical mistakes were made.

CWA Section 303(d)(4)(A) states that, for waterbodies where the water quality does not meet applicable WQS, effluent limitations may be revised under two conditions, the revised effluent limitation must ensure the attainment of the WQS (based on the waterbody TMDL or the waste load allocation) or the designated use which is not being attained is removed in accordance with the WQS regulations.

CWA Section 303(d)(4)(B) states that, for waterbodies where the water quality meets or exceeds the level necessary to support the waterbody's designated uses, WQBELs may be revised as long as the revision is consistent with the State's Antidegradation Policy. Even if the requirements of CWA Section 303(d)(4) or 18 AAC 83.480(b) are satisfied, 18 AAC 83.480(c) prohibits relaxed limits that would result in violations of WQS or ELGs (if applicable).

State regulation 18 AAC 83.480(b) only applies to effluent limitations established on the basis of CWA Section 402(a)(1)(B), and modification of such limitations based on effluent guidelines that were issued under CWA Section 304(b). Accordingly, 18 AAC 83.480(b) applies to the relaxation previously established case-by-case TBELs developed using BPJ. To determine if backsliding is allowable under 18 AAC 83.480(b), the regulation provides five regulatory criteria [18 AAC 83.480(b)(1-5)] that must be evaluated and satisfied.

The 2013 Permit established TBELs developed using case-by-case BPJ for TSS based on estimated typical characteristics of the feed water to the RO water treatment plant for Outfall 002. Actual characterization data collected to support the application for permit reissuance indicates that the feed water is not typical and apparently has dissolved metals that precipitate causing unusually high concentrations of TSS. If these characteristics were known at the time of issuing the 2013 Permit, these typical TSS TBELs would not have been applied because they are not attainable. Therefore, DEC is removing these TBELs previously developed using case-by-case BPJ and incorrect assumptions that resulted in a technical mistake per 18 AAC 83.480(b)(2).

6.0 Antidegradation

CWA Section 303(d)(4) states that, for waterbodies where the water quality meets or exceeds the level necessary to support the designated uses of the waterbody, WQBELs may be revised as long as the revision is consistent with the State Antidegradation Policy.

The Antidegradation Policy per 18 AAC 70.015 states that the existing water uses and the level of water quality necessary to protect existing uses must be maintained and protected. This section of the fact sheet analyzes and provides rationale for the Department decision to reissue the Permit with respect to the Antidegradation Policy.

The Department's approach to implementing the Antidegradation Policy, found in 18 AAC 70.015, is currently based on the Department's *Policy and Procedure Guidance for Interim Antidegradation Implementation Methods (Interim Methods)*, dated July 14, 2010 (Alaska 2010a). Note that the Lieutenant Governor signed and filed Antidegradation Implementation Methods regulations on March 7, 2018 with an effective date of April 6, 2018. The regulations were subsequently submitted to EPA on March 9, 2018 for review and approval. The new regulations may not be used for CWA purposes (e.g., APDES permits) until EPA approves the regulations for use in such purposes. As such, until the new regulations are approved by EPA for use in APDES permitting, the existing *Interim Methods* will be used in conjunction with the application of the Antidegradation Policy.

Using current procedures and policies, the Department determines whether a waterbody, or portion of a waterbody, is classified as Tier 1, Tier 2, or Tier 3, where a higher numbered tier indicates a greater level of water quality protection. At this time, no Tier 3 waters have been designated in Alaska. The receiving water for discharges from the facility is Simpson Lagoon in Prudhoe Bay. Based on review of available information, the Department has determined Simpson Lagoon is subject to a Tier 2 antidegradation analysis.

Based on 18 AAC 70.015 (a)(2) the State may allow reduction of water quality only after finding that the following five specific criteria, A through E, are met as follows:

1. **Per 18 AAC 70.015 (a)(2)(A). Allowing lower water quality is necessary to accommodate important economic or social development in the area where the water is located.**

   Based on the evaluation required per 18 AAC 70.015(a)(2)(D), the Department has determined that the most reasonable and effective pollution prevention, control, and treatment methods are being used and that the localized lowering of water quality is necessary.

   The Alaska Oil and Gas Association (AOGA) study on the impact of the oil and gas industry to the Alaskan economy (AOGA Study) published in 2017 (AOGA 2017) indicates that the oil and gas industry in 2016 and 2017 continued to be single largest source of state revenue while significantly contributing to state-wide and local economies. The oil and gas industry is the top employer in the North Slope Borough (the Borough), generating 1,845 direct, support, or indirect jobs with wages paid totaling $105 million in 2016. In addition, the oil and gas industry paid $373.3 million in property taxes to the Borough in 2016, contributing 97% of total Borough tax revenues which support Borough social development programs benefiting Borough residents.

   Eni owns and operates the offshore SID which, along with the associated onshore Oliktok Point Production Pad (OPP), is located within the Nikaitchuq Unit and Kuparuk River Unit, respectively. In 2016, the Nikaitchuq unit produced 25,000 barrels of oil per day, accounting for approximately 5% of statewide oil production. Eni is currently conducting additional exploration drilling operations from the SID into Federal offshore leases in hopes of further increasing oil production from the existing facility.

   Eni's investment in the infrastructure and leases in the Nikaitchuq Unit as well as other oil production units in the Beaufort Sea area demonstrates their intent to continue their existing, and to potentially increase, oil production in the area. The continued production of oil in the area supports the economic and social well-being of the North Slope residents as well as Alaskan residents state-wide.

The Department finds that the requirements of this part of the antidegradation analysis have been met.

2. **Per 18 AAC 70.015 (a)(2)(B). Except as allowed under this subsection, reducing water quality will not violate the applicable criteria of 18 AAC 70.020 or 18 AAC 70.235 or the whole effluent toxicity limit in 18 AAC 70.030.**

The Department evaluated the effluent characteristics and compared it to applicable criteria for the protected water use classes set forth in 18 AAC 70.020 while establishing permit limits and conditions. The Department has authorized an appropriately sized acute mixing zone based on copper concentrations and a chronic mixing zone based on the temperature for Outfall 001 – Domestic Wastewater. Similarly, the Department also has authorized an appropriately sized mixing zone based on salinity for Outfall 002 – RO Reject Wastewater. The Department developed the size of each authorized mixing zone to ensure water criteria will be met at, and beyond, the boundary of the authorized mixing zones. Therefore, the localized reduction of water quality will not violate the applicable water quality criteria in 18 AAC 70.020.

As discussed in Section 3.1, site-specific criteria per 18 AAC 70.235 is not applicable to the waterbody where the discharges occur. Lastly, chronic WET limits 18 AAC 70.030 have not been imposed in the Permit. The characterization of the discharges in Section 2.2 indicates the nature of the effluent is not toxic to aquatic life and the limits developed in Appendix C are adequate to control toxic effects. DEC concludes that this finding has been met.

3. **Per 18 AAC 70.015(a)(2)(C). The resulting water quality will be adequate to fully protect existing uses of the water.**

Water quality criteria are established such that, if the criteria are met, the uses of the waterbody will be protected. DEC developed and incorporated narrative and numeric permit limits based on meeting the most stringent water quality criteria applicable to all uses of the waterbody. Because the acute and chronic mixing zones were developed so that the criteria are met at, and beyond, the mixing zone boundaries, the uses of the waterbody as a whole are being protected.

The Department concludes the requirement that the resulting water quality be adequate to protect existing uses of the water has been met.

4. **18 AAC 70.015(a)(2)(D). The methods of pollution prevention, control, and treatment found by the Department to be most effective and reasonable will be applied to all wastes and other substances to be discharged.**

The domestic wastewater treatment system at SID is an MBR capable of providing high-quality effluent with respect to treating BOD_5, TSS, and bacteria. Although the MBR forms an effective barrier to bacteria, a UV system provides secondary assurance of meeting bacteria criteria as well as removal of solids associated with BOD_5 and TSS. Removal efficiencies from MBRs are typically over 90 %.

The RO water treatment plant produces potable water using feed water from a brackish groundwater aquifer source by filtering out ions and cations, leaving permeate so devoid of constituents it must be augmented with alkalinity and hydroxides to condition the water for corrosion control. The reject is a concentrated version of the feed water containing the ions and cations removed by RO and concentrations of antiscalant needed to help prevent scaling inside the membranes. The reject water does not require treatment based on the characterization of the wastewater and is best controlled using proper chemical selection for the antiscalant and BMPs.

The Permit requires the permittee to develop a BMP Plan and implementation schedule, described in more detail in Section 7.3, to achieve the most effective and reasonable control of the substances discharged.

The Department has determined that the most reasonable and effective pollution prevention, control, and treatment methods are being used.

5. **18 AAC 70.015(a)(2)(E). All wastes and other substances discharged will be treated and controlled to achieve (i) for new and existing point sources, the highest statutory and regulatory requirements; and (ii) for nonpoint sources, all cost-effective and reasonable best management practices.**

Applicable "highest statutory and regulatory requirements" are defined in 18 AAC 70.990(30), as amended through June 26, 2003. Accordingly, there are three parts to the definition, which are:

- Any federal TBEL identified in 40 CFR 125.3 and 40 CFR 122.29. as amended through August 15, 1997, adopted by reference at 18 AAC 83.010;
- Minimum treatment standards in 18 AAC 72.040; and
- Any treatment requirement imposed under another state law that is more stringent than the requirement of this chapter.

The first part of the definition includes all applicable federal ELGs adopted by reference at 18 AAC 83.010(g)(3) or TBELs developed using case-by-case BPJ. As discussed in Section 3.3.2, there are no applicable federal ELGs for Outfall 002 - RO Reject Wastewater and the TBEL established using case-by-case BPJ for TSS is being removed from the Permit. For Outfall 001 – Domestic Wastewater, 40 CFR 435.44 applies to the discharge of treated domestic wastewater, which establishes a prohibition to floating solids, foam and garbage. In the absence of ELGs, the Department developed TBELs using case-by-case BPJ for domestic wastewater citing requirements in 18 AAC 72 as the basis.

The second part of the definition is in error as discussed previously in Section 3.3.2. The correct reference appears to be 18 AAC 72.050, minimum treatment for domestic wastewater. Since the discharge from Outfall 001 consists of domestic wastewater, the minimum treatment standards of 18 AAC 72.050 is applicable and the TBELs established in the Permit reflect these same requirements. Accordingly, the second part of the definition has been met.

The third part of the definition includes any treatment required by state law that is more stringent than 18 AAC 70. Other regulations beyond 18 AAC 70 that may apply to this permitting action include 18 AAC 15, 18 AAC 72 and 18 AAC 83. Neither the regulations in 18 AAC 15 nor other state legal requirements the Department is aware of impose more stringent treatment requirements than 18 AAC 70. As discussed in the previous paragraph, the requirements of 18 AAC 72 have been addressed, and the Permit is consistent with 18 AAC 83. Therefore, the third and final part of the definition has also been met.

7.0 Other Permit Conditions

7.1 Standard Conditions

Appendix A of the Permit contains standard regulatory language that must be included in all APDES permits. These requirements are based on the regulations and cannot be challenged in the context of an individual APDES permit action. The standard regulatory language covers requirements such as monitoring, recording, reporting requirements, compliance responsibilities, and other general requirements.

7.2 Quality Assurance Project Plan

The permittee is required to develop and implement a QAPP that ensures all monitoring data associated with the Permit are accurate and to explain data anomalies if they occur. During data collection to characterize effluent to support the application for reissuance, some analytical methods used did not consistently meet data quality objectives; some sample results did not satisfy the requirement that the method detection limit be less than the applicable water quality criteria for certain parameters. The permittee is required to develop and implement procedures in a QAPP that documents standard operating procedures the permittee must follow for collecting (e.g., EPA Method 1669 or similar industry standard), handling, storing and shipping samples; laboratory analysis (e.g., most sensitive methods); and data reporting. If a QAPP has already been developed and implemented, the permittee must review and revise the existing QAPP to ensure it includes the necessary content. The permittee must submit a letter to the Department within 120 days of the effective date of the Permit certifying that the QAPP has been revised and implemented. The plan shall be retained on site and made available to the Department upon request.

7.3 Best Management Practices Plan

A BMP Plan is a collection of pollution control methods and housekeeping measures which are intended to minimize or prevent the generation and the potential release of pollutants from a facility to the waters of the U.S. through normal operations and ancillary activities. Per CWA Section 402(a)(1), development and implementation of BMPs may be included as a condition in APDES permits. CWA 402(a)(1) authorizes DEC to include miscellaneous requirements that are deemed necessary to carry out the provision of the CWA in permits on a case-by-case basis. The BMP Plan must be developed to control, or abate, the discharge of pollutants in accordance with 18 AAC 83.475. A BMP Plan must include certain generic BMPs as well as specific BMPs for controlling pollutants (see Section 7.3.1).

Within 120 days of the effective date of the Permit, the permittee must be revised and implement. Upon revising the BMP Plan, the permittee must submit written certification that the BMP Plan has been revised and implemented within 120 days of the effective date of the Permit. In subsequent years of the Permit, the permittee must establish a review committee to review and revise the BMP Plan annually to include any modifications deemed to be necessary or appropriate since the previous revision to meet the objectives and specific requirements in the Permit. By January 31st of each year thereafter, the permittee must submit written certification that the BMP Plan review committee has reviewed and modified the BMP Plan, as appropriate. However, submittal of subsequently revised BMP Plans to DEC for administrative records is not required.

7.3.1 Specific BMP Requirements

In addition to the standard BMP components listed in Permit Section 3.2, DEC requires that specific BMPs be included in the BMP Plan to address inactivating the CIP system during contingency discharges through Outfall 002. Because the CIP process operates only a few times per year and a contingency discharge is not likely to occur at the sample time, the Permit does not include the CIP waste stream in the authorization to discharge Outfall 002 and discharge of the CIP waste stream and other unauthorized wastewater sources have specifically been prohibited. Accordingly, the specific BMP must establish operating procedures to ensure an unauthorized discharge of the CIP waste stream does not occur if a contingency discharge at Outfall 002 occurs.

7.4 Characterization Study

In the third year of the Permit, one year prior to the application deadline, the permittee is required to develop and implement a Sampling and Analysis Plan (SAP) to obtain certain characterization information from Outfall 001, Outfall 002, and the receiving water to support future permit development. One objective of the SAP is to obtain accurate information to characterize the RO Reject Wastewater with respect to TSS, turbidity, and iron or other metals potentially creating precipitates that affect effluent clarity. The SAP should consider implementation of field measurements of turbidity with oxidized and unoxidized samples for comparison with laboratory analytical results to formulate a correlation that may be implemented in the next permit. The permittee must conduct adequate sampling events during the Permit term to support characterization of the discharges and submit the results with the next application for reissuance. The list of parameters to be sampled and analyzed include the parameters with effluent limits in Tables 3 and 4. In addition to the parameters with effluent limits, the permittee must collect copper, lead, nickel, and zinc if not already required via the limits in Tables 3 and 4. The permittee is encouraged to coordinate with the Department during development of the SAP to identify other parameters and methods that should be considered.

8.0 Other Legal Requirements

8.1 Endangered Species Act

The ESA requires federal agencies to consult with the National Oceanic and Atmospheric Administration (NOAA), National Marine Fisheries Service (NMFS) and the U.S. Fish and Wildlife Service (USFWS) if their actions could beneficially or adversely affect any threatened or endangered species. As a State agency, DEC is not required to consult with these federal agencies regarding permitting actions. However, the Department voluntarily requested this information from these services on August 21, 2017 to inform permit development and request a listing of endangered species and critical habitat in the vicinity of the discharge. The USFWS directed DEC to use their online resources to research species and habitat. The Department found the following threatened species may occur in the Beaufort Sea off the coast of Alaska in the vicinity of the discharge into Simpson Lagoon: Polar Bear (*Ursus maritimus*), Spectacled Eider (*Somateria fischeri*), Steller's Eider (*Polysticta stelleri*), Bearded Seal (*Erignathus barbatus*), and Ringed Seal (*Phoca hispida*). The Bowhead Whale (*Balaena mysticetus*), an endangered species under the ESA and the Spotted Seal (*Phoca largha*), protected under the MMPA, both have ranges that encompass the facility. No critical habitat has been designated for the Polar Bear, and

although final critical habitat areas have been designated for the Spectacled Eider and Steller's Eider, those areas are outside of the vicinity of SID from Simpson Lagoon to Oliktok Point.

8.2 Essential Fish Habitat

Essential fish habitat (EFH) includes the waters and substrate (sediments, etc.) necessary for fish from commercially-harvested species to spawn, breed, feed, or grow to maturity. The Magnuson-Stevens Fishery Conservation and Management Act (January 21, 1999) requires federal agencies to consult with the National Oceanic and Atmospheric Administration (NOAA) when a proposed discharge has the potential to adversely affect (i.e. reduce quality and/or quantity of) EFH. Although DEC as a state agency is not required to consult with federal agencies regarding permitting activities, the Department voluntarily requested this information from NOAA on August 21, 2017 to inform permit development. The Department also inspected the NOAA National Marine Fisheries Service *EFH Mapper*, a web-based mapping tool for geographic searches. *EFH Mapper* enables users to view habitat maps and species lists for a specific location.

The marine EFHs for anadromous Chinook Salmon (*Oncorhynchus tshawytscha*), Chum Salmon (*Oncorhynchus keta*), Coho Salmon (*Oncorhynchus kisutch*), Pink Salmon (*Oncorhynchus gorbuscha*), and Sockeye Salmon (*Oncorhynchus nerka*) were found in the vicinity of the discharge. The EFH for the only groundfish specie found in the vicinity, Arctic Cod (*Boreogadus saida*), were also found in the vicinity of the discharge.

8.3 Ocean Discharge Criteria Evaluation

CWA Section 403(a), Ocean Discharge Criteria, prohibits the issuance of a permit under CWA Section 402 for a discharge into the territorial sea, the water of the contiguous zone, or the oceans except in compliance with Section 403. Permits for discharges seaward of the baseline on the territorial seas must comply with the requirements of Section 403, which include development of an Ocean Discharge Criteria Evaluation (ODCE).

The Permit requires compliance with Alaska WQS. Consistent with 40 CFR 125.122(b), adopted by reference at 18 AAC 83.010(C)(8), discharges in compliance with Alaska WQS shall be presumed not to cause unreasonable degradation of the marine environment. EPA made the connection between the similar protections provided by ODCE requirements and WQS when promulgating ocean discharge criteria rules in 1980, as stated, "the similarity between the objectives and requirements of [state WQS] and those of CWA Section 403 warrants a presumption that discharges in compliance with these [standards] also satisfy CWA Section 403." (Ocean Discharge Criteria, 45 Federal Register 65943.). As such, given the Permit requires compliance with Alaska WQS, unreasonable degradation to the marine environment is not expected and further analysis under 40 CFR 125.122 is not warranted for this permitting action.

8.4 Permit Expiration

The permit will expire five years from the effective date of the Permit.

9.0 References

1. Alaska Department of Environmental Conservation, 2003a. *Alaska Water Quality Criteria Manual for Toxics and Other Deleterious Organic and Inorganic Substances*. As amended through December 12, 2008.
2. Alaska Department of Environmental Conservation, 2003b. *18 AAC 70 Alaska Water Quality Standards.* As amended through June 26, 2003.
3. Alaska Department of Environmental Conservation, 2010a. *Interim Antidegradation Implementation Methods*. Division of Water, Policy and Procedure No. 05.03.103. July 14, 2010.
4. Alaska Department of Environmental Conservation, 2010b. *Alaska's Final 2010 Integrated Water Quality Monitoring and Assessment Report*. July 15, 2010.

   Alaska Department of Environmental Conservation, 2010c. 18 AAC 15 Administrative Procedures. As amended through August 15, 2010.
5. Alaska Department of Environmental Conservation, 2014. *18 AAC 70 Alaska Pollutant Discharge Elimination System Program (APDES) Permits Reasonable Potential Analysis and Effluent Limits Development Guide.* June 30, 2014.
6. Alaska Department of Environmental Conservation, 2016. *18 AAC 72 Wastewater Disposal.* As amended through October 22, 2016.
7. Alaska Department of Environmental Conservation, 2016. *18 AAC 83 Alaska Pollutant Discharge Elimination System Program*. As amended through October 22, 2016.
8. Alaska Oil and Gas Association, 2017. *The Role of the Oil and Gas Industry in Alaska's Economy*, Prepared by the McDowell Group for the Alaska Oil and Gas Association, May 2017.
9. National Oceanic and Atmospheric Administration, 2018. *EFH Mapper.* Accessed February 21, 2018. < https://www.habitat.noaa.gov/protection/efh/efhmapper/>
10. National Oceanic and Atmospheric Administration, 2018. *Species Distribution Mapper.* Accessed February 21, 2018. <https://alaskafisheries.noaa.gov/portal/apps/webappviewer/index.html?id=0c4a81f75310491d9010c17b6c081c81>
11. SLR International Corporation, 2017. *Spy Island Drillsite Mixing Zone Study Report*, Prepared for Eni, US Operating Company, Incorporated. December 2017.
12. United States Environmental Protection Agency, 1991. *Technical Support Document for Water Quality-Based Toxics Control*, Office of Water Enforcement and Permits and Office of Water Regulations and Standards, EPA 505-2-90-001. March 1991.
13. United States Environmental Protection Agency, 2010. *NPDES Permit Writers' Manual*, Office of Wastewater Management, Water Permits Division, EPA 833-K-001. September 2010.

APPENDIX A. Figures

Figure A-1: Location of Spy Island Drillsite

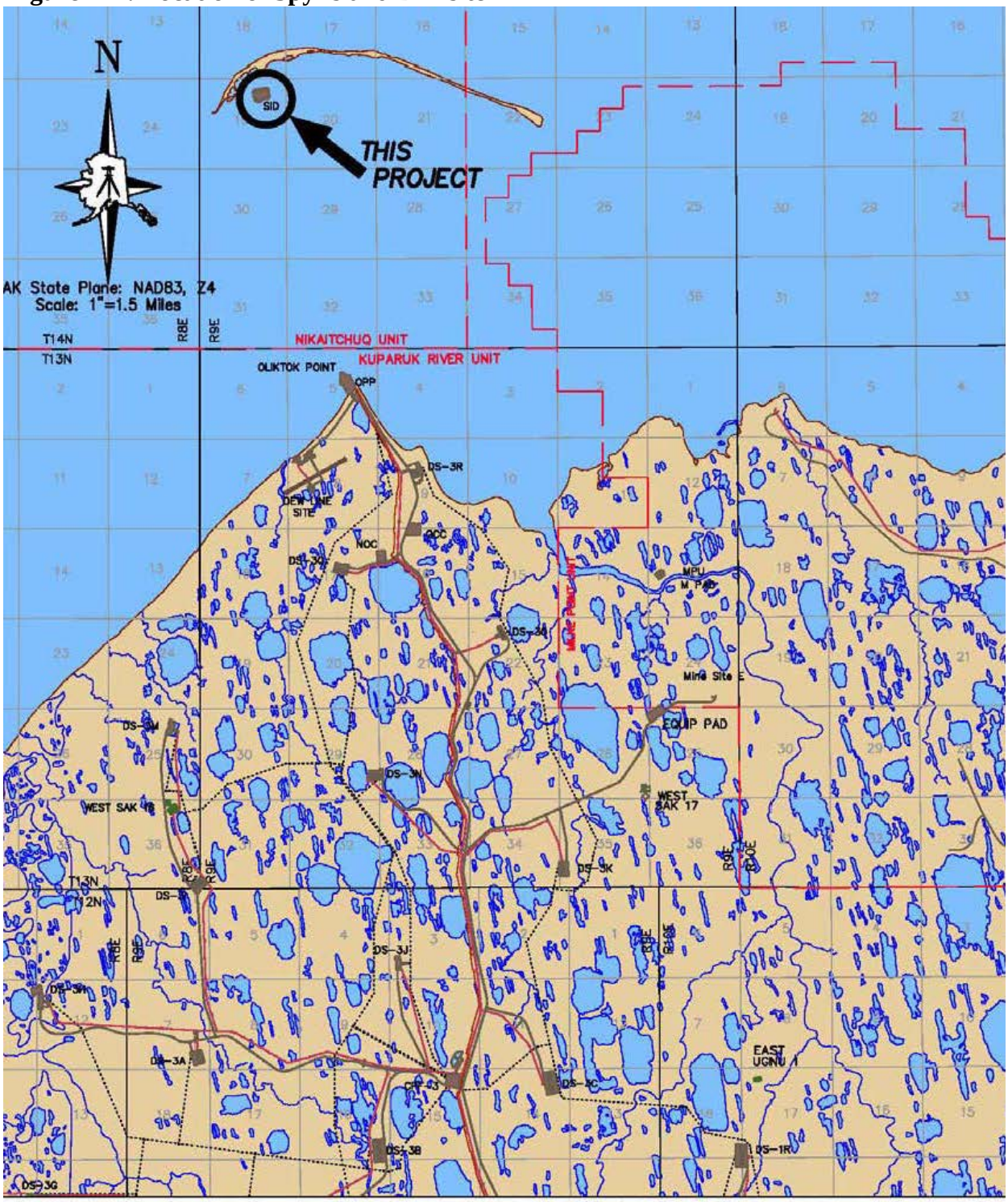

This Project is located within Protracted Sections 19 of T14N, R9E: Umiat Meridian.

INTENTIONALLY

BLANK PAGE

Figure A-2: Site Plan of Spy Island Drillsite

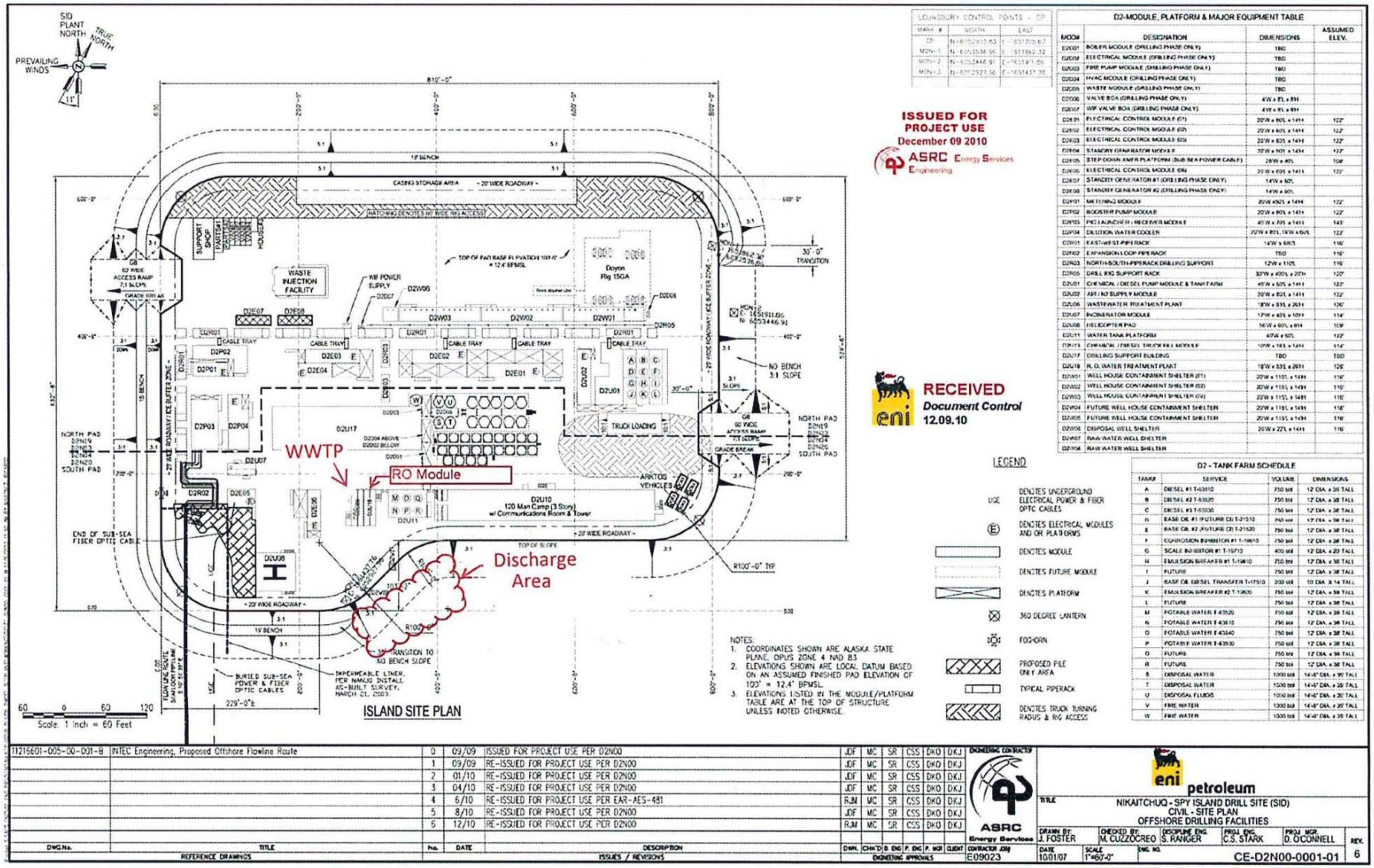

Figure A-3: Water Flow Diagram for Spy Island Drillsite

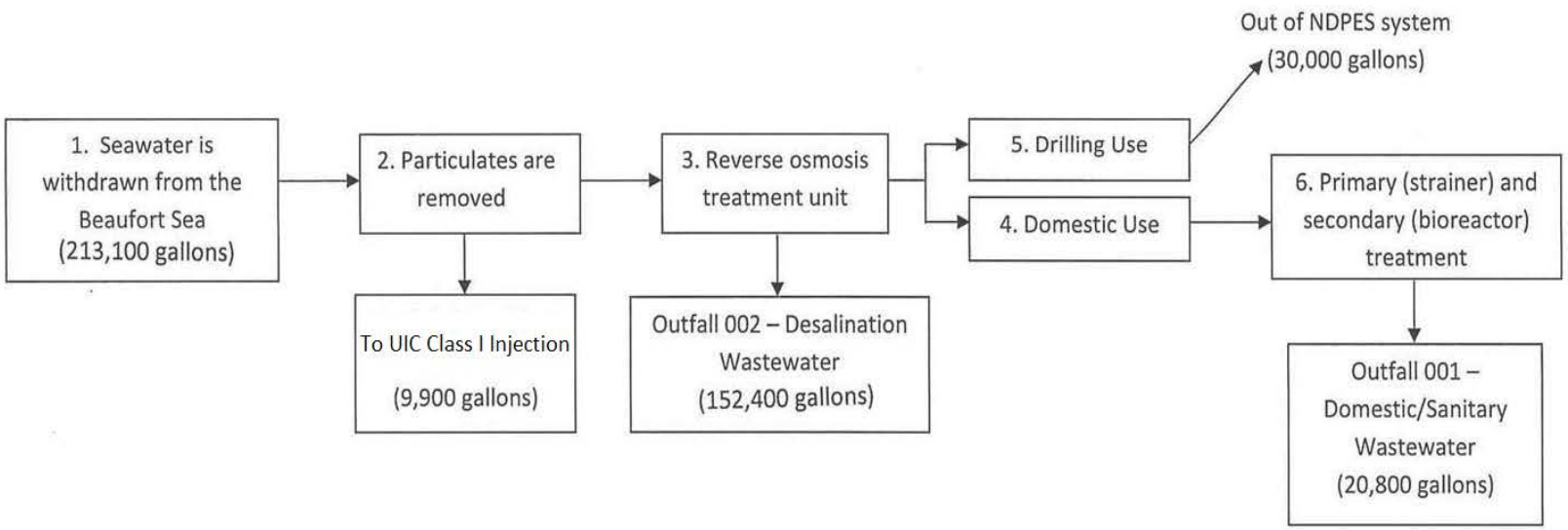

Figure A-4: Desalination Process Flow Diagram for Spy Island Drillsite

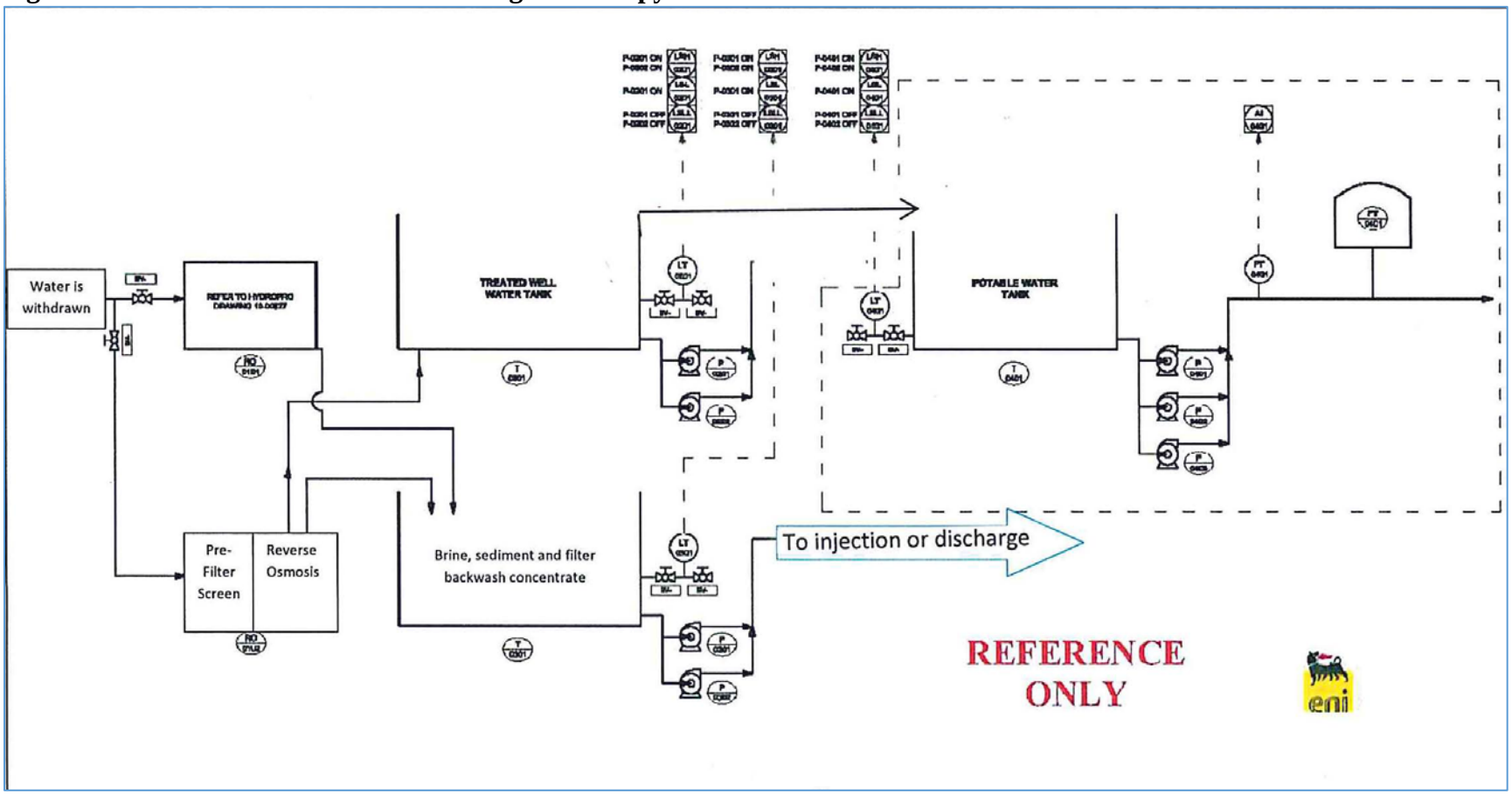

Figure A-5: Wastewater Process Flow Diagram for Spy Island Drillsite

PLACEHOLDER FOR HYDROPRO FIGURE 10-00527

Figure A-6: Wastewater Process Flow Diagram for Spy Island Drillsite

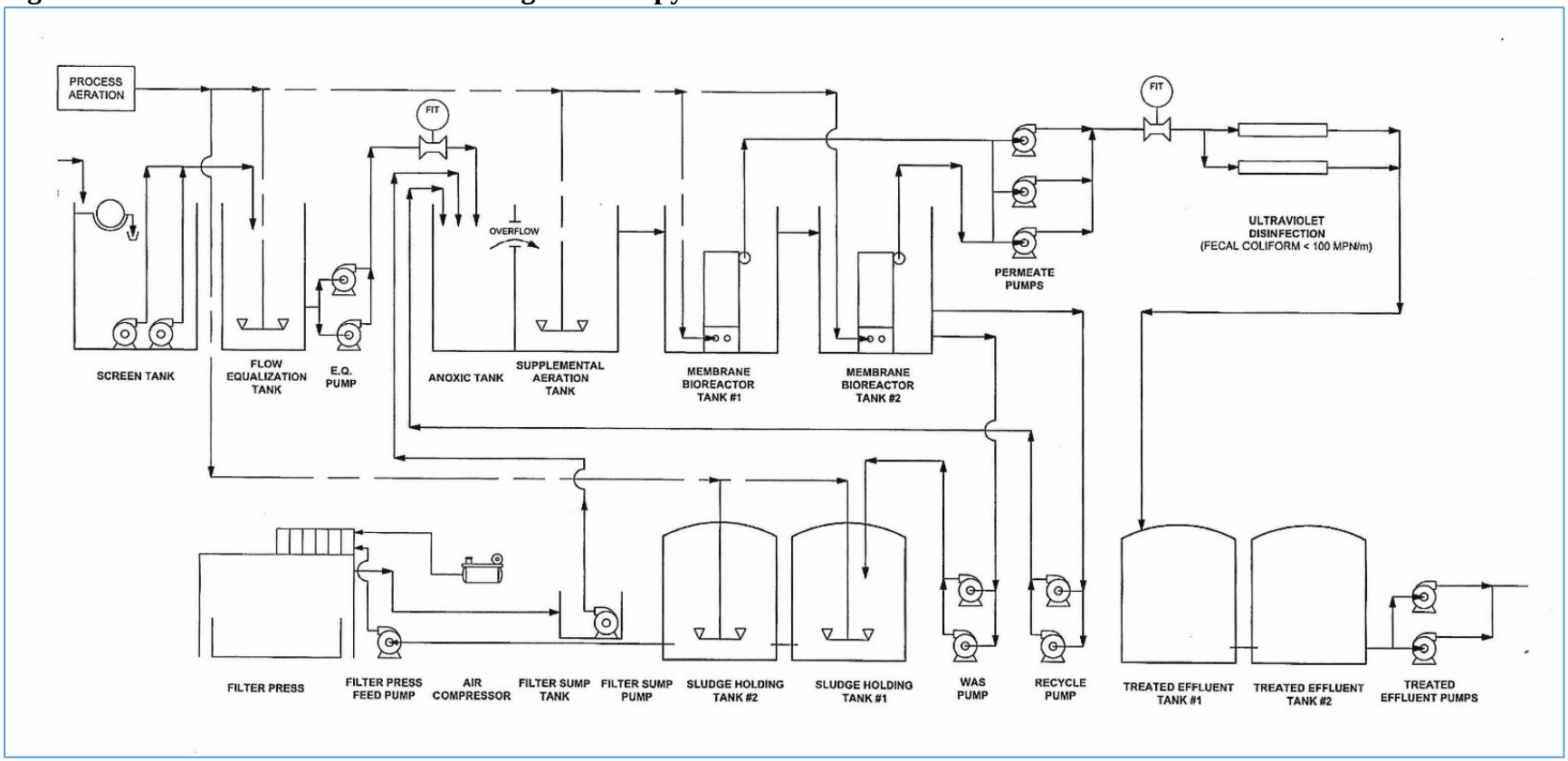

INTENTIONALLY

BLANK PAGE

APPENDIX B. Reasonable Potential Analysis

This Appendix summarizes the reasonable potential analysis (RPA) process to determine and develop effluent limits for Individual Permit AK0053767 ─ Eni US Operating Company Spy Island Drillsite (Permit). The Alaska Department of Environmental Conservation (Department or DEC) determined that the permitted discharges have reasonable potential to cause or contribute to a violation of Alaska Water Quality Standards for certain parameters in accordance with the *Technical Support Document for Water Quality-Based Toxics Control* (USEPA, 1991), hereinafter the *TSD*, and the *Alaska Pollutant Discharge Elimination System Program Permits Reasonable Potential Analysis and Effluent Limits Development Guide*, hereinafter the *RPA/EL Guide*.

The Department evaluates reasonable potential for a discharge of effluent containing a parameter of concern (POC) by comparing the projected receiving water concentration at the boundary of the authorized acute or chronic mixing zones to the water quality criteria applicable for that POC. Reasonable potential exists if the projected receiving waterbody concentration for that POC at the boundary of the mixing zone exceeds, or contributes to an exceedance of, the applicable criteria for the POC. If reasonable potential exists, a water quality-based effluent limit (WQBEL) must be included in the permit per 18 AAC 83.435. The following sections describe how the RPA was determined for the permitted discharges to marine waters and summarizes the calculations.

B.1 Mass Balance

Normally for a discharge of a parameter at the maximum expected effluent concentration (MEC) into a marine environment with a known ambient waterbody concentration (AWC), the projected receiving waterbody concentration (RWC) is determined using a steady state model represented by the following mass balance equation:

$$(V_{MEC} + V_{AWC})RWC = V_{MEC} * MEC + V_{AWC} * AWC \qquad \textbf{(Equation B-1)}$$

Where:

RWC = Receiving waterbody concentration downstream of the effluent discharge;

MEC = Maximum expected effluent concentration;

AWC = Ambient waterbody concentration, taken as the 85th percentile of data or 15 percent of the chronic criteria if no ambient data is available;

V_{MEC} = Volume of the effluent discharged into the control volume;

V_{AWC} = Volume of the ambient receiving water in the control volume.

By definition of the dilution factor (DF):

$$DF_{acheived} = \frac{V_{MEC} + V_{AWC}}{V_{MEC}} \qquad \textbf{(Equation B-2)}$$

Upon separating variables in Equation B-1 and substituting Equation B-2 yields:

$$\mathrm{DF}_{\mathrm{acheived}} = \frac{(\mathrm{MEC} - \mathrm{AWC})}{(\mathrm{RWC} - \mathrm{AWC})} \qquad \textbf{(Equation B-3a)}$$

Equation B-2 provides the dilution factor achieved at the boundary of the mixing zone based on the relative volumes, or flows, in the receiving water. Equation B3a provides the dilution achieved based on the concentrations of MEC, AWC, and the RWC if it were precisely known at the physical location of the mixing zone (i.e., based on the volumes and representative dimensions of the physical mixing zone). Because the mixing zone is "required" to meet water quality criteria at the boundary, the water quality criteria (WQC) is substituted for RWC in Equation B-3a to obtain a "required" dilution factor ($DF_{required}$). Once the Department has authorized a mixing zone and assigned an appropriate dilution factor, the authorized dilution factor ($DF_{authorized}$) is used in equations relating concentrations in the RPA and WQBEL development. See Equations B-4a and B-4b) and WQBEL derivations in Appendix C. Per Fact Sheet Section 3.3.1, DEC authorizes a chronic mixing zone for Outfall 001 with a dilution factor of 23.5 and an acute mixing zone with a dilution factor of 9.0. For Outfall 002, DEC authorizes a chronic mixing zone with a dilution factor of 83. There is no acute mixing zone authorized for Outfall 002.

When the POC is temperature, the variables are identified with a "T" for temperature in lieu of "C" for concentration, thus yielding the variables MET, AWT, and RWT. However, Equation B-3a is not directly applicable in the same manner because the marine water quality criteria for temperature is in reference to the instantaneous ambient receiving water temperature (AWT); the increase above ambient cannot be more than 1 °C (i.e., WQC = AWT +1). By making substitutions and using the descriptor "ΔT" for temperature difference, Equation B-3a can be rewritten to:

$$\mathrm{DF}_{\mathrm{required}} = \frac{(\mathrm{ME}\Delta\mathrm{T})}{((\mathrm{AWT} + 1) - \mathrm{AWT})}$$

Where: $\mathrm{ME}\Delta\mathrm{T} = \mathrm{MET} - \mathrm{AWT}$

Simplifying,

$$\mathrm{DF}_{\mathrm{required}} = \mathrm{ME}\Delta\mathrm{T} \qquad \textbf{(Equation B-3b)}$$

To determine the water quality criteria at the boundary based on an authorized dilution factor (authorized dilution factors are typically less than that required), Equations B-3a is rearranging to solve for RWC:

$$\mathrm{RWC} = \frac{(\mathrm{MEC} - \mathrm{AWC})}{\mathrm{DF}_{\mathrm{authorized}}} + \mathrm{AWC} \qquad \textbf{(Equation B-4a)}$$

In the case of temperature after substituting, Equation B-4a simplifies to the following equation:

$$\mathrm{RW}\Delta\mathrm{T} = \frac{\mathrm{ME}\Delta\mathrm{T}}{\mathrm{DF}_{\mathrm{authorized}}} \qquad \textbf{(Equation B-4b)}$$

B.1.1 Maximum Expected Effluent Concentration or Temperature

For a POC, to calculate the MEC or MEΔT, the Department follows the *RPA/EL Guide* that uses modified statistical procedures from Section 3.3 of the *TSD*. Specifically, the Department uses a 95% confidence level with the 99th percentile value of the POC to determine a reasonable potential multiplier (RPM). The RPM is therefore defined as the ratio of the upper bound value of the distribution at the 99th percentile to maximum observed value. The percentile of the maximum observed value (MOC or MOΔT) is estimated at the 95% confidence level. The RPM is calculated differently depending on the type of distribution, coefficient of variation (CV) of the data, and the number of data points.

In most cases, the Department evaluates the distribution of the data set using the Environmental Protection Agency's ProUCL Statistical Software Program, Version 5.1 (ProUCL). The possible statistical distributions include lognormal, normal, and gamma. However, when the number of effluent data points are less than 10, the Department assumes a lognormal distribution and CV = 0.6, a conservative estimate that results a relatively high variability per the *RPA/EL Guide*.

The CV is defined as the ratio of the sample standard deviation of the data set to the sample mean.

$$\mathrm{CV} = \text{coefficient of variation} = \frac{\text{standard deviation}}{\text{mean}},$$

For data sets with a normal or gamma distribution of values (x), or data sets analyzed with nonparametric methods:

$$\mathrm{CV} = \frac{\hat{\sigma}}{\hat{\mu}} \qquad \textbf{(Equation B-5)}$$

Where:

$$\hat{\mu} = \text{estimated mean} = \frac{\sum[x_i]}{k}, \quad 1 \le i \le k$$

$$\hat{\sigma}^2 = \text{estimated variance} = \sum \frac{[(x_i - \mu)^2]}{k-1}, \quad 1 \le i \le k$$

$$\hat{\sigma} = \text{estimated standard deviation} = (\hat{\sigma}^2)^{0.5}$$

$$k = \text{number of samples}$$

For data sets with a lognormal distribution, as is assumed in this case, or for data sets analyzed with the semi-parametric regression on order statistics (ROS) method:

$$\mathrm{CV} = [\exp(\hat{\sigma}_y^2) - 1]^{0.5} \qquad \textbf{(Equation B-6)}$$

Where: $y_i = \ln(x_i)$ for $i = 1,2,\ldots,k$

$$\hat{\sigma}_y^2 = \text{variance} = \sum[(y_i - \hat{\mu}_y)^2]/(k-1)$$

$$\hat{\mu}_y = \text{mean} = (\sum y_i)/k$$

$$k = \text{number of samples}$$

The general equation for the RPM (Equation B-7), followed by equations (B-8 and B-9) specifically for data with a lognormal or Log(ROS) distribution is:

$$\mathrm{RPM} = \frac{C_{99}}{C_{Pn}}$$ **(Equation B-7)**

$$C_{99} = \exp[(Z_{99} * \hat{\sigma}_y) - (0.5 * \hat{\sigma}_y^2)]$$ **(Equation B-8)**

$$C_{Pn} = \exp[(Z_{Pn} * \hat{\sigma}_y) - (0.5 * \hat{\sigma}_y^2)]$$ **(Equation B-9)**

In the case of data displaying normal, gamma, or no discernable distribution, equations for C_{99} and C_{Pn} become:

$$C_{99} = \hat{\mu}_n + Z_{99} * \hat{\sigma}$$ **(Equation B-10)**

$$C_{Pn} = \hat{\mu}_n + Z_{Pn} * \hat{\sigma}$$ **(Equation B-11)**

In Equations B-7 and B-9, the percentile represented by the MOC is:

$$p_n = (1 - \text{confidence level})^{1/n}$$ **(Equation B-12)**

Where: p_n = the percentile represented by the MOC (or MOΔT)

n = the number of samples

Confidence Level = 0.95 for this analysis

In the event that a calculated RPM is less than one (1), the value defaults to a value of one (1) per the *RPA/EL Guide*. The MEC and MEΔT are respectively determined by multiplying the MOC and MOΔT by the RPM:

$$\mathrm{MEC} = (\mathrm{RPM}) * (\mathrm{MOC})$$ (Equation B-13a)

$$\mathrm{ME\Delta T} = (\mathrm{RPM}) * (\mathrm{MO\Delta T})$$ **(Equation B-13b)**

If the RWC (acute or chronic) calculated by Equation B-4a or the RWT calculated by Equation B-4b is found to exceed the respective criteria for the POC, then reasonable potential exists for the parameter and a WQBEL must be developed for that parameter.

B.2 Reasonable Potential Analysis for Outfall 001

For Outfall 001 – Domestic Wastewater, the mixing zone analysis identified total copper as the parameter driving the size of the acute mixing zone and temperature as the driving parameter for the chronic mixing zone size. The Department authorizes an acute mixing zone with a $DF_{a,\ authorized}$ of 9.0 and a chronic mixing zone with a $DF_{c,\ authorized}$ of 23.5.

B.2.1.1 Copper in the Acute Mixing Zone

In this RPA, total copper concentrations have been derived from dissolved copper results from effluent characterization samples by applying the applicable metals translator (factor 0.83) to convert to total. The following calculations demonstrate that the total copper concentration in the effluent from Outfall

001 has reasonable potential to exceed, or contribute to an exceedance, at the boundary of the acute mixing zone around Outfall 001.

Given: $n = 6$

Because the number of available effluent data is less than 10, per the RPA/EL Guide, the data distribution is assumed to be lognormal, with:

$$CV = 0.6$$

Substituting CV and solving Equation B-6: $\hat{\sigma}_y^2 = 0.307$

$$\hat{\sigma} = 0.555$$

Per the *RPA/EL Guide*: confidence level = 0.95

By substitution of the confidence level and n into Equation B-12 and solving for the percentile represented by the MOC:

$$P_n = 0.607$$

Using the definition of RPM given in Equation B-7 and per the RPA/EL Guide for a lognormal distribution, substitute the concentration terms (C) respectively with Equations B-8 and B-9:

$$RPM = \frac{\exp\left(z_{99}\ \hat{\sigma}_y - 0.5\,\hat{\sigma}_y^2\right)}{\exp\left(Z_{Pn}\ \hat{\sigma}_y - 0.5\,\hat{\sigma}_y^2\right)}$$

With Z-scores calculated for the percentiles as:

$$Z_{99} = 2.326 \text{ and}$$

$$Z_{Pn} = Z_{60.7} = 0.271$$

$$RPM = 3.13$$

Using Equation B-13a and the maximum observed concentration of total copper converted from dissolved:

$$MOC = 15.66\ \mu g/L$$

The MEC is calculated:

$$MEC = 48.94\ \mu g/L$$

To determine the dilution factor required to meet the acute water quality criterion for total copper at the acute mixing zone boundary, use Equation B-4a:

$$RWC = \frac{MEC - AWC}{DF_{authorized}} + AWC$$

Since insufficient ambient data is available for determining the 85th percentile of the ambient total copper concentrations, the ambient waterbody concentration taken as 15 percent of the chronic criteria,:

$$AWC = (0.15)(3.73) = 0.560$$

Using the acute DF: $DF_{a,\ authorized} = 9.0$

$$RWC = 5.9\ \mu g/L$$

Because the RWC calculated for total copper at the boundary of the acute mixing zone is greater than the acute criterion of 5.78 µg/L, there is reasonable potential for the parameter to cause, or contribute to, an exceedance of the water quality criterion and a WQBEL is developed for total copper in Appendix C.

B.2.1.2 Temperature Difference in the Chronic Mixing Zone

MET is 23.3 and AWT is taken as the approximate 15th percentile of the receiving water temperature measurements in the Beaufort, -0.7. Per Equation B-3b, the dilution factor required is 24. Using the temperature-based Equations 3b, 4b, 13b in lieu of the concentration-based Equations 3a, 4a, and 13a, a similar reasonable potential analysis can be performed for temperature using similar assumptions. However, as demonstrated below, applying an RPM as defined by Equation 7 to MEΔT is not realistic given the temperature of the domestic wastewater is derived from incidental heat in the facility. The following calculations demonstrate the impracticality of applying an RPM to the MOΔT:

$$n = 6, \text{ so } CV = 0.6$$

$$\hat{\sigma}_y^2 = 0.307$$

$$\hat{\sigma} = 0.555$$

$$\text{confidence level} = 0.95$$

$$P_n = 0.607$$

$$Z_{99} = 2.326 \text{ and}$$

$$Z_{Pn} = Z_{60.7} = 0.271$$

$$RPM = 3.13$$

$$MO\Delta T = 24.0\ °C$$

$$ME\Delta T = 75.1\ °C$$

The MOΔT, based on incidental transfer of heat from the facility, is 24 °C (75 °F). If an RPM of 3.13 is applied, the MEΔT is 75 °C (167 °F), which appears unrealistic that the wastewater could become that warm from incidental heat from the facility. In order to account for real physical constraints on heat input into the domestic wastewater, the Department is applying a default RPM of one (1). Therefore, the resulting MEΔT = MOΔT = 24 °C as summarized below.

$$RPM = 1$$

$$MO\Delta T = ME\Delta T = 24.0\ °C$$

According to Equation B-4b: $$RW\Delta T = \frac{ME\Delta T}{DF_{c,authorized}}$$

For the authorized chronic mixing zone dilution factor of 23.5:

$$RW\Delta T = 1.02\ °C$$

Because the RWΔT is greater than the allowable difference of 1 based on the water quality criteria for temperature, there is a reasonable potential for the discharge to exceed, or contribute to an exceedance, of the temperature water quality. Accordingly, a temperature WQBEL is developed in Appendix C for Outfall 001.

B.3 Reasonable Potential Analysis for Outfall 002

B.3.1.1 Salinity in the Chronic Mixing Zone

For Outfall 002 – RO Reject Wastewater, the mixing zone analysis identified salinity as the parameter governing the size of the chronic mixing zone. There is no applicable acute criteria for salinity. The ambient salinity is take to be 21 parts per thousand (ppt) based on a sample taken in the receiving water during broken ice conditions. Based on an ambient salinity of 21 ppt, the chronic water criteria is no greater than an increase in ambient of 4 ppt. Hence, the WQC is 25 ppt. The MOC of salinity is 93.8 ppt. The Department authorizes a chronic mixing zone for Outfall 002 with a DF of 83. An RPA, similar to that performed previously is shown for salinity below:

$$n = 4, \text{ so } CV = 0.6$$

$$\hat{\sigma}_y^2 = 0.307$$

$$\hat{\sigma} = 0.555$$

$$\text{confidence level} = 0.95$$

$$P_n = 0.47$$

$$Z_{99} = 2.326 \text{ and}$$

$$Z_{Pn} = Z_{0.47} = -0.068 \text{ (negative)}$$

$$RPM = 3.77$$

$$MOC = 93.8 \text{ ppt}$$

$$MEC = 353.8 \text{ ppt}$$

To determine the dilution factor required to meet the water quality criterion for salinity at the mixing zone boundary, use Equation B-4a:

$$RWC = \frac{MEC - AWC}{DF_{c,authorized}} + AWC$$

$$AWC = 21 \text{ ppt}$$

Using the chronic DF: $DF_{c,\ authorized} = 83$

$$RWC = 25.3 \text{ ppt}$$

Because the RWC calculated for the salinity at the boundary of the chronic mixing zone for Outfall 002 is greater than the criterion of 4 ppt above the ambient water salinity (25 ppt), there is reasonable potential for the salinity of the effluent from Outfall 002 to cause, or contribute to, an exceedance of the water quality criterion. Therefore a WQBEL for salinity in Outfall 002 has been developed in Appendix C.

APPENDIX C. Basis for Effluent Limits

The Alaska Department of Environmental Conservation (Department or DEC) prohibits the discharge of pollutants to waters of the United States (U.S.) per Alaska Administrative Code (AAC 18 AAC 83.015) without first obtaining a permit issued by the Alaska Pollutant Discharge Elimination System (APDES) Program that meets the purposes of Alaska Statutes (AS) 46.03 and is in accordance with Clean Water Act (CWA) Section 402. Per these statutory and regulatory requirements, Individual Permit AK0053767 – Eni US Operating Co. Inc., Spy Island Drillsite (Permit) includes effluent limitations that require the discharger to (1) meet standards reflecting levels of technological capability, (2) comply with 18 AAC 70 – Alaska Water Quality Standards (WQS), (3) and comply with other state requirements that may be more stringent.

The CWA requires that the limits for a particular parameter be the more stringent of either technology-based effluent limits (TBELs) or water quality-based effluent limits (WQBEL). TBELs are set via rule makings by the Environmental Protection Agency (EPA) in the form of Effluent Limitation Guidelines (ELGs) that correspond to the level of treatment that is achievable using available technology. In situations where ELGs have not been developed or have not considered specific discharges or pollutants, a regulatory agency can develop TBELs using best professional judgment (BPJ) on a case-by-case basis. A WQBEL is designed to ensure that WQS per 18 AAC 70 are maintained and the waterbody as a whole is protected. WQBELs may be more stringent than TBELs. In cases where both TBELs and WQBELs have been generated, the more stringent of the two limits will be selected as the final permit limit.

C.1 Technology-Based Effluent Limits

ELGs are developed by the EPA on an industry-by-industry basis and are intended to represent the greatest pollutant reductions that are economically achievable for a given industry. Per 18 AAC 83.430(a)(1), an APDES permit must include conditions meeting the requirements of applicable TBELs if they have been developed for the type of discharge authorized by the permit.

C.1.1.1 TBELs Based On ELGs

EPA has established national ELGs for coastal facilities in the oil and gas extraction point source category in 40 CFR 435 Subpart D, adopted by reference in 18 AAC 83.010(g)(3). Although the ELGs did not address reverse osmosis (RO) reject wastewater (Outfall 002), the ELGs do include TBELs for Outfall 001 - Domestic Wastewater ("Sanitary Waste" per ELGs). Accordingly, the Department is applying those ELGs that are applicable to Outfall 001 – Domestic Wastewater. Specifically, the Permit requires no discharge of free oil, floating solids or foams or garbage. These TBELs were also included in the existing Permit and are being retained in the reissued Permit.

C.1.1.2 TBELs Using Case-by-Case Best Professional Judgement

Outfall 001 – Domestic Wastewater: There are no ELGs for privately-owned domestic wastewater treatment facilities. Therefore, the Department is developing TBELs using case-by-case BPJ for Outfall 001 – Domestic Wastewater for pH measured in standard units (SU) and five-day biochemical oxygen demand (BOD_5) and total suspended solids (TSS) both measured in milligrams per liter (mg/L). The basis for these TBELs is 18 AAC 72 – Domestic Wastewater Disposal that requires meeting an effluent standard of secondary treatment as defined by 18 AAC 72.990(59). These standards also require pH to be between 6.0 and 9.0 SU. For both

BOD_5 and TSS, the maximum daily limit (MDL) is 60 mg/L and the average monthly limit (AML) is 30 mg/L. Although included in the definition of secondary treatment, the Department is not applying the average weekly limit of 45 mg/L in the definition because the MDL and AML are sufficient to control these pollutants in the discharge.

Outfall 002 – RO Reject Wastewater: The existing permit for the facility issued in 2013 (2013 Permit), TBELs for TSS were developed using case-by-case BPJ and resulted in an MDL of 60 mg/L and AML of 30 mg/L. While these TSS TBELs are commonly applied to drinking water backwash systems, the applicability is dependent upon the raw feed water being treated by the RO water treatment plant because the reject wastewater is a more concentrated version of the feed water. These TBELs were applied in 2013 Permit without actual characterization of the effluent and understanding of the feed water into the RO water treatment plant. Per Fact Sheet Section 2.2, the feed water is from brackish groundwater that is believed to have elevated iron concentrations, in reduced form, that creates iron precipitates upon oxidation. This factor makes the previous TBELs established using case-by-case BPJ unattainable. Furthermore, if this information were available at the time of issuing the 2013 Permit, these TSS limits would not have been imposed. Hence, the typical TBELs are not applicable given new information and the lack of understanding of the characteristics of the feed water led to making a technical mistake during development of these previous TBELs. Therefore, DEC is eliminating TBELs for TSS in the permit reissuance. However, the Permit will require a characterization study that evaluates TSS to support potential future permit decisions.

C.2 Water Quality Based Effluent Limits

C.2.1.1 Statutory and Regulatory Basis

Per 18 AAC 70.010, a person may not conduct an operation that causes, or contributes to, a violation of the WQS. Per 18 AAC 83.435(a), an APDES permit must include conditions (e.g., WQBELs) in addition to, or more stringent than established TBELs. Pertinent water quality parameters of concern (POCs) are those that the Department considers as having the potential to exceed water quality criteria at the point of discharge or, if authorized, at the boundary of the mixing zone. When evaluating the effluent to determine if WQBELs derived from water quality criteria are needed, the Department identifies the potential POCs in the characterization process and if the Department has approved a mixing zone, the Department projects the receiving water body concentration for each POC at the boundary of the mixing zone. The procedure is called a reasonable potential analysis (RPA). Per 18 AAC 435(c), DEC must also use procedures that account for effluent variability (e.g., maximum expected effluent concentrations [MEC] and coefficient of variation [CV]) and existing controls on point sources (e.g., treatment systems) and nonpoint sources of pollution (e.g., ambient receiving water conditions). The Department developed and implemented a *Reasonable Potential Analysis and Effluent Limits Development Guide* (Alaska 2014), hereinafter *RPA/EL Guide*, to meet these requirements. The Department used the *RPA/EL Guide* and associated spreadsheet tool to develop the WQBELs in the Permit.

C.2.1.2 Reasonable Potential Analysis

The RPA procedures use statistical methods to estimate MECs or, in the case of temperature in the Permit, maximum expected temperature difference (MEΔT) between the effluent and the ambient receiving water. Using a mass balance approach, the Department conducts the RPA to project the concentration, or temperature, at the point of discharge or at the boundary of a mixing zone, if the Department authorizes one. Because DEC has authorized acute and chronic mixing zones in this Permit, the Department used the mass balance procedure to evaluate if the effluent

exceeds, or contributes to an exceedance, of water quality criteria at the boundaries of either the acute or the chronic mixing zones. Based on the RPA for Outfall 001 – Domestic Wastewater, the Department determined that copper has a reasonable potential to exceed, or contribute to an exceedance, of the acute copper criterion at the boundary of the acute mixing zone and the temperature has reasonable potential to exceed, or contribute to an exceedance, of the temperature criterion at the boundary of the chronic mixing zone. For Outfall 002 -RO Reject Wastewater, salinity was determined to have reasonable potential to exceed, or contribute to an exceedance, of the chronic marine criterion for salinity at the boundary of the chronic mixing zone. Accordingly, per 18 AAC 83.435, the Department has established WQBELs for copper and temperature (ΔT) for Outfall 001 and for salinity for Outfall 002 to ensure compliance with WQS at the boundaries of the authorized mixing zones. No other parameters were determined to have reasonable potential at the boundaries of the authorized mixing zones.

C.2.1.3 Wasteload Allocations

In the context of this section, a WLA is the concentration of a pollutant that can be discharged to the receiving water and comply with the acute or chronic water quality criteria (WQC_a or WQC_c, respectively), accounting for ambient concentrations and authorized acute or chronic dilution factors (DF_a or DF_c, respectively) in the mixing zones, when applicable. The WLA is calculated by rearranging mass balance Equation B-3a in Appendix B and substituting WQC for receiving water concentration and WLA for the maximum expected concentration.

Solving for WLA, the resulting mass balance equation is:

$$WLA_{a,c} = AWC + DF_{a,c\text{ - authorized}}\,(WQC_{a,c} - AWC)$$

Per the derivation of Equation B-3b in Appendix B, ΔT is the limited parameter and internally accounts for ambient temperatures of the receiving water. This requires the chronic WQC for ΔT to be 1 °C and the WLA equation for temperature simplifies to:

$$WLA_{\Delta T} = DF_{c\text{ - authorized}} \times WQC_{\Delta T}$$

In the single ambient sample collected in support of the application for reissuance, no detectable concentration of copper was reported. In situations where no ambient data has been collected, the *RPA/EL Guide* recommends using 15 percent (%) of the chronic water quality criteria as the ambient receiving water concentration. Based on total copper criteria of 3.73, the AWC_{copper} is 0.56 µg/L. Ambient water temperature (AWT) was based on the 15th percentile of measurements from the nearest NOAA station in Prudhoe Bay (- 0.7 °C), while ambient salinity was based on receiving water data collected during broken ice conditions, 21 parts per thousand (ppt). Given that a discharge would only occur during broken ice, both estimates of receiving water characteristics are appropriate.

At Outfall 001:

$DF_{a,\text{ authorized}} = 9.0$ $\qquad$ $DF_{c,\text{ authorized}} = 23.5$

$AWC_{copper} \cong 0.56\ \mu g/L$

$WQC_{a,\text{ copper}} = 5.78\ \mu g/L$ $\qquad$ $WQC_{\Delta T} = 1\ °C$

Therefore,

$WLA_{a,\text{ copper}} = 47.5$ $\qquad$ $WLA_{c,\text{ copper}} = 75.1$

$WLA_{c,\Delta T} = 23.5\ ^{\circ}C$

At Outfall 002:

$DF_{c,\ authorized}$ = 83

$AWC_{salinity} = 21.0$ ppt

$WQC_{c,\ salinity}$ = 25.0 ppt

Therefore,

$WLA_{c,\ salinity}$ = 353 ppt

C.2.1.4 WQBEL Development

Through the RPA (Appendix B), the Department determined that copper and ΔT have reasonable potential to exceed, or contribute to an exceedance, at the acute and chronic mixing zone boundaries, respectively for Outfall 001. For Outfall 002, salinity was determined to have reasonable potential to exceed, or contribute to an exceedance, at the boundary of the chronic mixing zone. To develop WQBELs for copper and temperature (ΔT) for Outfall 001 and salinity for Outfall 002, the Department used the *RPA/EL Guide* and associated spreadsheet tool to develop the WQBELs in the Permit as described in subsequent sections.

C.2.1.5 Outfall 001 WQBEL for Copper

The MDL and AML for copper are based on MEC equaling 15.66 µg/L, a default CV of 0.6, and an assumed four samples per month. The resulting MDL is 48 µg/L and the AML is 24 µg/L. The following steps were conducted for calculation of these WQBELs per the *RPA/EL Guide.*

- **Determine LTAs**: the LTAs are calculated as follows:

$$LTA_a = WLA * [\exp(0.5\sigma^2 - Z_{99}\sigma)], \text{where } \sigma^2 = \ln(CV^2 + 1)$$

$$WLA = 47.5\frac{\mu g}{L}, CV = 0.6, Z_{99} = 2.326, \sigma = 0.5545 \text{ and } \sigma^2 = 0.3075$$

LTA_a = 15.3 µg/L

$$LTA_c = WLA * [\exp(0.5\sigma_4^2 - Z_{99}\sigma_4)], \text{where } \sigma_4^2 = \ln(CV^2/4 + 1)$$

$$WLA = 75.1\ \mu g/L, CV = 0.6, Z_{99} = 2.326, \sigma_4 = 0.2936, \text{and } \sigma_4^2 = 0.0862$$

LTA_c = 39.6 µg/L

Determine the most limiting (lowest) LTA

$$\mathbf{LTA_a} \text{ is the most limiting} = 15.3\ \mu g/L$$

Calculate the MDL and AML

$$MDL = LTA_a[\exp(Z_{99}\sigma - 0.5\sigma^2)], \text{where } \sigma^2 = \ln(CV^2 + 1)$$

$$CV = 0.6, Z_{99} = 2.326, \sigma = 0.5545 \text{ and } \sigma^2 = 0.3075$$

MDL = 47.6 µg/L
Roundup to 48 µg/L

$$\text{AML} = \text{LTA}_a\ [\exp(Z_{95}\sigma_4 - 0.5\sigma_4^2)], \text{where } \sigma_4^2 = \ln(\text{CV}^2/4 + 1)$$

$$\text{CV} = 0.6, Z_{95} = 1.645, \sigma_4 = 0.2936, \text{and } \sigma_4^2 = 0.0862$$

AML = 23.75 µg/L
Roundup to 24 µg/L

C.2.1.6 Outfall 001 WQBEL for Temperature Difference (ΔT)

The MDL is based on MEΔT equaling 24 °C, a default CV of 0.6, and an assumed four samples per month. Because there is no acute criterion for temperature, there is also no LTA_a so LTA_c is the most limiting and is used in the derivation. DEC is establishing an MDL but not an AML because an AML is not needed to control temperature in the discharge. The resulting MDL is 39 °C. The following steps were conducted for calculation of the MDL per the *RPA/EL Guide*.

- **Determine LTAs:** The LTAs are calculated as follows:

$$LTA_c = WLA\ [\exp(0.5\sigma_4^2 - Z_{99}\sigma_4)], \text{ where } \sigma_4^2 = \ln(CV^2/4 + 1)$$

$$WLA = 23.5\ °C, CV = 0.6, Z_{99} = 2.326, \quad \sigma_4 = 0.2936 \text{ and } \sigma_4^2 = 0.0862$$

$LTA_{chronic}$ = 12.4 °C

Calculate the MDL

$$MDL = LTA_c\ [\exp(Z_{99}\sigma - 0.5\sigma^2)], \text{ where } \sigma^2 = \ln(CV^2 + 1)$$

$$CV = 0.6, Z_{99} = 2.326, \sigma = 0.5545, \text{ and } \sigma^2 = 0.3075$$

MDL = 38.6 °C
Roundup to 39 °C

C.2.1.7 Outfall 002 WQBEL for Salinity

The MDL and AML are based on the MEC equaling 354 ppt, a default CV of 0.6, and an assumed four samples per month. Because there is no acute criterion for salinity, there is also no LTA_a so LTA_c is the most limiting and is used in the derivation. Unlike temperature that has a physical constraint, DEC believes both an MDL and AML is necessary to control salinity. The resulting MDL is 580 ppt and the AML is 289 ppt. The following steps were conducted for calculation of the MDL per the *RPA/EL Guide.*

- **Determine LTAs:** The LTAs are calculated as follows:

$$LTA_{chronic} = WLA\ [\exp(0.5\sigma_4^2 - Z_{99}\sigma_4)], \text{ where } \sigma_4^2 = \ln(CV^2/4 + 1)$$

$$WLA = 353 \text{ ppt}, CV = 0.6, Z_{99} = 2.326, \quad \sigma_4 = 0.2936 \text{ and } \sigma_4^2 = 0.0862$$

$LTA_{chronic}$ = 186 ppt

Calculate the MDL

$$MDL = LTA_{chronic}\ [\exp(Z_{99}\sigma - 0.5\sigma^2)], \text{ where } \sigma^2 = \ln(CV^2 + 1)$$

$$CV = 0.6, Z_{99} = 2.326, \sigma = 0.5545, \text{ and } \sigma^2 = 0.3075$$

MDL = 579.8 ppt
Roundup to 580 ppt

Calculate the AML

$$AML = LTA_{chronic}\,[\exp(Z_{95}\sigma_4 - 0.5\sigma_4^2)], \text{ where } \sigma_4^2 = \ln(CV^2/4 + 1)$$

$$CV = 0.6,\ Z_{95} = 1.645,\ \sigma_4 = 0.2936, \text{ and } \sigma_4^2 = 0.0862$$

AML = 288.8 ppt
Roundup to 289 ppt

C.3 Other Numeric and Narrative Water Quality Criteria Requirements

In addition to the parameters evaluated in the RPA, narrative criteria that are applicable to both discharges and included as a general requirement in the reissued Permit is summarized below.

- **pH:** The numeric marine water quality criteria for pH is no less than 6.5 standard units (S.U.) and not greater than 8.5 S.U. and the 2013 Permit included these limits for pH in discharges for both Outfalls 001 and 002. The permittee has demonstrated the ability to meet the pH criteria at the point of discharge for these outfalls and the existing pH limits are retained in the Permit.

- **Residues:** Residues include floating solids, debris, sludge, deposits, foam, or other objectionable conditions. Per 18 AAC 70.020(b)(20)(A)(ii), a discharge "may not, alone or in combination with other substances, cause a film, sheen, or discoloration on the surface of the water or adjoining shorelines; cause leaching of toxic or deleterious substances; or cause a sludge, solid, or emulsion to be deposited beneath or upon the surface of the water, within the water column, on the bottom, or upon adjoining shorelines." Compliance with this residue criteria will be applied as a general conditions for all facility discharges.

APPENDIX D. Mixing Zone Analysis Checklist

Mixing Zone Authorization Checklist
based on Alaska Water Quality Standards (2003)

The purpose of the Mixing Zone Checklist is to guide the permit writer through the mixing zone regulatory requirements to determine if all the mixing zone criteria presented in the Alaska Administrative Code (AAC) at 18 AAC 70.240 through 18 AAC 70.270 are satisfied, as well as provide justification to authorize a mixing zone in an Alaska Pollution Discharge Elimination System permit. In order to authorize a mixing zone, all criteria must be met. The permit writer must document all conclusions in the permit Fact Sheet. However, if the permit writer determines that one criterion cannot be met, then a mixing zone is prohibited, and the permit writer need not include in the Fact Sheet the conclusions for when other criteria were met.

Criteria	Description	Resources	Regulation	Mixing Zone Approved Y/N
Size	Is the mixing zone as small as practicable? - Applicant collects and submits water quality ambient data for the discharge and receiving waterbody (e.g. flow and flushing rates)	Yes •Technical Support Document for Water Quality Based Toxics Control, subsections under section 4.3 •Water Quality Standards Handbook, Chapter 5. • DEC's RPA Guidance • EPA Permit Writers' Manual • Fact Sheet Section 3.3.	18 AAC 70.240 (a)(2) 18 AAC 70.245 (b)(1) - (b)(7) 18 AAC 70.255(e) (3) 18 AAC 70.255 (d)	Y

Technology	Were the most effective technological and economical methods used to disperse, treat, remove, and reduce pollutants? **If yes**, describe methods used in Fact Sheet at Section 3.3 Mixing Zone Analysis. Attach additional documents if necessary.	Yes Fact Sheet Section 3.3.2	18 AAC 70.240 (a)(3)	Y
Low Flow Design	**For river, streams, and other flowing fresh waters.** - Determine low flow calculations or documentation for the applicable parameters. Justify in Fact Sheet	N/A – Marine Discharge	18 AAC 70.255(f)	
Existing use	Does the mixing zone…			
	(1) partially or completely eliminate an existing use of the waterbody outside the mixing zone? **If yes, mixing zone prohibited.**	No Fact Sheet Section 3.3.3	18 AAC 70.245(a)(1)	Y
	(2) impair overall biological integrity of the waterbody? **If yes, mixing zone prohibited.**	No Fact Sheet Section 3.3.3	18 AAC 70.245(a)(2)	Y
	(3) provide for adequate flushing of the waterbody to ensure full protection of uses of the waterbody outside the proposed mixing zone? **If no, then mixing zone prohibited.**	Yes Fact Sheet Section 3.3.3	18 AAC 70.250(a)(3)	Y
	(4) cause an environmental effect or damage to the ecosystem that the Department considers to be so adverse that a mixing zone is not appropriate? **If yes, then mixing zone prohibited.**	No Fact Sheet Section 3.3.3	18 AAC 70.250(a)(4)	Y
	Does the mixing zone…			

Human consumption	(1) produce objectionable color, taste, or odor in aquatic resources harvested for human consumption? **If yes, mixing zone may be reduced in size or prohibited.**	No Fact Sheet Section 3.3.4	18 AAC 70.250(b)(2)	Y
	(2) preclude or limit established processing activities of commercial, sport, personal use, or subsistence shellfish harvesting? **If yes, mixing zone may be reduced in size or prohibited.**	No Fact Sheet Section 3.3.4	18 AAC 70.250(b)(3)	Y
Spawning Areas	Does the mixing zone…			
	(1) discharge in a spawning area for anadromous fish or Arctic grayling, northern pike, rainbow trout, lake trout, brook trout, cutthroat trout, whitefish, sheefish, Arctic char (Dolly Varden), burbot, and landlocked coho, king, and sockeye salmon? **If yes, mixing zone prohibited.**	No Fact Sheet Section 3.3.5	18 AAC 70.255 (h)	Y
Human Health	Does the mixing zone…			
	(1) contain bioaccumulating, bioconcentrating, or persistent chemical above natural or significantly adverse levels? **If yes, mixing zone prohibited.**	No Fact Sheet Section 3.3.6	18 AAC 70.250 (a)(1)	Y
	(2) contain chemicals expected to cause carcinogenic, mutagenic, teratogenic, or otherwise harmful effects to human health? **If yes, mixing zone prohibited.**	No Fact Sheet Section 3.3.6		Y

	(3) Create a public health hazard through encroachment on water supply or through contact recreation? **If yes, mixing zone prohibited.**	No Fact Sheet Section 3.3.6	18 AAC 70.250(a)(1)(C)	Y
	(4) meet human health and aquatic life quality criteria at the boundary of the mixing zone? **If no, mixing zone prohibited.**	Yes Fact Sheet Section 3.3.6	18 AAC 70.255 (b),(c)	Y
	(5) occur in a location where the Department determines that a public health hazard reasonably could be expected? **If yes, mixing zone prohibited.**	No Fact Sheet Section 3.3.6	18 AAC 70.255(e)(3)(B)	Y
Aquatic Life	Does the mixing zone…			
	(1) create a significant adverse effect to anadromous, resident, or shellfish spawning or rearing? **If yes, mixing zone prohibited.**	No Fact Sheet Section 3.3.7	18 AAC 70.250(a)(2)(A-C)	Y
	(2) form a barrier to migratory species? **If yes, mixing zone prohibited.**	No Fact Sheet Section 3.3.7		Y
	(3) fail to provide a zone of passage? **If yes, mixing zone prohibited.**	No Fact Sheet Section 3.3.7		Y
	(4) result in undesirable or nuisance aquatic life? **If yes, mixing zone prohibited.**	No Fact Sheet Section 3.3.7	18 AAC 70.250(b)(1)	Y
	(5) result in permanent or irreparable displacement of indigenous organisms? **If yes, mixing zone prohibited.**	No Fact Sheet Section 3.3.7	18 AAC 70.255(g)(1)	Y

	(6) result in a reduction in fish or shellfish population levels? **If yes, mixing zone prohibited.**	No Fact Sheet Section 3.3.7	18 AAC 70.255(g)(2)	Y
	(7) prevent lethality to passing organisms by reducing the size of the acute zone? **If yes, mixing zone prohibited.**	No Fact Sheet Section 3.3.7	18 AAC 70.255(b)(1)	Y
	(8) cause a toxic effect in the water column, sediments, or biota outside the boundaries of the mixing zone? **If yes, mixing zone prohibited.**	No Fact Sheet Section 3.3.7	18 AAC 70.255(b)(2)	Y
Endangered Species	Are there threatened or endangered (T/E species) at the location of the mixing zone?If yes, are there likely to be adverse effects to T/E species based on comments received from United States Fish & Wildlife Service or National Oceanic & Atmospheric Administration. If yes, will conservation measures be included in the permit to avoid adverse effects? **If yes, explain conservation measures in Fact Sheet. If no, mixing zone prohibited.**	Fact Sheet Sections 3.3.8 and Section 8.0	Program Description, 6.4.1 #5 18 AAC 70.250(a)(2)(D)	Y

INTENTIONALLY

BLANK PAGE