STATE OF ALASKA
ALASKA CLEAN/DRINKING WATER FUND
GREEN PROJECT ASSESSMENT FORM

As applicable under the EPA annual capitalization grants provided to the Alaska Clean Water Fund (ACWF) and Alaska Drinking Water Fund (ADWF) loan programs, a portion of funds appropriated shall be for projects to address green infrastructure, water or energy efficiency improvements or other environmentally innovative activities." To meet this condition under the federal grant for administering these funds, this assessment form is provided to document this eligibility or what is termed a "Categorical" or "Business Case" justification, which will be reviewed by DEC for provisional compliance. For more information on green infrastructure development, please review the following EPA web site:

http://cfpub.epa.gov/npdes/home.cfm?program_id=298

For those projects requiring a "Business Case," Part 2 will require completion to qualify a "traditional project" as green; justification is broken down into two parts, technical and financial. The technical part should use information from a variety of sources such as maintenance or operation records, engineering studies, project plans or other applicable documentation to identify problems (including any data on water and/or energy inefficiencies) in the existing facility, and that clarifies the technical benefits from the project in water and/or energy efficiency terms. Financial justification needs to show estimated savings to a project based on the technical benefits, and demonstrate that the green component of the project provides a substantial savings and environmental benefit.

For more information and assistance in completing this assessment form, please contact the Municipal Matching Grants & Loans program in Anchorage at 907-269-7673, or in Juneau at 907-465-5300.

GENERAL INFORMATION

Name of Community Petersburg Borough

Address P.O. Box 329
Petersburg, AK 99833

Contact Name Chris Cotta Title Asst. Public Works Dir. Telephone (907) 772-4430

PROJECT INFORMATION

Project Name Scow Bay I Pump Station Upgrade Location Petersburg, AK

Project Type: _____ New Construction X Upgrades

_____ Stormwater Infrastructure X Energy Efficiency Project

_____ Water Efficiency Project _____ Innovative Environmental Project

Green Project Description: Replace Scow Bay 1 Pump Station with a new, properly sized, more efficient station. Current station has worn out pumps, undersized wet well and "across the line" control systems. New station will feature intelligent electronic controls with variable frequency pump drives, optimized for energy efficiency.

PART 1 – GREEN PROJECT CATEGORY & COSTS

Identify the most appropriate "Green" Clean Water or Drinking Water category project type. Note, any selection with (BC) at the end will require a Business Case demonstration.

ENERGY EFFICIENCY – the use of improved technologies and practices to reduce the energy consumption of water quality projects.

_____ Wastewater/water utility energy audits _____ Clean power for public owned facilities

_____ Leak detection equipment ___X___ Retrofits/upgrades to pumps & treatment processes (BC)

_____ Replace/rehabilitation of distribution (BC) _____ Other:_____(BC)

WATER EFFICIENCY – the use of improved technologies and practices to deliver equal or better services with less water.

_____ Water meters _____ Fixture Retrofit _____ Landscape/Irrigation

_____ Graywater or other water recycling _____ Replace/rehabilitation of distribution (BC)

_____ Leak detection equipment _____ OTHER: _____ (BC)

GREEN INFRASTRUCTURE – Practices that manage and treat stormwater and that maintain and restore natural hydrology by infiltrating, evapotranspiring and capturing and using stormwater.

_____ Green Streets _____ Water harvesting and reuse

_____ Porous pavement, bioretention, trees, green roofs, water gardens, constructed wetlands

_____ Hydromodification for riparian buffers, floodplains, and wetlands

_____ Downspout disconnection to remove stormwater from combined sewers and storm sewers

_____ OTHER: _____ (BC)

ENVIRONMENTALLY INNOVATIVE PROJECTS – Demonstrate new/innovative approaches to managing water resources in a more sustainable way. This may include projects that achieve pollution prevention or pollutant removal with reduced costs and projects that foster adaptation of water protection programs and practices to climate change.

_____ Wetland restoration _____ Decentralized wastewater treatment solutions

_____ Water reuse _____ Green stormwater infrastructure _____ Water balance approaches

_____ Adaptation to climate change _____ Integrated water resource management

_____ OTHER: _____ (BC)

PROJECT & GREEN COMPONENT COSTS

	TOTAL PROJECT COSTS	TOTAL "GREEN" COMPONENT COSTS
Administration	$	$
Legal	$	$
Preliminary Studies/Reports	$	$
Engineering Design	$ 75,000	$
Inspection/Surveying/Construction Management	$ 60,000	$
Construction	$ 250,000	$ 250,000
Equipment	$ 15,000	$ 15,000
Contingencies	$	$
Other	$	$
Total Costs	$ 400,000	$ 265,000

PART 2 – PROJECT "BUSINESS CASE" TECHNICAL/FINANCIAL ASSESSMENT

TECHNICAL ANALYSIS OF BENEFITS*

In addition to this form, a supporting technical and financial analysis is required to verify energy and water saving efficiencies for any green component of the project. For green infrastructure and innovative environmental type projects, the analysis should include any applicable efficiency and environmental benefits. For assisting MGL in evaluating "Business Case" assessments of water main, meter, and pump facility replacement type projects, the attached form titled "ADWF - Water/Energy Efficiency Determination - Water Main Replacement/Meter/Pump Facility" is required to be completed. Once the form is complete along with any supporting documentation, please submit documentation to the MGL program for review and concurrence. Note, only water/energy efficiencies that achieve a 20% or greater increase in efficiency will categorically qualify as a Green project.

CERTIFICATION STATEMENT:

I certify the above information is current and accurate.

Chris Cotta
Name

Asst. Public Works Dir.
Title

Chris Cotta
Signature

9/19/14
Date

Submit Completed Form to:

Alaska Department of Environmental Conservation
Municipal Matching Grants & Loans
555 Cordova Street
Anchorage, AK 99501-2617

Green Project Business Case

Petersburg Borough – Scow Bay 1 Pump Station Upgrade

Business Case Summary

The Scow Bay 1 Pump Station Upgrade project is a key piece of Petersburg's overall wastewater capital project plan. Among the primary goals of the project are pollution prevention and energy efficiency.

Due to past efforts to expand the sanitary sewer collection system, the infrastructure at Scow Bay Pump Station #1 is being pushed above its design criteria. Inadequate wet well storage capacity and inefficient/worn pumps are causing the station to pump continuously during storm events as well as surcharging of the collection system until the pumps can catch up. In heavy storm events, bypass of the station to the environment has occurred to protect its electrical components from flooding. Replacement with a properly sized and rated submersible pump station is desired.

A second major goal of the project is to increase energy efficiency of the pumping system. Pumps at Scow Bay 1 were installed in 1990 and have lost significant efficiency over the years. Often both pumps must run to keep up with system flows. The control system uses "across the line" starters, with no control over pump speed once the pump is energized. Current efficiency of the pumps at Scow Bay 1 Pump Station is estimated at 25%. Planned pump station upgrades include complete replacement of the pump station, with all new high efficiency pumps and intelligent electronic control system featuring variable frequency drives.

Existing pumps at Scow Bay 1 Pump Station are (2 ea.) 5 hp Hydromatic 40 MPC with 9 5/32" impellers. New pumps will be (2 ea.) 5 hp Flygt model 3102s with model 462 impellers. Pump curves for the new pumps are attached for reference.

Technical and Financial Analysis

At Scow Bay 1 Pump Station, the pumps are worn to the point that the original pump curves aren't of much use in calculating flow rates and pump efficiencies. In addition, many parts of the pumps are no longer original. Taking these things into account, Public Works has calculated pump efficiencies using observed flow data (gathered through draw down testing) and the electrical usage of the pump station. A summary of the electrical costs for the Scow Bay 1 Pump Station are attached. Following are the efficiency numbers for existing pumps:

Operating Cost = $58.19/month (calendar year 2013)
Flow = 45,000 gals per day
Total Dynamic Head = 31.5 ft
System Horsepower Requirements = (31.5 ft of TDH*220 gpm)/3960 = 1.75 hp
Existing HP usage = (17.47 kw/day)/(3.4 hours/day runtime)/(.746 kw/hp)= 6.9 hp
Existing Efficiency = 1.75 hp required/6.9 hp used = 25%

Upgrades to the pump station will result in much higher pump efficiencies. Power usage for the new pump station is estimated as follows:

New Total Dynamic Head = 40 ft
New HP Requirement = (40 ft*280 gpm)/3960 = 2.83 hp
New HP Usage = 2.83 hp required/68% efficiency for new pumps = 4.16 hp
New KW = 4.16 hp*.746 kw/hp = 3.1 kw
New Electric Usage = (45,000 gpd/280 gpm)/60 min/hr = 2.7 hrs/day runtime
New Operating Cost = 3.1 kw*2.7 hr/day*30 day/month*.111 per kwh = $27.87/month

To summarize the above calculations:

Present electrical cost $58.19/month avg
Anticipated post-construction electric cost $27.87/month avg
Difference: Decrease of $30.32/month or 52% overall

As the preceding analysis illustrates, the Borough expects power usage to decrease sharply as a result of the pumping system upgrades at Scow Bay Pump Station 1. Additional savings are anticipated through use of variable frequency drives to optimize system efficiency.

Attachments: Power usage history for Scow Bay Pump Station 1 (1 page)
Scow Bay 1 Pump Station pump curve data (6 pages)

Scow Bay 1 Pump Station

PETERSBURG BOROUGH
Account 37158
192 MITKOF HIGHWAY
ELEC

	Metered Usage	Billed Usage		Charge
Aug-12	508.00	508.00		56.39
Sep-12	630.00	630.00		69.93
Oct-12	608.00	608.00		67.49
Nov-12	597.00	597.00		66.27
Dec-12	647.00	647.00		71.82
Jan-13	731.00	731.00		81.14
Feb-13	711.00	711.00		78.92
Mar-13	503.00	503.00		55.83
Apr-13	417.00	417.00		46.29
May-13	546.00	546.00		60.61
Jun-13	466.00	466.00		51.73
Jul-13	486.00	486.00		53.95
Aug-13	325.00	325.00		36.08
Sep-13	495.00	495.00		54.95
Oct-13	570.00	570.00		63.27
Nov-13	588.00	588.00		65.27
Dec-13	453.00	453.00		50.28
Jan-14	544.00	544.00		60.38
Feb-14	296.00	296.00		32.86
Mar-14	375.00	375.00		41.63
Apr-14	498.00	498.00		55.28
May-14	354.00	354.00		39.29
Jun-14	318.00	318.00		35.30
Jul-14	258.00	258.00		28.64
Aug-14	454.00	454.00		50.39
Maximum:	731	731	$	81.14
Minimum:	258	258	$	28.64
Monthly Average:	495	495		54.96
Avg Cost/Usage:				0.1110

2013 total electric cost $698.32
Monthly avg $ 58.19
2013 total electric use 6291 kwh
Cost per kwh $.111

xylem
Let's Solve Water

NP 3102 MT 3~ 462

Technical specification

FLYGT

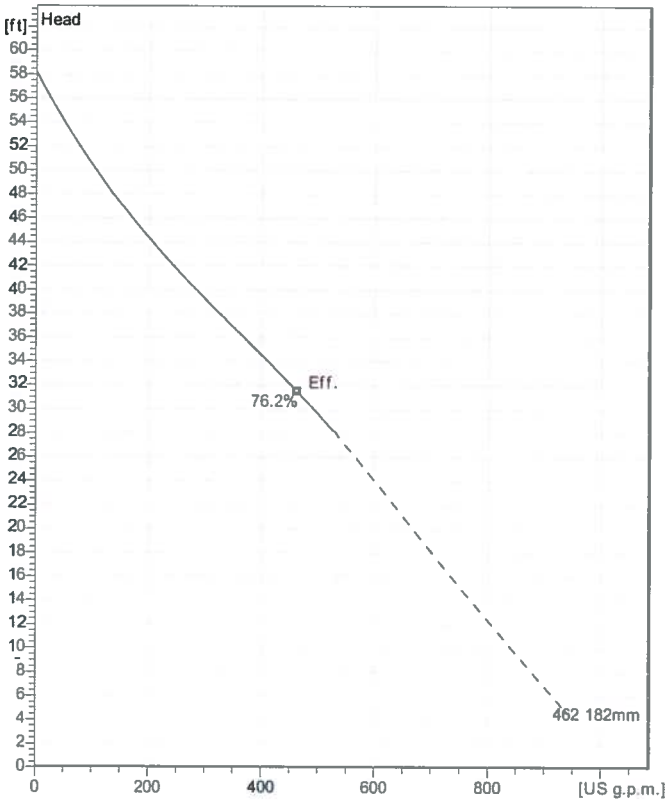

Water, pure

Curve according to: ISO 9906 grade 2 annex 1 or 2

Note: Picture might not correspond to the current configuration.

General

Patented self cleaning semi-open channel impeller, ideal for pumping in waste water applications. Possible to be upgraded with Guide-pin® for even better clogging resistance. Modular based design with high adaptation grade.

Impeller

Impeller material	Grey cast iron
Discharge Flange Diameter	100 mm
Suction Flange Diameter	100 mm
Impeller diameter	182 mm
Number of blades	2

Motor

Motor #	N3102.181 18-11-4AL-W 5hp
Stator variant	1
Frequency	60 Hz
Rated voltage	460 V
Number of poles	4
Phases	3~
Rated power	5 hp
Rated current	6.8 A
Starting current	42 A
Rated speed	1745 1/min
Power factor	
1/1 Load	0.81
3/4 Load	0.75
1/2 Load	0.63
Efficiency	
1/1 Load	85.0 %
3/4 Load	85.0 %
1/2 Load	83.5 %

Configuration

Installation: P - Semi permanent, Wet

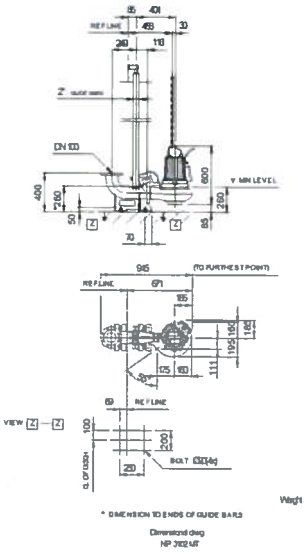

Project	Project ID	Created by	Created on	Last update
			2014-09-15	

xylem
Let's Solve Water

NP 3102 MT 3~ 462

FLYGT

Performance curve

Pump

Discharge Flange Diameter	100 mm
Suction Flange Diameter	100 mm
Impeller diameter	182 mm
Number of blades	2

Motor

Motor #	N3102.181 18-11-4AL-W 5hp
Stator variant	1
Frequency	60 Hz
Rated voltage	460 V
Number of poles	4
Phases	3~
Rated power	5 hp
Rated current	6.8 A
Starting current	42 A
Rated speed	1745 1/min

Power factor	
1/1 Load	0.81
3/4 Load	0.75
1/2 Load	0.63
Efficiency	
1/1 Load	85.0 %
3/4 Load	85.0 %
1/2 Load	83.5 %

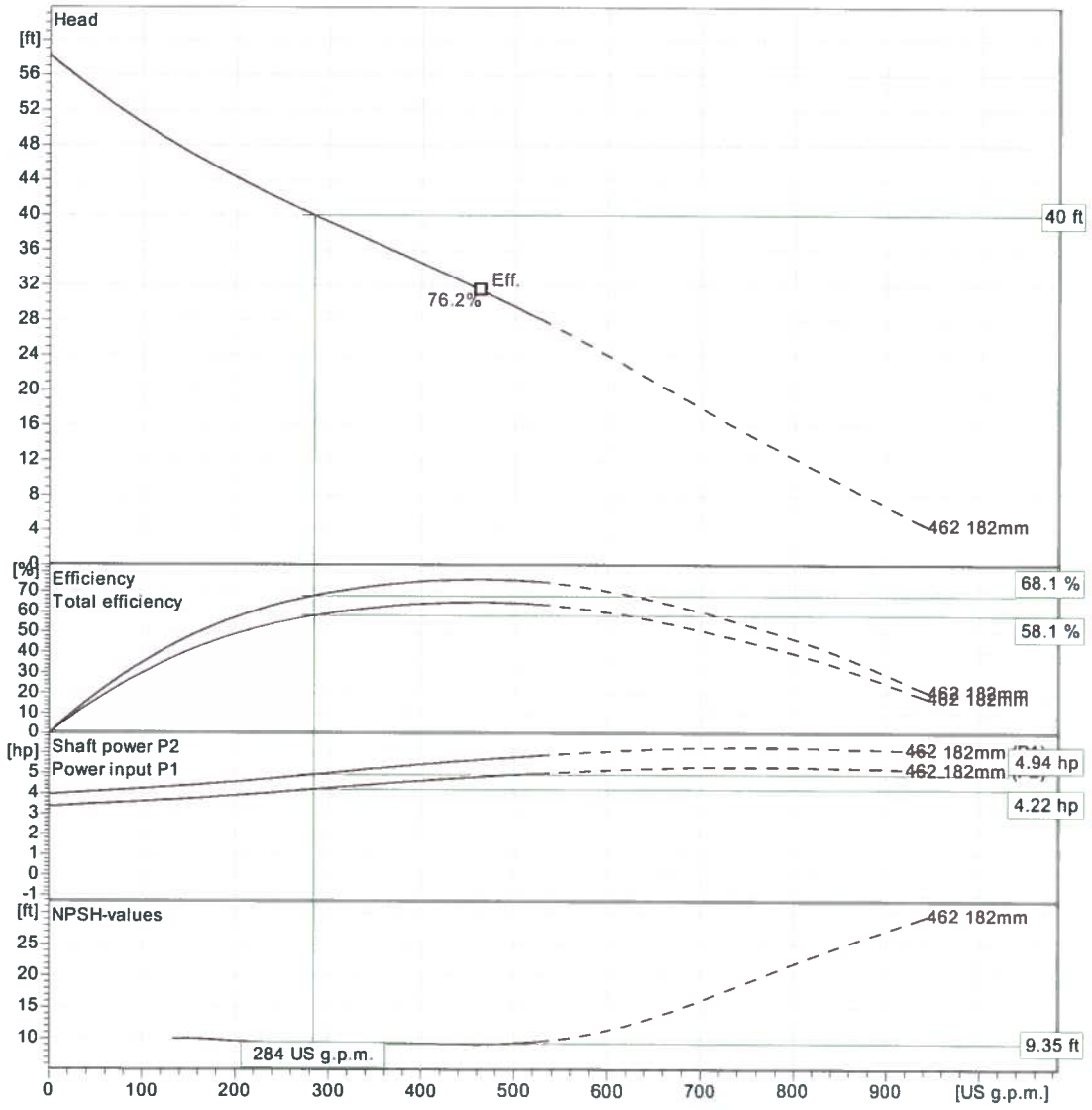

Water, pure

Curve according to: ISO 9906 grade 2 annex 1 or 2

Project	Project ID	Created by	Created on	Last update
			2014-09-15	

xylem
Let's Solve Water

NP 3102 MT 3~ 462

Duty Analysis

FLYGT

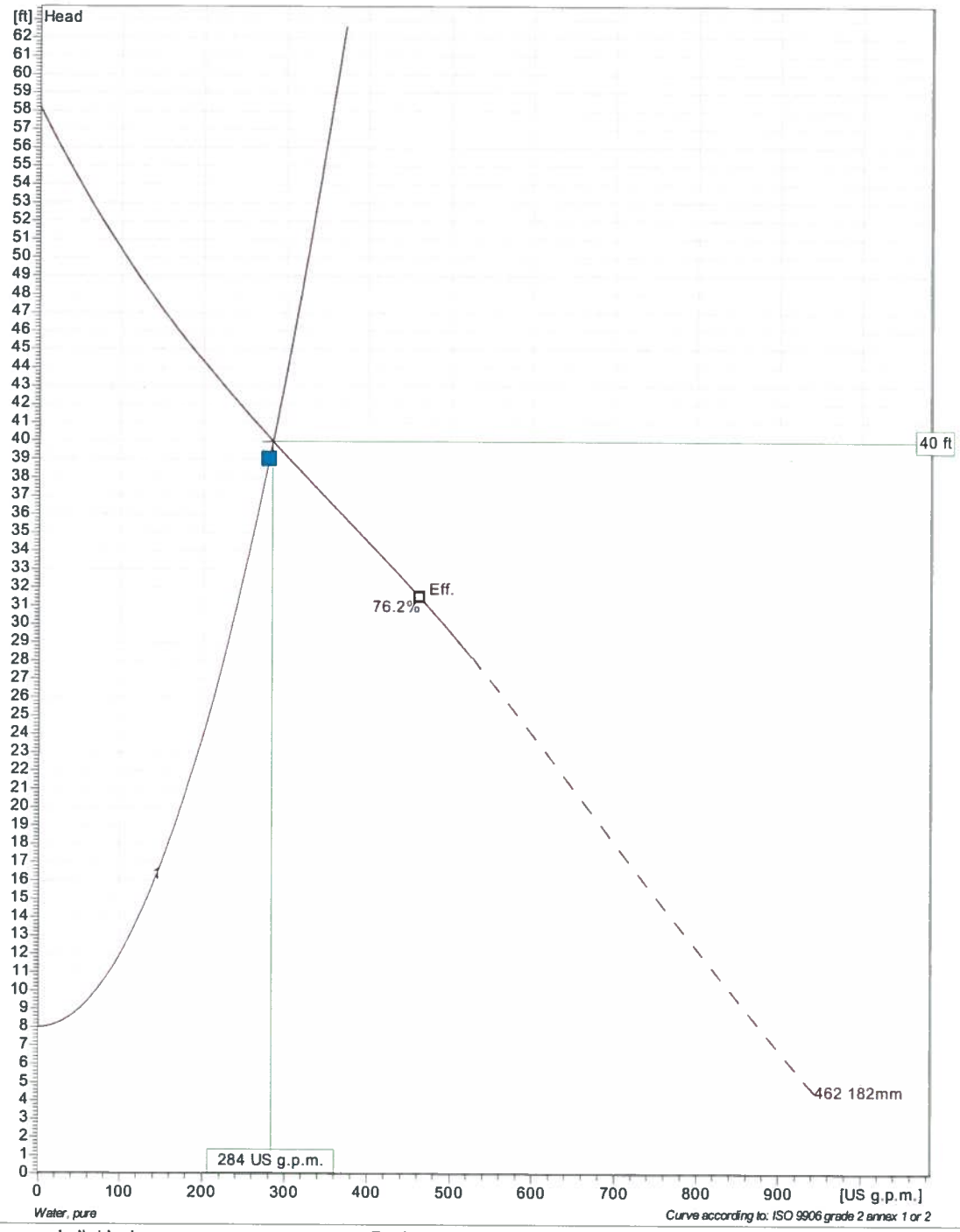

Pumps running /System	Individual pump Flow	Head	Shaft power	Total Flow	Head	Shaft power	Hyd eff.	Specific energy	NPSHre
1	284 US g.p.m.	40 ft	4.22 hp	284 US g.p.m.	40 ft	4.22 hp	68.1 %	216 kWh/US MG	9.35 ft

Project	Project ID	Created by	Created on	Last update
			2014-09-15	

xylem
Let's Solve Water

NP 3102 MT 3~ 462

VFD Curve

FLYGT

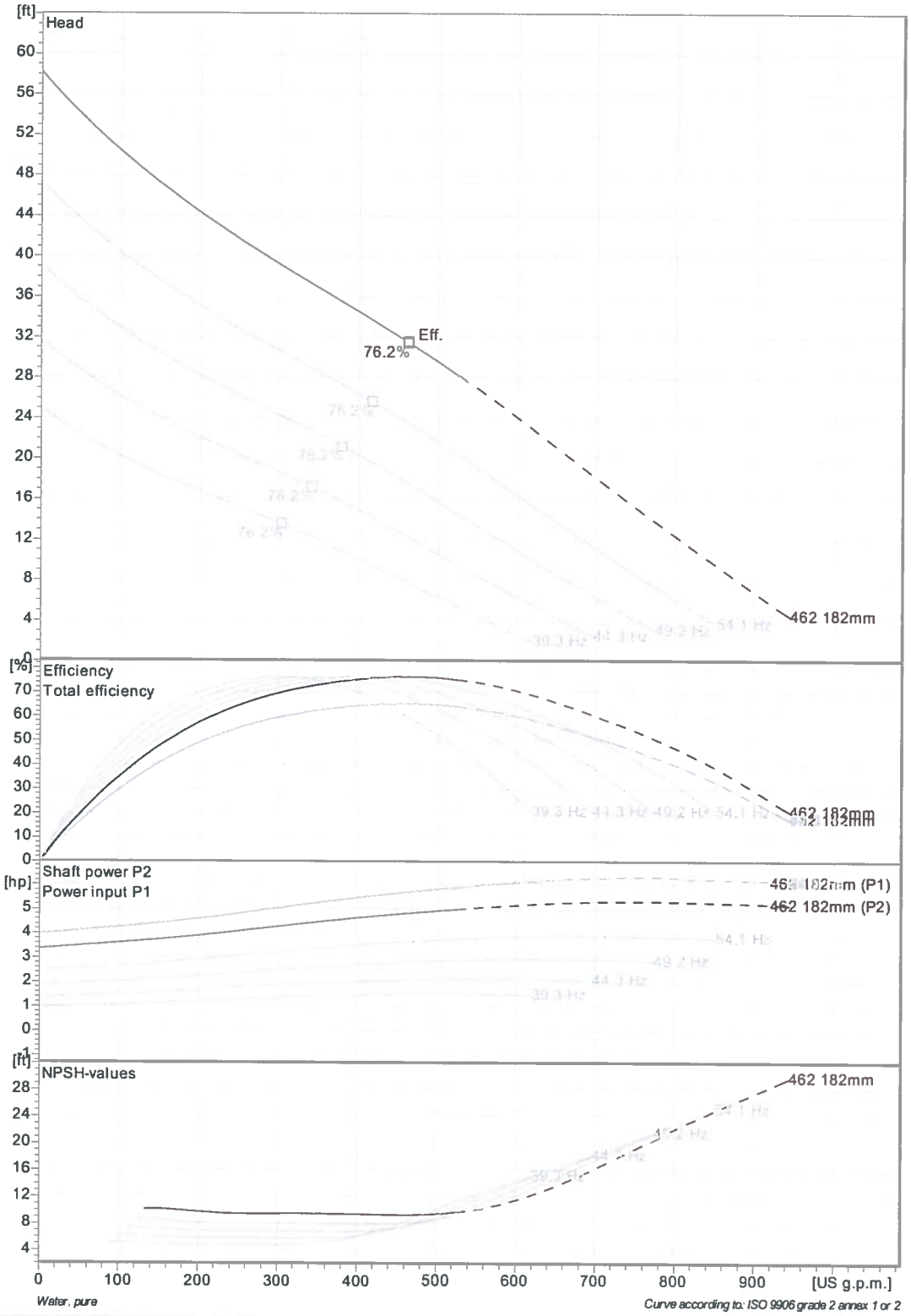

Project	Project ID	Created by	Created on	Last update
			2014-09-15	

xylem
Let's Solve Water

NP 3102 MT 3~ 462

VFD Analysis

FLYGT

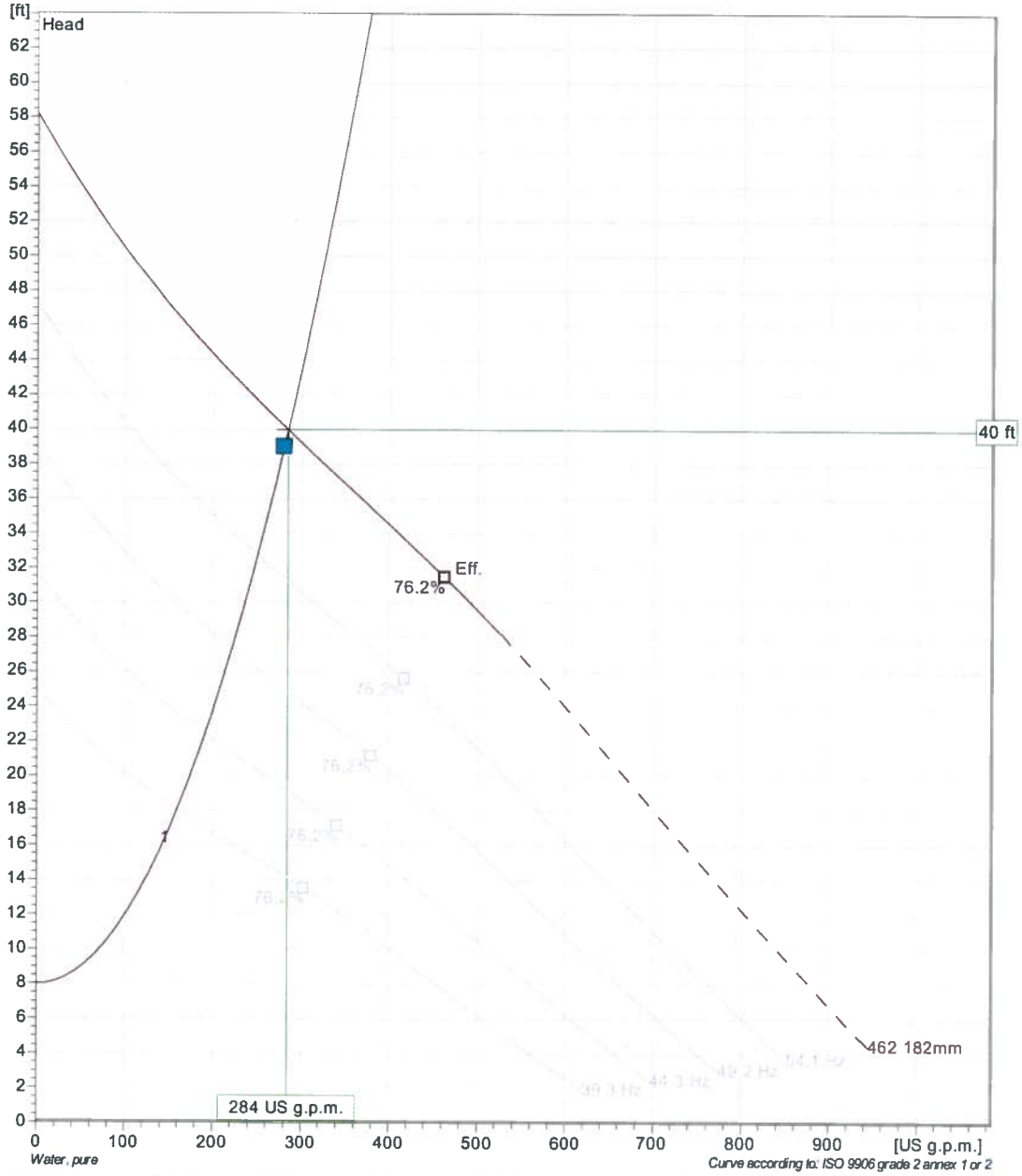

Pumps running /System	Individual pump Frequency	Flow	Head	Shaft power	Total Flow	Head	Shaft power	Hyd eff.	Specific energy	NPSHre
1	60 Hz	284 US g.p.m.	40 ft	4.22 hp	284 US g.p.m.	40 ft	4.22 hp	68.1 %	216 kWh/US MG	9.35 ft
1	54.1 Hz	250 US g.p.m.	32.8 ft	3.08 hp	250 US g.p.m.	32.8 ft	3.08 hp	67.4 %	238 kWh/US MG	7.92 ft
1	49.2 Hz	221 US g.p.m.	27.3 ft	2.29 hp	221 US g.p.m.	27.3 ft	2.29 hp	66.6 %	262 kWh/US MG	6.81 ft
1	44.3 Hz	191 US g.p.m.	22.4 ft	1.66 hp	191 US g.p.m.	22.4 ft	1.66 hp	65.5 %	296 kWh/US MG	5.76 ft
1	39.3 Hz	160 US g.p.m.	18.1 ft	1.15 hp	160 US g.p.m.	18.1 ft	1.15 hp	63.6 %	345 kWh/US MG	4.79 ft

Project	Project ID	Created by	Created on	Last update
			2014-09-15	

xylem
Let's Solve Water

NP 3102 MT 3~ 462

Dimensional drawing

FLYGT

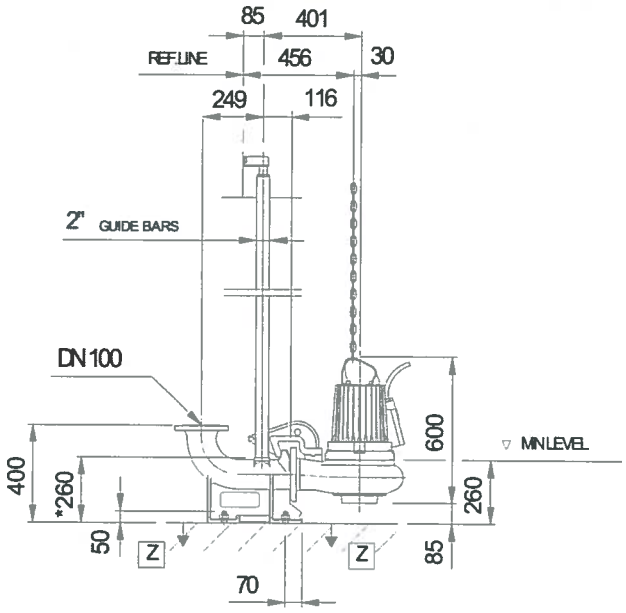

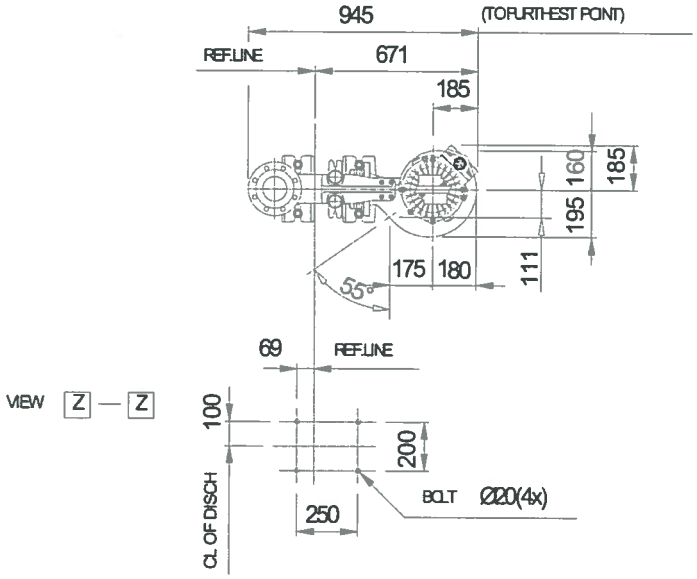

Weight

* DIMENSION TO ENDS OF GUIDE BARS

Dimensional dwg
NP3102MT

Project	Project ID	Created by	Created on	Last update
			2014-09-15	