FAX TRANSMITTAL

STATE OF ALASKA
OFFICE OF THE GOVERNOR

TONY KNOWLES
GOVERNOR

DIVISION OF GOVERNMENTAL
COORDINATION
PO BOX 110030
JUNEAU AK 99811-0030

Telephone: (907) 465-3562
Fax: (907) 465-3075

To: Mark Minnillo, DFG
Dave Sturdevant, DEC
Jim Anderson, DNR

Date: June 27, 2001 0

Fax No.: 826-2562
465-5274
586-2954

From: Jennifer R. Garland
Project Review Coordinator
Phone 465-3177

Subject: Whale Pass Updated Drawings

Pages: 11+cover

Message: Hello- attached are drawings of the Whale Pass dock area with the new dock design. Teresa is requesting that we restart the clock ASAP, so I plan to do that today, unless I hear any objections. Comments would be due in 10 days. Let me know ASAP if you have major problems with the new design. Thanks. - Jen

FAX TRANSMITTAL

USDA Forest Service
Thorne Bay Ranger District
P.O. Box 19001
Thorne Bay, AK 99919
FAX # (907) 828-3309

Date: JUNE 27 2001
To: JEN GARLAND DGC
FAX: (907) 465-3075
Total Pages 11

From: Teresa Trulock
Phone: (907) 828-3212
Email: ttrulock@fs.fed.us

Message: JEN, HERE IS A NEW SET OF DRAWINGS FOR WHALE PASS AS I MENTIONED ON THE PHONE YESTERDAY. I VISITED W/ MARK MINNILLO YESTERDAY WHO SEEMED COMFORTABLE W/ THE NEW DESIGN. I'D LIKE TO ~~GET~~ GET THE CLOCK STARTED AGAIN ON OUR REVIEW. THANKS

TERESA

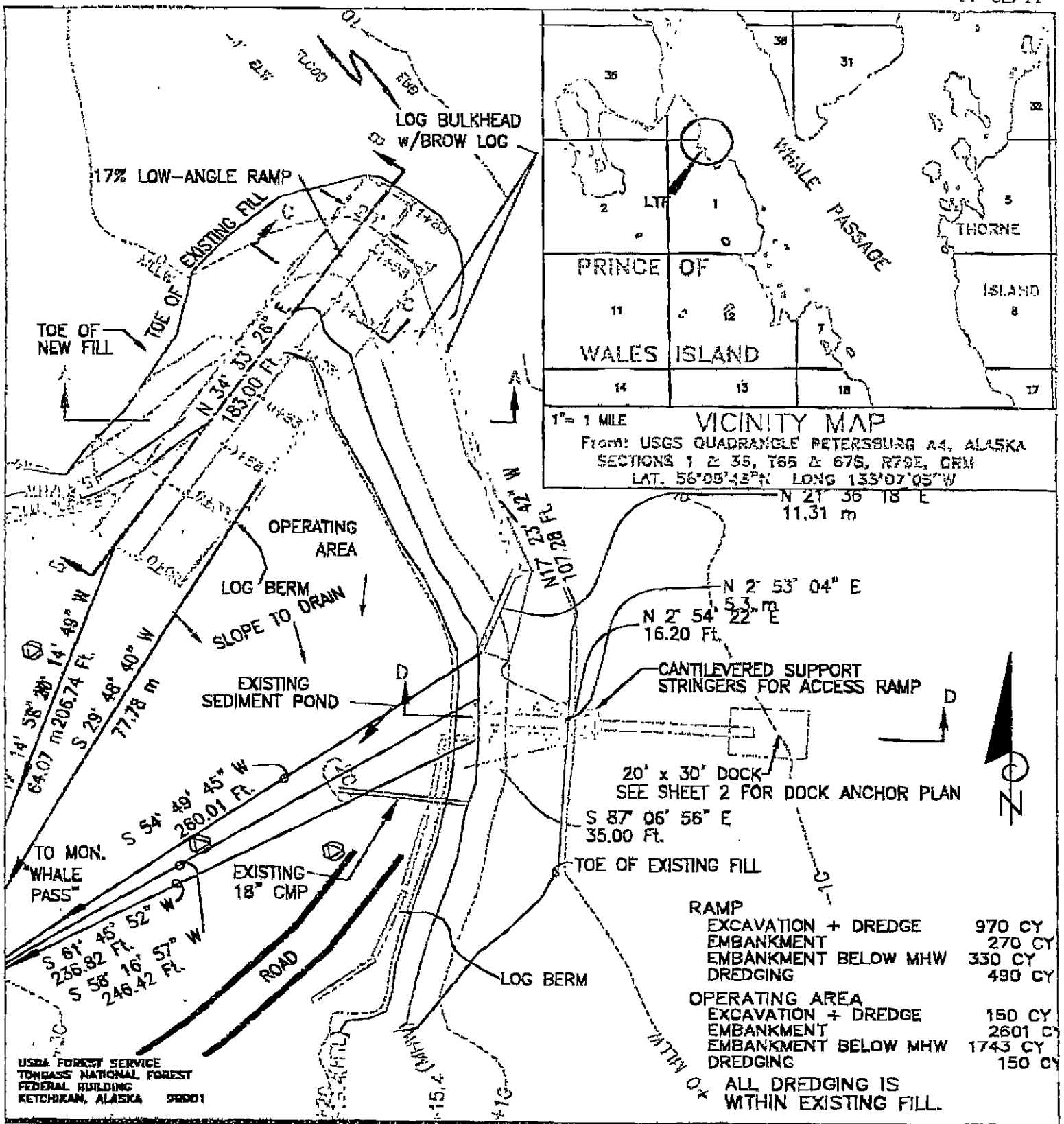

PURPOSE:
TRANSFER LOGS TO WATER, and FLOATING DOCK

drawn by: K. Elmore

DEVELOPMENT PLAN

0 50
1 inch = 50 feet

MODIFICATION TO WHALE PASS LOG TRANSFER FACILITY
SECTIONS 1 & 36, T66 & 67S, R79E, CRM
PRINCE OF WALES ISLAND, S.E. ALASKA

Sheet 1 of 10

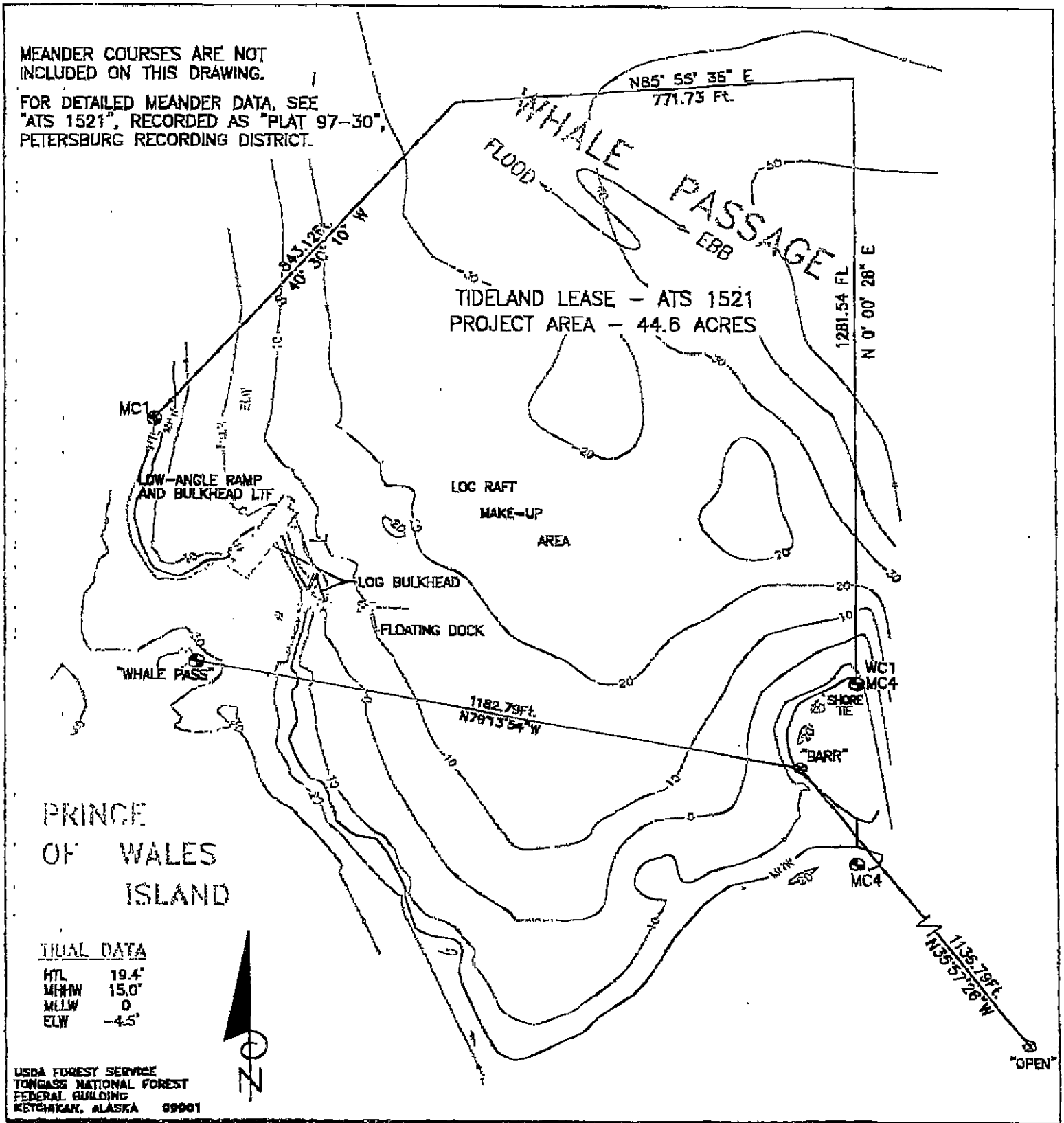

PURPOSE:

TRANSFER LOGS TO WATER

drawn by: K. Elmore

LOG RAFT AREA

0 250

1 inch = 250 feet

MODIFICATION OF:

WHALE PASS LOG TRANSFER FACILITY

SECTIONS 1 & 35, T66 & 67S, R79E, CRM

PRINCE OF WALES ISLAND, S.E. ALASKA

Sheet 2 of 10

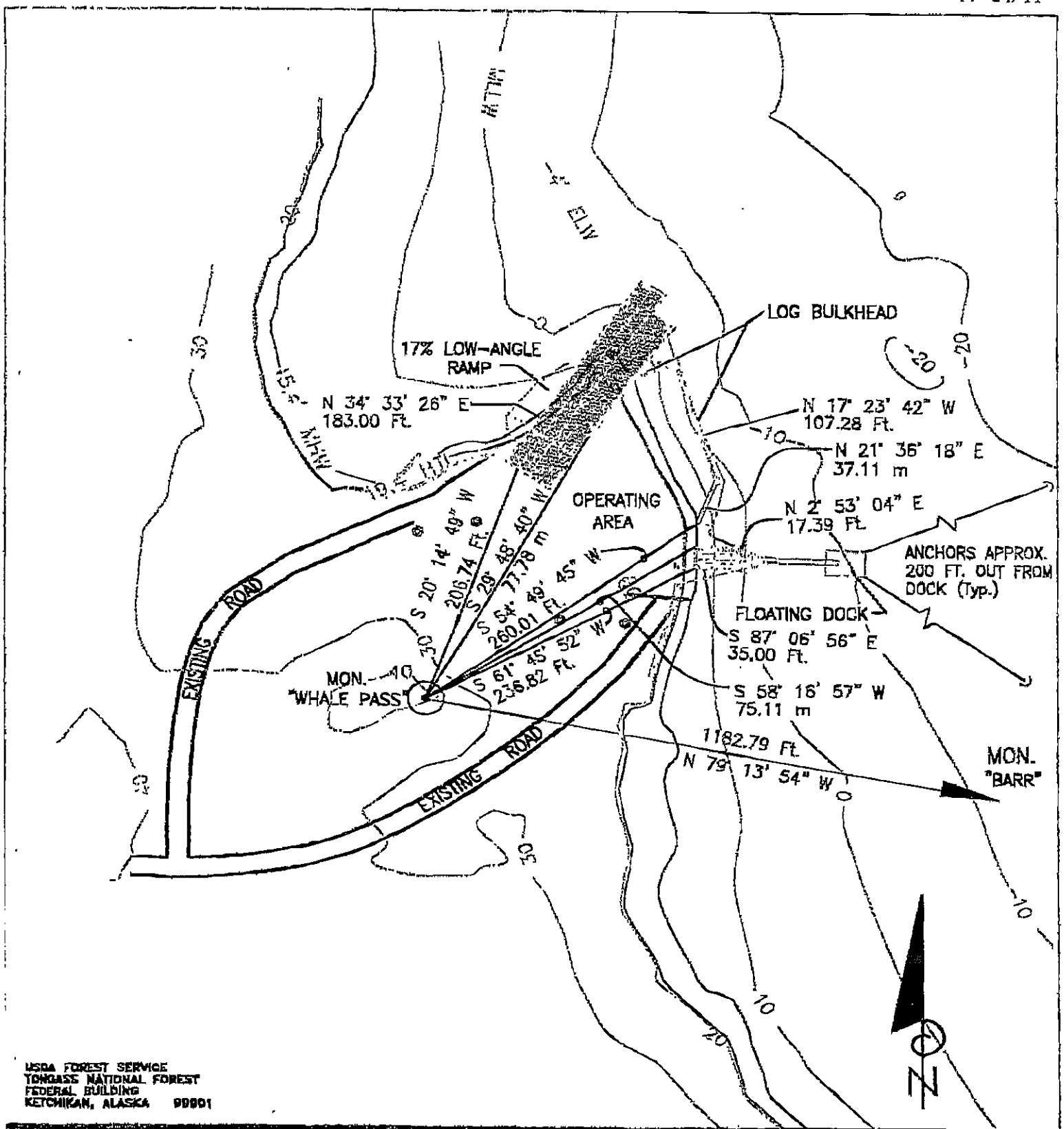

USDA FOREST SERVICE
TONGASS NATIONAL FOREST
FEDERAL BUILDING
KETCHIKAN, ALASKA 99901

PURPOSE	PLAN VIEW	MODIFICATION TO WHALE PASS LOG TRANSFER FACILITY
TRANSFER LOGS TO WATER, and FLOATING DOCK	0 100 1 inch = 100 feet	SECTIONS 1 & 36, T66 & 67S, R79E, CRM PRINCE OF WALES ISLAND, S.E. ALASKA
drawn by: K. Elmore		Sheet 3 of 10

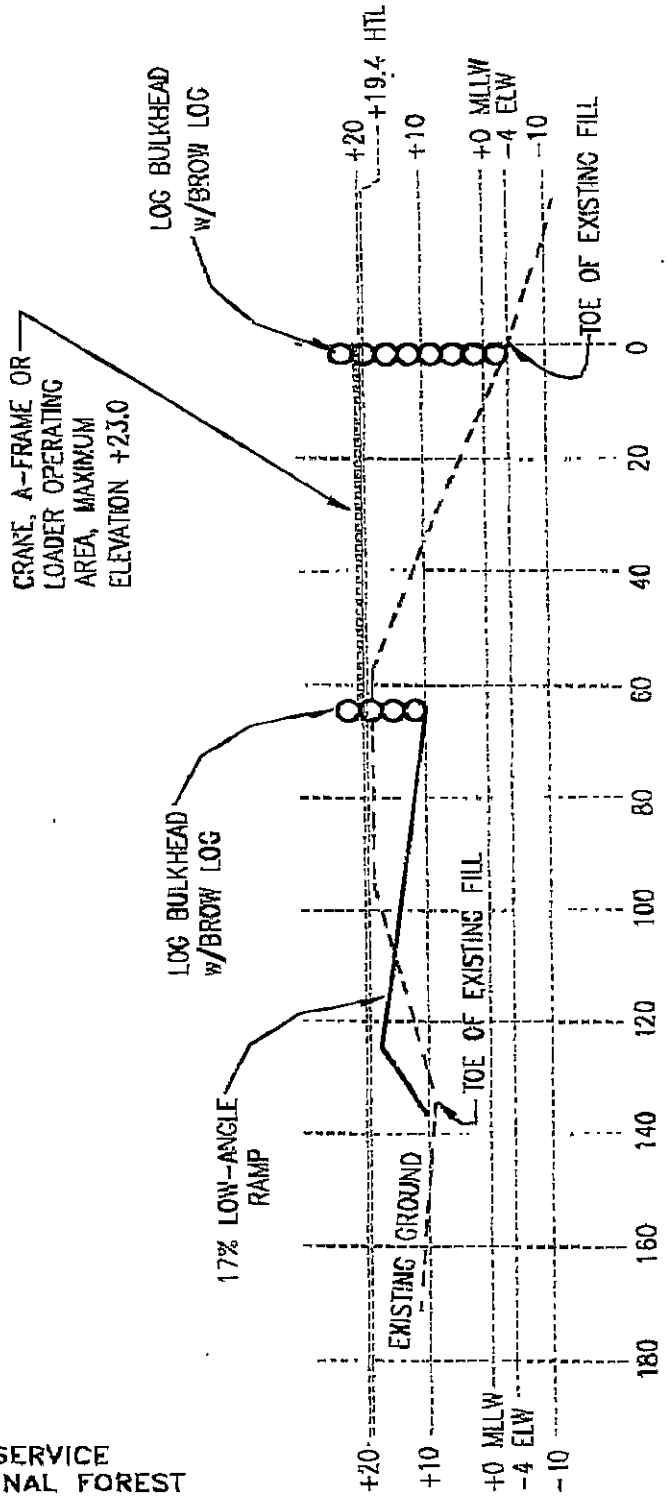

SECTION A-A

USDA FOREST SERVICE
TONGASS NATIONAL FOREST
FEDERAL BUILDING
KETCHIKAN, ALASKA 99901

PURPOSE:
TRANSFER LOGS TO WATER, and FLOATING DOCK
drawn by: K. Elmore

SECTION A-A

0 30
1 inch = 30 feet

MODIFICATION OF WHALE PASS LOG TRANSFER FACILITY
SECTIONS 1 & 36, T66 & 67S, R79E, CRM
PRINCE OF WALES ISLAND, S.E. ALASKA
Sheet 4 of 10

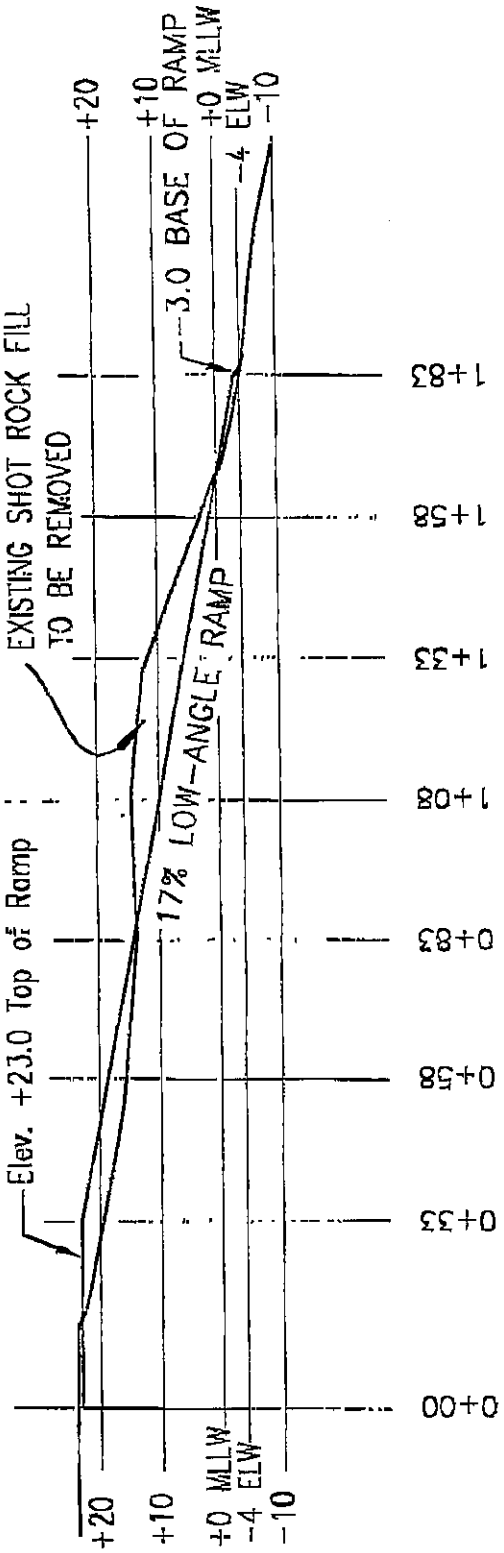

SECTION B-B

USDA FOREST SERVICE
TONGASS NATIONAL FOREST
FEDERAL BUILDING
KETCHIKAN, ALASKA 99901

PURPOSE:
TRANSFER LOGS TO WATER, and FLOATING DOCK

drawn by: K. Elmore

SECTION B-B

0 30
1 inch = 30 feet

MODIFICATION OF
WHALE PASS
LOG TRANSFER FACILITY
SECTIONS 1 & 36, T66 & 67S, R79E, CRM
PRINCE OF WALES ISLAND, S.E. ALASKA

Sheet 5 of 10

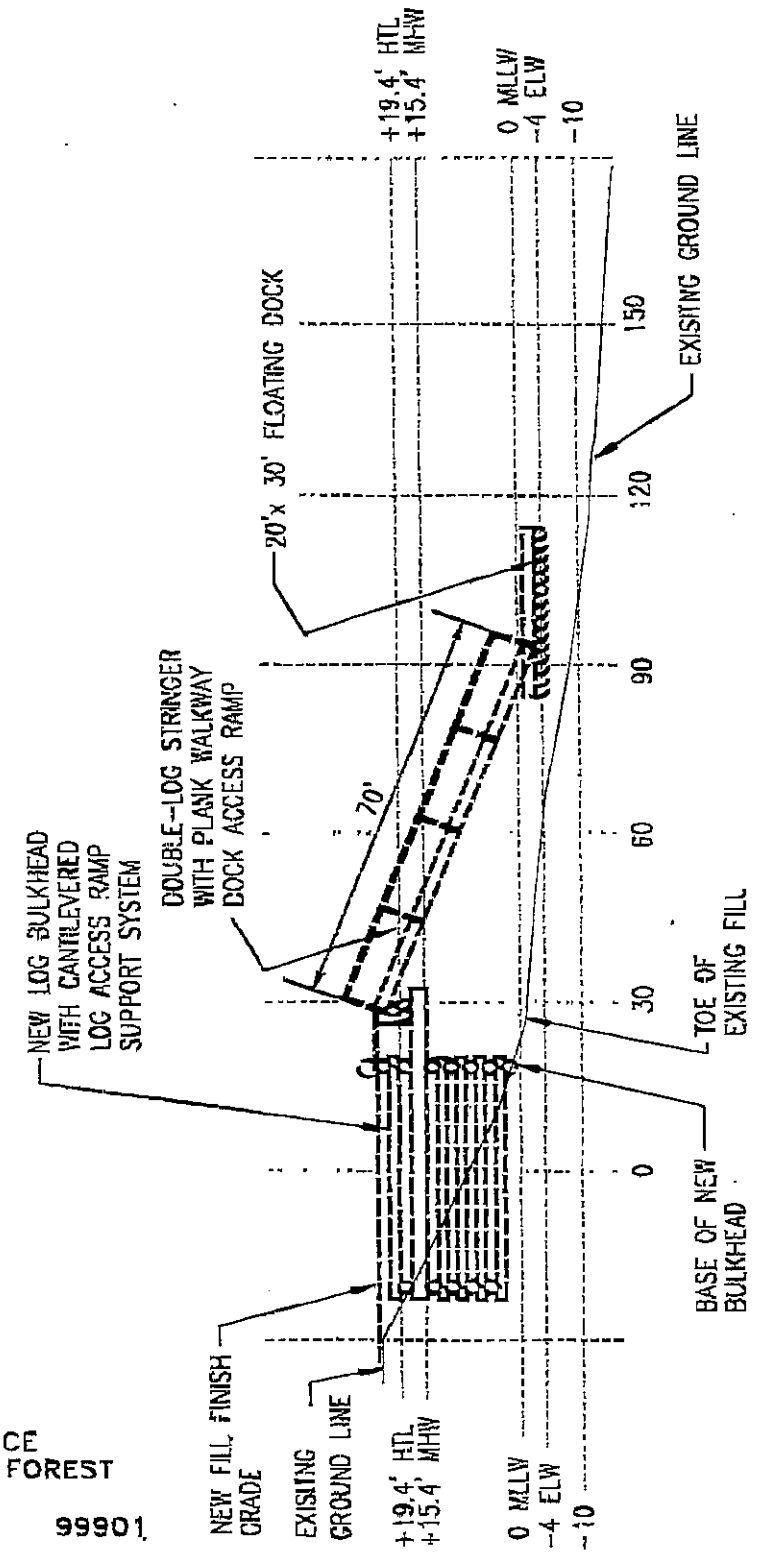

SECTION D-D

USDA FOREST SERVICE
TONGASS NATIONAL FOREST
FEDERAL BUILDING
KETCHIKAN, ALASKA 99901

PURPOSE:
TRANSFER LOGS TO WATER, and FLOATING DOCK

drawn by: K. Elmore

SECTION D-D

0 30
1 inch = 30 feet

MODIFICATION OF WHALE PASS LOG TRANSFER FACILITY

SECTIONS 1 & 36, T66 & 67S, R79E, CRM
PRINCE OF WALES ISLAND, S.E. ALASKA

Sheet 6 of 10

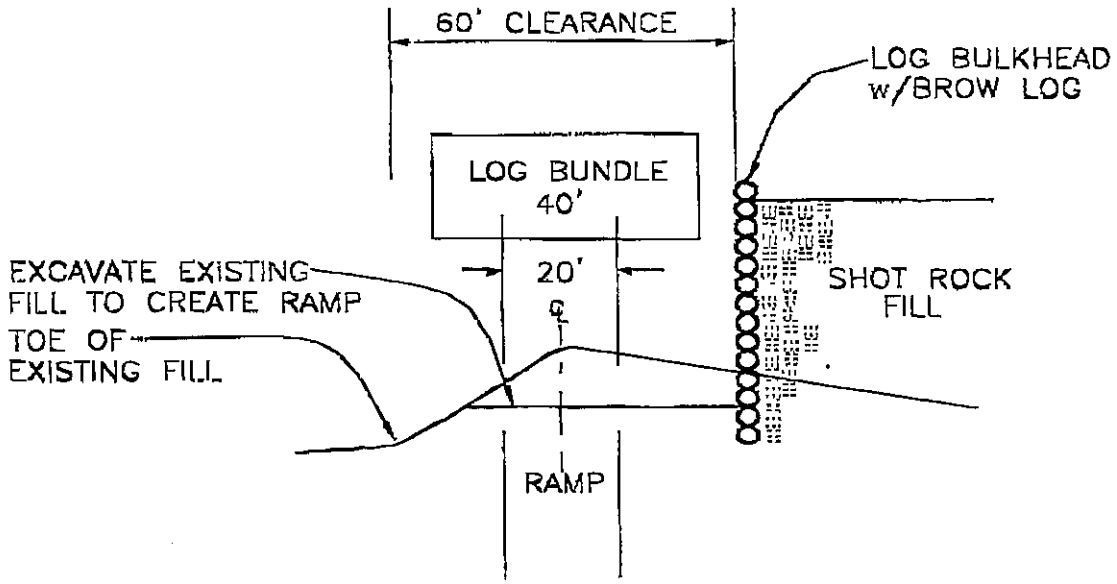

SECTION C – C
17% LOW-ANGLE RAMP

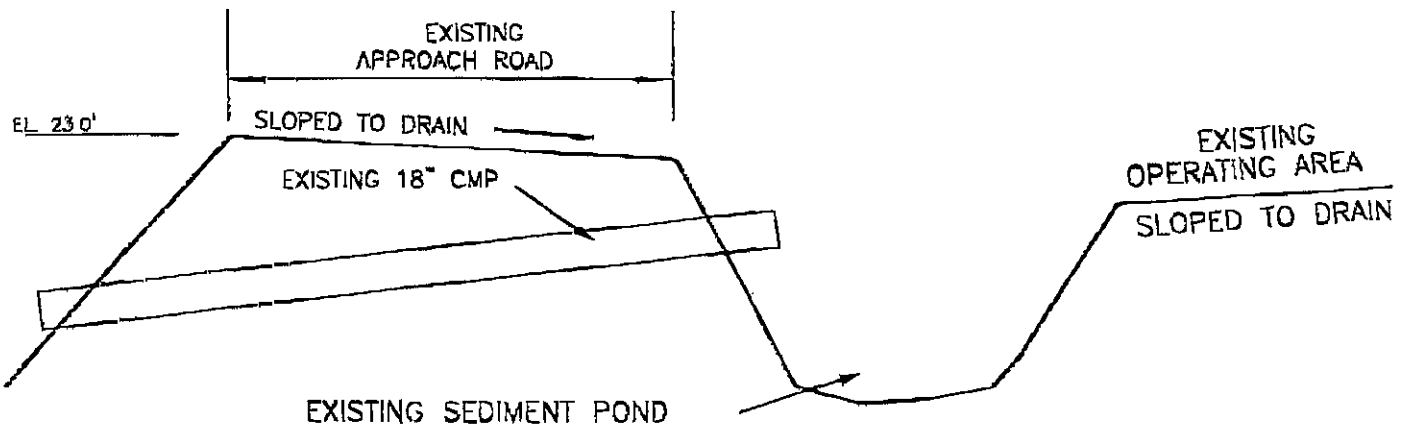

USDA FOREST SERVICE
TONGASS NATIONAL FOREST
FEDERAL BUILDING
KETCHIKAN, ALASKA 99901

SEDIMENT POND

PURPOSE: TRANSFER LOGS TO WATER, and FLOATING DOCK drawn by: K. Elmore	SECTION C–C and SEDIMENT POND DETAILS NO SCALE	MODIFICATION OF WHALE PASS LOG TRANSFER FACILITY SECTIONS 1 & 36, T66 & 67S, R79E, CRM PRINCE OF WALES ISLAND, S.E. ALASKA Sheet 7 of 10

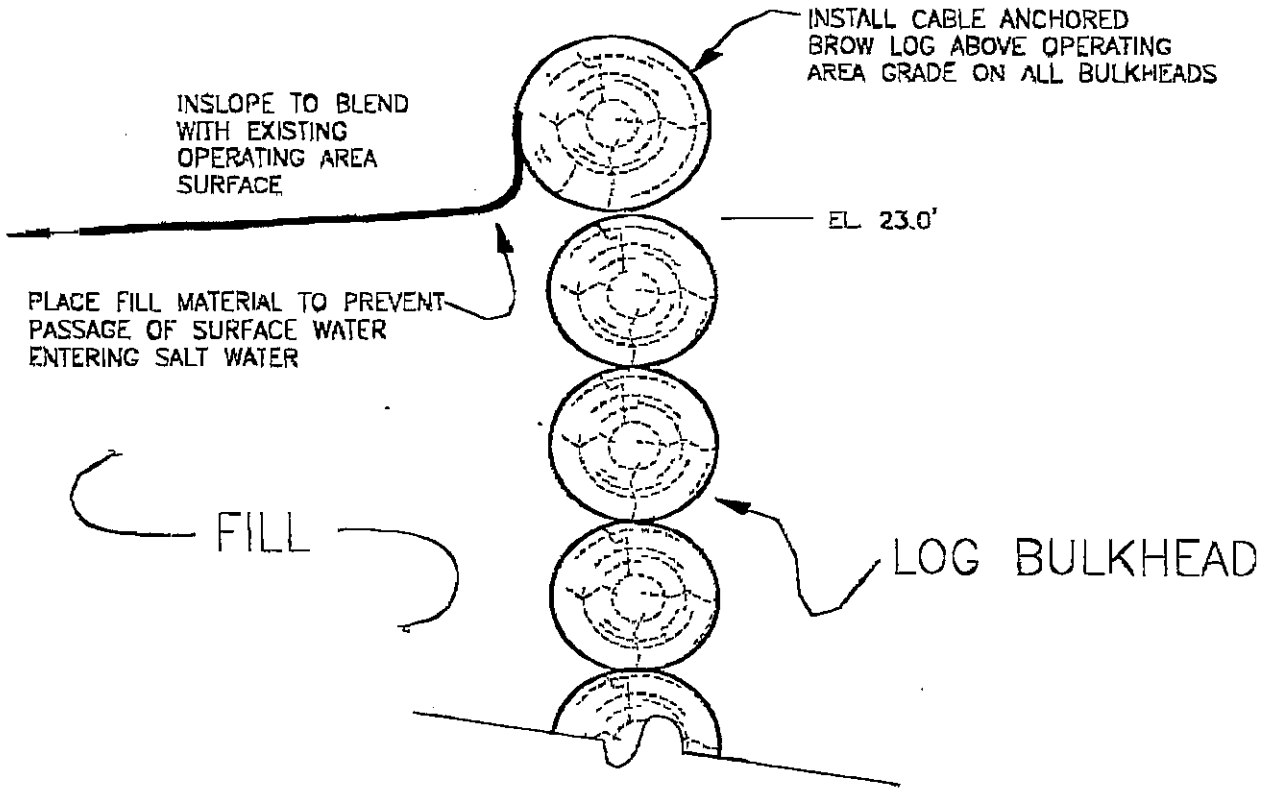

BROW LOG DETAIL

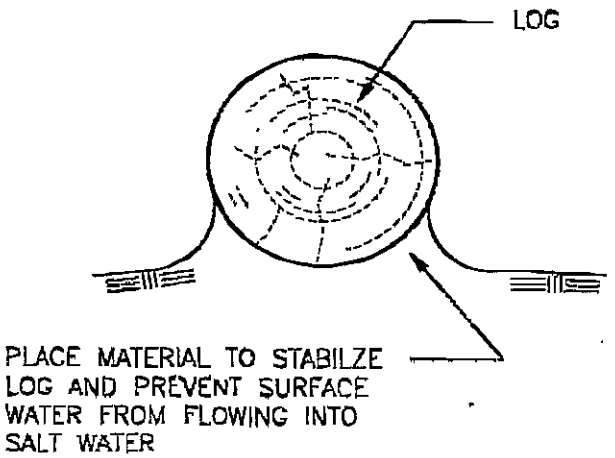

LOG BERM

USDA FOREST SERVICE
TONGASS NATIONAL FOREST
FEDERAL BUILDING
KETCHIKAN, ALASKA 99901

PURPOSE:		
TRANSFER LOGS TO WATER, and FLOATING DOCK drawn by: K. Elmore	BROW LOG DETAIL and LOG RAMP DETAIL NO SCALE	MODIFICATION OF WHALE PASS LOG TRANSFER FACILITY SECTIONS 1 & 36, T66 & 67S, R79E, CRM PRINCE OF WALES ISLAND, S.E. ALASKA Sheet 8 of 10

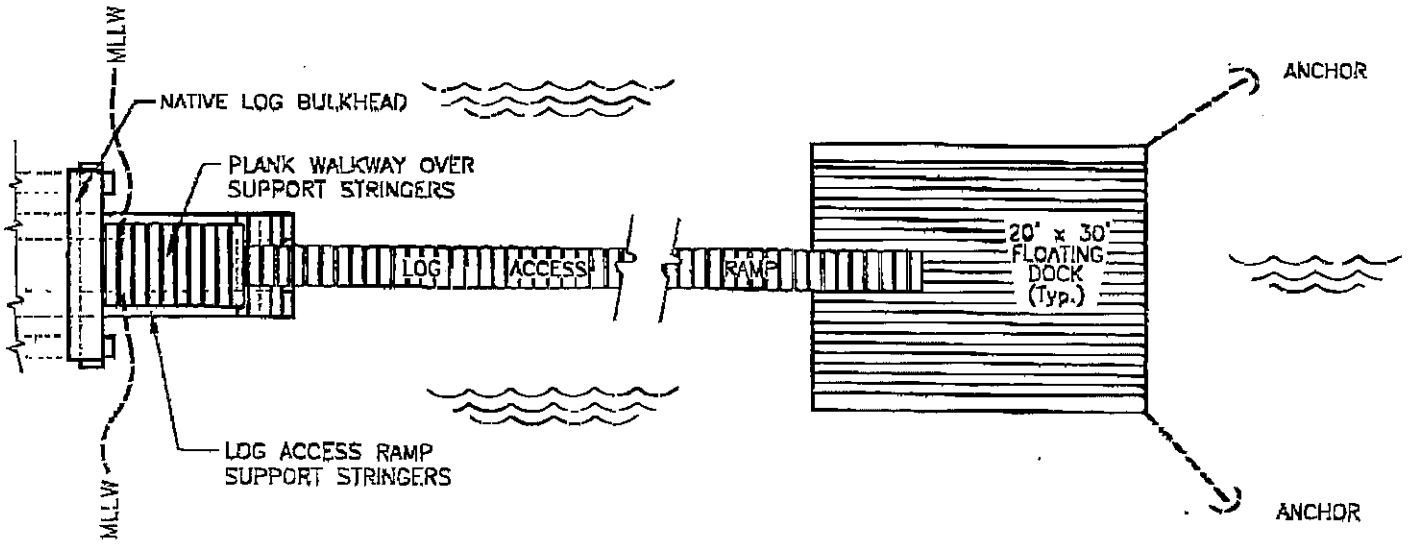

ACCESS RAMP AND DOCK

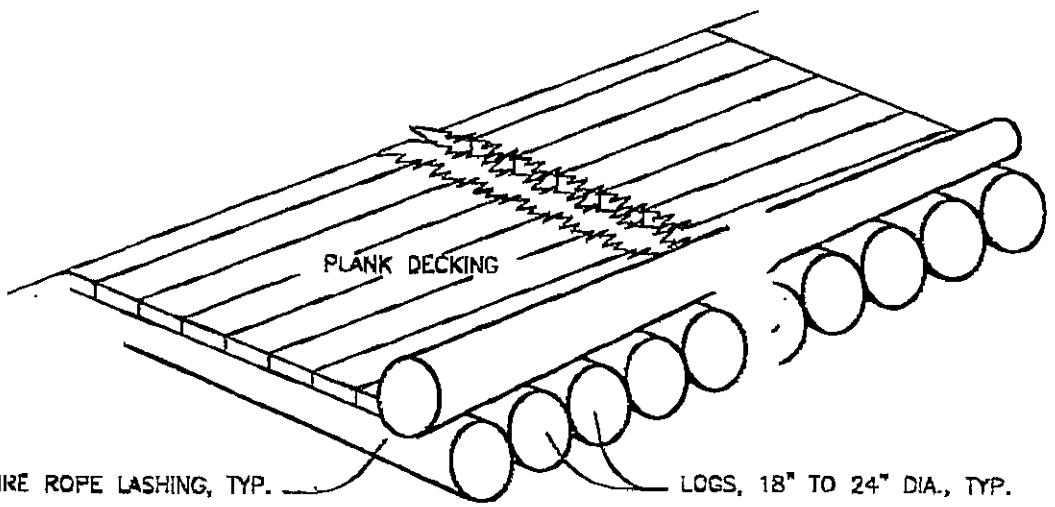

USDA FOREST SERVICE
TONGASS NATIONAL FOREST
FEDERAL BUILDING
KETCHIKAN, ALASKA 99901

FLOATING DOCK

PURPOSE:		
TRANSFER LOGS TO WATER, and FLOATING DOCK drawn by: K. Elmore	ACCESS RAMP & FLOAT DETAILS NO SCALE	MODIFICATION OF WHALE PASS LOG TRANSFER FACILITY SECTIONS 1 & 36, T66 & 67S, R79E, CRM PRINCE OF WALES ISLAND, S.E. ALASKA Sheet 9 of 10

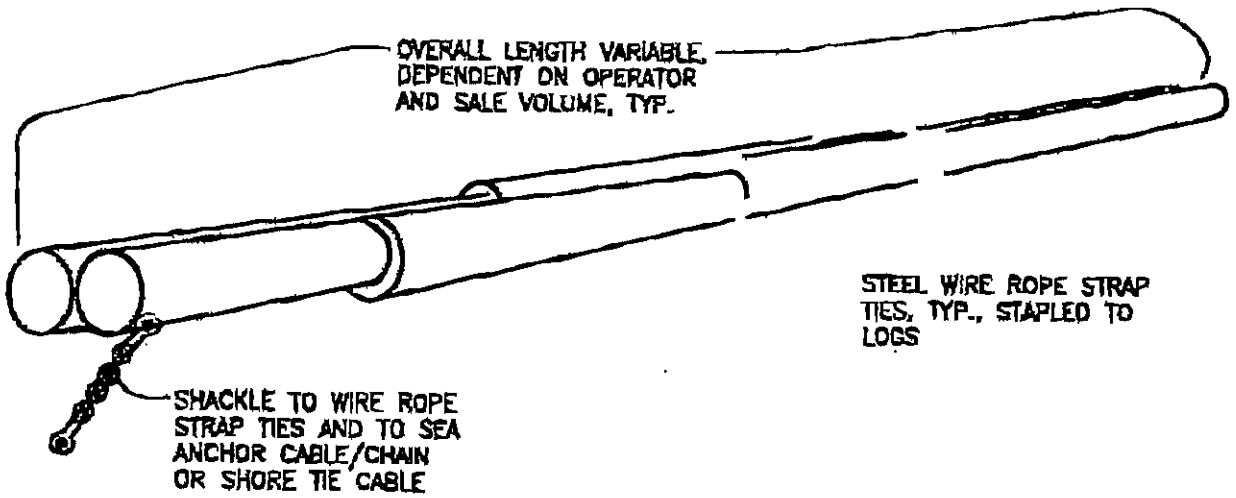

DOUBLE LOG STANDING BOOM

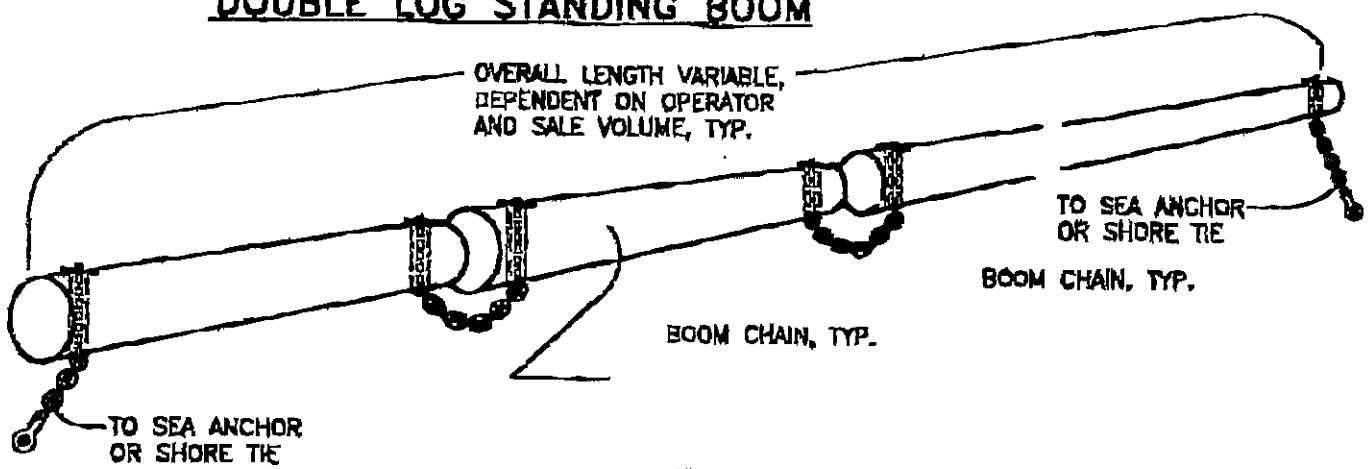

SINGLE LOG "BAG" BOOM

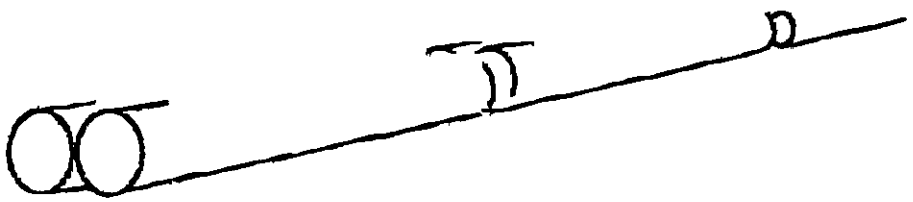

DOUBLE LOG STIFFLEG/LOG RAMP

NOTE:
TIMBER OPERATORS MAY USE ANY OR ALL OF THE TYPICAL BOOMS ILLUSTRATED, DEPENDENT ON THE OPERATOR'S EQUIPMENT AND/OR THE VOLUME OF TIMBER BEING HARVESTED. ALL THREE OF THE BOOMS ILLUSTRATED MAY BE TIED TO SHORE WITH WIRE ROPE OR CONNECTED TO SEA ANCHORS.

PURPOSE:	STANDARD LOG BOOMS TYPICAL DETAILS	MODIFICATION OF WHALE PASS LOG TRANSFER FACILITY
TRANSFER LOGS TO WATER, and FLOATING DOCK	NO SCALE	SECTIONS 1 & 36, T66 & 67S, R79E, CRM PRINCE OF WALES ISLAND, S.E. ALASKA
drawn by: K. Elmore		Sheet 10 of 10