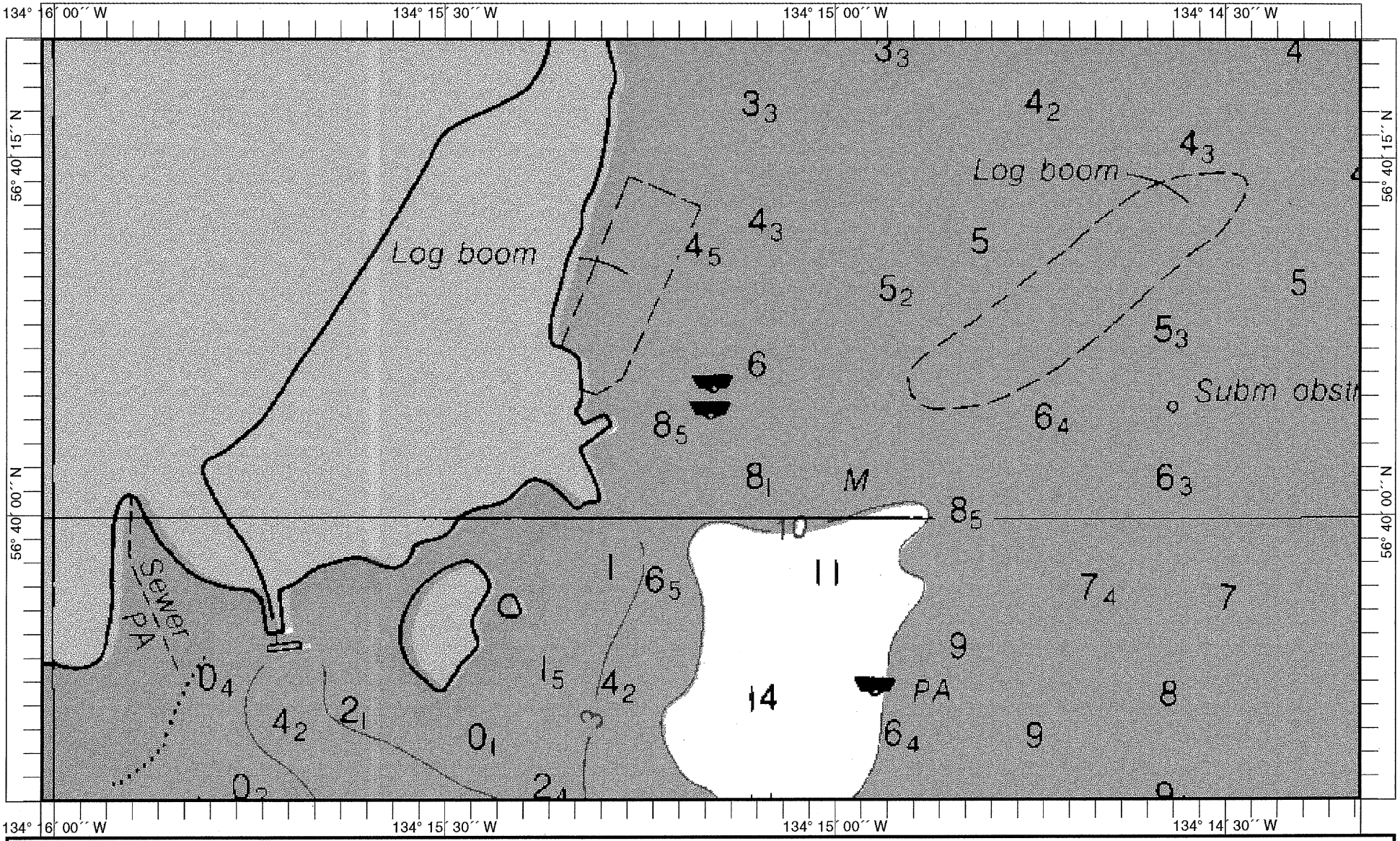

Chart Name: BAY OF PILLARS ROWAN AND WASHINGTON BAYS
Chart ID: 17370_1
Top Left: 56° 40′ 20″ N 134° 16′ 01″ W
Bottom Right: 56° 39′ 48″ N 134° 14′ 20″ W

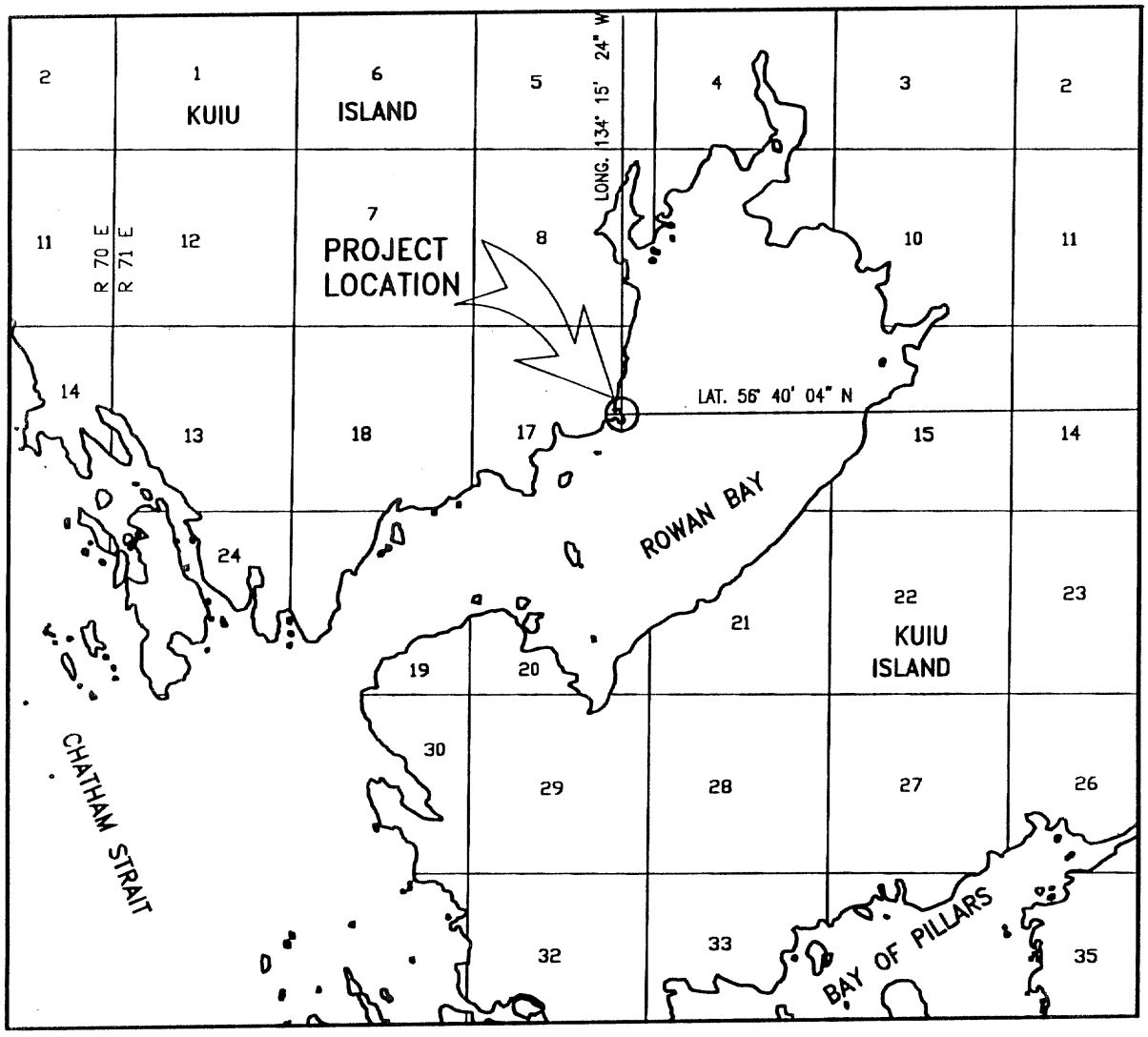

LEGEND

- STATE & PRIVATE LAND HOLDINGS
- LANDS MANAGED BY US FOREST SERVICE
- LTF — EXISTING LOG TRANSFER FACILITY
- 6541 — FOREST SERVICE ROAD NUMBER

VICINITY MAP: From USGS QUAD, Port Alexander C-1

N

SCALE, IN MILES

0 1 2

PART OF TOWNSHIPS T 60 S, RANGES R 70 E AND R 71 E, C.R.M.

DRAWN BY: K. ELMORE
DATE: 3/17/2000

DATE: 10-27-99	APPLICANT: M. Parker USDA Forest Service
ROWAN BAY LOG TRANSFER FACILITY VICINITY MAP	
ENVIRONMENTAL PROTECTION AGENCY NPDES PERMIT DRAWING	
SEC. 17, WITHIN T.60 S., R.71 E., CRM	
	SHEET 1 OF 3

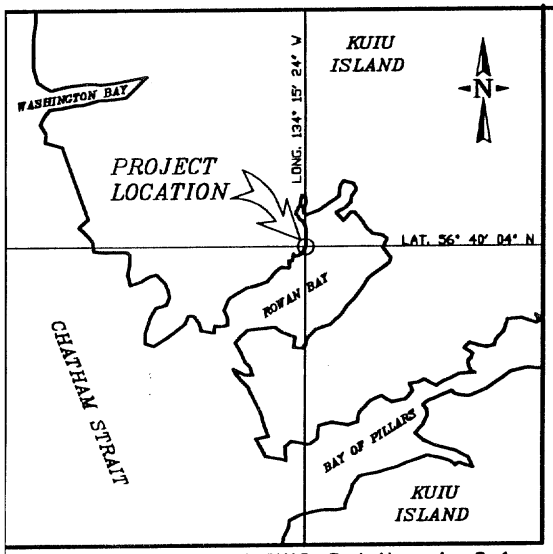

VICINITY MAP: From USGS QUAD, Port Alexander C-1

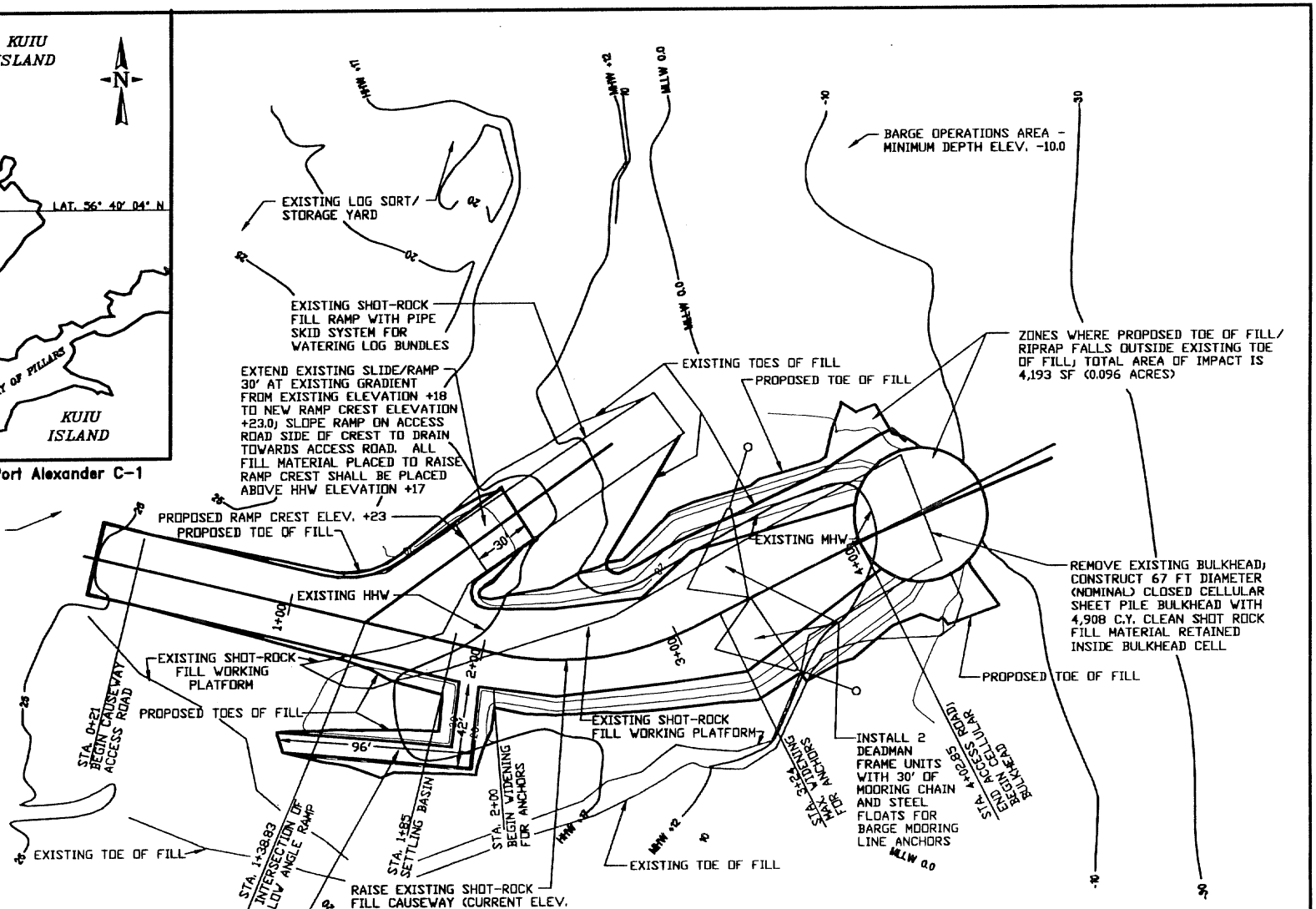

ROWAN BAY LTF
SITE PLAN
SCALE IN FEET
0 10 20 40

PROJECT PURPOSE: REPLACEMENT OF EXISTING "HALF-TIDE" EQUIPMENT BULKHEAD WITH "ALL-TIDE" BULKHEAD CAPABLE OF DIRECT TRANSFER OF LOGS FROM LAND TO BARGE.

BASIS OF ELEVATION:

PROJECT DATUM MLLW ELEVATION 0.0
INTERPOLATION BETWEEN USC&GS VERTICAL CONTROL STATIONS AT MARY FRANCES ANCHORAGE (TEBENKOF BAY) AND SAGINAW BAY ON KUIU ISLAND
INTERPOLATED TIDAL ELEVATIONS ARE:

HIGHEST TIDE:	17.0 FT. (+/- 0.5 FT.)
MEAN HIGHER HIGH WATER:	12.9 FT.
MEAN HIGH WATER:	12.0 FT.
HALF TIDE LEVEL:	6.8 FT.
MEAN LOW WATER:	1.5 FT.
MEAN LOWER LOW WATER:	0.0 FT. (DATUM)
LOWEST TIDE:	-4.0 FT. (+/- 0.5 FT.)

ADJACENT LANDOWNERS:

TIDELANDS: STATE OF ALASKA
UPLANDS: ALL UPLANDS ON KUIU ISLAND MANAGED BY U.S. FOREST SERVICE

DATE: 09-08-2000	APPLICANT: M. Parker USDA Forest Service

ROWAN BAY LOG TRANSFER FACILITY

ENVIRONMENTAL PROTECTION AGENCY NPDES GENERAL PERMIT

SEC. 17, WITHIN T. 60 S., R. 71 E., CRM

SHEET 2 OF 3

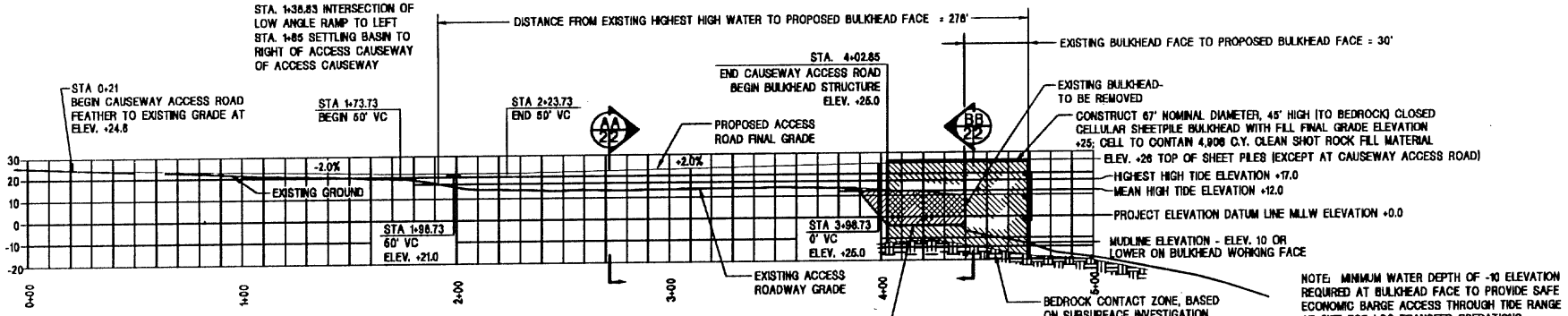

ACCESS ROAD/BULKHEAD PROFILE VIEW

0 5 10 20

SCALE IN FEET
HORIZONTAL AND VERTICAL

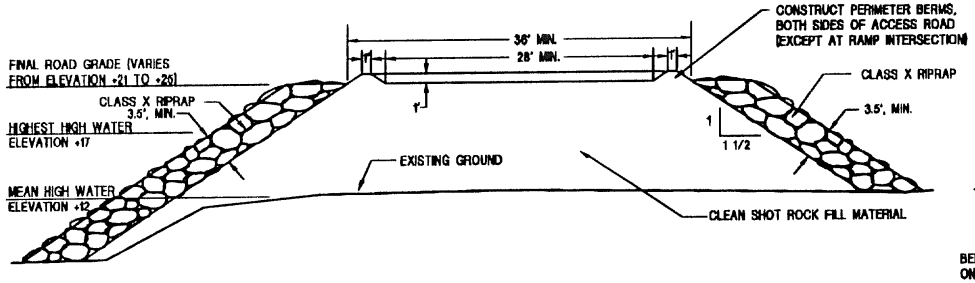

AA 22 TYPICAL ACCESS ROADWAY SECTION

NO SCALE

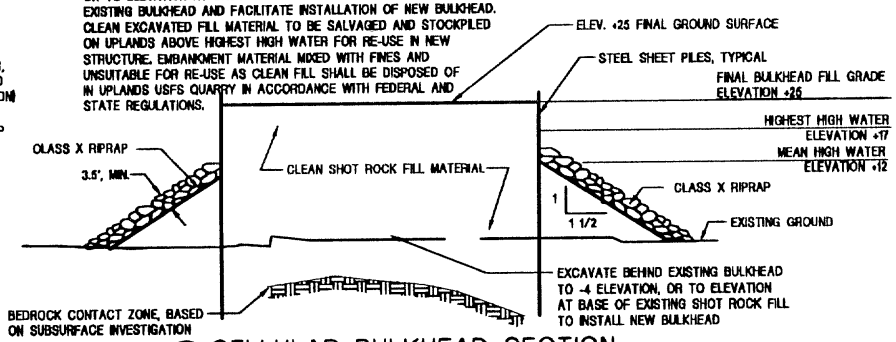

BB 22 CELLULAR BULKHEAD SECTION

NO SCALE

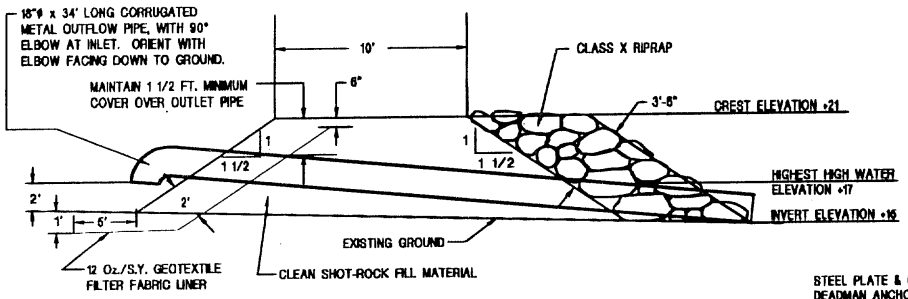

CONTAINMENT DIKE SECTION/OUTLET PIPE DETAILS

NO SCALE

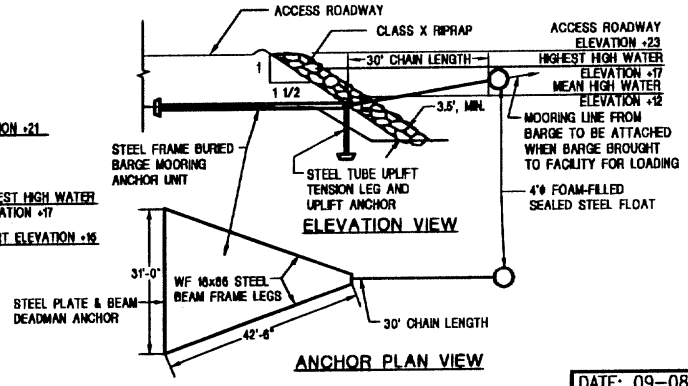

MOORING ANCHOR UNITS DETAILS

NO SCALE

PROJECT IMPACTS IN TIDEWATERS:

BULKHEAD:
67' (NOMINAL) CELLULAR SHEET PILE BULKHEAD WITH TOTAL RETAINED FILL VOLUME OF 4,908 C.Y., WITH:
VOLUME PLACED BELOW HIGHEST HIGH WATER: 3,875 C.Y.
VOLUME PLACED BELOW MHW: 3,229 C.Y.

ACCESS ROAD:
6,702 C.Y. TOTAL EMBANKMENT FILL, AND 1,830 C.Y. TOTAL RIPRAP, WITH:
VOLUMES PLACED BELOW HIGHEST HIGH WATER: 4,119 C.Y. EMBANKMENT, AND 1,048 C.Y. RIPRAP
VOLUMES PLACED BELOW MEAN HIGH WATER: 2,894 C.Y. EMBANKMENT, AND 498 C.Y. OF RIPRAP.

CONTAINMENT DIKE:
274 C.Y. TOTAL EMBANKMENT FILL, AND 101 C.Y. TOTAL RIPRAP; WITH 52 C.Y. EMBANKMENT FILL AND 11 C.Y. RIPRAP PLACED BELOW HIGHEST HIGH WATER. NO VOLUMES PLACED BELOW MHW FOR CONTAINMENT DIKE.

ALL FILL MATERIAL TO BE CLEAN SHOT ROCK EXCAVATED FROM USFS UPLANDS ROCK QUARRIES OR SALVAGED FROM EXISTING BULKHEAD REMOVAL OPERATIONS.

DATE: 09-08-2000	APPLICANT: M. Parker USDA Forest Service

ROWAN BAY LOG TRANSFER FACILITY

ENVIRONMENTAL PROTECTION AGENCY NPDES GENERAL PERMIT

SEC. 17, WITHIN T. 60 S., R. 71 E., CRM

SHEET 3 OF 3

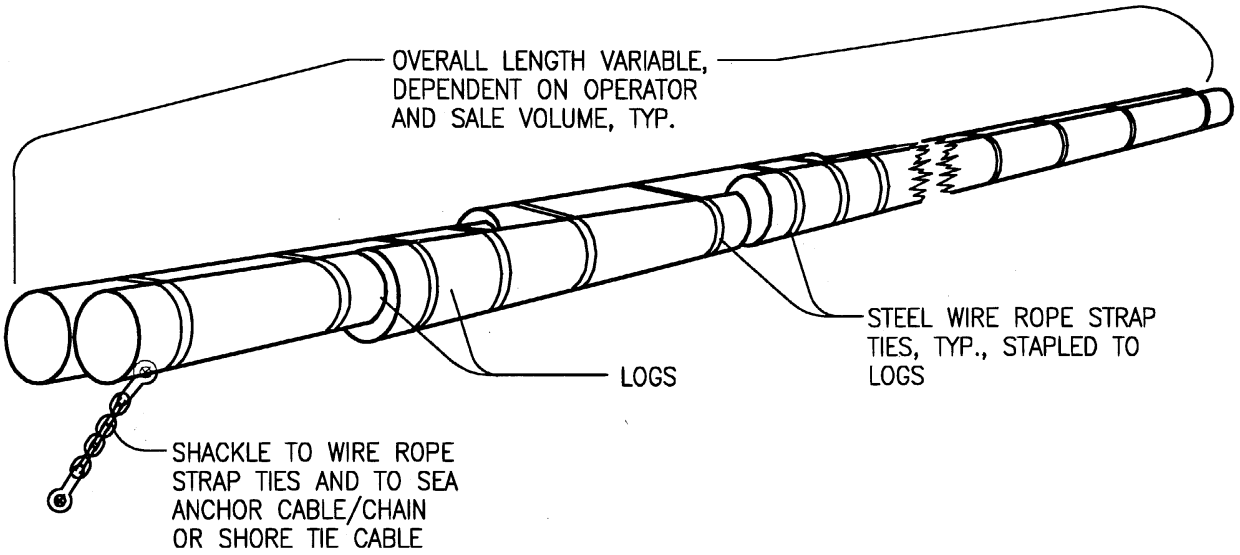

DOUBLE LOG STANDING BOOM

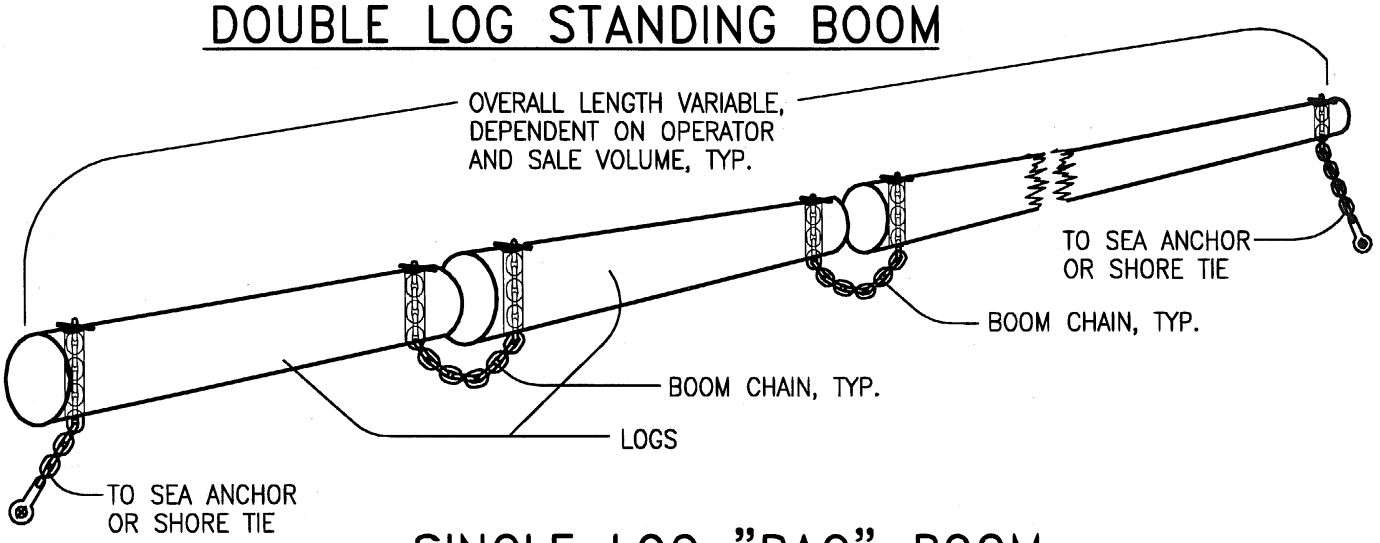

SINGLE LOG "BAG" BOOM

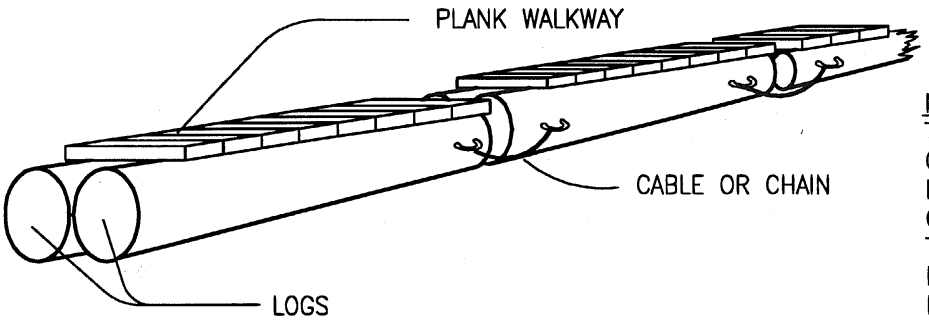

DOUBLE LOG STIFFLEG

NOTE:
TIMBER OPERATORS MAY USE ANY OR ALL OF THE TYPICAL BOOMS ILLUSTRATED, DEPENDENT ON THE OPERATOR'S EQUIPMENT AND/OR THE VOLUME OF TIMBER BEING HARVESTED. ALL THREE OF THE BOOMS ILLUSTRATED MAY BE TIED TO SHORE WITH WIRE ROPE OR CONNECTED TO SEA ANCHORS.

PURPOSE: CONTAINMENT OF LOGS TRANSFERRED TO WATER AND LOG RAFT MAKE-UP	STANDARD LOG BOOMS TYPICAL DETAILS	DATE: 06-06-2001	APPLICANT: M. Parker USDA Forest Service
		ROWAN BAY LOG TRANSFER FACILITY	
		ENVIRONMENTAL PROTECTION AGENCY NPDES GENERAL PERMIT	
	NO SCALE DRAWN BY: K. ELMORE	SEC. 17, WITHIN T. 60 S., R. 71 E., CRM	
			SHEET 2 OF 2

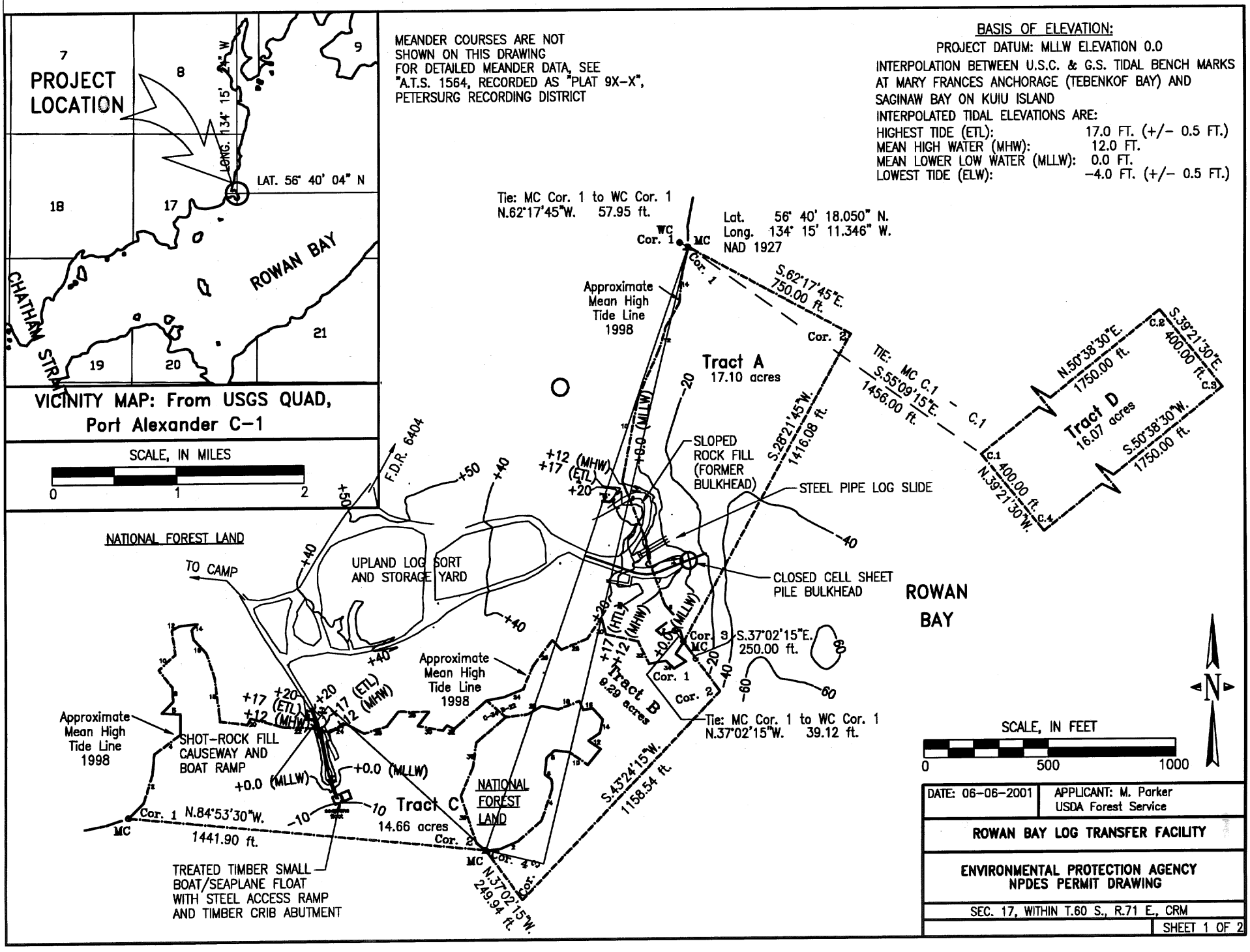
PROJECT LOCATION
LONG. 134° 15' 24" W.
LAT. 56° 40' 04" N
ROWAN BAY
CHATHAM STRAIT
VICINITY MAP: From USGS QUAD, Port Alexander C-1
SCALE, IN MILES
0 1 2
MEANDER COURSES ARE NOT SHOWN ON THIS DRAWING
FOR DETAILED MEANDER DATA, SEE "A.T.S. 1564, RECORDED AS "PLAT 9X-X", PETERSURG RECORDING DISTRICT
BASIS OF ELEVATION:
PROJECT DATUM: MLLW ELEVATION 0.0
INTERPOLATION BETWEEN U.S.C. & G.S. TIDAL BENCH MARKS AT MARY FRANCES ANCHORAGE (TEBENKOF BAY) AND SAGINAW BAY ON KUIU ISLAND
INTERPOLATED TIDAL ELEVATIONS ARE:
HIGHEST TIDE (ETL): 17.0 FT. (+/- 0.5 FT.)
MEAN HIGH WATER (MHW): 12.0 FT.
MEAN LOWER LOW WATER (MLLW): 0.0 FT.
LOWEST TIDE (ELW): -4.0 FT. (+/- 0.5 FT.)
Tie: MC Cor. 1 to WC Cor. 1
N.62°17'45"W. 57.95 ft.
Lat. 56° 40' 18.050" N.
Long. 134° 15' 11.346" W.
NAD 1927
S.62°17'45"E. 750.00 ft.
TIE: MC C.1 - C.1
S.55°09'15"E. 1456.00 ft.
S.28°21'45"W. 1416.08 ft.
Tract A
17.10 acres
Approximate Mean High Tide Line 1998
SLOPED ROCK FILL (FORMER BULKHEAD)
STEEL PIPE LOG SLIDE
CLOSED CELL SHEET PILE BULKHEAD
ROWAN BAY
Tract D
16.07 acres
N.50°38'30"E. 1750.00 ft.
S.39°21'30"E. 400.00 ft.
S.50°38'30"W. 1750.00 ft.
N.39°21'30"W. 400.00 ft.
Tract B
9.29 acres
S.37°02'15"E. 250.00 ft.
Tie: MC Cor. 1 to WC Cor. 1
N.37°02'15"W. 39.12 ft.
S.43°24'15"W. 1158.54 ft.
N.37°02'15"W. 249.94 ft.
NATIONAL FOREST LAND
TO CAMP
UPLAND LOG SORT AND STORAGE YARD
F.D.R. 6404
Approximate Mean High Tide Line 1998
SHOT-ROCK FILL CAUSEWAY AND BOAT RAMP
+0.0 (MLLW)
Tract C
14.66 acres
N.84°53'30"W. 1441.90 ft.
TREATED TIMBER SMALL BOAT/SEAPLANE FLOAT WITH STEEL ACCESS RAMP AND TIMBER CRIB ABUTMENT
SCALE, IN FEET
0 500 1000
N
DATE: 06-06-2001
APPLICANT: M. Parker
USDA Forest Service
ROWAN BAY LOG TRANSFER FACILITY
ENVIRONMENTAL PROTECTION AGENCY
NPDES PERMIT DRAWING
SEC. 17, WITHIN T.60 S., R.71 E., CRM
SHEET 1 OF 2