Notification

0043

To be covered under the General NPDES Permit AK-G70-0000 for Log Transfer Facilities in Alaska

(see Part V of the permit)

Submission of this document constitutes a request that certain discharges into waters of the United States resulting from the operation of the log transfer facility identified herein be authorized under General NPDES Permit AK-G70-0000.

Previously Assigned NPDES Permit No. (if applicable):	NPDES Permit No. AK-G70-0_____ (to be assigned by EPA)

Landowner Information

Landowner Name: USDA Forest Service Alaska Region Tongass National Forest

Address: 648 Mission Street, Federal Building Ketchikan, AK 99901	Phone: (907) 228-6200 FAX: (907) 228-6292

Representative: THOMAS PUCHLERZ

Operator Information

Company Name: Ketchikan Pulp Company

Address: P.O. Box 6600 Ketchikan, AK 99901	Phone: (907) 228-2259 FAX: (907) 225-8260

Representative: Owen Graham

Facility Information

Section 404 Permit No., Facility Name on Permit, and Issuance Date: NPA 73-160, Fire Cove, 10/17/1974

Waterway Name: Neets Bay 8

Facility Name: Fire Cove

Address: Sec. 25, T.70S., R.90E., C.R.M.	Phone: N/A FAX: N/A

Latitude/Longitude: 55° 46' 27" N / 131° 33' 16"

Distance/Direction to nearest town/city: 30.4 miles North of Ketchikan, AK.

Attachments: [X] Nautical Chart [X] Vicinity Map [X] Plan Drawing [X] Elevation/Cross Section View

Description of operations: Facility is designed to have log bundles placed into the water by equipment (Double A-Frame or Crane) lifting log bundles off log trucks, then lowering bundles into the water with bundles resting on slide rails while machine retards velocity of bundles. Once bundles are floating, they would be moved to operator's log rafting pens by small boat. Timber operator would have to maintain a log rafting area near the Log Transfer Facility (LTF). A moderate amount of onshore log storage is available adjacent to the LTF. Additional log bundles will have to be stored at a remote uplands location, and transported to the LTF just prior to being transferred to water or barge.

Direct loading of barges from this LTF is considered fair, due to the shallow depth of water directly adjacent to the rock face. Barge loading at this facility is limited to barges equipped with loading gates, where bundle carrying equipment drives from the sort/storage area to the ramp gate and then onto the loading gate and then to the barge. There is a potential for barges grounding out on lower tides or when the barge draft increases due to the weight of the loaded log bundles. Barges will need to be shifted with the tides to keep the ramp gate in contact with the rock fill.

Demonstration that operations constitute important or social or economic development in the area and that a zone of deposit is necessary to accommodate operation of the LTF: The purpose and need for the operation of the LTF is to implement the direction in the Tongass Land and Resource Management Plan, seek to meet market demand as prescribed in the Tongass Timber Reform Act (1990), to contribute to providing a sustained volume of wood to meet local and national demand, and to provide local and regional employment opportunities.

The movement of logs from uplands to the water, whether for in-water activities or barging, creates bark deposition at all log transfer facilities. The extent of the deposit is determined by the amount of timber volume crossing the facility, the frequency of projects utilizing the site, the tidal characteristics immediately adjacent to the LTF, and the methods utilized in transferring logs. The site selected for this LTF facilitates the movement of logs while impacting the least amount of saltwater habitat.

Describe known existing uses of the receiving water where the LTF is located, and demonstrate that those uses will be fully protected by the proposed operation of the LTF:

Some commercial and sport fishing occur in this area. The bay is also used for an anchorage by vessels to wait out storms.

None of the waterway uses identified above should be hindered by the continued operation and use of the LTF. All reasonable practices will be implemented to avoid the discharge of bark, wood debris, and other pollutants to the receiving waters, and to contain the discharge to the smallest area that is practicable and is consistent with the safe and orderly operation of the LTF.

Facility Classification

Category: [X] Shore-based [ ] Off-shore	Method of Log Transfer: Double A Frame or Crane liftoff/lowering over Sloped Rock Fill

Use Description (Type I, II, III, IV or V): IV

Production Data

Expected facility lifespan: 30 to 40 years, with periodic maintenance of fill and riprap	Projected Months of Operation: April through October

Volume to be transferred (board feet, Scribner scale)

Maximum over life of permit:	10
Average per year:	2
Maximum per year:	10
Approximate volume of timber (mmbf) previously transferred over the facility, if known:	140

Receiving Water Information

ATTACHMENTS (for Type I-IV shore-based LTFs)

[X] Bark monitoring surveys not previously submitted to EPA

Signature and Certification

I certify under penalty of law that this document and all attachments were prepared under my direction or supervision in accordance with a system designed to assure that qualified personnel properly gather and evaluate the information submitted. Based on my inquiry of the person or persons who manage the system or those persons directly responsible for gathering the information, the information submitted is, to the best of my knowledge and belief, true, accurate and complete. I am aware that there are significant penalties for submitting false information, including the possibility of fine and imprisonment for knowing violations

Signature of Principal Corporate or Executive Officer/General Proprietor Thomas Puchlerz	Printed Name Paul W. Forward
Title/Company Acting Regional Forester/ USDA Forest Service Alaska Region	Date September 7, 2001

Submit this Notice of Intent to:

U.S. Environmental Protection Agency Region 10 1200 Sixth Avenue, OW-130 Seattle, Washington 98101 Attn: LTF Reporting	Alaska Dept. of Environmental Conservation Division of Air and Water Quality 410 Willoughby Avenue, Suite 105 Juneau, AK 99801 Attention: LTF Reporting

Qualified applicants will be authorized to discharge under this general NPDES permit upon receipt of written authorization from EPA.

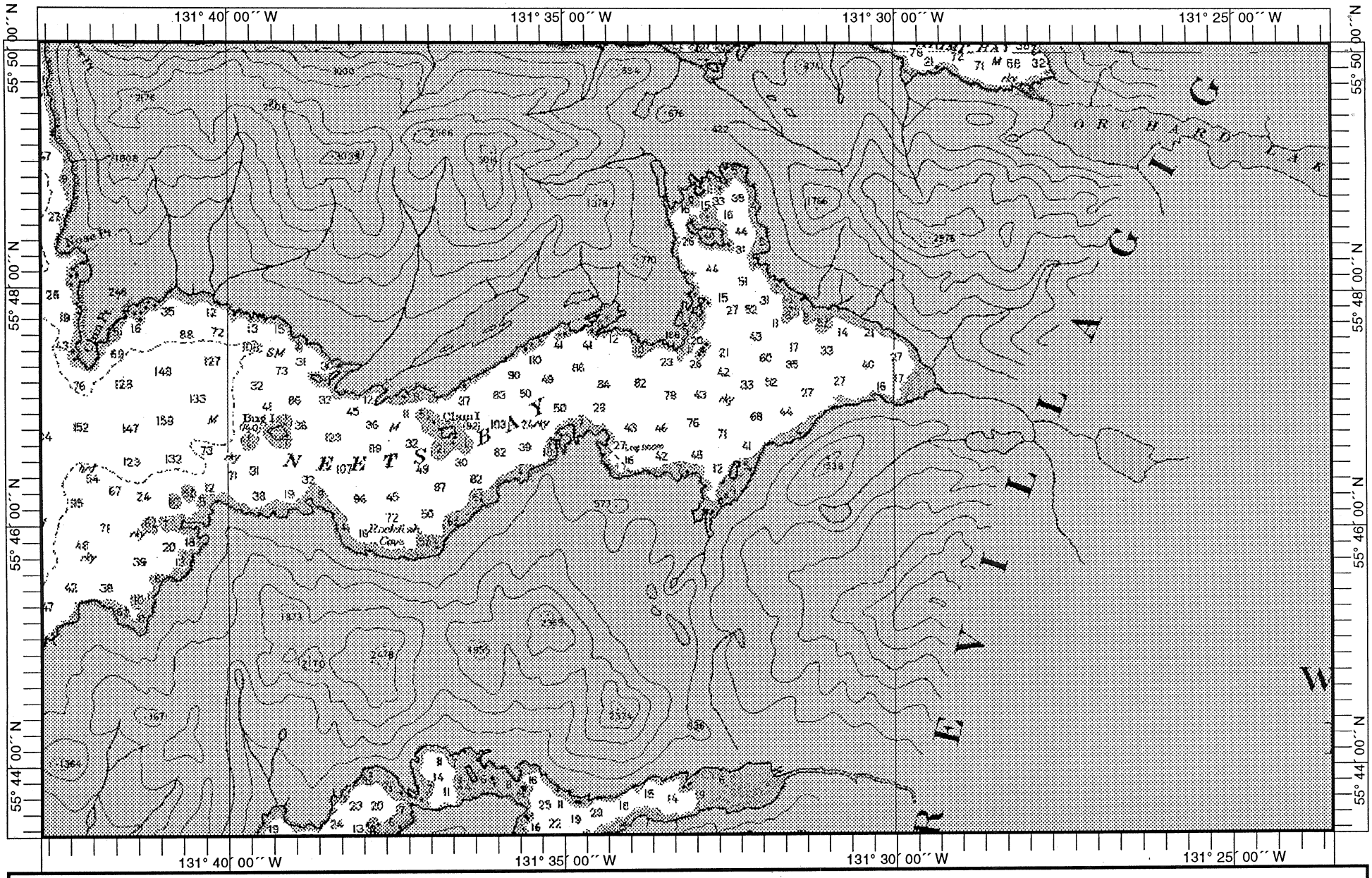

Chart Name: WESTERN PART OF BEHM CANAL
Chart ID: 17422_1
Top Left: 55° 50′ 05″ N 131° 42′ 47″ W
Bottom Right: 55° 43′ 25″ N 131° 23′ 31″ W

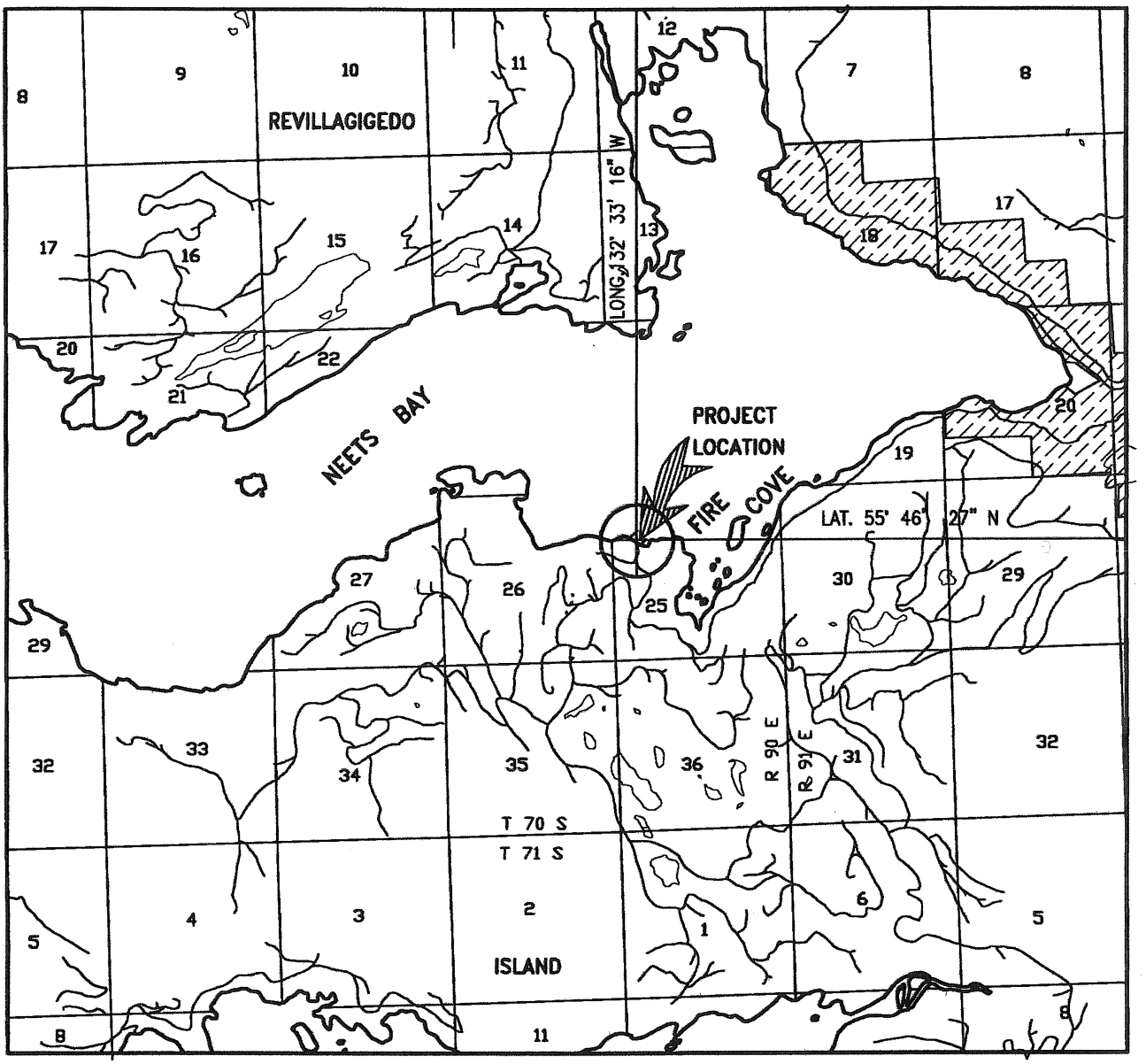

VICINITY MAP: From USGS QUAD, Petersburg B-5

SCALE, IN MILES

0 1 2

PART OF TOWNSHIPS T 70 S AND T 71 S,
RANGES R 90 E AND R 91 E, C.R.M.

LEGEND

- STATE & PRIVATE LAND HOLDINGS
- LANDS MANAGED BY US FOREST SERVICE
- LTF — EXISTING LOG TRANSFER FACILITY
- 6541 — FOREST SERVICE ROAD NUMBER

DRAWN BY: K. ELMORE
DATE: 8/8/2001

DATE: 8-8-2001	APPLICANT: M. Parker USDA Forest Service
FIRE COVE LOG TRANSFER FACILITY	
ENVIRONMENTAL PROTECTION AGENCY NPDES GENERAL PERMIT	
SEC. 25 & 26, WITHIN T. 70 S., R. 90E., CRM	
	SHEET 1 OF 1

MEANDER COURSE DATA ARE NOT SHOWN ON THIS DRAWING
FOR DETAILED MEANDER COURSE DATA, SEE "A.D.L. 101551, FILED WITH THE KETCHIKAN RECORDING DISTRICT

NEETS BAY
EBB
FLOOD

N 63° 45' 42" W
1176.19 Ft.
S 16° 04' 56" W
747.24Ft.
N 25° 03' 04" W
507.76 Ft.

LOG RAFT MAKE-UP AREA
300.0 Ft.
800.0 Ft.
800.0 Ft.
300.0 Ft.

TIDELAND LEASE – A.D.L. 101551
PARCEL 2 – PROJECT AREA –
20.7 ACRES

RAMP
DOCK
UNLOAD/WORK AREA
DITCH
FORMER LOG BULKHEAD LOCATION
ROAD

+21.0 (ETL)
+15.2 (MHW)
+0.0 (MLLW)
+22.0 (ETL)
+15.2 (MHW)
+0.0 (MLLW)

PLAN VIEW

BASIS OF ELEVATION:
U.S.C.& G.S. CAP
"SHRIMP BAY"
(LOCATED IN SHRIMP BAY, REVILLAGIGEDO ISLAND

ESTIMATED HIGHEST WATER (HTL):	+21.0 FT.
MEAN HIGH WATER (MHW):	+15.0 FT.
MEAN LOWER LOW WATER (MLLW):	0.0 FT.

LEGEND
STATE & PRIVATE LAND HOLDINGS

VICINITY MAP: From USGS QUAD, Ketchikan D-5

SCALE, IN MILES
0 1 2

REVILLAGIGEDO
NEETS BAY
PROJECT LOCATION
FIRE COVE
ISLAND
LONG.131° 33' 16" W
LAT. 55° 46' 27" N
R 90 E
R 91 E

SCALE, IN FEET
0 100 200 400

DRAWN BY: K. Elmore

DATE: 08-01-2001	APPLICANT: M. Parker USDA Forest Service
FIRE COVE LOG TRANSFER FACILITY	
ENVIRONMENTAL PROTECTION AGENCY NPDES GENERAL PERMIT	
SEC. 25 & 26, WITHIN T. 70 S., R. 90 E., CRM	
	SHEET 1 OF 2

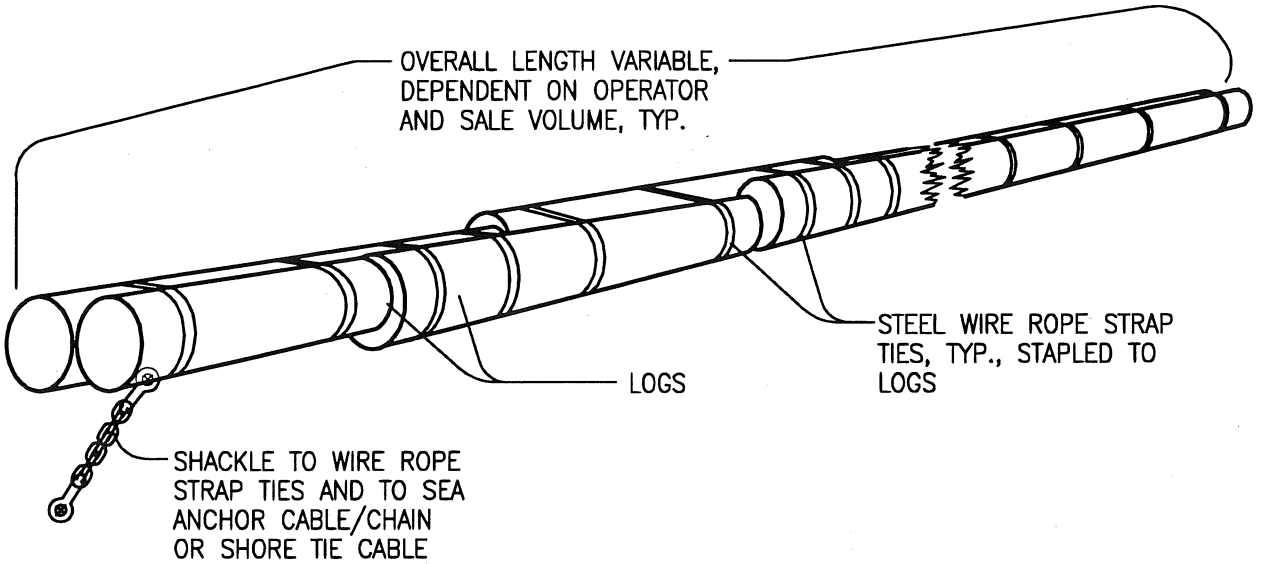

DOUBLE LOG STANDING BOOM

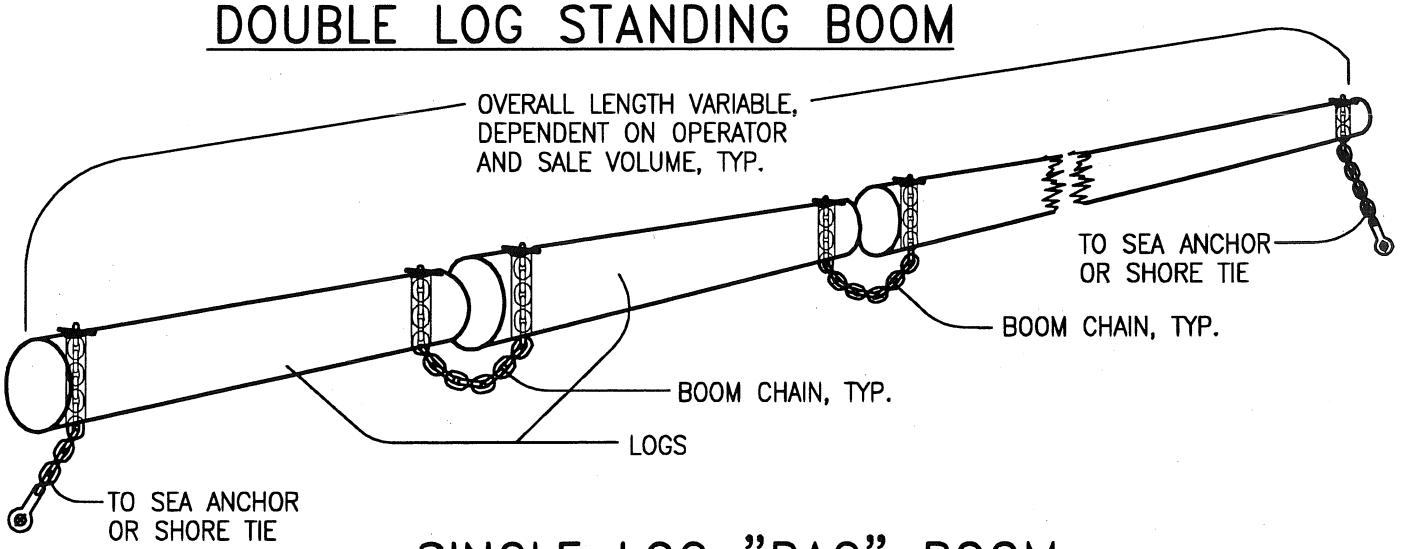

SINGLE LOG "BAG" BOOM

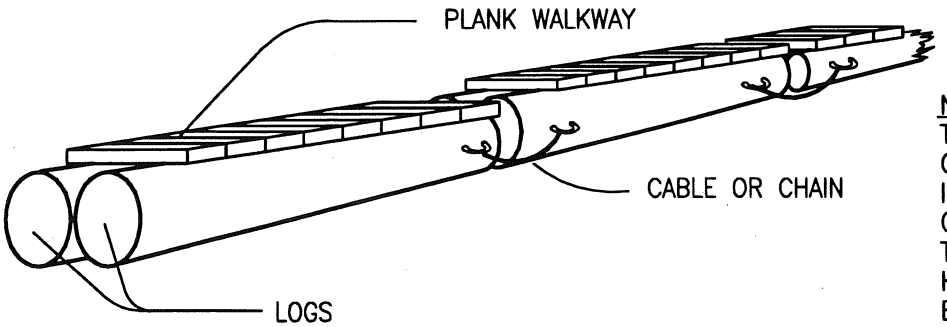

DOUBLE LOG STIFFLEG

NOTE:
TIMBER OPERATORS MAY USE ANY OR ALL OF THE TYPICAL BOOMS ILLUSTRATED, DEPENDENT ON THE OPERATOR'S EQUIPMENT AND/OR THE VOLUME OF TIMBER BEING HARVESTED. ALL THREE OF THE BOOMS ILLUSTRATED MAY BE TIED TO SHORE WITH WIRE ROPE OR CONNECTED TO SEA ANCHORS.

PURPOSE: CONTAINMENT OF LOGS TRANSFERRED TO WATER AND LOG RAFT MAKE-UP drawn by: K. Elmore	STANDARD LOG BOOMS TYPICAL DETAILS NO SCALE	DATE: 08-10-2001 APPLICANT: M. Parker, USDA Forest Service FIRE COVE LOG TRANSFER FACILITY ENVIRONMENTAL PROTECTION AGENCY NPDES GENERAL PERMIT SEC. 25 & 26, WITHIN T. 70 S., R. 90 E., CRM SHEET 2 OF 2

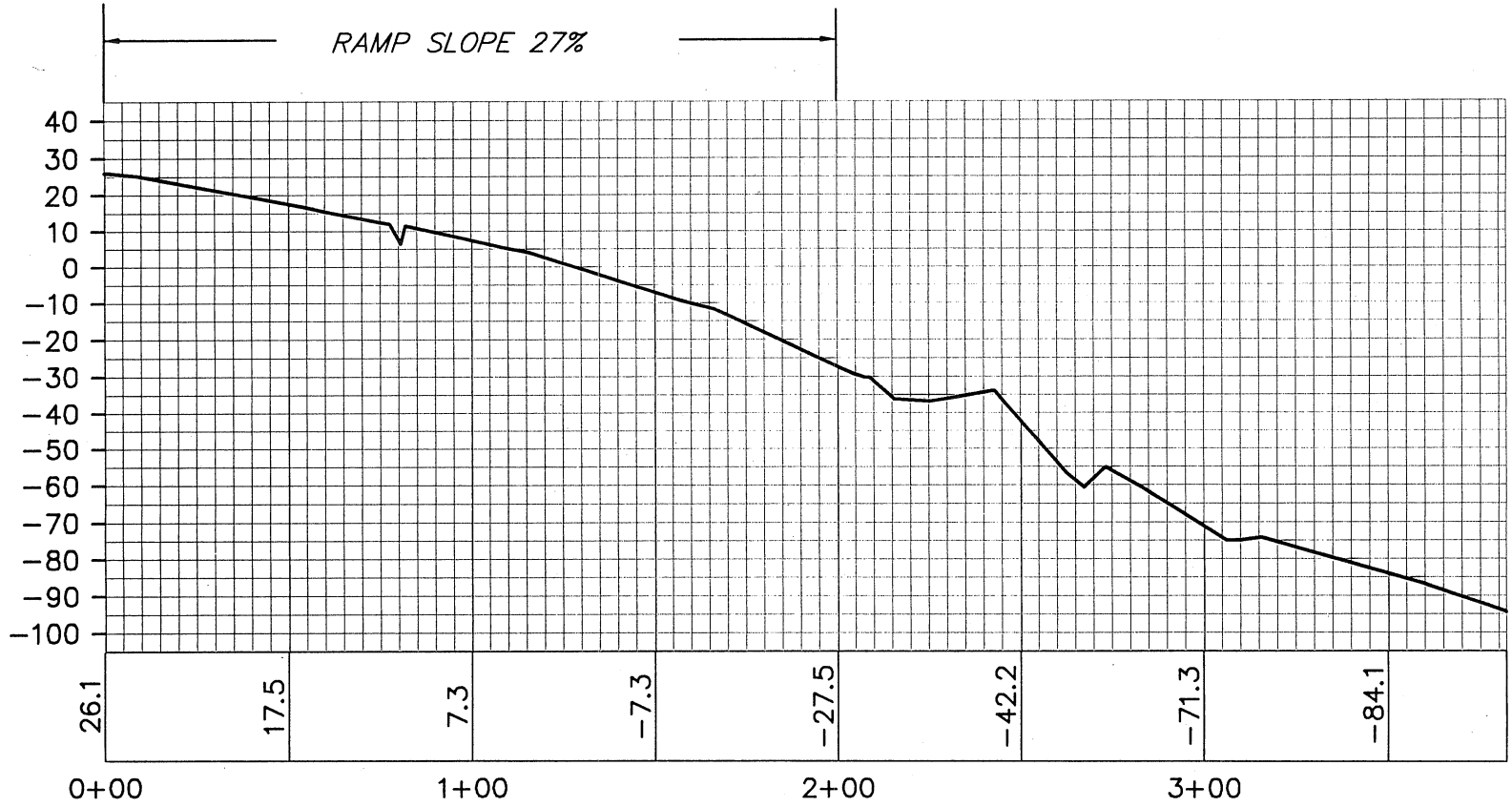

PROFILE HORIZONTAL AND VERTICAL SCALE 1"=50'

U. S. FOREST SERVICE

FIRE COVE
LOG TRANSFER FACILITY

REVILLAGIGEDO ISLAND, ALASKA

URS

JOB NO:	74-FFS00033.00	DRAWN:	MRC
DATE:	MAY 25, 2001	FILE:	FIRECOVE.DWG

SHEET 2 OF 2

Worksheet #13 NPDES Pollution Prevention Plan Certification and Re-certification	
Facility: Fire Cove	
CERTIFICATION BY THE APPLICANT	
I, Paul W. Forward (responsible corporate official), certify under penalty of law that this document and all attachments were prepared under my direction or supervision in accordance with a system designed to assure that qualified personnel properly gather and evaluate the information submitted. Based on my inquiry of the person or persons who manage the system or those persons directly responsible for gathering the information, the information submitted is, to the best of my knowledge and belief, true, accurate, and complete. I am aware that there are significant penalties for submitting false information, including the possibility of fine and imprisonment for knowing violations.	
Name & Official Title (type or print) For Paul W. Forward Acting Regional Forester	Area Code and Telephone No. (907) 228-6200
Signature	Date Signed 09/06/2001
RE-CERTIFICATION BY APPLICANT	
Name & Official Title (type or print)	Area Code and Telephone No.
Signature	Date Signed
Name & Official Title (type or print)	Area Code and Telephone No.
Signature	Date Signed
Name & Official Title (type or print)	Area Code and Telephone No.
Signature	Date Signed
Name & Official Title (type or print)	Area Code and Telephone No.
Signature	Date Signed