# Logistics and considerations of installation and operation of AWTS

## Alaska Cruise ship waste water science advisory panel

October 2010

# Expected outcome and contents

- How to compare information to evaluate feasibility and make recommendations
- Contents:
  - Marine waste water treatment industry
    - Some History
    - Other Environmental rules affecting AWP's
  - Retrofit AWP project
    - Sizing the process + Cruise ship waste water sources & qualities
    - Process space  reservation and components
    - Installation
    - Operation
  - New Alaska rules
    - How to move forward ?

# Why do people take the Cruise ?

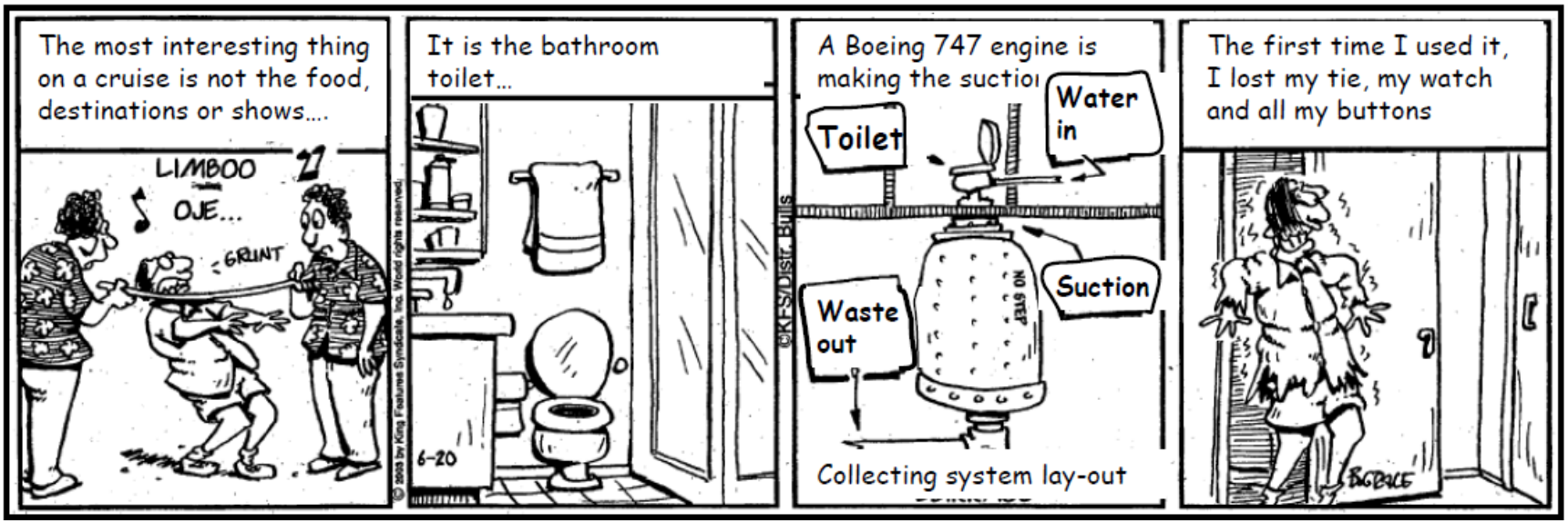

# Some AWP history…Late 90's

- All ships were built to meet USCG and IMO Marpol Annex IV standards
  - Black water treated in biological or physical/chemical MSD's
  - Limited holding capacities and extended holding lead quickly to anoxic conditions
  - Grey water normally directly overboard
- Marine industry had no knowledge on what was going in and what was coming out of the MSD's
  - "No mechanical alarm" meant MSD was working properly

# Years 2000 - 2005

- Cruise operators started quickly to adapt to new Alaska rules
  - Cruise operators selected a AWP supplier without any water treatment knowledge and AWP suppliers sold systems without ship waste knowledge
    - HAL => Zenon
    - NCL => Scanship
    - CCL => Rochem, Pall, Hamworthy
    - RCCL => Hydroxyl, Zenon
    - Disney => MEP
- Lots of operational issues
  - Sizing data was badly underestimated
  - Pumps and components not made for shipboard use
  - Crews were not educated to operate the systems and support was missing

# 2005-2010

- Companies (operators/suppliers) lost money:
  - delays on installations
  - operational issues had to be corrected
  - fierce competition on only few orders
    - Scanship, Hydroxyl, MEP, Navalis => Chapter 11
    - Pall, Zenon/GE, Rochem => out or not active anymore
- Operator knowledge improved and old AWP's are now in "acceptable condition"

  - Only few treating 100% all streams 24/7
- Various treatment experiences led to different internal policies among the Cruise lines

# AWP situation today

- Cruise companies still dream on simple, small, no cost, on/off systems, but:
  - Have accepted that AWP's are what they are and that the systems need some "love and care"
  - Admit that the "wet side" is now under control to meet current Alaska standards
  - Issues mainly on:
    - Pre-screens, smell, sludge management & operational cost
    - Future rules and decisions what really to treat !

# Other future environmental laws affecting the AWP

- Ballast water treatment
  - Capacity on Cruise ship 150-300m3/h
  - Seldomly used…Do we really need this?
  - 5-10m2 space, cost 250-350 TUSD/each +inst.
  - Currently shared treated waste water holding and Ballast tanks on older Cruise ships !!
- SECA SOx exhaust gas issues / MGO
  - Dual fuel need tankage space.
  - Is Scrubber allowed at ports and what to do with scrubber waste water streams and sludge?

# IMO MEPC 61/7 Baltic sea

- Nutrient removal for sewage
  - The nutrient concentrations of the samples of effluent without dilution should be:
    - total nitrogen < 20 mg/*l or at least 70% reduction*
    - total phosphorus < 1.0 mg/*l or at least 80% reduction*
- Related to the proposed nutrient standards, it is proposed that the term "influent" should be defined as follows: "Influent means the total flow into the sewage treatment process". The reason for this addition is that, although influent containing grey water mixed with sewage is not considered dilution.
- The Government of each Party to the Convention undertakes to ensure that within a special area reception facilities in all relevant ports and terminals are provided for the reception of sewage.

# Waste water treatment process

*Wastewater treatment means removal of contaminants by various separation and oxidation processes to produce clean water*

# Design of a waste treatment process

## 1. Knowledge of influent / effluent parameters:

- Flow parameters and patterns => **Peak flow control!**
- Variation of concetrations => **Organic peak flow control!**
- Process risks, e.g. toxic substances
- Effluent limits

## 2. Hydraulic design of the process:

- Equalizing/holding/redundancy expectations
- Hydraulic Retention Time (HRT) of the process
- Design flux for membranes/DAF/UV etc. various process steps

# Design of a waste treatment process

## 3. Organic design of the process:

- Prefiltration rate
- Mixed Liquor Suspended Solids (MLSS), Sludge Loading Rate (F/M),
- Sludge age etc. various sizing parameters according selected process

## 4. Supporting processes

- Sludge management
  - Holding, dewatering, drying and/or incenerating
- Effluent holding and discharge
  - Discharge time and UV disinfection demand

# Waste water soures

## Questions raised on a retrofit project:

- How are the water streams collected?
- Transfer pump controls?
- Who controls the interfaces?
- Are the streams mixed or on separate tanks?

How much hydraulic and organic peaks are expected => How do we handle those in the AWP

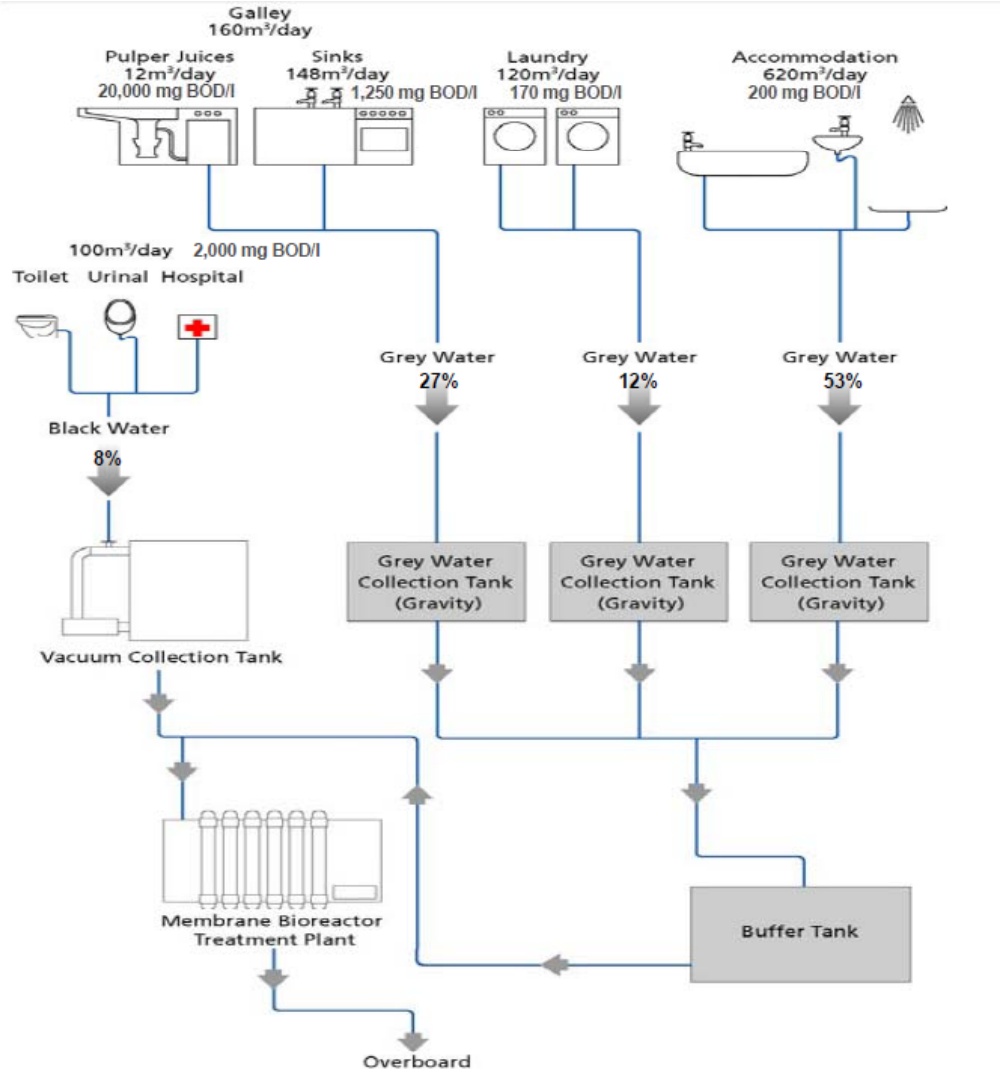

# Full sea day versus 10% empty 10 port day

**Sewage treatment plant load calculator - Cruise ship**

| | |
|---|---|
| Number of crew | 1000 |
| Number of passangers | 2300 |

**Treated wastewater characteristics**

| | Y/N | l/p/d | gBOD/d | mg/l |
|---|---|---|---|---|
| Black water vacuum | 1 | 20 | 45 | 2250 |
| Black water gravity | 0 | 70 | 45 | 0 |
| Accommodation graywater | 1 | 150 | 20 | 133 |
| Galley water | 1 | 50 | 125 | 2500 |
| Laundry water | 1 | 25 | 5 | 200 |
| Pulper/foodwaste water | 1 | 3 | 90 | 30000 |

**Ship profile coefficient** ($\alpha$) calculator factors

| | | |
|---|---|---|
| No of Crew in cabins | 1000 | |
| No of Passangers in cabins | 2300 | |
| No of Public toilets&urinals | 100 | |
| Route hours/day, passangers | 24 | |
| Operational hours, crew | 24 | |
| Toilet flushes/person/day | 7 | |
| Hot meals served to passang | 1 | (1=YES, 0=NO) |
| Bed sheets washed onboard | 1 | (1=YES, 0=NO) |

**Corrected wastewater treatment loading**

| | Ship | Hydraulic | | | | Concentrations | | |
|---|---|---|---|---|---|---|---|---|
| | Profile | load | BOD5 | COD | TSS | BOD5 | COD | TSS |
| | *α* | m3/day | $kgO_2$/day | $kgO_2$/day | kg/day | mg/l | mg/l | mg/l |
| Black water vacuum | ***1,00*** | 66,0 | 148,5 | 297,0 | 104,0 | | | |
| Black water gravity | ***0,00*** | 0,0 | 0,0 | 0,0 | 0,0 | | | |
| Accommodation graywater | ***1,00*** | 495,0 | 66,0 | 125,4 | 39,6 | | | |
| Galley water | ***1,00*** | 165,0 | 412,5 | 618,8 | 247,5 | | | |
| Laundry water | ***1,00*** | 82,5 | 16,5 | 49,5 | 11,6 | | | |
| Pulper/foodwaste water | ***1,00*** | 9,9 | 297,0 | 445,5 | 207,9 | | | |
| **TOTAL** | | **818,40** | **940,50** | 1536,15 | 610,50 | 1149 | 1877 | 746 |

**Sewage treatment plant load calculator - Cruise ship**

| | |
|---|---|
| Number of crew | 1000 |
| Number of passangers | 2000 |

**Treated wastewater characteristics**

| | Y/N | l/p/d | gBOD/d | mg/l |
|---|---|---|---|---|
| Black water vacuum | 1 | 20 | 45 | 2250 |
| Black water gravity | 0 | 70 | 45 | 0 |
| Accommodation graywater | 1 | 150 | 20 | 133 |
| Galley water | 1 | 50 | 125 | 2500 |
| Laundry water | 1 | 25 | 5 | 200 |
| Pulper/foodwaste water | 1 | 3 | 90 | 30000 |

**Ship profile coefficient** ($\alpha$) calculator factors

| | | |
|---|---|---|
| No of Crew in cabins | 1000 | |
| No of Passangers in cabins | 2000 | |
| No of Public toilets&urinals | 100 | |
| Route hours/day, passangers | 14 | |
| Operational hours, crew | 24 | |
| Toilet flushes/person/day | 6 | |
| Hot meals served to passang | 1 | (1=YES, 0=NO) |
| Bed sheets washed onboard | 1 | (1=YES, 0=NO) |

**Corrected wastewater treatment loading**

| | Ship | Hydraulic | | | | Concentrations | | |
|---|---|---|---|---|---|---|---|---|
| | Profile | load | BOD5 | COD | TSS | BOD5 | COD | TSS |
| | *α* | m3/day | $kgO_2$/day | $kgO_2$/day | kg/day | mg/l | mg/l | mg/l |
| Black water vacuum | ***0,72*** | 43,3 | 97,5 | 195,0 | 68,3 | | | |
| Black water gravity | ***0,00*** | 0,0 | 0,0 | 0,0 | 0,0 | | | |
| Accommodation graywater | ***0,72*** | 325,0 | 43,3 | 82,3 | 26,0 | | | |
| Galley water | ***0,72*** | 108,3 | 270,8 | 406,3 | 162,5 | | | |
| Laundry water | ***1,00*** | 75,0 | 15,0 | 45,0 | 10,5 | | | |
| Pulper/foodwaste water | ***0,72*** | 6,5 | 195,0 | 292,5 | 136,5 | | | |
| **TOTAL** | | **558,17** | **621,67** | 1021,08 | 403,75 | 1114 | 1829 | 723 |

32% reduced hydrayulic loading, 34% reduced organic loading

# All streams or BW+AccGW

**Sewage treatment plant load calculator - Cruise ship**

| | |
|---|---|
| Number of crew | 1000 |
| Number of passangers | 2300 |

**Treated wastewater characteristics**

| | Y/N | l/p/d | gBOD/d | mg/l |
|---|---|---|---|---|
| Black water vacuum | 1 | 20 | 45 | 2250 |
| Black water gravity | 0 | 70 | 45 | 0 |
| Accommodation graywater | 1 | 150 | 20 | 133 |
| Galley water | 1 | 50 | 125 | 2500 |
| Laundry water | 1 | 25 | 5 | 200 |
| Pulper/foodwaste water | 1 | 3 | 90 | 30000 |

**Ship profile coefficient** ($\alpha$) calculator factors

| | | |
|---|---|---|
| No of Crew in cabins | 1000 | |
| No of Passangers in cabins | 2300 | |
| No of Public toilets&urinals | 100 | |
| Route hours/day, passangers | 24 | |
| Operational hours, crew | 24 | |
| Toilet flushes/person/day | 7 | |
| Hot meals served to passang | 1 | (1=YES, 0=NO) |
| Bed sheets washed onboard | 1 | (1=YES, 0=NO) |

**Corrected wastewater treatment loading**

| | Ship | Hydraulic | | | | Concentrations | | |
|---|---|---|---|---|---|---|---|---|
| | Profile | load | BOD5 | COD | TSS | BOD5 | COD | TSS |
| | *α* | m3/day | $kgO_2$/day | $kgO_2$/day | kg/day | mg/l | mg/l | mg/l |
| Black water vacuum | ***1,00*** | 66,0 | 148,5 | 297,0 | 104,0 | | | |
| Black water gravity | ***0,00*** | 0,0 | 0,0 | 0,0 | 0,0 | | | |
| Accommodation graywater | ***1,00*** | 495,0 | 66,0 | 125,4 | 39,6 | | | |
| Galley water | ***1,00*** | 165,0 | 412,5 | 618,8 | 247,5 | | | |
| Laundry water | ***1,00*** | 82,5 | 16,5 | 49,5 | 11,6 | | | |
| Pulper/foodwaste water | ***1,00*** | 9,9 | 297,0 | 445,5 | 207,9 | | | |
| **TOTAL** | | **818,40** | **940,50** | 1536,15 | 610,50 | 1149 | 1877 | 746 |

**Sewage treatment plant load calculator - Cruise ship**

| | |
|---|---|
| Number of crew | 1000 |
| Number of passangers | 2300 |

**Treated wastewater characteristics**

| | Y/N | l/p/d | gBOD/d | mg/l |
|---|---|---|---|---|
| Black water vacuum | 1 | 20 | 45 | 2250 |
| Black water gravity | 0 | 70 | 45 | 0 |
| Accommodation graywater | 1 | 150 | 20 | 133 |
| Galley water | 0 | 50 | 125 | 0 |
| Laundry water | 0 | 25 | 5 | 0 |
| Pulper/foodwaste water | 0 | 3 | 90 | 0 |

**Ship profile coefficient** ($\alpha$) calculator factors

| | | |
|---|---|---|
| No of Crew in cabins | 1000 | |
| No of Passangers in cabins | 2300 | |
| No of Public toilets&urinals | 100 | |
| Route hours/day, passangers | 24 | |
| Operational hours, crew | 24 | |
| Toilet flushes/person/day | 7 | |
| Hot meals served to passang | 1 | (1=YES, 0=NO) |
| Bed sheets washed onboard | 1 | (1=YES, 0=NO) |

**Corrected wastewater treatment loading**

| | Ship | Hydraulic | | | | Concentrations | | |
|---|---|---|---|---|---|---|---|---|
| | Profile | load | BOD5 | COD | TSS | BOD5 | COD | TSS |
| | *α* | m3/day | $kgO_2$/day | $kgO_2$/day | kg/day | mg/l | mg/l | mg/l |
| Black water vacuum | ***1,00*** | 66,0 | 148,5 | 297,0 | 104,0 | | | |
| Black water gravity | ***0,00*** | 0,0 | 0,0 | 0,0 | 0,0 | | | |
| Accommodation graywater | ***1,00*** | 495,0 | 66,0 | 125,4 | 39,6 | | | |
| Galley water | ***0,00*** | 0,0 | 0,0 | 0,0 | 0,0 | | | |
| Laundry water | ***0,00*** | 0,0 | 0,0 | 0,0 | 0,0 | | | |
| Pulper/foodwaste water | ***0,00*** | 0,0 | 0,0 | 0,0 | 0,0 | | | |
| **TOTAL** | | **561,00** | **214,50** | 422,40 | 143,55 | 382 | 753 | 256 |

32% reduced hydraulic loading, 77% reduced organic loading

# Waste water sampling

- Sampling change from 9am (season 2008) to 3am (season 2009) by one operator:
  - Average ammonia on effluent 20-25% down
  - Despite huge mixing, BW production drop dramatically after 10pm partial cause for improved results
- Influent sampling even more challenging directly from the pipe
  - Multiple samples during whole day
  - Settling in tanks taken into consideration (freshnes, level and mixing)
  - Which waters are going in from where ?

# AWP process design data

BLACKWATER

| Ship | collecting | BOD | COD | SCOD | N | SS | litraa / henkilö | gBOD/pers/day |
|---|---|---|---|---|---|---|---|---|
| TOTAL | | 95948 | 139466 | 15039 | 10209 | 97702 | 937 | 1954 |
| Samples | | 47 | 24 | 7 | 20 | 47 | 47 | 47 |
| **Average** | | **2041** | **5811** | **2148** | **510** | **2079** | **20** | **42** |
| *EPA measurement* | | *526* | *1140* | | | *545* | *65* | *34* |
| *Cruise line spec* | | *2500* | | | | *1500* | *17* | *43* |

ACCOMMODATION GRAY

| Ship | collecting | BOD | COD | SCOD | N | SS | litraa / henkilö | gBOD/pers/day |
|---|---|---|---|---|---|---|---|---|
| TOTAL | | 10794 | 10898 | 1080 | 175 | 6371 | 586 | 133,848 |
| Samples | | 45 | 25 | 6 | 12 | 45 | 6 | 6 |
| **Average** | | **240** | **436** | **180** | **15** | **142** | **98** | **22** |
| Cruise line Spec. | | 200 | | | | 100 | 155 | 31 |

# AWP process design data

GALLEY WATER

| Ship | collecting | BOD | COD | SCOD | N | SS | litraa / henkilö | gBOD/pers/day |
|---|---|---|---|---|---|---|---|---|
| TOTAL | | 45617 | 66530 | 12585 | 885 | 30223 | | |
| Samples | | 20 | 20 | 6 | 14 | 22 | | |
| **Average** | | **2281** | **3327** | **2098** | **63** | **1374** | **81** | **185** |
| Cruise line spec. | | 2500 | | | | 2500 | 50 | 125 |

LAUNDRY WATER

| Ship | collecting | BOD | COD | SCOD | N | SS | litraa / henkilö | gBOD/pers/day |
|---|---|---|---|---|---|---|---|---|
| TOTAL | | 6407 | 8570 | 1372 | 113 | 3415 | 278 | 22 |
| Samples | | 42 | 22 | 5 | 12 | 43 | 6 | 6 |
| **Average** | | **153** | **390** | **274** | **9** | **79** | **46** | **4** |
| Cruise line spec. | | 300 | | | | 300 | 25 | 8 |

PULPER WATER

| Ship | collecting | BOD | COD | SCOD | N | SS | litraa / henkilö | gBOD/pers/day |
|---|---|---|---|---|---|---|---|---|
| TOTAL | | 980731 | 519500 | 29600 | 669 | 761512 | 0 | 0 |
| Samples | | 28 | 7 | 3 | 3 | 27 | 10 | 10 |
| **Average** | | **35026** | **74214** | **9867** | **223** | **28204** | **3** | 105 |
| Cruise line spec. | | 30000 | | | | 20000 | 3 | 90 |

# Simple comparison of data

- Average untreated concentrations of Copper

| | total | dissolved |
|---|---|---|
| – 2004 average wastewater | 677ug/l | 167ug/l |
| – 2008 flow weighed av.total gray | 510ug/l | 195ug/l |
| – 2001 ADEC graywater | 483ug/l | NA |
| – 2008 Laundry | 278ug/l | 253ug/l |
| – 2008 Galley | 383ug/l | 232ug/l |
| – 2008 Food pulper | 208ug/l | 15ug/l |

| Bunker source dissolved copper | Min. | Av. | Max. |
|---|---|---|---|
| – 2008 Admiralty Bunker | 0,22 | ~10 | 280ug/l |

# Simple comparison of data

- Average untreated concentrations of Nickel

| | total | dissolved |
|---|---|---|
| – 2004 average wastewater | 34ug/l | 17.2ug/l |
| – 2008 flow weighed av.total gray | 29.7ug/l | 18.2ug/l |
| – 2001 ADEC graywater | 48.7ug/l | NA |
| – 2008 Laundry | 6.19ug/l | 4.85ug/l |
| – 2008 Galley | 29.2ug/l | 26.4ug/l |
| – 2008 Food pulper | 22.4ug/l | 31.1ug/l |

| Bunker source dissolved nickel | Min. | Av. | Max. |
|---|---|---|---|
| – 2008 Admiralty Bunker | 0,1 | ~1.5 | 470ug/l |

# Simple comparison of data

- Average untreated concentrations of Zinc

| | total | dissolved |
|---|---|---|
| – 2004 average wastewater | 3130ug/l | 792ug/l |
| – 2008 flow weighed av.total gray | 2540ug/l | 1610ug/l |
| – 2001 ADEC graywater | 790ug/l | NA |
| – 2008 Laundry | 345ug/l | 266ug/l |
| – 2008 Galley | 1460ug/l | 1070ug/l |
| – 2008 Food pulper | 6380ug/l | 47800ug/l |

| Bunker source dissolved zinc | Min. | Av. | Max. |
|---|---|---|---|
| – 2008 Admiralty Bunker | 1 | ~50 | 3300ug/l |

# Simple comparison of data

- Concentrations (2008 EPA totals, 25 samples)

| | Copper | Nickel | Zinc |
|---|---|---|---|
| – Av.influent | 519ug/l | 22,4ug/l | 986ug/l |
| – AWP biomass | 10800ug/l | 245ug/l | 19400ug/l |
| – Screened solids | 22700ug/l | 537ug/l | 33600ug/l |
| | | | |
| – Effluent | 16,6ug/l | 13,6ug/l | 198ug/l |
| – Reduction | 96-98% | 0-48% | 0-86% |

# Simple comparison of data

- Despite peak concentrations of bunker water on all three metals go beyond the average concentration met on the ships, the estimated average concentration shows that ships contrinute a lot more.
- The data collected by Alaska and EPA proove that current AWP's remove a bulk of metals, but not all !!

# Ammonia and metals on EPA 2008 report

**In the future metals have to be specified also:**

- Sources of pollution not totally known
- Suppliers do not know the reductions on their processes

- All suppliers with units on operation are collecting data

| HAL Veendam (Zenon) | | | | | | COD | 1130 | 50,4 |
|---|---|---|---|---|---|---|---|---|
| | | Limit | Laundry | Acc. | Pulper | Galley | AWP Infl. | AWP effl. |
| Ammonia | mg/l | 2,9 | 0,36 | 1 | 29 | 0,46 | 56 | 7,58 |
| Copper (TOT) | ug/l | 3,1 | 258 | 975 | 400 | 88 | 246 | 8,97 |
| Copper (dissolved) | ug/l | | 182 | 90 | 17,5 | 50,9 | 59 | 8 |
| Nickel (TOT) | ug/l | 8,2 | 10,7 | 29,4 | 41,6 | 25,8 | 27,3 | 15,3 |
| Nickel (dissolved) | ug/l | | 7,3 | 19,6 | 38,6 | 22,8 | 22 | 15,5 |
| Zinc (TOT) | ug/l | 81 | 303 | 1500 | 4210 | 1010 | 947 | 360 |
| Zinc (dissolved) | ug/l | | 178 | 635 | 3780 | 599 | 318 | 353 |

| Norwegian Star (Scanship, no pulper) | | | | | | COD | 909 | 39,2 |
|---|---|---|---|---|---|---|---|---|
| | | Limit | Laundry | Acc. | Pulper | Galley | AWP Infl. | AWP effl. |
| Ammonia | mg/l | 2,9 | | | | | 46 | 32 |
| Copper (TOT) | ug/l | 3,1 | 495 | 167 | 312 | 408 | 342 | 9,48 |
| Copper (dissolved) | ug/l | | 553 | 89,1 | 23,9 | 61,8 | 113 | 6,51 |
| Nickel (TOT) | ug/l | 8,2 | 3,11 | 8,37 | 27,9 | 16,8 | 12,8 | 12,7 |
| Nickel (dissolved) | ug/l | | 2,94 | 8,11 | 28,2 | 9,97 | 10,3 | 12,8 |
| Zinc (TOT) | ug/l | 81 | 455 | 323 | 987 | 500 | 349 | 673 |
| Zinc (dissolved) | ug/l | | 464 | 218 | 634 | 324 | 99,9 | 656 |

| Island Princess (Hamworthy, BW- AccGW treated) | | | | | | COD | 1930 | 114 |
|---|---|---|---|---|---|---|---|---|
| | | Limit | Laundry | Acc. | Pulper | Galley | AWP Infl. | AWP effl. |
| Ammonia | mg/l | 2,9 | 1,29 | 0,43 | 35 | 11,1 | 221 | 33,6 |
| Copper (TOT) | ug/l | 3,1 | 325 | 580 | 118 | 620 | 1170 | 18,3 |
| Copper (dissolved) | ug/l | | 242 | 462 | 4,4 | 479 | 44,7 | 16,9 |
| Nickel (TOT) | ug/l | 8,2 | 7,86 | 12,4 | 19,7 | 27 | 27,6 | 14,3 |
| Nickel (dissolved) | ug/l | | 4,7 | 12,7 | 27 | 24,3 | 15,7 | 14 |
| Zinc (TOT) | ug/l | 81 | 470 | 604 | 20300 | 1090 | 1430 | 207 |
| Zinc (dissolved) | ug/l | | 339 | 404 | 139000 | 956 | 100 | 205 |

| Oosterdam (Rochem dual stream, no pulper) | | | | | | COD | 254 | 45 |
|---|---|---|---|---|---|---|---|---|
| | | Limit | Laundry | Acc. | Pulper | Galley | AWP gw/ln | AWP gw/ef |
| Ammonia | mg/l | 2,9 | | | | | 4,54 | 1,92 |
| Copper (TOT) | ug/l | 3,1 | 35,3 | 988 | 2,32 | 417 | 213 | 69,9 |
| Copper (dissolved) | ug/l | | 35,6 | 26,3 | | 335 | 109 | 18,3 |
| Nickel (TOT) | ug/l | 8,2 | 3,09 | 85,8 | 0,285 | 47,2 | 17,1 | 3,18 |
| Nickel (dissolved) | ug/l | | 4,46 | 28,2 | | 49,1 | 13,8 | 3,3 |
| Zinc (TOT) | ug/l | 81 | 151 | 10100 | 3,22 | 3260 | 791 | 383 |
| Zinc (dissolved) | ug/l | | 82,4 | 1910 | | 2390 | 170 | 279 |

# Approx. AWP process size and cost

- Biological process 5000pax (1200m3/d)
  - Tank capacity 330m3
  - Foot print 80m2
  - Cost turnkey:  2 MUSD process + 1,5 MUSD installation
- Biological process 3000pax (800m3/d)
  - Tank capacity 240m3
  - Foot print 70m2 (lower tanks => worse oxygen transfer)
  - Cost turnkey: 1,5 MUSD process+ 1,2 MUSD installation
- Oxygen transfer to the process main limiting factor making reactor size larger

# Normal deck heights

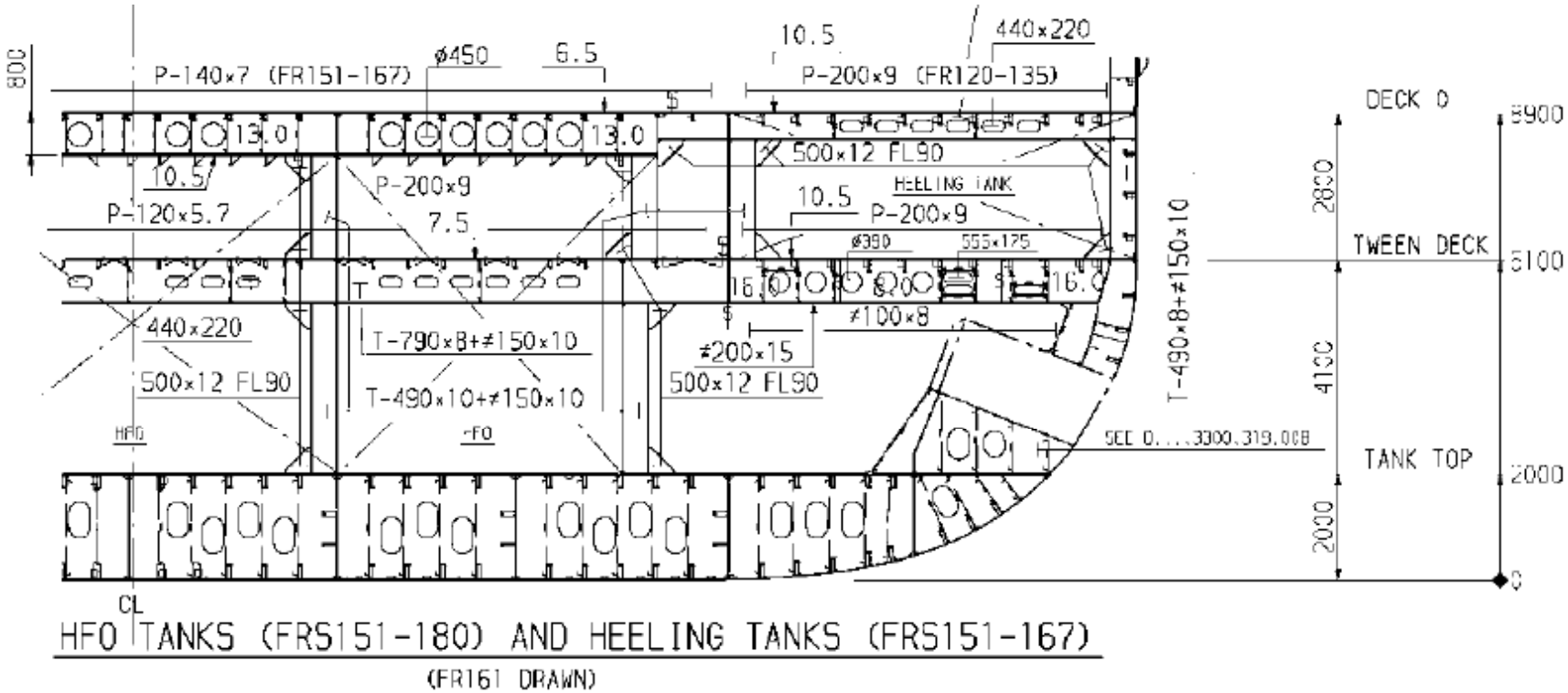

# AWP process size

- Equalizing tanks normally as big as can be installed or found
  - Mixing by pumping
  - If proper size cannot be secured, waste water holding tank pumping must be controlled by timers
- Sludge holding depends the owner
  - 40m3/day from 5000pax with dry solid content of approx. 2% (screens 1/3 and bioprocess excess 2/3)
- Plus many intermediate pumping tanks + all the ”bells and whistles”

# AWP is simple only in block diagrams

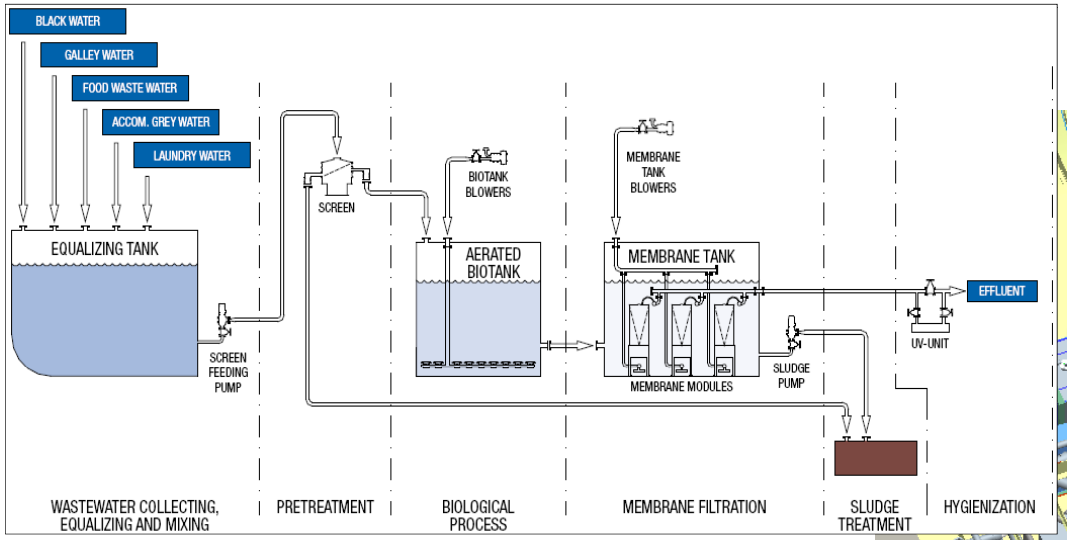


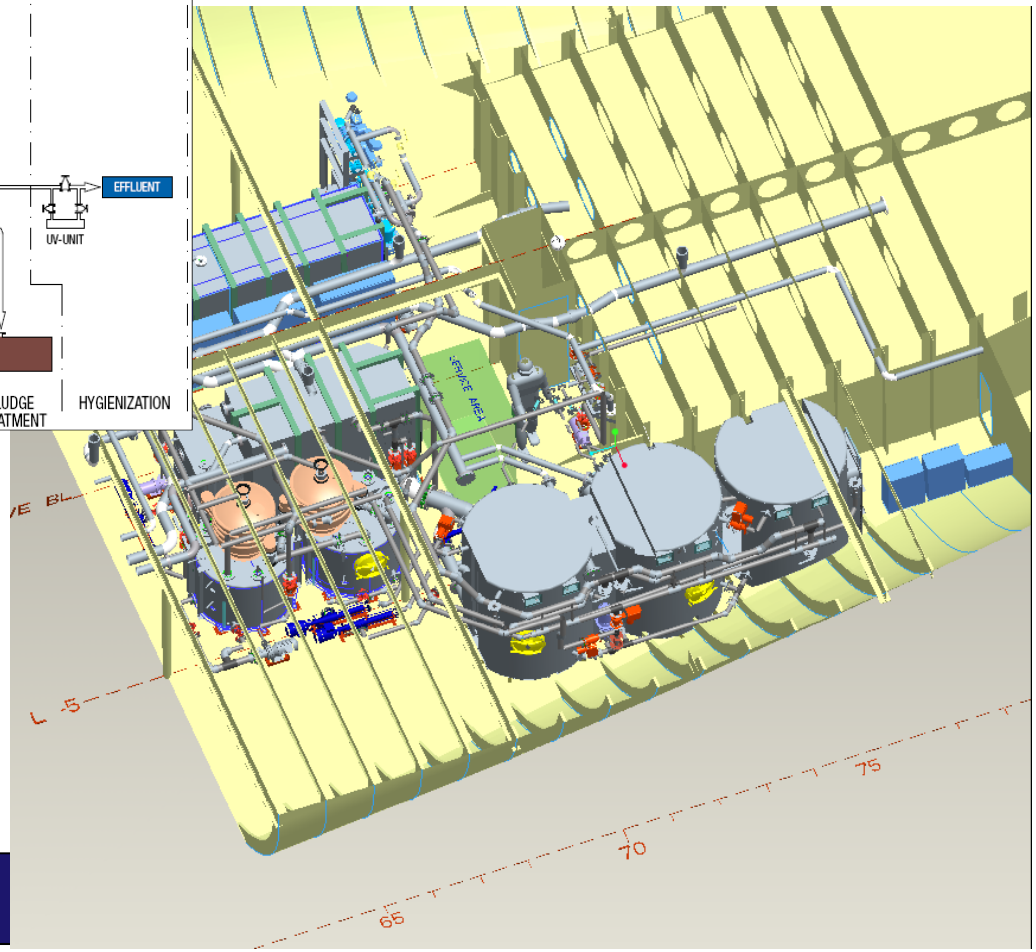

Example:

In this Evac MBR process case they found space for the bioreactor on a store space

# 3300 person Cruise ship

Source 2008 VTT/Baltic

Total dry weight of AWP process 83tons. Must be overhauled in pieces into engine room via hatches and water tight doors.

Energy cons: 204kW

Main components and electricity consumption (preliminary)

| | Qty | Supplier: | Dry weight (kg) | Power cons (kW) |
|---|---|---|---|---|
| Main grey water transfer pump | 2 | Evac | 108 | 4 |
| Main laundry water transfer pump | 2 | Evac | 52 | 4 |
| Main galley grey water transfer pump | 2 | Evac | 52 | 4 |
| Aeration mixing for the MBR mixing tank (see option) | | Evac | | |
| Blower for the mixing tank | | Evac | 50 | |
| **Pretreatment equipment** | | | | |
| Vibro screen with double sieve | 4 | Evac | 1864 | 7,4 |
| Pump tank after screening | 2 | Evac | 500 | |
| **Equipments for MBR** | | | | |
| MBR tank equipments (membrane cases, isolating valves etc.) | 1 | Evac | 7500 | |
| Blower | 5 | Rietsche | 3690 | 150 |
| Inverter for the blowers | 5 | Vacon | 25 | |
| Air distribution pipelines | 2 | Evac | 65 | |
| FBDA | 140 | Nopon | 162 | |
| Antifoam distribution pipelines | 2 | | 50 | |
| Pressure transmitter | 4 | Gems | | |
| Level sensor | 15 | Besta | | |
| Foam detector with amplifier | 5 | Claris | | |
| TSS sensor | 2 | Hach | | |
| DO sensor | 2 | Hach | | |
| Flow meters | 3 | Siemens | | |
| Pressure switch | 2 | Gems | | |
| pH meter | 2 | Hach | | |
| Turbidity meter for effluent control | 3 | Hach | | |
| Membranes ES 200 (Kubota) | 10 | Kubota | | |
| Membranes lifting tool (Kubota) | 1 | Kubota | | |
| Effluent tank (7 $m^3$) | 1 | Evac | 770 | |
| Foam trap tank (10 $m^3$) | 1 | Evac | 1100 | |

# 3300 person Cruise ship

Source 2008 VTT/Baltic

In this case also a Denitrification tank accoridng to Baltic rules

Bioprcess 260m3 and Denitrification 70m3

Sludge holding for 3-4 days 140m3 (with aeration mixing)

| | | | | |
|---|---|---|---|---|
| **Pumps** | | | | |
| Screen feeding pumps | 4 | Evac | 292 | 7 |
| MBR feeding tank pump | 4 | Evac | 292 | 7 |
| Sludge discharge pump | 4 | Evac | 219 | 5,25 |
| Effluent pump | 2 | Evac | 108 | 7,2 |
| Antifoam dosing pump | 3 | Evac | | 0,1 |
| Alkali dosing pump | 2 | Evac | | 0,1 |
| Sludge recirculation pump | 4 | Evac | 108 | 7,2 |
| **Automation** | | | | |
| Master control unit | 1 | Evac | 250 | |
| Telemetry with remote monitoring, contolling & software loading | 1 | Evac | | |
| Control panel for unit | 1 | Evac | 50 | |
| SC1000 | 1 | Hach | 5 | |
| Local transfer pump panels | 3 | Siemens | | |
| Frequency controllers for the pumps | 12 | Vacon | 60 | |
| Jets panel changes | 4 | Evac | | |
| **Chemical dosing** | | | | |
| Tanks | 3 | | | |
| Pumps | 3 | | | |
| Chemicals | 2 | | | |
| **Valves and internal pipings** | | | | |
| Motor actuated valve | 15 | | 300 | 0,9 |
| Solenoid valve | 11 | | 66 | |
| Flow control valve | 9 | | 90 | 0,23 |
| Pipings with elbows and T's | 1 | | 1500 | |
| Valves | 100 | | 500 | |
| **Process and Sludge tanks & tank equipment** | | | | |
| 47m3 Biotanks | 2 | Evac | 11000 | |
| 78 m3 Membrane tanks | 2 | Evac | 16000 | |
| 70 m3 Denitrification tank | 1 | Evac | 18000 | |
| 70m3 sludge tanks | 2 | Evac | 18000 | |
| Aeration mixing for sludge tank | 2 | Evac | | |
| | | | **82828** | **204** |

# AWP turnkey project steps

## PLANNING AHEAD IS THE KEY FOR SUCCESS

| AWP retrofit project steps |
|---|
| **GENERAL** |
| Accommodation and food onboard for installation crew |
| Fire watch |
| Electricity, gases, consumables, ventilation, heating, pr air, etc. |
| Lifting on and off of equipment/material from shipside |
| Garbage/trash disposal |
| Ship stability evaluation |
| Project manager |
| Travel costs |
| Freight costs to logistic centre to on board the vessel |
| Onsite installation supervision & management |
| Installation insurances and correct work permissions |

# AWP turnkey project steps

## ENGINEERING TAKES NORMALLY LONGER THAN EXPECTED

| ENGINEERING |
|---|
| Process design and component selection |
| Basic design of hull tanks |
| Detail design of hull tanks |
| Electric system design (basic + detail) |
| AWP automation system design (basic + detail) |
| Main Automation System (MAS) integration (basic + detail) |
| Type approval certificates required by Class and USCG |
| Modified ship's vents fills and sounding diagram |
| System internal piping diagrams |
| System external piping diagrams |
| Equipment arrangement plan |
| Ventilation drawings |
| Class approved material certificates and specs |
| Modified ship's tank and capacity plan |
| Penetration drawings for pipes, vents and electrical, both fire and water tight |
| Modified ship's damage control drawings |
| Modified ship's bilge and ballast piping drawings |
| Workshop drawings of foundations, prefabricated pipes etc. |
| Installation plan, schedule and procedures for equipment loading |
| Meetings and correspondance with class, authorities and owner |
| Project related classification fees |

# AWP turnkey project steps

## COMPONENTS ARE RARELY ”OFF THE SHELF” => LONG LEAD TIME

| EQUIPMENT AND MATERIAL |
|---|
| Steel for new tanks, tank modifications, foundations etc, |
| Piping (vent, waste water, effluent, sludge, aeration) |
| Penetrations |
| Damage control valves |
| Tools and tool storage |
| Scaffolding (support and work structures) |
| Biological and separation process units |
| Pumps, control panels etc. equipments related to pump units |
| Pre screen |
| Process tank aeration systems |
| UV units |
| Blowers (vent and aeration) |
| Defoaming system |
| Chemical dosing systems (pH control, coagulation, flokkulation etc.) |
| All valves |
| Sight glasses, vacuum interface valves etc. prefab components |
| automation equipment |
| MAS equipment |
| Gas monitoring system |
| Electrical equipment |
| Cables, cable trays, penetrations etc. |
| Paint |

# AWP turnkey project steps

## LIMITED SPACE AND ACCESS + INSTALLTION DURING SHIP OPERATION PROLONGS THE INSTALLATION TIME

| |
|---|
| **DEMOLITION WORK** |
| Demolition and removal of existing units from installation location |
| Demolition of instruments, piping etc. from the existing tanks |
| Scrapped material / equipment outside the vessel |
| |
| **PREPARATION WORK** |
| Protection of contracted spaces |
| Emptying, cleaning and gas freeing of installation related tanks |
| |
| **EQUIPMENT INSTALLATION WORK** |
| Installation of equipments according to work specification |
| |
| **STEEL WORK** |
| Building of new loose steel tanks |
| Steel work related to the existing tanks |
| Surface preparation related to the existing tanks |
| Coating of the existing tanks |
| Building of foundations for main equipment |
| Building of pump skids |

# AWP turnkey project steps

DESPITE GOOD ENGINEERING, LOT OF PIPING AND COMPONENT INSTALLATION NEED SKILLFULL IMPROVISATION

| |
|---|
| **PIPE WORK** |
| Installation of waste water piping according to work specification |
| Installation of sludge piping according to work specification |
| Installation of effluent piping according to work specification |
| Installation of vent piping according to work specification |
| Installation of aeration piping according to work specification |
| |
| **ELECTRIC WORK** |
| Cabling and installation of cable trays and penetrations, marking |
| Connection of electric equipments to ship's systems |
| |
| **AUTOMATION WORK** |
| automation system related work |
| MAS related work |
| |
| **COMMISSIONING** |
| Piping pressure and tightness tests |
| FAT's |
| Start-up, system testing, all manuals, etc. |
| Training |
| |
| **FINALIZING** |
| Final cleaning |
| Touch-up painting |
| Gratings, ladders, handrails, stairs and floorplates where necessary |

# Constructional issues

- Low deck height causing issues
  - Oxygen transer
    - Nitrogen removal lead possibly into use of pure oxygen due to increased oxygen demand
    - Space for additional compressor and oxygen makers
  - Removal of large elements upwards
    - For example submerged membrane removal need space also upwards
  - Proper ventilation height above the bioprocess needed due to ship movements
  - ”Foaming space” and foam killing equipment

# Constructural issues

- Transport routes
  - Large components must sometimes be cut into pieces to be able to transport them to their loctions
- On retrofit where prefabrication is impossible
  - It is difficult to work efficiently as there is no space to increase manpower around the AWP
  - Time consuming => expensive

# Constructural issues

- Interfaces are most important for the cruise ships applications
  - Changing operation or components to previous collecting steps
- Use of structural tanks made for fuel or drinking water may not be optimum
- Sludge disposal routes and smell control
- Existing vent pipes, routing & water pockets
- Etc. Etc.

# AWP Operation

- After the system installation and start-up it takes a while until the process is stabilized
  - Crew and system supplier need normally to fix various hot-spots onboard and make some fine tuning
- Suppliers with multiple installation know their process well. New comers face more various ”surprices”
  - Overall publiced data is nevertheless sufficient even for new suppliers to size their processes correctly
- Crew learn to ”play” with AWP feed, chemicals, holding capacities, test timing etc. => meet criteria when so needed

# AWP Operational issues

- Smell
  - Ship is a closed structure and venting difficult
    - Ozone systems installed on worst vent pipes
    - If smell to the engine room area => smell control difficult => can leak to pax. areas
  - Prescreens not tight and need to be serviced
  - Sludge, foodwaste processing, foaming, leakages
- Chemical consumption
  - AWP's consume various chemicals
    - DAF chemicals expensive (feed shut on high seas)
    - Chemical feed => process hot spots

# AWP Operational issues

- Sludge
  - Most of the organic waste from bioreactors is collected into sludge
    - Ships dump the sludge outside of 12nm according company policy
    - Most modern ships dry the sludge and burn it:
      - external dryers smell, spread sludge dust and consume energy
      - Internal incenerator dryers have huge problems with the ”glue fase” during the drying process
- Energy
  - Bioprocess must operate 24/7 even outside of Alaskan waters
  - Overall ecolocigal foot print always challenged !

# AWP Operational issues

- Redundancy and hazards
  - Holding tank usage
    - Future Ballast water treatment rules in the future
    - Hydrogen sulfate creation in ”septic condition”
  - Start up period of biological process after hazard can take time
  - Space and cost versus 100% redundancy of mechanical components
- Hotel operations and US public health days
  - Chemicals (Chlorine for disinfection)

# New Alaska rules

## Ammonia

- Easier source defination (human activity)
  - Data on Nitrogen concentrations on influent already exist
- Nitrification/denitrification known to most AWP suppliers
  - Need more biosludge and oxygen
  - Separate denitrification step or usage of equalizing tank
  - Some older ships just run out of space !

# New Alaska rules

Ammonia

- Partial reduction already on current AWP processes
- New Baltic rules support ammonia removal AWP integration
- Ammonia removal lead to better environmental practises as all waste water streams are more likely be treated

# Hamworthy conserns

## Ammonia Toxicity

Technical assessment - Challenges

Can BNR meet General Permit Ammonia limit? - trial is necessary.

- Ammonia is many times higher than that in municipal sewage (USEPA).
- Concentration fluctuations are far greater.
- Higher peak flow factors are to be allowed for.

- Black water can have 1000 mg/l ammonia, or higher with 'better' vacuum systems.
- Grey water dilute ammonia concentration.
- Higher temperature benefits the biological reaction rate - but there is a limit.

- Dedicated operation resource and skill base is required.
- Bioreactor size and footprint.
- Toxicity, alkalinity, foaming, vent capacity.

- Partial nitrification occurred to some MBRs.

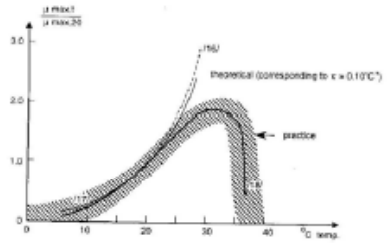


Fig 3.7 Nitrification as a function of temperature. As opposed to the other biological processes in wastewater treatment, thermophilic nitrifying bacteria are unknown.

# New Alaska rules

## Metals

- All current data to be analysed properly !
- Proper tests on current AWP removal rates
- After source reduction most propably an add on technology
  - Proper specification on challenge water (perhaps with 2 water qualities) to suppliers

# New Alaska rules

## Metals

- Specification to include Life cycle, maintenance, sludge etc. information requests
- As all suppliers would quote their system on same realistic specification, we would get better understanding on:
  - Overall Cost, Weight and Size of new technologies
  - Redundancy requirements of these new add-ons and issues related to operational problems.
  - Instrumentation needs
  - Alternative operational methods. Issues related to waste water holding and shore/sea discharge.

# Conclusions

- What did we learn from previous:
  - Cruise Ship waste water is feed vary case by case due to:
    - Operational variations, ship size, route
    - Collecting and holding system variations
    - Operator views on waste water holding, treatment and sludge management
  - Current Alaska regulation can be met
    - the AWP sizing, operational and constructional issues are 99% under control

# Conclusions

- AWP retrofit installation is always a compromise of cost, space and flow control
- Other  new environmental rules challenge the AWP's
  - Low sulpher fuels/scrubber and ballast water management compete with AWP systems on tanks and space.
  - Ballast water management versus waste water holding are controversial if ballast tanks are used for holding treated waste waters.
- As waters treated, holding practises and sludge management vary between companies  => Worse effluent quality may still mean higher environmental awareness and better technology => Can we judge the process purely on the end of pipe concentration results ?