Errata Sheet for "Operator's Guide for Small Treated Public Water Systems in Alaska"

The following errata are due to changes in nomenclature for Class A and Class B water systems to reflect changes to 18 AAC 80 Drinking Water regulations.

Page

ix	"Class A" should be replaced with "community or non-transient non-community" "Class B" should be replaced with "transient non-community"
22	"Class A" should be replaced with "community or non-transient non-community"
23	Table B, "Class A" should be replaced with "community or non-transient non-community" "Class B" should be replaced with "transient non-community"
103	"Class A" should be replaced with "community or non-transient non-community" "Class B" should be replaced with "transient non-community" Replace "A **Class A System** is a public water system….." with: A **Community Water System** (CWS) is a public water system that serves at least 15 service connections used by year-round residents or regularly serves at least 25 year-round residents. A **Non-Transient Non-Community Water System** (NTNCWS) is a public water system that is not a community water system and that regularly serves at least 25 of the same individuals over six months per year. Replace "A **Class B System** is a public water system….: with A **Transient Non-Community Water System** (TNCWS) is a non-community water system that does not regularly serve at least 25 of the same individuals over six months per year. Replace "A **Class C System** is neither Class A or Class B….." with A **Class C System** is a public water system that is not a community water system, a non-transient non-community water system, a transient non-community water system, or a private water system.
104	"Class A" should be replaced with "community or non-transient non-community" "Class B" should be replaced with "transient non-community"
105	"Class A" should be replaced with "community or non-transient non-community" "Class B" should be replaced with "transient non-community"
108	"Class A" should be replaced with "community or non-transient non-community"
109	"Class A" should be replaced with "community or non-transient non-community"
110	"Class A" should be replaced with "community or non-transient non-community" "Class B" should be replaced with "transient non-community"
120	"Class A" should be replaced with "community or non-transient non-community"
121	"Class B" should be replaced with "transient non-community"

123 “Class A” should be replaced with “community or non-transient non-community”
“Class B” should be replaced with “transient non-community”

153 Ignore definitions for Class A System and Class B System.
Replace “**Class C System**…” with:
Class C System - A public water system that is not a community water system, a non-transient non-community water system, a transient non-community water system, or a private water system.

154 “Class A” should be replaced with “community or non-transient non-community”

181 “Class A” should be replaced with “community or non-transient non-community”
“Class B” should be replaced with “transient non-community”

182 “Class A” should be replaced with “community or non-transient non-community”
“Class B” should be replaced with “transient non-community”

Operator's Guide

For Small Treated Public Water Systems in Alaska

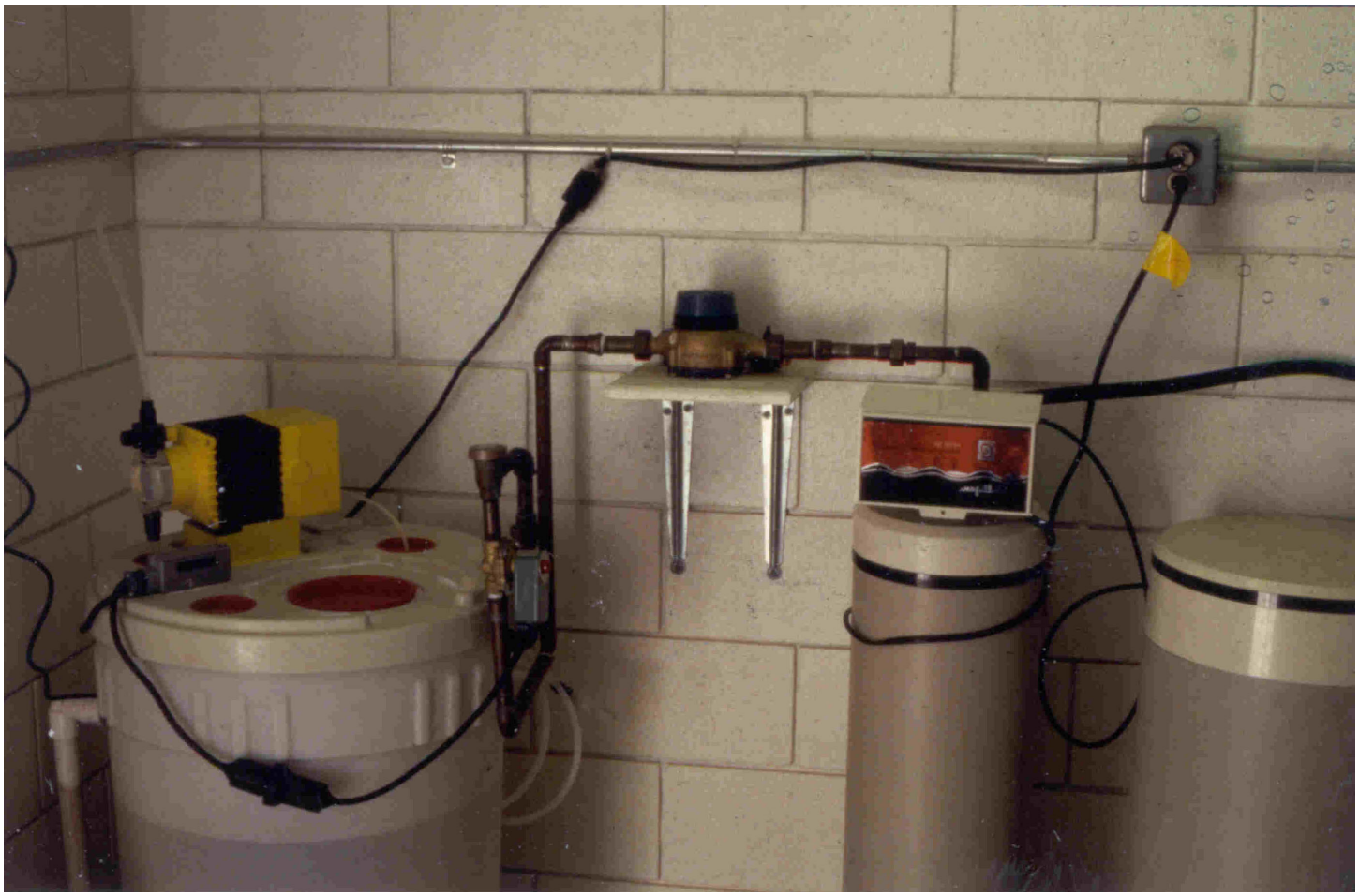

Alaska Training/Technical Assistance Center

In cooperation with the
Alaska Department of Environmental Conservation
Division of Facility Construction & Operation
Operations Assistance Unit

Table of Contents

Table of Contents i
Table of Figures vi
Tables vii
Acknowledgements viii
Introduction ix
Chapter 1 – Introduction to Water Treatment 1
1.1 Background 1
1.2 Source Water 3
1.3 The Hydrologic Cycle 4
1.4 Aquifers 5
1.5 Water – The Universal Solvent 7
Chapter 2 – Source Water Quality and Characteristics 9
2.1 Introduction 9
2.2 Source Water Characteristics 9
2.3 Physical Characteristics 10
2.4 Chemical Characteristics 11
2.4a Groundwater Characteristics 12
2.4b Surface Water Characteristics 12
2.5 Common Water Quality Indicators 13
2.5a pH 13
2.5b Total Dissolved Solids: Conductivity 14
2.5c Hardness 14
2.5d Alkalinity 15
2.5e Iron and Manganese 15
2.5f Dissolved Gases 16
2.5g Corrosivity 17
2.6 Biological Characteristics 18
2.7 Other Organisms Found in Water Sources 20
Chapter 3 – Source Water Protection and Development 21
3.1 Introduction 21
3.2 Source Water Assessment and Protection 21
3.3 Wellhead Protection Program 22
3.4 Well Decommissioning (Abandonment) 24
3.5 Water Rights 24
3.6 Source Water Development 25
3.7 Surface Water Development 25
3.8 Groundwater Development 27
3.9 Well Types 28
3.10 Well Components 29
3.11 Well Pumps 32
3.12 Well System Components 34
3.13 Groundwater Withdrawal 35
3.14 Well Log 36
3.15 Well Production Testing 37

Chapter 4 – Water Treatment 39
4.1 Introduction 39
4.2 Water Quality Problems and Solutions 40
4.3 Removal of Turbidity and Particulate Matter 41
4.3a Cartridge and Bag Filters 41
4.3b Sand Filters 43
4.3c Sand Traps 44
4.3d Screens 45
4.4 Removal of Microorganisms 45
4.5 Removal of Iron and Manganese 45
4.5a Ion Exchange 46
4.5b Sequestering 47
4.6 Removal of Color, Taste and Odor, and Other Organics 48
4.6a Carbon Absorption 48
4.6b Aeration 49
4.6c Use of Chlorine and Ozone 50
4.6d Other Taste and Odor Control Strategies 51
4.7 Objectionable Gases 51
4.8 Control of Hardness (Softening) 51
4.9 Nitrate Removal 52
4.10 Corrosion Control 52
4.10a pH Control 53
4.10b Chemical Coatings 54
4.11 Radon Removal 54
4.12 Control of Nuisance Growth 54
4.13 Prevention of Tooth Decay 55
4.14 Common Chemicals Used For Water Treatment 56
Chapter 5 – Disinfection 57
5.1 Background 57
5.2 Basic Chlorine Chemistry 58
5.3 Breakpoint Chlorination 59
5.4 Chlorine Residual 60
5.5 Effectiveness of Chlorination 61
5.6 Sodium Hypochlorite (NaOCl) 61
5.7 Calcium Hypochlorite [$Ca(OCl)_2$] 62
5.8 Hypochlorinator System 62
5.9 Chemical Feed Pumps 63
5.10 Tablet Chlorinators 64
5.11 Storage and Handling of Hypochlorites 65
5.12 On-Site Hypochlorite Generation 65
5.13 Mixed-Oxidant (MiOx®) Process 66
5.14 Gas Chlorine 66
5.15 Ozone 66
5.16 Ultraviolet (UV) Light 67
5.17 Disinfection By-Products 68
Chapter 6 - Water System Operation & Maintenance 70

6.1 O&M of Groundwater Systems 70
6.2 Well House Inspection 71
6.3 Chemical System Inspection 73
6.4 Operation and Maintenance of Pumps 73
6.5 Motor Maintenance (Non-Submersible Pump) 76
6.6 Operation and Maintenance of Valves 77
6.7 Operation and Maintenance of Pressure Tank 79
6.7a Diaphragm and Bladder Pressure Tanks 80
6.7b Galvanized Pressure Tanks 82
6.8 Storage Facilities Operation and Maintenance 84
6.9 Leak Detection 85
6.10 Cross-Connection 85
6.11 Backflow Preventers 87
6.12 Cross-Connection Control Program 88
6.13 Water System Security 89
Chapter 7 - Troubleshooting 90
7.1 Introduction 90
7.2 Basic Electricity 91
7.2a Current Flow: Amperes 91
7.2b Electrical Pressure: Volts 92
7.2c Resistance: Ohms 92
7.2d Water Flow Analogy of Electrical Circuit 93
7.2e Ohms Law 93
7.3 Electric Power 94
7.4 Troubleshooting Guide 95
7.5 Emergency Well Disinfection 98
7.6 Disinfection Procedure for Shock Chlorinating Systems 98
7.7 Well Disinfection Evaluation 101
Chapter 8 – Public Water Supply Regulations & Monitoring 102
8.1 Introduction 102
8.2 Safe Drinking Water Act (SDWA) 102
8.3 Health Effects of Drinking Water Contaminants 103
8.4 Drinking Water Standards 104
8.4a Primary Standards 104
8.4b Secondary Standards 105
8.5 Public Water System Monitoring 105
8.6 Inorganic Contaminants 106
8.7 Organic Chemicals 109
8.8 Microorganisms 109
8.8a Total Coliform Rule (TCR) 110
8.8b Significance of the Coliform Test 112
8.8c Collecting a Bacteriological (BacT) Sample 113
8.8d Positive (Hot) BacT Sample 113
8.8e Invalid Sample 114
8.9 Interpreting Laboratory Analyses 114
8.10 Consumer Confidence Reports 120

8.11 Surface Water Treatment Regulations 121
8.12 Long Term 1 Enhanced Surface Water Treatment Rule 122
8.13 Disinfectants/Disinfection Byproducts Rule 122
8.14 Proposed Groundwater Rule 123
8.15 Specific Monitoring Information 123
Chapter 9 – Safety 124
9.1 Safety Conditions 124
9.2 Lifting 125
9.3 Electrical Safety 126
9.4 Lockout/Tagout 128
9.5 Chemical Handling and Storage 128
9.5a Sodium Hypochlorite 129
9.5b Calcium Hypochlorite 129
9.5c Chlorine Gas 130
9.6 Material Safety Data Sheets (MSDS) 131
9.7 Personal Protective Equipment 132
9.8 Confined Spaces 132
Chapter 10 - Math 134
10.1 Introduction 134
10.2 Averages 135
10.3 Fractions 135
10.3a Adding or Subtracting Fractions 136
10.3b Multiplying Fractions 137
10.3c Dividing Fractions 137
10.4 Decimals 137
10.4a Subtracting Decimals 138
10.4b Adding Decimals 138
10.4c Multiplying Decimals 139
10.4d Dividing Decimals 139
10.5 Rounding Numbers 140
10.6 Powers 140
10.7 Ratios 141
10.8 Unit Conversions 141
10.9 Solving Word Problems 142
10.10 Area 143
10.10a Rectangle 143
10.10b Circle 144
10.11 Volume 145
10.11a Volume of a Rectangle 145
10.11b Volume of a Cylinder 146
10.12 Pressure 147
10.13 Dosage Calculations 147
10.14 Proportion Problems 150
10.15 Detention Time 150
Glossary 152
Appendix 1 - Certified Laboratories 163

Appendix 2 - Water Well Log Example 169
Appendix 3 - Health Effects 170
Appendix 4 - Technical Assistance and Training Contacts 174
Appendix 5 - Troubleshooting Guide for Submersible Pumps 175
Appendix 6 - Quantities of Calcium Hypochlorite 180
Appendix 7 - Source Testing Schedule 181
Appendix 8 - Boil Water Notice Example 184
Appendix 9 - Laboratory Fees 185
Appendix 10 - Material Safety Data Sheet Example 187
Appendix 11 - Formula Sheet 195
References and Credits 197

Table of Figures

Figure 1.1: Watershed 4
Figure 1.2: The Hydrologic Cycle 5
Figure 1.3: Aquifers 6
Figure 1.4: Water Molecule 7
Figure 2.1: pH of Common Liquids 13
Figure 2.2: *Cryptosporidium* 19
Figure 2.3: *Giardia* 19
Figure 2.4: *E. coli* 19
Figure 2.5: Cyanobacteria 19
Figure 3.1: Johnson Screen 26
Figure 3.2: Infiltration Gallery 27
Figure 3.3: Floating Intake 27
Figure 3.4: Well Components 32
Figure 3.5: Submersible Pump 33
Figure 3.6: Lineshaft Turbine 33
Figure 3.7: Jet Pump 34
Figure 3.8: Cone of Depression 36
Figure 4.1: Cartridge Filter 41
Figure 4.2: Bag Filter 42
Figure 4.3: Cartridge Bag Filtration 43
Figure 4.4: Pressure Filter System 44
Figure 4.5: Ion Exchange System 46
Figure 4.6: Aerator System 50
Figure 5.1: Hypochlorinator System 63
Figure 5.2: UV Disinfection System 68
Figure 6.1: Gate Valve 78
Figure 6.2: Globe Valve 78
Figure 6.3: Check Valve 79
Figure 6.4: Ball Valve 79
Figure 6.5: Hydropneumatic Tanks 80
Figure 6.6: Backsiphonage Condition 86
Figure 6.7: Air Gap 87
Figure 6.8: Atmospheric Vacuum Breaker 87
Figure 6.9: Double Check Valve 88
Figure 6.10: Reduced Pressure Zone Assembly 88
Figure 7.1: Simple Circuit 91
Figure 9.1: Safe Lifting Procedures 126
Figure 9.2: Body Resistance 127
Figure 9.3: Lockout Device 128
Figure 9.4: Warning Tag 128

Tables

Table A: Hardness Scale 15
Table B: Minimum Separation Distances 23
Table C: Water Quality Problems and Solutions 40
Table D: Common Chemicals Used For Water Treatment 56
Table E: Recommended Recharge Pressures 81
Table F: Pressure Tank Selection Chart 83
Table G: Troubleshooting Guide 97
Table H: Monitoring and Repeat Sample Protocol (for a total coliform positive routine sample) 112
Table I: Coliform MCLs 112
Table J: Effects of 60 hz Current on an Average Human 127

Acknowledgements

This manual was researched and written by the Alaska Training/Technical Assistance Center (ATTAC) staff.

Editors:

John W. Carnegie, PhD – ATTAC/University of Alaska Southeast Sitka
Nicole A. Duclos – ATTAC/University of Alaska Southeast Sitka
Paula C. Jackson – ATTAC/University of Alaska Southeast Sitka
Kerry L. Lindley – Alaska Department of Environmental Conservation Division of Facility Construction & Operation
Peter T. Nathanson – ATTAC/University of Alaska Southeast Sitka

Thank you to the following for their contributions to the outline and review of the manual:

Tim Chittenden – US Forest Service
Pat DeSmet – Lake & Peninsula Borough Schools
Dave Ferree – Fairbanks North Star Borough School District
Dennis Kogl – National Park Service
Adam Owen – Alyeska Pipeline
Jim Ridgeway – Anchorage Well & Pump
Joe Sanks – Denali Resorts
Ken Smith – Alaska Department of Environmental Conservation

June 2002

Introduction

As you may know, the State of Alaska has certified operators of water systems serving 500 or more persons or having 100 or more service connections for many years. However, the federal Safe Drinking Water Act (SDWA) Amendments of 1996 require the state to implement a plan in which all small water systems must be operated by a "certified individual." In response to this new federal requirement, the State adopted revised operator certification regulations on January 18, 2001 that require all Class A Public Water Systems and those Class B's using surface water or Groundwater Under Direct Influence of Surface Water (GWUDISW) be operated by a certified operator.

Operator certification requirements for those small systems serving less than 500 persons and having less than 100 service connections are dependent on the classification of the system. Small groundwater systems that provide no chemical treatment are classified as small-untreated systems. Small systems that add a single chemical will be classified as small-treated systems.

Small systems that add more than one chemical for water treatment or employ more complex treatment processes (chemically-aided filtration, membrane technologies) will be classified according to the point rating system used by the State to classify larger systems. Depending on the complexity of the water treatment and processes employed, even small systems may need an operator certified at a higher level.

It should be noted that small-treated systems, as well as small-untreated systems, might employ a variety of "passive" treatment technologies. Passive treatments may include cartridge filters, ion-exchange softening or ion-exchange iron removal devices, ultraviolet disinfection (UV) or sand filtration with no chemical addition. Passive treatment devices, although essential to the treatment goals of a particular water system, generally require minimal routine operator attention. If you are unsure as to the classification of your system, you should contact the Operator Certification Program at the Alaska Department of Environmental Conservation (ADEC).

Operators of small-treated water systems should also be aware of two key provisions of the regulations: "circuit riders" and grandparent certificates. These two provisions are designed to address certification requirements for individuals who operate more than one small system (circuit riders) and existing operators who were operating small systems when the new regulations came into effect (grandparent certificates).

System owners who wish to employ the services of a circuit rider can apply for approval by completing a form provided by the Operator Certification program. In addition, operators who were operating small systems on or before January 18, 2001 can apply for a grandparent certificate. Grandparent certificates are valid only until January 18, 2003, at which time the grandparented operator must become fully certified for the level of the system he or she is operating.

All certificates have a 3-year active period. Once certified, operators of small-treated systems must earn one Continuing Education Unit (CEU) during that 3-year active period to renew their certificates.

This manual will provide general information necessary for operators of small treated systems to prepare for certification examinations. The manual will also be used as the basis for certification training courses. Not all topics are covered in detail. For more information on specific topics, contact you local ADEC office. A bibliography at the end of this manual lists books available on a loan basis from the Alaska Training/Technical Assistance Center (ATTAC) that may be beneficial.

Please understand that not all items discussed in this manual apply to all small treated water systems in Alaska. However, competent operation of small treated public water systems requires that individuals in responsible charge have sufficient knowledge to understand chemicals used for water treatment, their health benefits, how to apply correct dosages, and recognize and correct water system problems. An operator must recognize and eliminate potential contamination that might enter the water system through a cross-connection, repair equipment or oversee equipment replacement projects. Although operators may not perform all aspects of a corrective action themselves, they must be able to identify when addition expertise and assistance is needed. The major responsibility of an operator of a small treated system is to protect public health.

Chapter 1 – Introduction to Water Treatment

1.1 Background

Water treatment processes have been developed over the past century in an effort to protect the public health and minimize **waterborne disease** outbreaks. Water treatment techniques have been established in response to local conditions with various objectives including disinfection, color reduction, turbidity removal, softening, taste and odor control, and corrosion control.

Water used for drinking and food preparation must be free from **pathogenic organisms** – organisms capable of causing disease, and from minerals and organic substances that produce adverse physiological effects. To encourage people to drink water from a safe source, it must be aesthetically acceptable. Aesthetically acceptable water is pleasant in appearance, odor and taste. The water should be free from apparent turbidity, color, odor and from any objectionable taste. Water meeting the above criteria is termed **potable**, meaning that it is safe to drink.

The driving force for water treatment finds its roots in the work of Dr. John Snow who related a disease outbreak to a contaminated London water source in the mid 19th century. Snow is credited with taking bold action when he sensed that contaminated water from the public drinking water pump on Broad Street was the cause of a deadly cholera outbreak in London in 1854.

On the night of August 31, 1854, what Snow later called "the most terrible outbreak of cholera which ever occurred in the Kingdom," broke out. During the next three days, 127 people living in or around the Broad Street drinking water pump died. By September 10th, the number of fatal attacks had reached 500. The main reason the death toll did not rise even higher was because of Dr. John Snow's bold actions after identifying the source of the cholera outbreak.

Dr. Snow's investigation led him to a pump on the corner of Broad and Cambridge Street, the center of the epidemic. "I found," he wrote afterwards, "that nearly all the deaths had taken place within a short distance of the pump." In fact, houses closer to another pump had only suffered ten deaths, and of those, five victims had always drunk the water from the Broad Street pump. Three were schoolchildren who had probably drunk from the pump on their way to school.

Dr. Snow was convinced that the well water was the source of infection. He took his findings to the Board of Guardians of St James' Parish, in whose parish the pump was located. Though they were reluctant to believe him, they agreed to remove the pump handle as an experiment. Once the pump handle was removed the spread of cholera dramatically ended. At the end of September the outbreak was all but over, with the death toll standing at 616.

What could have caused the Broad

Street well to become contaminated and result in so many deaths? One theory is that seepage of fecal matter through the decayed brickwork of a cesspool to the well that was less than three feet away was the cause source of the contamination. But, the cause of the outbreak was clearly waterborne and Dr. Snow identified with a microscope "white, flocculent particle" from a sample of the contaminated Broad Street well water as the infective agents. He did not know it at the time, but he had correctly implicated bacteria at the culprit.

Over the next few decades, an indicator for the microbiological quality of water was developed. These bacteriological tests determine whether pathogenic organisms may be present by testing for certain **indicator organisms**.

The potential for waterborne disease increases when water is polluted with fecal matter. Polluted water may contain pathogenic (disease-causing) fecal bacteria, viruses, or other microorganisms. Testing for all pathogens is complex and expensive, so the normal practice is to look for indicator bacteria. The indicator organisms are the coliform group of bacteria. Appendix 1 lists Alaska laboratories certified for microbiology and chemical testing of drinking water.

By the early 20th century, the United States Public Health Service (PHS) had established bacteriological standards for drinking water. By the mid 20th century, the PHS water quality standards were revised to include various chemical constituents as well as bacteriological indicators. This was significant since it extended the concern over water quality from waterborne disease to long-term **toxicological** (and eventually **carcinogenic**) effects from long-term ingestion.

The **Safe Drinking Water Act (SDWA)** was passed in 1974. The United States Environmental Protection Agency (USEPA) was mandated to identify substances present in drinking water that have adverse public health affects. As a result, national interim primary drinking water regulations were established by the USEPA in 1977. In 1979, a group of chlorination by-products known as **trihalomethanes (THM's)** were also regulated. In 1986, with passage of the amendments to the SDWA, the USEPA was mandated specifically to regulate microbiological constituents, inorganic and organic compounds, and radioactivity to better safeguard public health.

The SDWA Amendments of 1996 established a new charter for the nation's public water systems, the States, and the USEPA in protecting the safety of drinking water. The amendments included, among other things, new prevention approaches, improved consumer information, changes to improve the regulatory program, and funding for States and local water systems. Congress intended that the SDWA would be a partnership between the States, the USEPA, and local water utilities. The USEPA provides the overall national guidance by determining health effects and establishing standards for contaminants, researching treatment technologies for contaminants, and monitoring State programs.

Alaska, by accepting primary

enforcement responsibility (**primacy**) implements the law within the State. Water utilities have to meet the requirements of the law, thereby providing the day-to-day surveillance of the water supplies.

1.2 Source Water

Source water is generally classified as **surface water** or **groundwater**. However, some groundwater may be classified a Groundwater Under Direct Influence of Surface Water (GWUDISW).

Surface water is all water on the surface, as distinguished from subsurface water or groundwater. Surface water is usually water that is found in a river, lake, or other surface impoundment. The area that surface water flows from is called a **drainage basin**. With a surface water source this drainage basin is called the **watershed** (Figure 1.1). The area of a basin is commonly measured in square miles, sections or acres. The area that contributes water to the groundwater supply is called the **recharge area**.

Surface water is open to the atmosphere and is subject to overland flow making it easily contaminated by animal wastes, pesticides, insecticides, industrial wastes, algae and many other organic materials.

A contaminant is any biological, chemical, physical, or radiological substance or matter in water. As related to water, contamination is the introduction into water of toxic materials, bacteria, or other deleterious agents that make the water unsafe for its intended use. Even surface water found in Alaska's pristine mountain streams might be contaminated with *Cryptosporidium*, *Giardia* or coliform bacteria from wildlife feces, and should be boiled or disinfected before drinking.

Groundwater is water that fills space between rocks and soil particles underground, in much the same way as water fills a sponge. It is trapped beneath the ground. Groundwater begins as **precipitation** and soaks into the ground where it is stored in geological formations called **aquifers**. Aquifers are explained and discussed in Section 1.4 of this chapter.

Rain that soaks into the ground, rivers, that disappears beneath the earth, and melting snow are a few of the sources that recharge the supply of underground water. Because of the many sources of recharge, groundwater may contain any or all of the contaminants found in surface water as well as the dissolved minerals it accumulates during its long stay underground. Groundwater is the principal source of water for almost all water supply systems in Alaska.

GWUDISW is defined by the USEPA in the Surface Water Treatment Rule as any water beneath the surface of the ground that has:

1. a significant occurrence of insects or other macroorganisms, algae, organic debris, or large diameter pathogens such as *Giardia lamblia*.
2. significant and relatively rapid shifts in water characteristics such as

turbidity, temperature, conductivity, or pH that closely correlate with climatological or surface water conditions.

The Enhanced Surface Water Treatment Rule amends the first item of this definition to include *Cryptosporidium*.

Direct influence must be determined for individual sources in accordance with the State of Alaska Drinking Water Regulations.

Water is an important and precious natural resource that needs to be protected and managed, whether for use as drinking water or for recreational purposes. Surface water, groundwater, and GWUDISW are susceptible to contamination. If not monitored or treated, water may be the vehicle for the spread of **infectious diseases**. The most economical way to keep treatment costs low is to protect your water source from contamination as discussed in Chapter 3, Source Water Protection and Development.

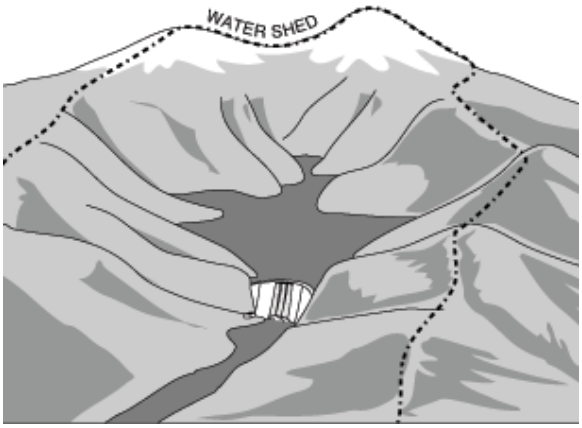

Figure 1.1: Watershed

1.3 The Hydrologic Cycle

Surface water and groundwater are part of what can be called the earth's oldest recycling program, the **hydrologic cycle**. After four and a half million years you would think the water would be all used up! It is not, because of one special process: the hydrologic cycle, more commonly called "the Water Cycle." Figure 1.2 illustrates nature's method of continuously recycling the earth's renewable water supply.

The hydrologic cycle begins with the **evaporation** of water from surface waters. As moist air is lifted, it cools and water vapor condenses to form clouds. Moisture is transported around the globe until it returns to the surface of the earth as precipitation. Precipitation can be in the form of rain, hail, sleet or snow. Once the water reaches the ground, one of three processes may occur.

1. Some of the water may evaporate back into the atmosphere,
2. The water may penetrate the surface and become groundwater, or
3. The water will become **run-off** that goes into lakes, streams, and rivers and eventually flows back to the ocean.

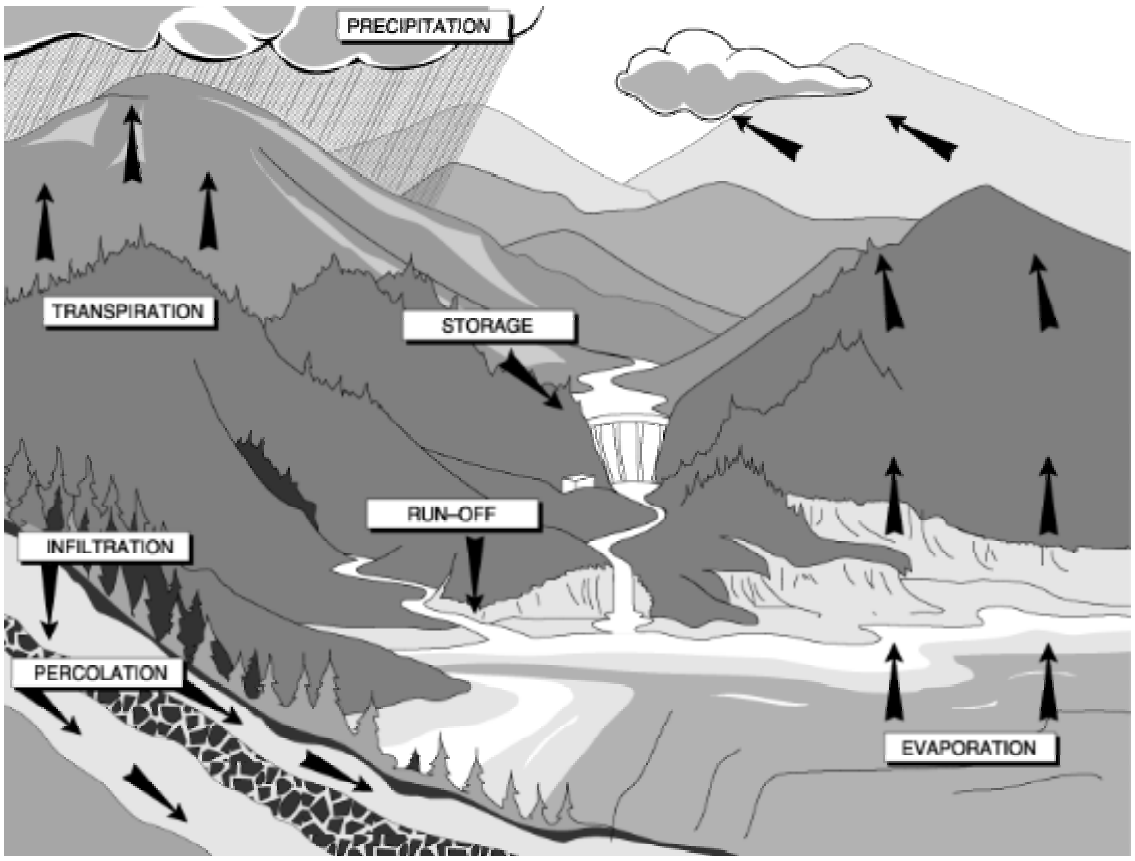

Figure 1.2: The Hydrologic Cycle

When water hits the ground, it either **percolates** through the ground or travels over land. Sometimes groundwater feeds springs, lakes, and other surface waters, or is drawn out of the ground through wells. The water can then evaporate, form clouds, and return to the earth to begin the cycle over again.

The hydrologic cycle is an important concept because it shows how the amount of groundwater available to a water well is influenced by the amount of precipitation, **infiltration**, and underground water flow occurring in a given area.

In summary, surface water and groundwater begin as local precipitation that seeps into and through the ground or becomes run-off.

1.4 Aquifers

Underground formations where groundwater exists in sufficient quantities to supply wells or springs are called aquifers, a term that literally means water bearer. Water that infiltrates the soil and is not picked up by plant roots moves downward through spaces in the soil and subsurface

material until it reaches an impervious layer of rock or clay. An impervious layer is one that is difficult for the water to seep through. The porous layer of soil above the impervious layer becomes saturated with water forming an aquifer.

Some of the water fills pores and crevices of soil and rock beneath the surface of the earth. Water percolates, or moves down, through the soil until it reaches a level where all of the available space is completely filled with water. This is called the **zone of saturation**. The water contained in this zone is called groundwater and the upper most limit of this zone is known as the **water table**.

Wells obtain their water from aquifers. A common misconception is that groundwater is obtained from underground lakes. Actually, wells tap into voids containing water below the earth's surface. Most of the rocks near the earth's surface are composed of both solids and voids. The solid parts are more obvious than the voids, but without the voids there would be no water to supply wells and springs. There are three types of aquifers:

1. Confined aquifers
2. Unconfined (or water table) aquifers
3. Springs

A **confined aquifer** is bound above and below by low-permeable material. The water-bearing materials are found between layers of impermeable material such as clay or **permafrost**. When water completely fills an aquifer that is overlaid by a confining layer, the water in the aquifer is said to be confined. Confined aquifers are also known as **artesian** aquifers. Confined aquifers generally contain water that is under a pressure greater than atmospheric pressure. If a well is drilled into a confined aquifer, the water can rise above its level in the aquifer because of the pressure exerted on the fluid by the confining layers. This is called an artesian system.

An **unconfined aquifer** may have an impermeable layer below the water-bearing strata, but there is no confining layer on top. Permeable rocks and soil directly overlie the aquifer. An unconfined aquifer may be recharged by infiltration over the whole area underlain by that aquifer, because there is nothing to stop the downward flow of water from the surface to the aquifer. If a well is drilled into an unconfined aquifer, the water will rise in the well to the same height as the water table in the aquifer. Figure 1.3 illustrates a confined and unconfined aquifer.

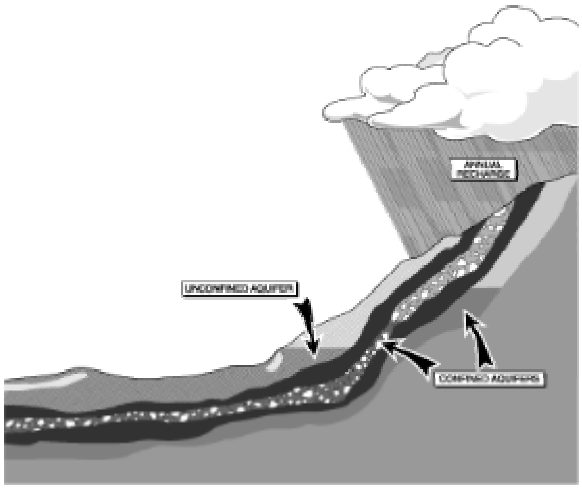

Figure 1.3: Aquifers

Consequently, the water-bearing material can fill up with water until the water level reaches the surface. The top of the water level in an unconfined

aquifer is called the water table. Therefore, unconfined aquifers are sometimes called water-table aquifers.

An opening in the ground surface, from which groundwater flows, is a **spring**. Groundwater becomes surface water at springs or at intersections of a water body and a water table. Water may flow by force of gravity from water-table aquifers, or be forced out by artesian pressure.

1.5 Water – The Universal Solvent

Two elements, hydrogen and oxygen, combine to form the compound we refer to as water. Each molecule of water is composed of 2 atoms of hydrogen and 1 atom of oxygen (H_2O).

Water appears to be a simple compound. However, the simple appearance of water is deceiving. The water molecule has a number of characteristics that make it unique. One of its many important properties includes being a good solvent. In fact, it is often referred to as the universal solvent because it will dissolve most anything it comes into contact with to some extent.

Water plays an important role as a chemical substance. The chemical formula for water H_2O. The two hydrogen atoms that combine with oxygen to make up the water molecule always attach to the oxygen atom at an angle of approximately 105° from each other (Figure 1.4).

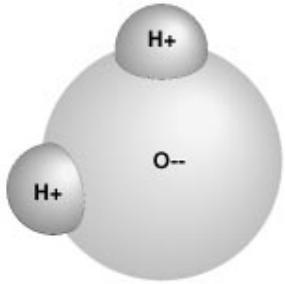

Figure 1.4: Water Molecule

The hydrogen atoms are positively charged and the oxygen atom is negatively charged. This gives the water molecule an electrical polarity; one end positively charged and one end negatively charged. The molecule's polarity is the main reason water is able to dissolve so many other substances.

Pure water contains no impurities, but in nature, water contains many dissolved and suspended elements and particles.

Recall the hydrologic cycle, where precipitation falls upon the earth and percolates down through the soil and rock layers to become groundwater. As the water falls through the atmosphere and then percolates through the earth's surface, it dissolves and attaches to many of those substances.

Consequently, natural and man-made impurities are present in all surface water and groundwater. Some impurities in groundwater, such as fluoride and calcium can be beneficial. Others, like arsenic, disease-causing bacteria and pesticides, can be harmful. Still others, like iron, color and turbidity, although not harmful to your health, can make the water less desirable to the consumer.

Various water treatment methods are used to inactivate pathogens and to remove substances that are dissolved or suspended in the water.

Water treatment methods used to make water safe to drink are discussed in Chapter 4 - Water Treatment. Water from a well supply or water sipped from a pristine Alaska mountain stream may appear clear, have no odors and taste fine, yet may have high levels of dissolved substances or tiny organisms that are not visible to the naked eye. Since it is impossible to judge the quality of the water with the eye, it is necessary to analyze the water we supply to consumers for physical and chemical properties. When it comes to drinking water, it is what you cannot see, smell or taste that might hurt you.

Chapter 2 – Source Water Quality and Characteristics

2.1 Introduction

Regardless of the source, untreated water is usually referred to as **raw water**. Occasionally, raw water will be of such high quality that no further treatment is necessary. However, most raw water sources require some type of treatment to make the **finished water** safe to drink and aesthetically pleasing to the consumer. For public water supplies, the raw water quality and characteristics generally determine the treatment requirements.

Remember the hydrologic cycle from Chapter 1? Let's follow the path of a raindrop as it hits the earth's surface. When the raindrop falls from the atmosphere to the surface of the ground, one of two things can happen. It can either flow across the surface of the ground and into a stream or lake becoming part of the area's surface water supply or it can seep into the earth's surface becoming part of an area's underground water (groundwater) resource.

Precipitation contains few impurities. Trace amounts of minerals, gases, and other substances may be picked up as the precipitation forms into clouds and falls through the earth's atmosphere, but precipitation has virtually no harmful bacteria. Keep in mind that water is a very good solvent – it will dissolve, to some extent, most everything with which it comes into contact. Consequently, once the precipitation reaches the earth's surface, many foreign substances can either be dissolved in the water or be carried along with the flow.

Groundwater picks up numerous minerals and contaminants as it percolates through the soil on its way to an underground aquifer. Surface run-off will pick up almost any mineral or contaminant it passes over and carry those contaminants into adjacent surface water supplies.

Depending on what it comes in contact with, the quality of the water may be lowered to the point that it constitutes a health hazard or impairs its usefulness. The water may then require treatment.

Based on an understanding of the hydrologic cycle and water's universal solvent properties, it is easy to see why pure water is never found in nature. These impurities contribute to the specific characteristics of any given source water and it is these water quality characteristics that determine the need for specific types of treatment.

2.2 Source Water Characteristics

As a general rule of thumb, groundwater is consistently of higher quality than surface water because it has undergone considerable natural purification through

straining and prolonged storage in an aquifer. In some cases, groundwater may be used without any treatment whatsoever or may require only disinfection. Surface water, on the other hand, may require complex treatment. Fortunately, groundwater is readily available in most areas of the state in sufficient quantities to meet the needs of most water systems. Eighty-six percent of the public water systems in Alaska use groundwater while only fourteen percent of the water systems use surface water as their source.

Surface water requires a relatively high degree of treatment because both nature and man expose surface waters to potentially severe contamination. In addition, the quality of a given surface water supply may vary considerably because of fluctuating influences such as **hydrological events** (i.e., rain storms), seasonal changes and periodic human activity.

For these reasons, surface water treatment is generally more complex and sophisticated than groundwater treatment and requires more diligent operation and maintenance. Regulatory requirements for systems utilizing a surface water source are more stringent than those utilizing a groundwater source. Not surprisingly, costs associated with surface water treatment are greater than with groundwater treatment.

To understand why certain treatment processes are necessary for small-treated water systems, owners and operators need a basic knowledge of the physical, chemical and biological characteristics of groundwater and surface water.

The following sections provide basic information on source water characteristics and are intended for operators of small groundwater and surface water systems in which only one chemical is used for treatment. There are numerous publications and textbooks that deal with advanced water treatment and water chemistry. Please contact the Operator Certification Program at ADEC or ATTAC if you are interested in obtaining more detailed information.

2.3 Physical Characteristics

There are a number of physical characteristics of water that consumers notice because they can be seen, smelled or tasted. Generally, these physical characteristics are important only from an aesthetic standpoint, but are typically the basis for many consumer complaints. Interestingly, complaints regarding the aesthetic quality of the water are generally the driving force behind the installation of water treatment devices. If drinking water looks, smells or tastes bad, it may be rejected in favor of an unsafe source that does look, smell or taste good.

Turbidity

Turbidity is caused by very small particles such as clay and silt that are suspended in the water. When water is cloudy, it is said to be turbid or have a high turbidity. Consumers will object to water that is highly turbid, even though it may be perfectly safe to drink. Removal

of turbidity not only makes the water more pleasing from an aesthetic standpoint, but it also has public health implications.

High turbidity in finished water is a potential health risk, because viruses and bacteria can "hide" within the turbidity-causing particulates making disinfection difficult. Removal of the particulates reduces the chance of pathogenic microorganisms in finished water. Inactivation of pathogenic microorganisms by chlorine, ozone, and other disinfectants is covered in Chapter 5 – Disinfection.

Turbidity is measured with an instrument called a **turbidimeter**, which reads in units called Nephelometric Turbidity Units (NTU's). Typically, for reasons mentioned above, groundwater is lower in turbidity than surface water.

Color

If water is colored, it is less pleasing to the consumer and may be rejected in favor of a drinking water source that is less safe. Color occurs most frequently in surface water due to the decay of **organic material**. In Alaska, one common source is decayed tundra vegetation which results in brownish colored water often called "tundra tea." Color can be measured in the laboratory and, generally, a measurement of 15 color units or higher is objectionable.

Taste and Odor

Tastes and odors in groundwater can be caused by the presence of hydrogen sulfide gas, organic matter and dissolved minerals, such as iron, manganese, zinc, and copper. Although these substances are generally not harmful in quantities typically encountered in most groundwater, their presence can lead to consumer complaints. Various taste rating scales have been developed, but they are very subjective and do not mean much to the individual consumer. Basically, if water tastes bad, people will not drink it.

2.4 Chemical Characteristics

Although the physical characteristics exhibited by the source water are readily discernable by sight, smell and taste, the chemical composition of water can, with a few exceptions, be determined only through chemical analysis. Consequently, laboratory testing is necessary. The importance of each chemical substance depends on the kind and amount of that substance found in the water and on the use for which the water is intended. The strictest standards apply to surface water that is being used as a public drinking water supply.

Some of the more troublesome naturally occurring chemical constituents found in Alaska waters are: calcium and magnesium (hardness), iron and manganese, hydrogen sulfide, nitrate, arsenic, sulfate and radiological contaminants.

Appendix 1 contains a list of analytical laboratories in Alaska that are certified for microbiological and chemical testing of drinking water.

2.4a Groundwater Characteristics

Groundwater moves very slowly within an aquifer. Its flow is measured in feet per year compared to surface streams where flows are measured in the feet per second range. Consequently, the water quality of any specific well is usually quite constant.

The water quality of any specific well is directly related to the chemical composition of the geological formation through which the water has percolated. As water passes through the earth's crust and travels through the aquifer, it will dissolve some of the minerals with which it comes in contact. Typically, wells drilled through the same formation will have similar chemical characteristics.

Depending on the minerals that are present, the water may have high concentrations of iron and manganese, which can cause taste, odor and color problems. The water may be very hard due to dissolved calcium and magnesium. Groundwater in areas having both high levels of iron and sulfur deposits will often have the characteristic rotten egg odor of hydrogen sulfide. Some chemical contaminants are toxic or poisonous and have direct adverse health effects. Common chemical contaminants found in groundwater are:

- Iron
- Manganese
- Fluoride
- Calcium
- Sulfate
- Magnesium
- Arsenic
- Hydrogen sulfide
- Nitrate
- Radiological contaminants

If you are considering drilling a new well you might want to talk to neighboring property owners regarding the characteristics of their water and/or consult with a local well driller. Many well drillers keep records including well yield and chemical characteristics for wells they have drilled.

The State Drinking Water Standards establish maximum amounts of chemical contaminants allowed in public drinking water. These standards are discussed in Chapter 8 – Public Water Supply Regulations & Monitoring.

2.4b Surface Water Characteristics

While groundwater quality is generally quite consistent, the quality of any given surface water supply can be highly variable and change rapidly. Consequently, more complex treatment may be required.

As mentioned earlier, surface water supplies are subject to climatic changes, seasonal disturbances, and human activity. As water flows over the surface of the earth, it dissolves and carries with it almost everything with which it comes in contact.

Substances picked up by overland flow can be classified as biological, chemical (both inorganic and organic), physical, and radiological impurities. They include industrial and commercial solvents, metal and acid salts, sediments, pesticides, herbicides, plant nutrients, radioactive materials, road salts, decaying animal and vegetable matter, and living microorganisms, such as algae, bacteria, and viruses. So, surface water supplies are heavily influenced by natural pollutants and by a wide range of man-made contaminants, as well.

Surface water quality problems are generally associated with the presence of particulate matter, color, taste, odor and microbial contaminants. **Filtration** and disinfection are usually required for treatment of surface water supplies.

2.5 Common Water Quality Indicators

Regardless of the water source, raw water is usually evaluated with respect to certain common water quality indicators or chemical constituents. The suitability of a given raw water for use as a public water supply can often be determined by evaluating these common water quality indicators. They include pH, total dissolved solids (TDS) or conductivity, hardness, alkalinity, iron and manganese, dissolved gases, and corrosivity.

2.5a pH

The acidic or basic nature of a solution is expressed as the **pH**. The pH scale (Figure 2.1) ranges from 0 to 14, with 7 being neutral. Numbers below 7 are acidic and numbers above 7 are basic.

Natural waters rarely have a pH less than 6.0 or greater than 9.0. Treated water is usually between pH 6.5 and 8.5. At values less than 6.5, water can be corrosive causing the release of toxic metals into the water from piping. Higher pHs can cause scaling or reduce the efficiency of chlorine.

A rough indication of pH can be obtained using pH paper or liquid color indicators that change color as the pH level varies. These indicators are limited in their accuracy and can be difficult to interpret correctly. A more accurate way to determine pH is by using a pH meter.

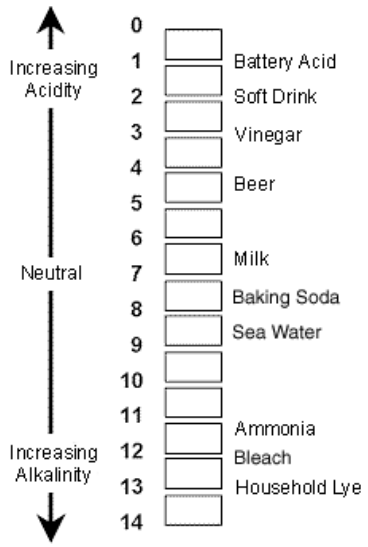

Figure 2.1: pH of Common Liquids

2.5b Total Dissolved Solids: Conductivity

Conductivity is defined as the ability of a substance to conduct electric current. There is a direct relationship between conductivity and the minerals dissolved in water (**total dissolved solids, TDS**). Therefore, conductivity can be used to estimate the TDS concentration of a specific water. It can be measured quite easily and quickly with a portable meter and is much more convenient than the TDS test which takes hours to complete.

For water treatment applications, the use of conductivity has the advantage of an almost direct relationship with impurities, especially at low concentrations. For this reason, a rising conductivity reading shows increasing impurities in the water. The draw back to conductivity is that it is a non-specific measurement; that is, it cannot distinguish between various types of minerals and the reading is proportional to the combined effect of all minerals present.

For most natural waters, conductivity multiplied by a factor which may vary between 0.55 and 0.75 will give a good estimate of the dissolved solids concentration in mg/L. Typically, groundwater will have higher TDS levels than surface water.

High TDS concentrations in drinking water can produce laxative effects and can give an unpleasant mineral taste to water. It is generally accepted that the TDS concentration of palatable water should not exceed 500 mg/L. For this reason the USEPA has established a **secondary standard** of 500 mg/l TDS in drinking water. Secondary standards are unenforceable, but recommended guidelines for contaminants that may cause aesthetic effects in drinking water. See Chapter 8 – Public Water Supply Regulations & Monitoring regarding primary and secondary standards.

2.5c Hardness

The term **hardness** may be one of the oldest terms used to characterize a water supply. The term was initially used to describe the difficulty in producing soapsuds in a particular water. Water that required a lot of soap to produce suds was termed hard water, whereas water that easily produced suds was considered soft. If you have soft water, you might notice it takes a long time to rinse the soap off your hands. Soft water reacts with soap to produce a residue that feels like it is hard to wash off.

Hardness is caused by the presence of magnesium and calcium in water. The terms soft water and hard water are relative. Water is said to be soft if it has a low concentration of calcium and magnesium, and said to be hard if it has a high concentration of calcium and magnesium (Table A).

However, numerical values for hardness have little significance for the average consumer. To an individual living in Fairbanks, water with a hardness of 100 mg/L may seem soft while someone

from Southeast Alaska, where waters tend to be extremely soft, may think the same water is very hard. Typically, groundwater is harder than surface water

Hard water can lead to calcium carbonate ($CaCO_3$) scale in hot water heaters and boilers. Low hardness contributes to the corrosive tendencies of water.

Water hardness is expressed in milligrams per liter (mg/L) of $CaCO_3$. Hardness can also expressed in grains per gallon (gpg); 1 gpg = 17.1 mg/L.

Soft water	0-75 mg/L
Moderately Hard	75-150 mg/L
Hard	150-300 mg/L
Very Hard	Over 300 mg/L

Table A: Hardness Scale

Hardness is not considered a health hazard. However, at levels of 200-300 mg/L or higher, it is common practice to soften the water for household use. In small systems water is usually softened by the ion exchange process.

2.5d Alkalinity

Alkalinity is defined as the capacity of a water to resist pH change. The term “to buffer” is used to describe this process. So water with significant alkalinity can buffer or resist pH change. Since a stable pH is desirable for smooth and consistent performance of several treatment processes, it is desirable to have significant alkalinity. Alkalinity of about 80 mg/L will provide adequate buffering capacity.

Most of the alkalinity is provided by carbonate and bicarbonate compounds. Alkalinity is expressed as mg/L of $CaCO_3$. Typically, groundwater will have adequate alkalinity but surface water sources usually have very low alkalinity and the pH can easily change. Alkalinity does not pose a health risk.

2.5e Iron and Manganese

Iron and manganese are common metals found in the earth’s crust. Water percolating through soil and rock can dissolve minerals containing iron and manganese and hold them in solution.

Iron will cause reddish-brown staining of laundry, porcelain, dishes, utensils and even glassware. Manganese causes a brownish-black stain. Soaps and detergents do not remove these stains, and the use of chlorine bleach may intensify the stains. At elevated levels, iron and manganese deposits may build up in pipelines, pressure tanks, water heaters and water softeners. These deposits reduce the flow and pressure in water supply lines. Iron and manganese accumulations become an economic problem when deposits become serious

enough to require replacement of piping and treatment equipment.

Many groundwater supplies in Alaska have high levels of iron and manganese. Iron and manganese removal is one of the most common types of municipal water treatment in Alaska. The **Secondary Maximum Contaminant Level (SMCL)** for iron is 0.3 mg/L and 0.05 mg/L for manganese. These levels correspond to approximate concentrations at which iron and manganese will cause aesthetic problems such as colored water, turbidity, staining, and bad taste.

2.5f Dissolved Gases

Gases, as well as minerals and organics, can be easily dissolved by water. Groundwater usually contains more dissolved gases than surface water. Gases frequently found in both raw water and treated water include oxygen, carbon dioxide, methane, hydrogen sulfide, and radon. Some of these gases dissolved in water can cause significant problems including objectionable taste and odor, **corrosion**, and health and safety concerns.

Troublesome dissolved gases can usually be removed by aeration, which exposes the gases to the atmosphere until the concentration of the gas in the water is in equilibrium with the concentration of the gas in the atmosphere.

Oxygen (O_2)
Well-oxygenated water is usually desirable because it gives water a pleasant, fresh taste. In the absence of dissolved oxygen (under **anaerobic** conditions) water may support the growth of bacteria that produce foul smelling methane and hydrogen sulfide. However, on the negative side, when corrosive conditions already exist, excess oxygen can increase the corrosive tendency of water.

Carbon Dioxide (CO_2)
CO_2 is highly soluble in water and is commonly found in excess in Alaskan groundwater supplies because of the cold temperatures of the groundwater. Although CO_2 does not pose a health risk it can contribute to operational problems for water systems.

Dissolved CO_2 increases the acidity of water, which increases corrosive tendencies. Excess CO_2 may keep iron in solution, making iron removal more difficult and CO_2 can consume more lime when it is being used for pH adjustment. Aeration can effectively reduce the concentration of CO_2 in water.

Methane (CH_4)
CH_4 , often called “swamp gas,” is frequently found in groundwater supplies located near natural gas deposits. It is produced by the decay of organic material buried in old river channels under permafrost. When dissolved in water, CH_4 can make the water taste like garlic. CH_4 poses an explosion hazard if it is allowed to accumulate in an enclosed space.

Hydrogen Sulfide (H_2S)
Although H_2S gas is associated with groundwater supplies more often that

with surface waters, it can also occur in lakes and reservoirs under ice cover in winter. It produces the offensive rotten egg or sulfur water odor and taste found in some groundwater and can affect the taste of coffee, ice cubes, and many foods prepared with water containing it. Silverware washed in water containing H_2S can turn black. In some cases, the odor may be noticeable only when the water is initially turned on or when the hot water is used. Heat forces the gas into the air that may cause the odor to be especially offensive in a shower. Occasionally, a hot water heater is a source of H_2S odor.

H_2S is a corrosive gas that forms sulfuric acid, which is corrosive to metals such as iron, steel, copper and brass. High concentrations of dissolved H_2S also can foul the resin bed of ion exchange water softeners. Finally H_2S is a poisonous gas that can be hazardous if it accumulates in high concentration in a treatment plant.

Radon (Rn)
Radon is a pure elemental, **radioactive** gas that is suspected to be a carcinogen (cancer-causing agent). It is a natural decay product of uranium and is present at unacceptable levels in many groundwater supplies in Alaska. Radon must be removed from drinking water because of the potentially extreme health risk associated with it. Radon is released from showers, washing machines and other plumbing fixtures and can concentrate in enclosed spaces, creating an inhalation hazard.

2.5g Corrosivity

Corrosivity can be defined as the tendency of water to dissolve metal. It can affect metal structures and equipment, such as pipes, valves and pumps parts. Water that has a strong tendency to do this is said to be highly corrosive, water that does not do so readily is said to be weakly corrosive or non-corrosive.

Highly corrosive water (water having high corrosivity) poses both a health hazard and an economic burden. Undesirable metals dissolved by corrosive water may be detrimental to health. An example of this is lead and/or copper dissolved in water as a result of the corrosive action on copper pipes and lead-based solder. If corrosion goes unchecked metal pipes and equipment will be severely damaged or destroyed. Replacement of corrosion damaged material and equipment can be very costly.

Corrosion is an extremely complex phenomenon. Corrosion is affected by five water quality parameters; pH, hardness, alkalinity, temperature, and total dissolved solids (TDS). Of these, pH has the greatest influence. Generally, the lower the pH the more corrosive the water will be. The presence of hardness and alkalinity tends to lessen the corrosivity, so water with higher hardness and alkalinity are usually less corrosive that water with lower hardness and alkalinity. TDS and temperature are less important, but an increase of either one tends to increase corrosivity.

As a general rule, surface water sources are more corrosive that groundwater sources. This is due to the fact that most surface water sources have low pH, low hardness, low alkalinity, and low TDS, whereas groundwater tends to be just the opposite; higher pH, higher hardness, higher alkalinity and higher TDS.

Since pH has the greatest impact, corrosivity can be controlled by the addition of chemicals to raise the pH. As it happens, the most common chemicals used to raise pH (lime and soda ash) also increase hardness and alkalinity, which help reduce corrosivity.

Corrositivity is considered a secondary contaminant with a SMCL of "noncorrosive." The Langlier Saturation Index, (LI) which takes into consideration pH, total dissolved solids, hardness, alkalinity, and temperature, is commonly used to determine if water is corrosive or not. The analytical lab doing your water tests can determine your LI.

2.6 Biological Characteristics

A variety of different organisms are routinely found in raw water sources. These include tiny microorganisms, such as bacteria, protozoa, and viruses, and a variety of visible organisms, such as algae, fresh water shrimp, and snails.

Most do not pose a health risk, but as you recall from the description in the introduction to this manual of the London cholera epidemic, the presence of some microorganisms in drinking water can be devastating. In fact, providing drinking water that is microbiologically safe is the primary goal of all water providers.

As a general rule, surface water sources are more likely to contain greater numbers and more diverse populations of microorganisms than groundwater sources. This is because surface water can easily pick up microorganisms from contaminated areas as it flows across the earth's surface. On the other hand, the filtering action of aquifer material results in fewer microorganisms in groundwater. However, shallow wells and unprotected wellheads can provide an opportunity for contaminated surface water to enter the groundwater. Consequently, groundwater cannot be assumed to be free of microorganisms either.

Disease-causing organism are called **pathogens**. Water-borne pathogens include bacteria, protozoa and viruses. These pathogens can be transmitted from person to person through fecal contamination of drinking water. Consequently, disinfection is generally required for surface water sources and may be necessary for groundwater sources if they become contaminated.

Bacteria are single-celled organisms ranging in size from 0.5 - 2 **microns** in diameter and about 1-10 microns long. A micron is a metric unit of measurement equal to 1 thousandth of a millimeter. To visualize the size of bacteria, consider that it would take approximately 1,000 bacteria lying side

by side to reach across the head of a straight pin. They are among the most common microorganisms in water. Typhoid fever and cholera are examples of bacterial waterborne diseases. Most bacterial pathogens are easily controlled with normal disinfection processes.

Protozoa are single-celled organisms, several hundred times larger than bacteria. They range in size from 4 microns to 500 microns. Two species of protozoa, *Cryptosporidium* (Figure 2.2) and *Giardia lamblia,* (Figure 2.3) have been found to be the cause of waterborne gastrointestinal disease outbreaks in the United States. Both have been found in Alaskan waters. Protozoan go through a life cycle, one phase of which results in an extremely resistant form that makes them very difficult to control with normal disinfection.

Viruses are extremely tiny microorganisms (hundreds of times smaller than bacteria) that live parasitically inside other cells. Pathogenic viruses are responsible for many waterborne diseases such as viral gastroenteritis, smallpox, poliomyelitis (polio) and infectious hepatitis. The common cold is caused by viruses, but they are not transmitted by water.

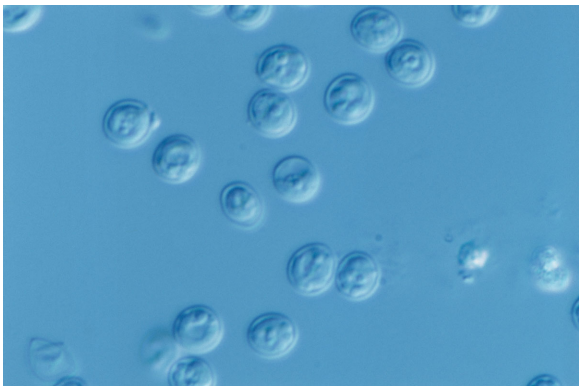

Figure 2.2: *Cryptosporidium*

Figure 2.3: *Giardia*

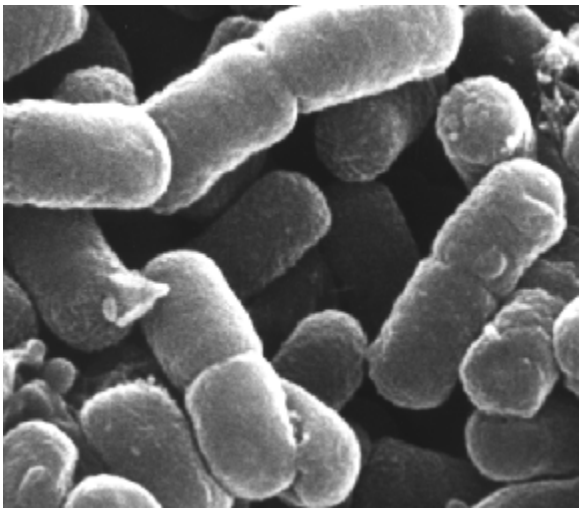

Figure 2.4: *E. coli*

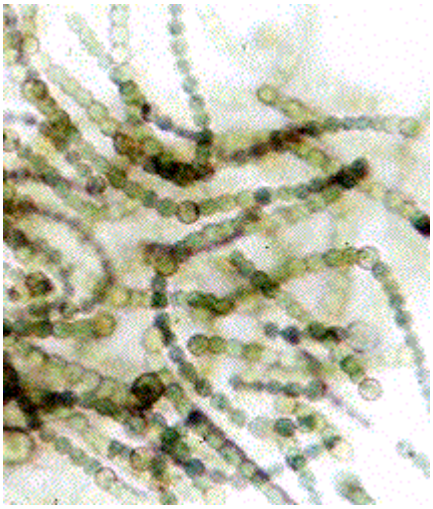

Figure 2.5: Cyanobacteria

2.7 Other Organisms Found in Water Sources

Algae, small aquatic, plant-like organisms are frequently found in surface water supplies but not in groundwater because they require sunlight to survive. Algae contribute to taste and odor problems in finished drinking water. These problems are caused by natural chemicals produced by the algae and by chemicals released when algae cells die.

Not all organisms found in freshwater supplies are microscopic. Do not be surprised to find small, animal-like organisms is both surface and groundwater supplies. Freshwater shrimp, crustaceans, arthropods, and other “critters” are occasionally present.

If they are present in unusually large numbers, the chemicals released when they die can cause taste and odor problems. Otherwise, they are simply a nuisance, plugging screens and filters.

Iron bacteria
One special group of bacteria, iron bacteria, causes problems with water supplies. If iron is present, it will promote the growth of these bacteria. Iron bacteria metabolize iron and will flourish when iron levels are high. During this metabolic process the bacteria will produce by-products that give the water a metallic taste.

Iron bacteria can also cause “red water,” clog well screens and reduce water production. If reddish or green slime builds up in your toilet flush tank you probably have an iron bacteria problem.

Iron bacteria problems are very hard to eliminate. High dosages of chlorine must be used throughout the plumbing system to kill all of the bacteria. It may be necessary to feed chlorine continuously to prevent regrowth. A filter alone will not solve this problem.

Chapter 3 – Source Water Protection and Development

3.1 Introduction

"An ounce of prevention is worth a pound of cure." This old saying can also apply to protecting your water source. The best way to keep water safe to drink and, at the same time, treatment costs low, is to prevent contaminants or pollutants from getting into the source water to begin with.

Protecting the quality of your source water should be a major concern because it is expensive to remove contaminants from water. Source water protection is probably the most cost-effective way of assuring safe and aesthetically pleasing drinking water. Often, it is cheaper to abandon a contaminated groundwater source and develop a new one than pay expensive treatment costs to remove contaminants.

For surface water, the characteristics of the watershed determine both the quality and quantity of the raw water from that particular area. For groundwater, it is the characteristics of the recharge area that determines the quality and quantity of water.

Congress adopted amendments to the SDWA that require states to develop and implement a program to protect the water sources of public water systems. In Alaska, a single program, known as the **Drinking Water Protection Program (DWPP)**, was developed to implement these amendments. The DWPP includes three components:

- Source water assessments
- Groundwater protection
- Wellhead protection

The first step in implementing the DWPP is the source water assessments, which identify and prioritize potential contamination risks. Owners, operators, and consumers can then implement appropriate protection efforts.

Water systems in Alaska may range from large municipal systems having many interconnected wells, or a vast watershed, to very small systems with a single well, serving, for example, a rural diner. Regardless of the size or complexity of the system, the quality of the raw water source is critical, and the best way to assess and maintain that quality is through the implementation of the DWPP.

3.2 Source Water Assessment and Protection

Both natural and human factors influence the quality of a water source. In order to effectively manage the quality of a source water, you must first identify those factors that can affect the source water quality. The degree of impact of the factors varies depending on the source involved. Surface water,

for example, is generally more vulnerable to human contamination than groundwater because of the direct exposure to human activity. Oil spills or chemical releases may be contained or isolated in the case of surface water, presenting only temporary problems, but once present in the aquifer they may persist for decades.

A source water assessment is a study and report that provides basic information about the area and activities that can affect your drinking water source.

Delineation areas are used to identify recharge areas that must be controlled to protect the quality of water. These areas are referred to as Wellhead Protection Areas or Source Water Protection Areas.

In order for the state to assess the vulnerability of your drinking water source to existing and potential sources of man-made contaminants, Class A Public Water Systems (PWS) may be asked to provide information to the state, such as:

- A copy of your well log(s)
- Maps or other information, such as latitude and longitude, which are used to establish the location of your drinking water source(s)
- The rate of production of your drinking water source(s)
- A list of existing and potential sources of man-made contaminants within your drinking water protection area
- Photographs of each wellhead, spring, or surface water intake
- Photographs of the area surrounding each wellhead, spring, or surface water intake

The final Source Water Assessment Report you receive will describe the potential vulnerability of the source water protection area for your drinking water source. The information will be provided to the PWS owner and/or operator, local governments, regulatory agencies, communities, and the public to help in planning and coordinating protection efforts. The assessment report is a tool that you can use to help protect your public drinking water supply.

For more information regarding Source Water Assessment and Protection programs in Alaska, contact your local ADEC field office.

3.3 Wellhead Protection Program

Whether a well taps an aquifer just below the surface or hundreds of feet deep, its location on top of the ground is a crucial safety factor. Locating a well in a safe place takes careful planning and consideration of factors such as where the well is in relation to surface drainage and groundwater flow. A well downhill from a dog team yard, a leaking fuel tank or a septic system runs a greater risk of contamination than a well uphill of those types of pollution sources.

A wellhead protection program is a way to actively protect both your drinking water resources and your capital

investment. A wellhead protection program is designed to prevent contamination in and around the area of the well and consequently, reduces the likelihood that the well will become contaminated.

The State of Alaska included the wellhead protection plan in their Source Water Assessment Program. In each assessment, the State compiles an inventory of land uses and sites that constitute threats to drinking water quality. When the State completes each source water assessment and provides the report to the owner of the PWS, the owners can then use it to design their own wellhead protection plan.
In order to help protect your wellhead from contamination, the State of Alaska requires that a public water system maintain minimum separation distances between potential sources of contamination and a drinking water source (refer to Table B).

Groundwater, in its natural state, is generally safe to drink. But groundwater is never completely pure. Minerals, organics, or pathogens can easily move with water as it travels down through the soil. Gasoline, diesel fuel, or other chemicals from leaking underground storage tanks may seep through the soil and into groundwater. Some sources of groundwater contamination you may want to be aware of that may threaten human and animal health, as well as the environment, include:

- Human and animal wastes from septic tanks, lagoons, and other waste storage and treatment facilities
- Any chemicals that are poured down household sinks
- Landfills
- Leaking underground storage tanks
- Fuel pipelines
- Abandoned vehicles
- Saltwater encroachment in coastal areas
- Improper use of fertilizers and pesticides

Minimum Separation Distances Between Drinking Water Sources and Potential Sources of Contamination (measured horizontally in feet)	
Potential Sources of Contamination	**Class A & B Public Water Systems**
Wastewater treatment works, wastewater disposal system, pit privy, sewer manhole, lift station, cleanout.	200 feet
Community sewer line, holding tank, other potential sources of contamination.	200 feet
Private sewer line, petroleum lines and storage tanks, drinking water treatment waste.	100 feet

Table B: Minimum Separation Distances

3.4 Well Decommissioning (Abandonment)

An abandoned well that has not been properly **decommissioned** is a serious threat to an aquifer. An open well casing serves as a direct route for surface contaminants to enter the aquifer. The contamination of an abandoned well may contaminate an aquifer and thereby contaminate nearby wells making them unusable. A contaminated aquifer is difficult to impossible to decontaminate.

Check for unused wells that may be on your property or close to your water source. Abandoned wells that are not properly sealed can cause loss of artesian pressure, as well as contamination. Alaska's well decommissioning standards are designed to prevent contamination of the well or aquifer from surface and subsurface leakage that may carry harmful chemicals or bacteria to the water you drink. ADEC has minimum standards that describe acceptable methods for permanent well abandonment.

A well is considered temporarily abandoned when it is taken out of service but still exists. Owners of a temporarily abandoned well intend to bring the well back into service at a future date. A watertight cap or seal that prevents any materials from entering the well must cover temporarily abandoned wells. Locking well caps provide extra security.

A well is considered permanently decommissioned, or abandoned, when it is completely filled in, so that movement of water within the well is permanently stopped. The appropriate permanent abandonment method depends on information obtained from an examination of the well log and an onsite investigation of the well.

Generally, drilled wells with steel or plastic casing are permanently decommissioned by removing or ripping the casing and filling the borehole with cement from the bottom up. Any pump, wiring, or debris in the well must be removed before the cement is placed in the bore hole.

However, the method for abandonment must conform to ANSI/AWWA Standard A100-97. Contact the local ADEC office for abandonment procedures.

3.5 Water Rights

A water right is your legal right to use surface or groundwater under the Alaska Water Use Act (AS 46.15). A water right establishes your right to use the groundwater or surface water resource and your seniority subsequent to any future water right applications. A water right allows a specific amount of water from a specific water source to be diverted, impounded, or withdrawn for a specific use.

When a water right is granted, it becomes an **appurtenance** (a right or privilege) to the land where the water is being used for as long as the water is

beneficially used. If the land is sold, the water right transfers with the land to the new owner, unless the **Department of Natural Resource (DNR)** approves its separation from the land. An owner can decide to sell, or not sell, the water right with the land.

In Alaska, because water is a common property resource, landowners do not have automatic use rights to groundwater or surface water. For example, if you have a creek running through your property, you need a water right to protect your use of the water. Using water without a patented water right does not necessarily give the user a legal right to that water.

To obtain water rights in Alaska, you must submit an application to the DNR office in your area. After your application is processed, you will be issued a permit. Once you have determined the full amount of water that you will use beneficially and have complied with all of the permit conditions, a certificate of appropriation will be issued. This is the legal document that establishes water rights.

3.6 Source Water Development

Most small systems in Alaska utilize groundwater as their source. However, in areas where groundwater is not readily attainable or of questionable quality or quantity, a surface water source may be developed to supply the needs of the system. Regardless of the water source, the source must be properly developed in order to protect water quality and ensure that treatment requirements are minimized.

3.7 Surface Water Development

Lakes, ponds, rivers and streams are all occasionally used as source waters for small systems. However, considerable effort is required to develop and maintain surface water intakes and raw water transmission lines. Consequently, the use of surface water as a source for small, treated systems in Alaska is limited. However, if suitable groundwater resources are not available, the system may be forced to develop a surface water source or, perhaps, use rainwater catchment structures.

Very small, seasonal operations may use a surface source. Systems located in the Southeast Alaska, where groundwater resources are limited and freezing is less likely, may also use surface water.

Water quality standards are the primary concern when developing surface water as the source. These standards include the physical, chemical, biological, and radiological quality of the water. Surface water of low quality is expensive to treat. Surface water systems must also meet strict standards when used as a public drinking water source. In selecting a surface water

source, there are some other items you should consider besides quality:

- The distance from your distribution system
- Elevation
- Rainfall
- Area of watershed
- Type of soil
- Activities occurring in the watershed
- Sources, types and amount of polluting material entering the surface water
- Ownership and control of the watershed

If a source water protection plan has been completed on a water system near the source you plan to develop, most of these items will be addressed and that plan will be valuable in helping you decide if the development is worthwhile.

Determining acceptable quality and quantity levels and evaluating distance of the surface water source from the area to be served can help determine costs. After establishing **parameters** for quality and quantity of the surface water, the next concern is the raw water collection and transmission.

Impoundments, or raw water storage reservoirs, can be natural or man-made. An impoundment may be a pond, lake, tank or basin that is used for storage and flow control of the raw water. Man-made impoundments are built across a waterway to control the flow or raise the level of water and serve as the location for the raw water intake structure. An impoundment may be built for storing raw water to meet peak demands. An impoundment might be built by piling rocks across a stream or by constructing a wooden or cement dam. Damming the water slows the velocity (speed) of the water. An advantage of slowing the water flow is that heavier particulates and sand naturally settle out. This helps lower the turbidity of the raw water, improves water quality and, in some cases, lowers treatment costs.

The next step is installing an **intake structure**. An intake structure is a device placed in a surface water source to permit the withdrawal of water from the source. Intake pipes are used to collect the raw water and move it by gravity or by pumping to an intake well or water plant. Intake pipes located within impoundments have screens, bars, or both to prevent fish, leaves, sticks or other large debris from entering the intake well or piping system. The most common intake structure used by small systems is a Johnson screen (Figure 3.1).

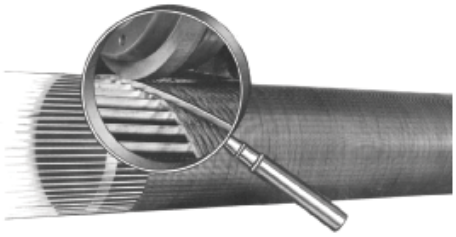

Figure 3.1: Johnson Screen

Some water systems collect their surface water by burying perforated pipe in a shallow stream or beneath a riverbank. The perforated pipe is covered with a sand or gravel. As the raw water percolates through the sand or gravel, sand, leaves and larger particulates are strained from the water. Straining the water through the sand or gravel decreases turbidity and improves water quality. This type of intake structure is referred to as an infiltration gallery (Figure 3.2).

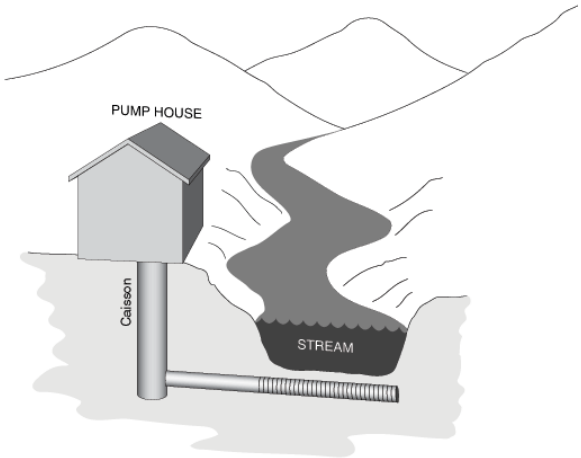

Figure 3.2: Infiltration Gallery

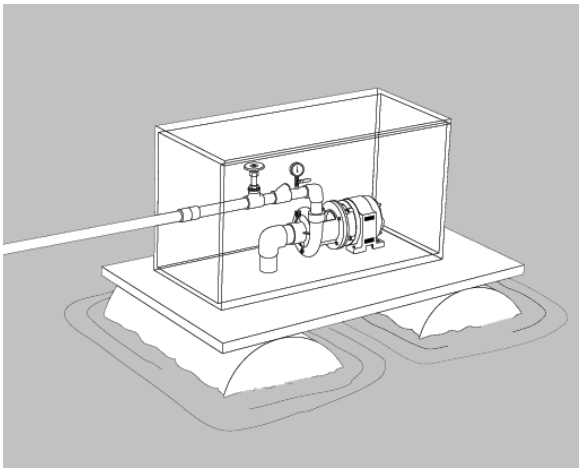

Figure 3.3: Floating Intake

Mounting an end-suction centrifugal pump or submersible pump on a float in a river or pond is sometimes used (see Figure 3.3). Water is pumped from the river or pond to a raw water collection well or to the plant. The intake is tied to the bank or shore to keep it from being carried away.

Intakes should be inspected on a regular basis. Leaves, sticks and large debris must be removed to ensure that water can flow to the pump. Centrifugal pumps may be damaged if the intakes are choked off by debris that restricts or stops the flow of water to the pump.

Once the intake method for the raw water is established, a transmission system is needed to carry the raw water to the plant. The size of the transmission piping is determined taking into consideration both the amount of water needed and the amount available at the source. Valves are placed in the transmission piping system to isolate the distribution system in case the raw water source becomes contaminated. Valves are also used to divert water for special needs and to isolate portions of the lines during repair or construction.

3.8 Groundwater Development

Water well drillers have local knowledge of groundwater conditions and experience with state regulations. They can help you select your well site. The contractor must choose a well site so that potential contaminants from known nearby pollutant sources are avoided and construct the well in a way that surface pollutants cannot reach the aquifer. There are certain minimum requirements, which must be met in constructing and developing wells, springs, and treatment facilities. ADEC must issue a permit before construction is begun.

One of the main considerations in locating your well is convenience. If conditions allow, try to locate the well close to where you will use the water and near a power source. The further away the source water is from the

service area, the greater your costs will be to build and operate the water system.

Applying the following standards during siting and placement of your well will save you money:

- Locate the well away from septic tanks, sewage disposal area (such as drainfields), and other sources of contamination such as storm sewers, privies, or refuse dumps (refer to Table B for minimum separation distances).
- Identify potential contamination sources that are found in agricultural, commercial, residential, industrial, or undeveloped areas.
- Provide for drainage away from the well on all sides; divert up-slope drainage away from hillside wells.
- Locate the well up gradient of disposal areas if possible.
- Locate the well far enough from buildings to allow easy access during maintenance, repair, testing, or redevelopment. Remember to plan future well construction or repairs before building a shelter around the well.
- Locate the well in an area free from flooding or plan extra precautions to protect it.
- Site your well as far as possible from neighboring wells. When wells are close together, they can interfere with each other and may produce less water.

ADEC's well construction standards are designed to protect your groundwater resource and the public health. The standards are intended to help prevent contamination of the well or aquifer from surface and subsurface leakage that may carry harmful chemicals or bacteria to the water source, and prevent physical injury and waste of water.

Well construction is one of the most important aspects of source development. Owners and operators need to have a basic understanding of well construction techniques, components, terminology and maintenance.

3.9 Well Types

A well is a hole in the ground that penetrates down into an aquifer. A pump and pipe are used to pull water out of the well, and a screen filters out unwanted particles that could clog the pump and pipe.

There are four major types of wells constructed in Alaska: dug wells, sand point or driven wells, bored wells, and drilled wells.

A **dug well** is a large-diameter hole (usually more than 2 feet wide), which is often constructed by hand. Most dug wells were either built before drilling equipment was available or because drilling was considered too expensive. Modern dug wells are typically lined with concrete tile and have a large diameter, which provides a big opening to the aquifer. The large diameter allows water from aquifers made of very fine sand, silt, or clay, to easily enter well. Dug wells pose the highest risk of contamination because they are shallow

and often poorly protected from surface water.

Driven (sand point) wells, pose a moderate to high risk of contamination. They are constructed by driving assembled lengths of pipe into the ground. Driven wells are normally smaller in diameter (two inches or less) and less than fifty feet deep. These wells are relatively simple and economical to construct, but they can only tap shallow aquifers and, similar to dug wells, may be easily contaminated. They can only be installed in areas of relatively loose soils, such as sand or sandy gravel.

Bored wells are constructed with a large auger. The depth of a bored well is usually about 50 to 70 feet, and is commonly constructed in soft materials such as sand, silt, clay, and soft rock. Contamination risk is similar to driven wells.

All other types of wells, including those constructed by a combination of jetting and driving, are considered **drilled wells**. These wells can be more than 1,000 feet deep. Wells that penetrate material that is not hard and solid require a casing and a screen to prevent the inflow of sediment, which could cause the well to collapse.

3.10 Well Components

The components that make up a well system include the well itself, the well house or building, the pump, and related piping system. Many components of a well cannot be observed. Components that make up the well itself are discussed in this section. Many of these components are shown in Figure 3.4.

Well Casing
The well begins as a hole in the ground called the borehole. During construction, the well driller installs in the **borehole** a steel or plastic pipe called the well casing. The borehole is protected from collapse by the casing. The well casing provides a column of stored water and a housing for the pump mechanisms and **discharge pipe**. The well casing also prevents contaminants (either surface or subsurface) from entering the water source. The well casing must extend a minimum of twelve inches above finished grade.

Casing Vent
When is being pumped up out of a well, the water level in the casing drops. This can create a vacuum inside the well casing. A vent allows air into the casing preventing the vacuum condition. The vent should terminate a minimum of eighteen inches above the floor/ground with a bend pointing downward at or above the top of the casing. The opening of the vent should be screened. The screen must be small enough to prevent entry of insects.

Sanitary Seal
To prevent contamination of the well, a sanitary seal is placed on the top of the casing. The type of seal varies depending upon the type of pump used. The sanitary seal may have openings for power and control wires, pump support cables, a draw down gauge, discharge piping, pump shaft, and air vent, while providing a tight seal around each of them.

Electrical Cable
If a **submersible pump** is being used, a waterproof electrical cable extends from the top of the unit down the inside of the casing to the pump's electric motor. The submersible electric motor is attached to the lower end of the pump assembly. Generally, the cable is secured to the drop pipe.

Well Pad
The well pad provides a ground seal around the casing. The pad is constructed of reinforced concrete 6 feet by 6 feet (6 in thick) with the wellhead located in the middle and the pad sloped away from the wellhead. The well pad prevents contaminants from collecting around the well and seeping down around the casing.

Grout
The **annular space**, the space between the borehole and well casing, or between an inner and an outer casing**,** presents a direct pathway for contaminants to enter a well. Sealing the annular space helps prevent this contamination. **Grouting** is required by regulation.

A cased well must be grouted with a watertight cement grout, sealing clay, bentonite, or an equivalent material. Grout, in liquid form, is pumped into the annular space where it solidifies. There must be at least ten feet of continuous grouting within the first twenty feet below the ground surface. ADEC Drinking Water Regulations 18 AAC 80 also allows alternate methods of grouting.

Pitless Adapter
A pitless adapter is a unit designed to permit water service pipes to pass through the wall of the well casing below the frost line. It also prevents entrance of contaminants and allows unobstructed access to the inside of the casing and the components within the well.

Installation of a pitless adapter requires cutting a hole in the side of the well casing below frost line. A fitting to accommodate the pump discharge line inside the casing is inserted into the opening in the well casing. The other part of the pitless adapter connects to the distribution pipe or service line on the outside of the casing. Watertight connections are assured by a system of rubber seals compressed by clamps or by the weight of the equipment itself. The top of the casing, which provides access to the well, must be sealed and vented as discussed above.

Drop Pipe – Riser
The drop pipe or riser is the pipeline leading from the pump up to the wellhead. It assures adequate support so that an above ground pump does not move and so that a submersible pump is not lost down the well. The drop pipe is the pipe through which water is transported from the pump up to the water system distribution piping.

Foot Valve
A foot valve is a type of check valve. The foot valve is installed at the bottom, or foot, of the drop pipe. Water flow forces the valve open when the pump starts, and closes when the pump stops. For instance, when the pressure in a hydropneumatic tank drops to 30 psi, the pump starts. When the pump starts, the foot valve opens and water flows to the pressure tank until the shutoff pressure of 60 psi is attained. At 60 psi,

the pump shuts down, and the foot valve then closes. This prevents the water from flowing back down into the well and keeps the drop pipe and water distribution lines full.

Because of freezing concerns, some wells have a weep hole in the riser so the riser pipe does not have standing water in it. Small particles of sand or foreign material may cause the foot valve not to seat tightly. A properly functioning foot valve is particularly important for wells with a lineshaft turbine pump because if the foot valve leaks, the water will drain down out of the riser pipe and the pump will lose its **prime**.

Well Screen (or filter pack)
Screens, or slotted casings, are installed at the intake point(s) on the bottom end of a well casing or on the end of the inner casing on a gravel pack well. These screens perform two functions:

1. Supporting the borehole
2. Reducing the amount of sand that enters the casing and the pump

In an artificially gravel-packed well, the aquifer formation material around the well screen is removed. The removed materials are replaced by more coarse material of high uniformity, approximately five times the diameter of the native material, such as pea gravel. It is designed to:

- increase the permeability of the formation and screen.
- exclude virtually all of the formation material beyond the gravel pack.
- stabilize the formation.

The filter pack material is poured down the annular space between the drill hole and casing prior to the installation of the grout.

The size of the slots for the screen or perforated pipe is based on a sieve analysis of samples of the aquifer material. The screen manufacturer usually makes the sieve analysis. If the slot size is too large, the well may yield sand when pumped. If the slots are too small, they may become plugged with fine material and the well yield will be reduced. In a drilled well the screens are usually placed after the casing has been installed. In a driven well, the screen is a part of the drive assembly and is sunk to its final position as the well is driven.

Packers
Telescoped screen assemblies are equipped with one or more sand-tight seals between the top of the telescoped screen assembly and casing. Packers are made of material that will not impart taste, odor, toxic substances or bacterial contamination to the well water.

Lightning (Ground) Protection
Voltage and current surges produced in power lines by lightning discharges are a serious threat to electric motors. High voltage can easily penetrate and burn the insulation between motor windings and motor frame. A submersible pump motor is highly vulnerable to voltage and current surges because it is submerged in water. Groundwater serves as the natural ground sought by an electrical discharge. There are simple lightning arresters available to protect motors from near miss lightning strikes although arresters are seldom effective against direct hits.

Small water system operators unfamiliar with the basics of electricity and lacking hands-on experience should contact a local electrical firm or pump service company to install lightning protection or perform electrical maintenance and/or repairs.

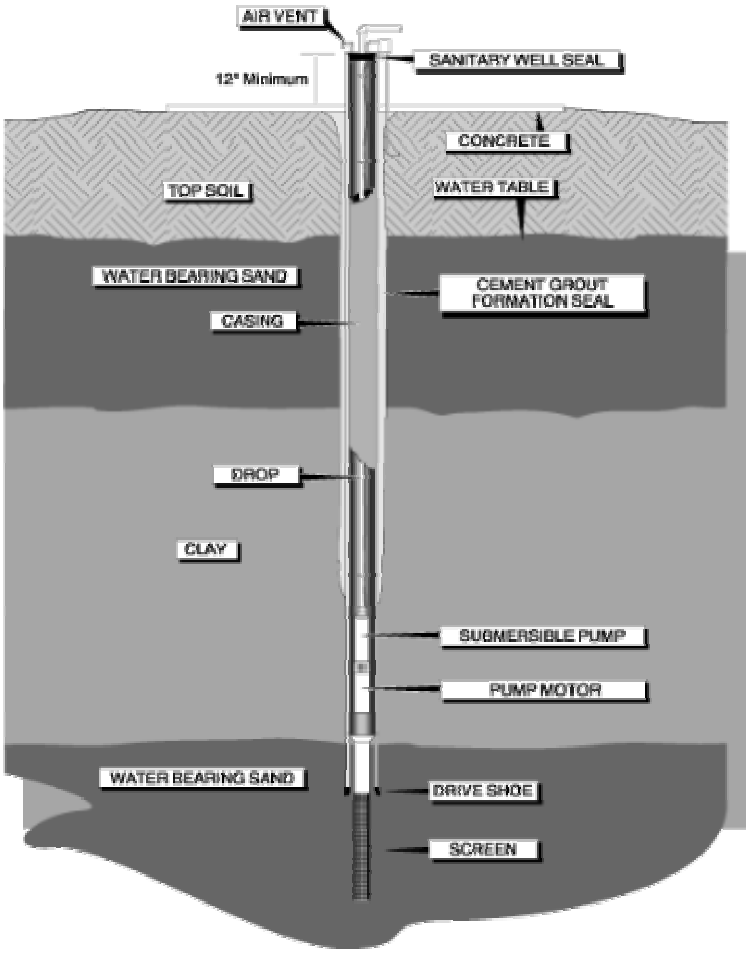

Figure 3.4: Well Components

3.11 Well Pumps

Three common centrifugal pumps installed in groundwater systems are submersible turbines, lineshaft turbines, and jet-equipped centrifugal pumps.

A **submersible pump** (Figure 3.5) is a vertical turbine pump with the motor **close-coupled** to it and placed in a watertight enclosure. The pump and motor are submersed in the well and are connected to the surface by the drop pipe and electrical connections. It is a pump that is usually designed to be multi-staged (the pump has more than one **impeller**). How far the water must be lifted and how much pressure is needed in the distribution system determines the number of stages.

Since the pump is submerged, it requires no suction line and the motor is located on the bottom of the pump. The motor is sealed and designed to operate under water. No external lubrication is required. The motor is completely enclosed and may be oil-filled, however, most new models are water-filled. The entire unit is lowered into the well on the end of the drop pipe.

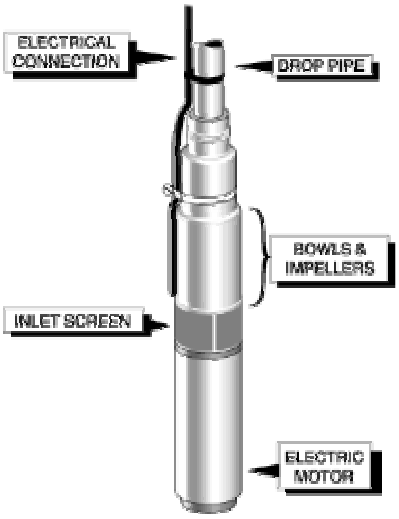

Figure 3.5: Submersible Pump

Submersible pumps are extremely reliable and maintenance is minimal since there is no line shaft or oil tube requiring operator attention. However, if either the pump or motor needs to be repaired or replaced, the entire pump must be removed from the well. Removal of a submersible pump requires specialized equipment, such as a truck with a boom and winch to raise the drop pipe and pump.

The **lineshaft turbine** pump (Figure 3.6) is also a vertical turbine pump with multiple submerged bowls and impellers.

The motor is mounted above ground, usually on a cement pedestal, with a vertical shaft that connects the motor to the pump at the bottom of the well column. A turbine pump will usually be staged with more than one bowl and impeller to produce the required pressure. The water from one stage will be discharged into the suction eye of the next stage, gaining pressure with each successive stage. The size or diameter of the first (lowest) impeller dictates the volume capacity of the pump in gallons per minute (gpm).

Vertical turbine pumps contain the following parts: power source, discharge head, pump column, pump shaft, shaft bearings, and the pump assembly (bowls and impellers) itself.

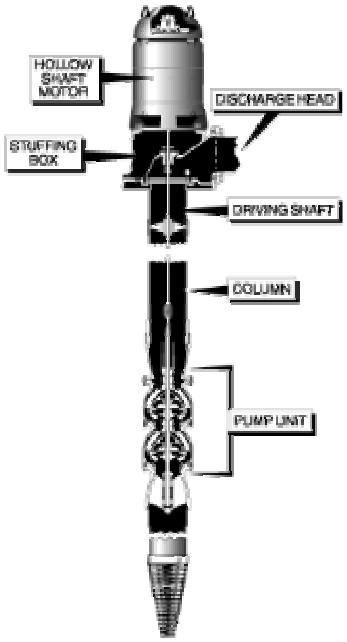

Figure 3.6: Lineshaft Turbine

A jet pump (Figure 3.7) is a combination of a centrifugal pump and a venturi tube. The jet pump includes a centrifugal pump above ground, a drive pipe from the centrifugal pump down to the jet nozzle, a jet nozzle, a venturi tube, and the suction pipe for the centrifugal pump (also the discharge for the jet nozzle).

The jet nozzle receives water at high pressure from the centrifugal pump, and as it passes through the venturi jet, the water speed (velocity) increases and pressure drops in the nozzle. The velocity of the water coupled with the pressure drop allows water to be sucked into the inlet of the unit. A portion of the water is always re-circulated back down to the nozzle, which makes jet pumps inherently inefficient.

Jet pumps are seldom used in Alaska public water systems because of their low efficiency. They are commonly used for private wells because of their initial low cost and low maintenance. Jet pumps are used successfully in shallow wells and small diameter domestic wells.

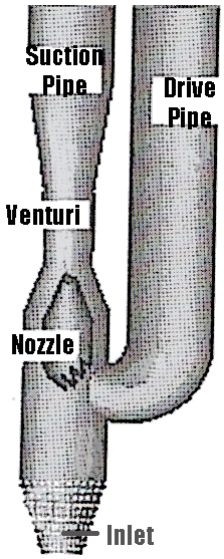

Figure 3.7: Jet Pump

3.12 Well System Components

Specialized equipment is required to meet the State of Alaska construction standards for drilling a well and installing the well casing, screen, and various components that make up a well system.

An understanding of the components that make up your well system will assist you with maintenance and troubleshooting. Not every well component an owner/operator may encounter is covered in this section.

Check Valve
The check valve acts as an automatic shutoff when the pump stops. Water is prevented from draining back down the drop pipe providing the same reverse flow functions as the foot valve. The check valve is usually above ground located on the discharge side of the pump.

Sample Tap
A spigot, referred to as the raw water sample tap, is located in the well house, on the pump discharge line prior to any storage or treatment is and is used to sample water coming directly from the well.

Flow Meter
A flow meter records the total amount of water produced by the well in gallons or cubic feet. Well discharge data can be used to track pump efficiency. It can also be used to establish fair rates for customers. Also any unexplained increase of water usage may be the first indication of a water leak.

Blow-Off Valve
A blow off valve is normally located in the well house prior to the main control valve (isolation valve). The blow off valve is used to flush the well of sediment or chlorine after emergency disinfection.

Isolation Valve
In order to work on the pump, it must be isolated from the rest of the system. A gate valve or butterfly valve installed on the discharge line can serve as an isolation valve.

Pressure Gauge
The pressure gauge on a pump should be installed in the well house on the discharge piping, but as far from the pump as practical. If mounted on the pump casing directly, it will not give accurate readings.

A properly operating discharge pressure gauge is a handy tool to diagnose pump problems. If readings begin to show a steady increase in pressure, there may be an obstruction building downstream from the gauge. If gauge readings show a steady decrease in pressure, check for a leak or break in the piping downstream. If your system is not equipped with a flow meter, the flow rate can be estimated using the readings from the pressure gauge, although a flow meter is recommended.

3.13 Groundwater Withdrawal

As the well is pumped, groundwater flows through the aquifer toward the well and is removed from the aquifer surrounding the well. The level of the water table in the vicinity of the well will be lowered. This lowering, or draw down, causes the water table or artesian pressure surface, depending on the type of aquifer, to take the shape of an inverted cone called a **cone of depression** (Figure 3.8).

The cone of depression, roughly conical in shape with the well at the center axis, is produced by the extraction of water from a well. As a pump turns on and off, the depth of water will move up and down. If the pump were shut off for several hours and the water level allowed to recover and stabilize, the level would be called the **static water level**.

At increasing distances from the well, the draw down of water decreases until the slope of the cone merges with the static water table. The distance from the well at which this occurs is called the **zone of influence**.

The zone of influence is not constant but tends to expand with continued pumping. At a given pumping rate, the shape of the cone of depression depends on the characteristics of the water-bearing formation. Shallow and wide cones will form in highly permeable aquifers composed of coarse sands or gravel. Steeper and narrower cones will form in less permeable aquifers. As the pumping rate increases, the draw down increases and consequently the slope of the cone steepens.

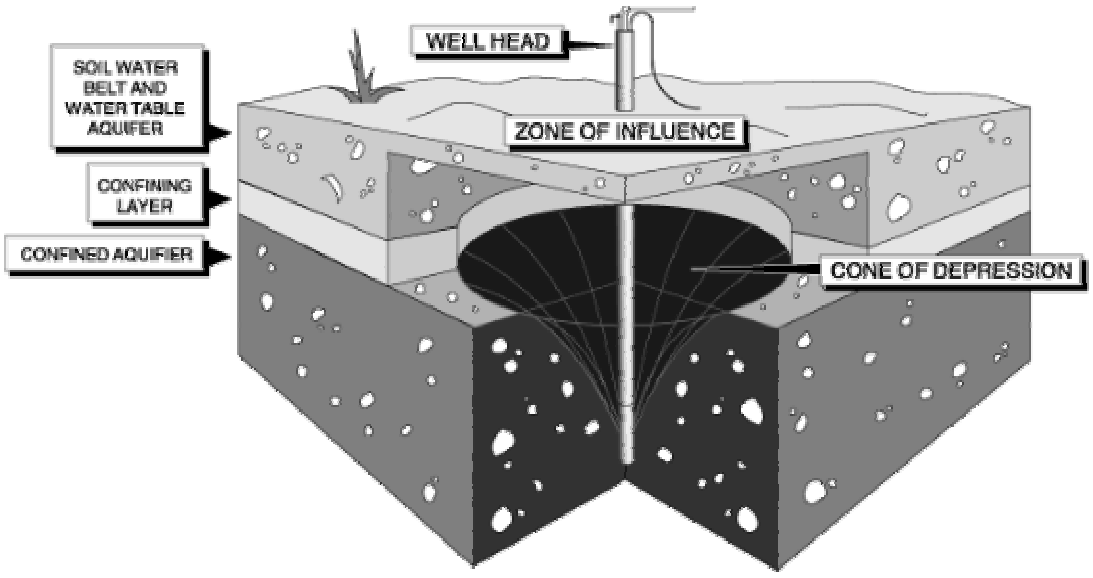

Figure 3.8: Cone of Depression

3.14 Well Log

A **well log** is a written report produced by the well driller during the drilling and includes:

- A description of the material (soil, rock, or ice) that was encountered during drilling
- The depths at which they occurred
- The depth to groundwater
- The total well depth
- The length, diameter, wall thickness, and type of casing
- Location and type of casing perforations or screen
- Location and type of grouting

The well log report should also include the yield and results of the draw down test and the names of the water system owner and the well driller. This original information will be collected when the driller performs a pump test. Pumping tests, when properly performed, provide information about the performance and efficiency of the well and the pump.

Measurements of static water level, pumping water level, **well yield**, and discharge pressure are recorded on the original well log report. At a minimum, the system operator should repeat these measurements quarterly. From these measurements the operator can determine draw down, specific capacity, and pump performance. These results may then be compared with the original well log and previous results to estimate changes in well and/or aquifer conditions and pump performance.

You should receive a copy of your well log report from the well driller within 30 days. Alaska state law requires that you send a copy of the well log to DNR within 45 days. The well driller is required to file a copy with ADEC within 30 days after completion of the well. Appendix 2 is an example of a Well Log Report.

3.15 Well Production Testing

If you use groundwater as your source, the following well production testing terms are important:

- **Static water level** – This is the level where water stands when the well is not being pumped. It is generally expressed as the distance in feet from the top of the well casing down to the water level in the well.
- **Pumping water level** - The level at which water stands when the well is being pumped. Pumping level is measured the same as static water level.
- **Draw down** - The difference in feet between the static and pumping water levels in a well.
- **Well capacity (Yield)** - The volume of water per unit of time discharged from the well usually recorded as gallons per minute (gpm) or gallons per day (gpd).
- **Specific capacity** - The well yield per unit of draw down. Commonly expressed as gpm/ft.
- **Well development** - Involves vigorously pumping the well to help clean out drill cuttings and to maximize production of the well. Development should result in a well that produces sand-free water when operated properly.
- **Top terminal height** - The casing head must extend twelve inches minimum above the finished ground surface or pump house floor, and twelve inches above the local surface runoff level.

Well depth can be measured by using a weighted line or by measuring the drill pipe in the hole when drilling is completed. Tie a heavy weight to a string and lower it into the well until it touches bottom and measure the length of the string used. The depth should be close to the depth recorded on the well log report.

A variety of methods are used to determine the static water level in a well, but all wells should have an access port or some feature that allows water level measurements to be easily taken.

Two common methods used to measure static water level are the electric tape method and the air line method. The electric tape method consists of a battery connected to a pair of insulated wires molded into a measuring tape. When the wires touch the water, the circuit is completed and a sensor (meter, light, or buzzer) indicates that the water surface has been reached and the depth can be read from the tape.

The air line method measures the water level depth by determining the air pressure required to push all the water out of a submerged tube of a known length. There is a direct correlation between pressure (pounds per square inch) and feet of water (0.433 psi = 1 foot of water).

Pumping level is measured the same as static water level.
To determine draw down, first determine the static water level. Then, after the well has been pumping at a constant rate for several minutes, or until you are confident that the pumping water level has stabilized, measure the depth to water again. The difference between

these two readings is recorded as feet of draw down.

Specific capacity is calculated by dividing the well yield in gallons per minute (gpm) by the draw down. This data should be plotted on a chart so you can visually track the performance of the well. Industry standards suggest that a ten percent reduction in specific capacity signals that it is time to consider pump maintenance and/or well rehabilitation.

The frequency of well testing depends entirely upon the performance of your well. For example, a well that produces plenty of water, recovers quickly, has good water quality, and has a consistent draw down level may only need to be tested occasionally. Other wells may need to be monitored constantly. Initially, you may want to test your wells weekly, monthly, or bimonthly to become comfortable with the procedures.

Chapter 4 – Water Treatment

4.1 Introduction

The primary purpose of water treatment is to produce water that is safe to drink. Unfortunately, unless the water is also pleasant to drink, it may be rejected by the consumer in favor of an alternate supply that may not be safe.

Consequently, water delivered to the consumer from a public water supply should meet certain basic requirements, such as:

- It should contain no disease-causing organisms
- It should contain no toxic metals or chemicals
- It should be colorless and clear
- It must taste good and be free from offensive odor
- It should be non-corrosive
- It must be free from objectionable gases, such as hydrogen sulfide
- It should be free from objectionable staining minerals, such as iron and manganese
- It should be plentiful and low in cost

Alaska is fortunate to have some very high quality water sources. Some groundwater sources, for example, are of such high quality that they can be piped directly from the well to the consumer with no treatment whatsoever. However, with a few exceptions, it is difficult to find a source of water that will meet all of the basic requirements for a public water supply without some type of chemical addition or treatment.

For most small systems, water treatment is relatively simple. Various low-flow technologies are available that enable small systems to remove or inactivate undesirable contaminants and make the water safe for consumers at a reasonable cost.

Occasionally, source waters are of such poor quality that a small system must resort to more complicated treatment methods, such as those used by large municipal systems. This manual discusses only the chemicals and "passive treatment" methods utilized by Alaska's small-treated systems.

Passive treatment includes water treatment processes that require only minimal operator interaction, such as cartridge or bag filtration, ion-exchange softening or ion-exchange iron removal, ultraviolet disinfection, sand filtration with no chemical addition (commonly referred to as straining) and pH adjustment using passive limestone contactors.

The type of treatment selected depends upon the contaminants that need to be inactivated or removed from the water. Contaminants, and other objectionable characteristics of water, which are of concern include the following categories:

- Turbidity and Particulate Matter
- Microorganisms
- Iron and Manganese
- Color, Taste and Odor, and Other Organics

- Objectionable Gases
- Hardness
- Nitrate
- Corrosive Properties
- Radon
- Biological Nuisances (Algae, Iron Bacteria, etc.)

Refer to Appendix 3 for a list of potential chemical contaminants and their health effects.

The following discussion will address each of these categories individually. Treatment methods and strategies, both passive and those involving chemical addition, that are typically used by small-treated systems to deal with each category will be presented. Some methods may be applied to more than one category.

There are many books and manuals that discuss the water treatment methods that are common to larger systems. Operators interested in more detailed information should refer to these resources. Please contact ATTAC or the Operations Assistance Unit at ADEC to obtain additional reference materials on water treatment.

4.2 Water Quality Problems and Solutions

Problem	Typical Corrective Procedures
Fine sand, clay, other particles	Remove using a mechanical filter
Bacterial contamination	Remove the source of contamination or treat using chlorination or other forms of disinfection
Hydrogen sulfide gas (rotten egg odor)	Remove using chlorination and a sedimentation filter or an oxidizing filter followed by activated carbon filter
Many odor and taste problems other than rotten egg odor	Remove using activated carbon filter
Suspended iron and manganese particles	Remove using a mechanical filter
Small amounts of dissolved iron	Remove using a water softener
Higher amounts of dissolved iron and manganese	Remove using a potassium permanganate regenerated oxidizing filter
Very high amounts of dissolved iron	Remove using a chlorinator followed by a mechanical filter
Hardness	Treat using a water softener
Acidity	Treat using a neutralizing filter
Volatile organic chemicals, trihalomethanes, certain pesticides and radon	Remove using an activated carbon filter
High total dissolved solids, sodium, sulfates, nitrates	Remove using reverse osmosis unit or a distiller
Heavy metals (lead, mercury, arsenic, cadmium)	Remove using reverse osmosis unit or a distiller

Table C: Water Quality Problems and Solutions

4.3 Removal of Turbidity and Particulate Matter

Turbidity is a condition in water caused by the presence of suspended matter. Very fine silt and clay are primarily responsible for the turbidity. However, any suspended material, including non-dissolved organics (bits of vegetation for example) and precipitated inorganics, that will not readily settle contributes to turbidity. Some particles are so small they will not settle at all. These tiny suspended particles are known as **colloids** or colloidal particles. Colloids are generally too small to be removed by passive filtration and generally require complex treatment processes for removal.

In surface water sources larger particles, such as leaves and twigs must be removed to protect pumps and other equipment. In groundwater, sand may also be a problem.

4.3a Cartridge and Bag Filters

A cartridge filter (Figure 4.1) is made up of a housing (sump and cover) and a removable cartridge (element). The cartridge itself is a disposable item. These devices are suitable for filtering water with small amounts of suspended material or if a small volume of water is required.

In a cartridge filtration system the replaceable inner element, which is similar to an automobile oil or air filter, consists of a membrane folded in accordion fashion with a molded retaining device. The package is sealed into a pressure vessel. As the membrane becomes soiled, raw water will pass further down the pleat until the whole surface is soiled.

An extra filter cartridge or canister is often included with the initial purchase. They also may be available from the same dealer, at a plumbing supply store, or by mail order. Always keep spare filter cartridges on hand.

When you start to experience low water pressure, the filter is probably full (becoming plugged) and needs replacement. Replace the filter cartridge and remember to put a quarter teaspoon of household bleach into the filter sump to kill any bacteria introduced during filter replacement.

Remember to handle the replacement filter **aseptically** (wash your hands and use clean latex gloves). Do not put the system back on line for ten minutes. This gives the bleach sufficient contact time to disinfect the unit and kill potentially harmful pathogens. Flush the system to waste if this option is available. If the filter cartridge has a by-pass valve in the assembly, remember to put it back into the service position after disinfection.

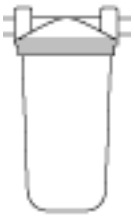

Figure 4.1: Cartridge Filter

Bag filters (Figure 4.2) can be used to filter larger microorganisms such as *Giardia* and certain other types of protozoa. With the bag filter, one or more layers of fabric are formed into a seamless bag that can be sealed into a pressure vessel. The membrane for this type of filtration may be woven or non-woven, and fibers may be either natural or synthetic.

One type of bag filter made by the 3M Company has many layers of fine fabric interwoven with a more porous fabric. As in sand filtration, particle removal occurs deep in the fabric, leading to longer filter runs and less pressure loss through the filter than with cartridge filters. Where small cartridge filters are available with either stainless steel or plastic housings, the bag filters are typically installed using stainless steel housings.

In both the bag and cartridge filter designs, excessive pressure loss indicates that the cartridge must be replaced. Unlike traditional filtration technologies, backwashing is usually not used to clean the bag or the cartridge filter. Instead, the whole bag or cartridge is replaced with a new one. The old bag is disposed of along with the accumulated dirt and debris.

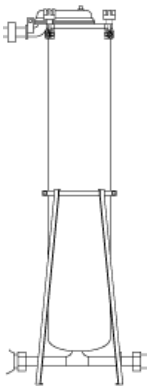

Figure 4.2: Bag Filter

Some cartridge filters can be cleaned by backwashing, but will still need periodic replacement. Because operators spend less time cleaning equipment, a saving in labor costs offsets the expense of replacing the filter element. Another benefit is not having to dispose of wash water with a high sediment load. Without having to dispose of this waste, costs are cut even further.

The following sequence can be used as a guide for changing the elements in both cartridge or bag filters:

- Shut off the inlet and outlet isolation valves
- Drain the pressure from the system - this can be accomplished by opening the filter to waste valve
- Put on latex gloves
- Remove the housing cover
- Remove the filter element - place the filter element in a sealed bag for disposal
- Using a chlorine solution of one to five percent (household bleach is approximately 5% chlorine) disinfect the interior of the housing
- Install the filter element
- Inspect the seal on the housing and replace if damaged
- Replace and tighten the housing or housing bolts - do not over tighten the housing
- If not already open, open the filter to waste valve
- Slowly return flow to ½ of normal
- After five to ten minutes, close the filter to waste valve and open the inlet and outlet valves
- Record initial pressure gauge reading across each stage and flow through the filters
- Record the date you change the filter

Some small systems use a combination cartridge/bag filter design to increase the effectiveness of *Giardia* removal. There is no set standard cartridge/bag filter design but the design must include an approved *Giardia* barrier filter. Contact your local ADEC office for names of approved filters providing *Giardia* protection.

Typically, installations include a *Giardia* filter preceded by one or more pre-filters and/or basket strainers. The pre-filters extend the life of the *Giardia* filter by removing excessive debris and they are less expensive to replace than a *Giardia* filter. Typical combinations of filter and pre-filters (Figure 4.3) are:

- 50 and 25 micron pre-filters followed by a 5 micron *Giardia* filter
- 50 and 5 micron pre-filters followed by a 2.5 or 1 micron *Giardia* filter
- 25 and 5 micron pre-filters followed by a 2.5 or 1 micron *Giardia* filter
- Back washable basket strainers or mixed media filters with 50, 25, or 10 micron effective size and 95% removal efficiency, followed by a 5, 1.5 or 1 micron *Giardia* filter

Be aware that modifications must be approved by ADEC. Some typical modifications that should be approved are changing the filter micron size, eliminating or bypassing a component on the system, and replacing or adding new components to the system.

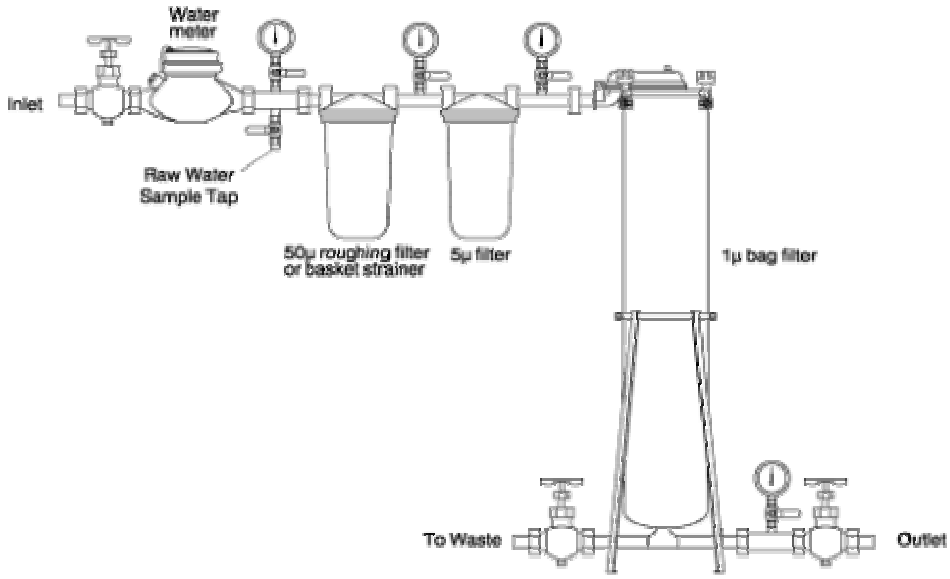

Figure 4.3: Cartridge Bag Filtration

4.3b Sand Filters

Direct sand filtration, filtration without the addition of chemicals will remove a good portion of the larger suspended particles responsible for turbidity. This passive, direct sand filtration is simply a fine, straining process. Very tiny turbidity-causing particles (including colloids) usually will not be adequately removed by direct sand filtration.

In small systems, these types of sand filters are usually installed inline as "pressure filters." This means that the filtering sand is installed inside a sealed tank that is under the same pressure as the distribution system; not open to atmosphere like a typical gravity filter. The tanks are usually cylindrical and may be oriented either horizontally or vertically. Water usually flows from top to bottom. In either case, they have the same internal components (Figure 4.4). Inlet piping completes the system.

The exit pipe at the bottom is valved to allow backwash and filter-to-waste flow. Graded gravel provides a support for garnet sand, which in turn supports graded silica sand. Anthracite coal, used to adsorb dissolved organic material, is often layered on top of the silica sand (refer to Section 4.6a).

Sand filters must be cleaned periodically using the classic backwash process. The backwash sequence and timing is often automated. The process requires a supply of water and results in a silt-laden backwash waste that must be properly disposed of. These requirements mean that direct sand filters have the disadvantages of requiring frequent operator attention and expensive backwash equipment.

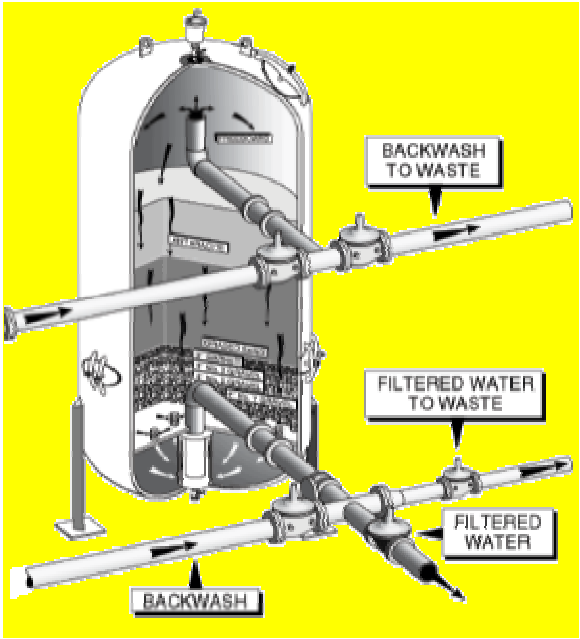

Figure 4.4: Pressure Filter System

Another operational handicap is the fact that the operator cannot directly observe the operation of the filter. Access to the inside of the vessel is through a sealed hatch.

4.3c Sand Traps

Most wells produce some sand. If sand is excessive, a sand trap can be installed to prevent sand from entering the piping system. Normally, sand traps consist of a large tank with a series of internal baffles or chambers. The baffles or chambers slow the velocity of the water so that gravity will cause the sand and heavier silt particles to settle to the bottom of the tank. Sand and silt are removed from the tank by a blow-off valve located on the bottom of the tank.

4.3d Screens

Screens occasionally are used to remove large chunks of material from surface water sources. Screens protect the pumps, the piping system and other inline equipment from excessive wear and from plugging. Screens remove such things as leaves, twigs and branches, fish, animals, plastics, fabric and anything else that may be carried in or on the raw water source. They are placed on the raw water inlet end of piping systems that are used to withdraw water from lakes, reservoirs, rivers and streams. Screens are also recommended for roof catchment systems. They must be inspected periodically and material trapped on the screen removed so that inlet flow is not reduced to an unacceptable level.

In groundwater systems, all submersible well pumps and drop pipes for above ground well pumps have screens to prevent rocks and sand from entering the pump. Even with screens, not all sand can be eliminated from some groundwater sources.

4.4 Removal of Microorganisms

As discussed in detail in Sections 2.6 and 2.7, a variety of microorganisms are responsible for a number of waterborne diseases. These pathogenic microorganisms include bacteria, protozoa and viruses.

The waterborne diseases they cause include typhoid fever, cholera, dysentery, hepatitis, and giardiasis among others. Obviously, pathogenic microorganisms must be removed or inactivated before water is safe to drink.

One of the very best ways to eliminate pathogenic microorganisms from drinking water is to choose a high quality raw water source and do everything you can to protect that source from contamination. Unfortunately, that is not always possible, particularly with surface water sources.

Disinfection is the most common method of inactivating pathogenic microorganisms. Disinfection is of such critical importance to water treatment that a separate chapter in this manual is dedicated to the process (refer to Chapter 5).

4.5 Removal of Iron and Manganese

Iron and manganese in drinking water can both be a major nuisance. They will stain laundry, bathroom fixtures, and give an objectionable taste to foods and beverages. Iron leaves a classic “rusty” red stain, where manganese leaves a darker, greenish-black stain. Iron and manganese are common water

contaminants found in Alaska's groundwater but they are not considered health hazards.

Common treatment methods for small-treated systems include removal by ion exchange and stabilization with sequestering agents. Systems that add oxidizing chemicals to precipitate the iron and manganese, which is then filtered out of the water, are classified by ADEC as levels 1 - 4, not as small-treated systems.

4.5a Ion Exchange

Iron and manganese removal by ion exchange involves passing the water through a column containing a special granular, bead-like ion exchange material. Several different types of ion exchange materials are in use, including natural substances called **zeolites** and synthetic resins. Figure 4.5 illustrates an ion exchange system.

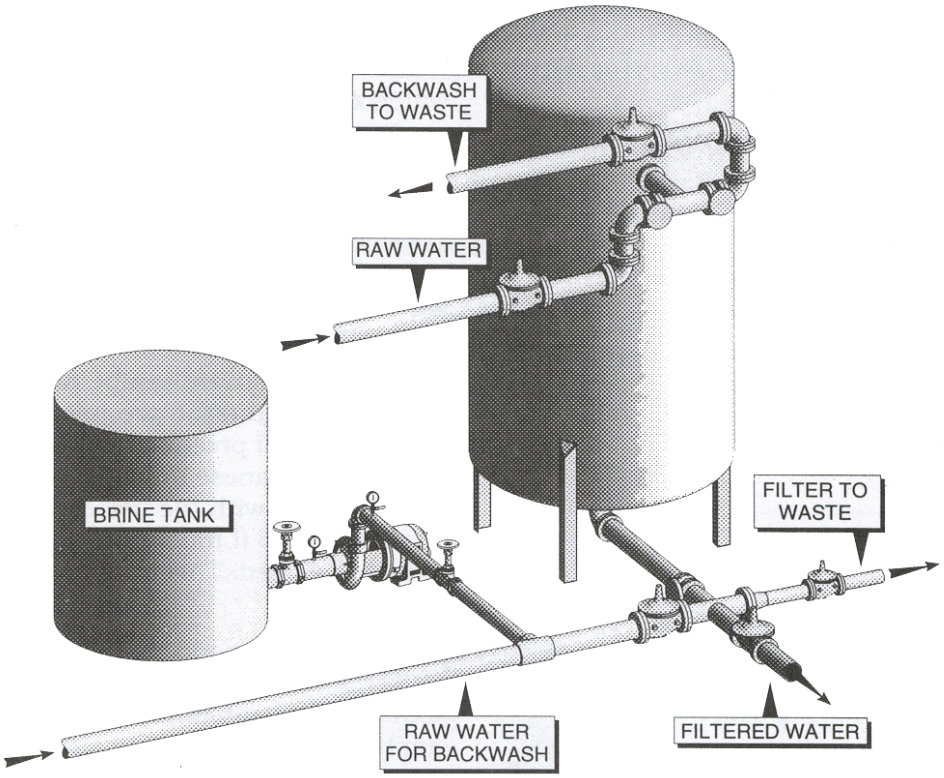

Figure 4.5: Ion Exchange System

The exchange resin is placed in a pressure vessel, and salt brine is flushed through the resin. The sodium ions in the salt brine attach to the resin particles, which are then said to be "charged." Once "charged," the raw water, which contains iron and manganese, is passed through the resin

and the iron and manganese replace the sodium ions; that is the iron and manganese ions are exchanged for the sodium ions. The resulting treated water has no iron and manganese but does contain sodium ions.

The exchange column will continue to remove iron and manganese until all the sodium on the exchange resin has been replaced. At this point it is necessary to regenerate the exchange resin. This is accomplished by passing a strong salt brine through the exchange medium. The extremely concentrated salt brine is capable of reversing the exchange process and replacing the iron and manganese with sodium ions. The waste generated during the recharge process is diverted and disposed of. Then the exchange column is ready to be put back into service.

The ion exchange process is only applicable for waters in which the iron and manganese are in a soluble form and their concentration is less than 0.5 mg/L. Also, this method should only be considered for waters free of dissolved oxygen. If oxygen is present the iron and manganese will be oxidized and come out of solution as a precipitate.

The ion exchange process will not work with precipitated materials. In fact, precipitates will plug up an ion exchange column. Water should not be pH corrected prior to ion exchange, because lowering the pH can bring about precipitation of the iron and manganese. The method is used for low flow applications where manganese is the primary metal ion to be removed because the resin exchanges the manganese ion more readily than the iron ion.

4.5b Sequestering

Soluble iron and manganese can be stabilized, or **sequestered**, instead of removed. Sequestering keeps the iron and manganese in solution. This effectively eliminates the problem of staining because it is the insoluble precipitate that causes the staining. The process also delays the precipitation of **oxidized** iron, thereby greatly reducing the layer of scale that forms on the pipe. Red water can sometimes be prevented in this way.

Phosphate compounds are a family of chemicals that can surround minerals and keep them in solution. Pyrophosphate, tripolyphosphate, and metaphosphate may all be effective as iron and manganese sequestering agents. The most effective one, however, seems to be sodium phosphate in low concentrations. The proper dose and type of phosphate should be selected only after a qualified technician or consultant performs bench-scale testing.

Phosphate sequestering is effective where the water contains up to 0.3 mg/L of iron and less than 0.1 mg/L of manganese. The phosphate compounds must be added to the water at a point where the iron is still dissolved in order to maintain water clarity and prevent possible iron staining. This should be before your **hydropneumatic** tank and as close to the well discharge point as possible.

Phosphate compound treatment is a relatively cheap way to treat water for low levels of iron and manganese. Since phosphate compounds do not actually remove iron, water treated with these chemicals will retain a metallic taste. In addition, too great a concentration of phosphate compounds will make water feel slippery.

4.6 Removal of Color, Taste and Odor, and Other Organics

Taste and odors can be caused by a variety of substances in water, one of which is organic compounds. Sources of taste and odor problems include microorganisms, such as algae and actinomycetes bacteria, decaying vegetation and gases, such as hydrogen sulfide. Tastes can also be traced to high levels of dissolved minerals in water. In addition, corrosion of galvanized piping can result in the release of zinc, which imparts a metallic taste to water. And improper application of chlorine for disinfection can result in chlorine taste and odor.
Organics are also the most frequent cause of color problems in drinking water. In addition to taste, odor and color causing organics, there are occasionally other types of undesirable organic compounds present. Some of these can be detrimental to the health of consumers. Consequently, it is impossible to suggest a single treatment that would be universally effective in controlling all taste, odor and color problems.

This section will discuss the use of aeration, oxidizers, and carbon adsorption for destruction and removal of organic compounds. We will also discuss, in a general way, options for controlling other causes of taste and odor. A number of taste and odor control methods including oxidation followed by filtration, are more complex and systems using these complex treatment methods are classified by ADEC as levels 1 - 4, not as small-treated systems.

4.6a Carbon Absorption

Activated carbon (AC) is used to remove soluble organic compounds. Particles of activated carbon have a highly porous structure created by the “activating” process. The result is a material that has as extremely large surface area. It has been estimated that a gram of activated carbon has a surface area equal to the area of a football field. This extremely large surface area is what gives activated carbon its adsorptive capacity properties.

Organic compounds, including those causing taste and odor are adsorbed to the convoluted surface of activated carbon. It is also effective for the removal of color and organic compounds, which may be present in a water system as a result of chlorination or industrial pollution.

AC can be used in two types of filter systems; cartridge and in a filter vessel.

Cartridge AC filters are similar to regular cartridge filters, except the filter cartridge is coated with a layer of activated carbon or has an activated carbon core. AC cartridge filters are commonly used in combination with normal cartridge or bag filters.

AC, in the form of anthracite coal, can be used like packed filter media in a pressure filter vessel. The anthracite coal can also be used as the top layer of material in a sand filter vessel. Because AC has a low density it will stay on top when the sand filter is backwashed. Turbidity causing particles will also be absorbed, but activated carbon should not be used if turbidity is the only problem.

A sediment filter installed ahead of any AC filter will prolong the life of the AC unit. Sediment can easily clog the pores of an AC filter within a short period of time. A good sediment filter can be purchased for only a fraction of the price of most high volume AC filters.

Eventually, an AC filter loses its ability to remove contaminants, because it becomes clogged with material. In the case of taste and odor, the time to change the filter is easy to detect. However, in the case of other contaminants, it is more difficult to determine when the filter is no longer performing at an adequate level. Most manufacturers recommend a filter change after a certain volume of water has passed through the filter. Some AC units actually meter the water and automatically shut down after a specific quantity of water has passed through the filter. The only certain way of knowing contaminant levels in the treated water is by testing the water.

4.6b Aeration

Aeration processes can be used to remove many of the substances responsible for taste and odor problems, as well as many other organic compounds.

The processes mix air with water to remove the organic impurities. **Volatile** organic compounds, those that escape from the water into the air, and dissolved gases can be removed by the sweeping or scrubbing action that results from the turbulence of the water and air mixing together. Oxidation of certain dissolved gases and minerals such as iron or manganese also occurs.

Aeration using the scrubbing action is also referred to as air stripping. Mixing the air and water volatilizes contaminants (turns them to vapor), which are released directly to the atmosphere. Some small systems use a simple aerator (Figure 4.6) constructed from relatively common materials instead of a designed aerator system.

Aerators include:

- a system that cascades the water or passes it through a slotted container,
- a system that runs water over a corrugated surface, or

- an airlift pump that introduces oxygen as water is drawn from the well.

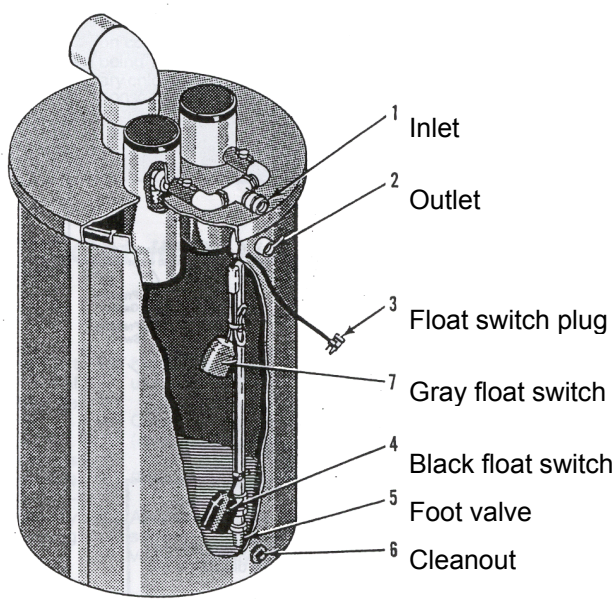

Figure 4.6: Aerator System

Aeration also chemically oxidizes some organic compounds changing the characteristics of the compound to such an extent that they are no longer offensive or dangerous. Air is a weak oxidizer, however, and not all organic compounds can be destroyed in this way.

4.6c Use of Chlorine and Ozone

As just mentioned above in the section on aeration, the chemical characteristics of organic compounds can be changed by a chemical reaction called oxidation. When the chemical characteristics are modified they often lose their offensive taste and odor.

Chlorine and ozone are both strong oxidizing agents, much stronger than aeration. Of course, chlorine and ozone are both used for disinfection. So if the application of these disinfectants is designed properly, it is possible to have the added benefit of color and taste and odor control.

Chlorine and ozone may also have unintended impacts that actually create more problems, such as creating chlorine by-products (refer to Chapter 5), chlorine taste and odor, and precipitation of minerals. For that reason, you should consult a water treatment expert, ATTAC, or ADEC to help design a taste and odor control strategy involving these strong oxidizers.

4.6d Other Taste and Odor Control Strategies

Other significant sources of taste and odor include dissolved minerals, chlorine compounds, and algae growth in raw water supplies.

Reducing the problems associated with dissolved minerals could mean removing them with ion exchange (as with iron and manganese) and reducing the corrosivity of your water (corrosion of galvanized pipe can release metallic tasting zinc).

Chlorine taste and odor problems can be minimized by careful disinfection practices. Appropriate design of the chlorine application point and attention to breakpoint chlorination practices are critical factors.

Surface water supplies occasionally support algae growth, especially during the warmer summer months. Algae releases waste and decay products that can cause significant taste and odor problems. Control of algae growth in the reservoir before water is taken into the system (copper sulfate application, for example) will minimize problems later on.

Occasionally, taste and odor problems may be serious and complex enough to warrant seeking a new water source. Remember that poor tasting water often drives consumers to alternate drinking water supplies that may taste better but may not be safe.

4.7 Objectionable Gases

Hydrogen sulfide gas, which causes the classic rotten egg odor, and methane are two objectionable gases occasionally found in water supplies. Sulfur odors may be present in some groundwaters. Although not objectionable themselves, the balance of dissolved oxygen and carbon dioxide affects the pH of the water, which can affect other processes.

The most effective treatment process that small systems can use for removal of undesirable gases is aeration (4.6b).

4.8 Control of Hardness (Softening)

As discussed earlier, water with high hardness decreases the effectiveness of soaps and detergents and increases scaling in boilers and hot water heaters. For that reason hardness may need to be reduced to an acceptable level. The removal of hardness is called **softening**.

Hardness is caused by calcium and magnesium. Softening involves the removal of calcium- and magnesium-containing compounds. Two softening processes are used in water treatment: the lime-soda ash process and ion exchange. Because of the complexity of facilities and equipment required, the

lime-soda ash process is not used in small systems.

Softening by ion exchange is very similar to iron and manganese removal by ion exchange (refer to Section 4.5a). The difference lies in the type of exchange resin that is used. In this case the calcium and magnesium ions are taken up by the resin, and sodium ions are released into the water.

Softening by ion exchange can produce water with almost zero levels of hardness, but that is not really desirable. Very soft water may be aggressive, or corrosive, causing damage to metal pipes and plumbing. Hardness levels of about 100 mg/L are considered optimum for drinking water. Consequently, it may be wise to consider blending water from the softener with raw water before sending the water to the distribution system.

Also, a factor that must be considered is that softened water from an ion exchanger contains sodium, which may be harmful to persons who are on a low-sodium diet. This information should be provided to those who consume the water on a regular basis. However, potassium chloride (KCl) is sometimes used instead of NaCl. KCl, a colorless potassium salt, can be used as a regenerate in water softeners. Using potassium chloride will not release sodium into the water.

4.9 Nitrate Removal

Nitrate can be a serious health hazard for young children. The MCL for nitrate is 10 mg/L. When nitrate levels exceed the MCL, water system owners often choose to use alternative sources. For very small systems, acceptable water can be purchased, hauled in a tank truck and stored in the systems reservoir. A number of treatment technologies are available for nitrate removal. The use of ion exchange is probably the most appropriate for small systems. Special exchange resins are available specifically for nitrate removal.

Frequently, the nitrate removal exchange resin is layered on top of calcium and magnesium (hardness removal) exchange resin in a system similar to that described above in Section 4.8.

4.10 Corrosion Control

Corrosion is the process where metals are dissolved into surrounding water. Both internal and external corrosion can destroy piping and other equipment. Corrosion can also lead to taste and odor problems. Section 2.5g explains the corrosion process in more detail.

There are two strategies to reduce or control the corrosive tendencies of water; adjustment of the chemical characteristics of the water (primarily, pH control) and covering the surface of pipes with a protective coating.

4.10a pH Control

Of the five factors that affect corrosivity, pH is the most significant. Low pH contributes to the corrosivity of water. So raising the pH will reduce corrosivity.

There are a number of pH increase treatment options available to small systems to increase pH.

Aeration
Some waters may have excess dissolved carbon dioxide (CO_2). This is most likely to happen in slow moving streams or lakes when metabolic activity releases CO_2 and the lack of turbulence allows the dissolved CO_2 to buildup. A buildup of CO_2 results in a low pH because of the CO_2/H_2CO_3 equilibrium. An increase in CO_2 increases the carbonic acid (H_2CO_3), thus lowering the pH. If CO_2 is removed the process is reversed.

CO_2 is most prevalent in groundwater although it can occur in surface water under ice cover

The aeration process, as described in Section 4.6b, "scrubs" the CO_2 from the water. The result is a higher pH and a decrease in corrosivity.

Limestone Contactors
A limestone contactor, sometimes called a neutralizing filter, can be used to raise the pH of water. Limestone is calcium carbonate ($CaCO_3$). As low pH water passes through the contactor it dissolves the $CaCO_3$. Through a chemical reaction, similar to the CO_2/H_2CO_3 resulting in a higher pH and a decrease in corrosivity.

A limestone contactor is an inline canister device that is convenient for small system applications. A possible drawback with the use of a limestone contactor is that calcium ions are also released into the water which increases hardness.

Soda Ash
Soda ash (Na_2CO_3) can also be used to raise the pH. The chemistry is similar to the use of and causes a higher pH and a decrease in corrosivity results.

Soda ash is normally fed into the water system as a solution using a liquid chemical feed pump. The feed equipment is almost the same as that used to feed hypochlorites as described in Section 5.8.

Sodium Hydroxide
Sodium hydroxide (NaOH), commonly called caustic soda, is readily soluble in water and a very strong base. It can be used to raise pH in water systems, but it is extremely corrosive and can be very dangerous if mishandled. It is critical that workers who handle NaOH be well trained.

Diluted NaOH is normally fed into the water system using a liquid chemical feed pump. The feed equipment is almost the same as that used to feed hypochlorites as described in Section 5.8.

4.10b Chemical Coatings

Corrosion can be inhibited by adding chemicals to the water that adhere directly to the pipe surface or in combination with naturally-occurring constituents in the water form films or coatings on the pipe surface. These coatings prevent contact between the metal pipe surface and the corrosive water, providing a barrier to corrosion reactions.

Phosphates and Silicates
Silicates and orthophosphates are frequently used by small systems to form protective films on pipe surfaces. The protective coating prohibits the corrosive water from contacting the metal pipe. Sodium silicate and phosphate must be continuously added to the systems to be effective.

Carbonate Precipitates
When calcium and magnesium carbonates **precipitate** they can form a protective coating on the inside of water pipe. Whether or not the carbonates will precipitate depends on the pH and amount of alkalinity and hardness present in the water. If they all are relatively high, precipitation is enhanced.

Consequently, when limestone ($CaCO_3$) and soda ash (Na_2CO_3) are used to raise the pH there is a side benefit of the protective carbonate coating. In fact, some corrosion control strategies increase pH, alkalinity and hardness with the expressed goal of forming carbonate precipitates.

4.11 Radon Removal

Radon is found is some groundwater supplies and removal may be required if the MCL is exceeded. Carbon absorption is recommended as the best available treatment (BAT) for small systems (refer to Section 4.6a).

4.12 Control of Nuisance Growth

A number of different organisms can be real nuisances even though they may not be a direct health hazard. Some of these may contribute to taste and odor problems (algae, bacteria, etc.). Iron bacteria in wells can cause “red water.” Small aquatic organisms (insect larvae, small snails and freshwater shrimp) can plug inlet screens and pumps and contribute to taste and odor when they die and decay.

Properly sized and maintained screens can eliminate many larger organisms before they enter the system. Maintaining a trace chlorine residual throughout a treatment system will prevent algae from growing on the walls of open basins and reservoirs. Copper

sulfate can be applied to raw water reservoirs to control the growth of algae in surface water sources.

You should consult a water treatment expert, ATTAC, or ADEC to help design a strategy to control nuisance organisms.

4.13 Prevention of Tooth Decay

Sodium fluoride (NaF) is added to water in small systems to help prevent tooth decay. Other forms of fluoride are not usually used in small systems.

At optimum levels, 0.7 - 1.2-mg/L, sodium fluoride can reduce tooth decay among children by 65 percent. It is essential that the proper dosage is used because too little is not helpful and too much causes fluorosis (staining or pitting of teeth). An excessive overdose of fluoride can cause death. Fluoride has two regulated limits: the secondary MCL is 2.0 mg/L and the primary MCL is 4.0 mg/L. At no time should the level exceed 4.0 mg/L.

Sodium fluoride is fed into the water system using a fluoride **saturator**. The saturator consists of a chemical tank (similar to the hypochlorite feed system), a chemical feed pump, a feed water line (feed water must be free of hardness), and automatic water level control. It is called a saturator because a saturated fluoride solution is maintained in the tank. This is accomplished by filling the bottom of the tank with solid sodium fluoride. Feed water enters the tank at the bottom, under the sodium fluoride crystals, and dissolves the sodium fluoride as it flows upward. The solution in the tank above the sodium fluoride crystals is always saturated under these conditions.

4.14 Common Chemicals Used For Water Treatment

Chemical	Common name	Effect	Use
Calcium hypochlorite	Dry chlorine powder, pellet or tablet	N/A	Disinfection
Calcium Carbonate	Limestone	Increase pH	pH and corrosion control
Potassium chloride	N/A	Ion exchange	Water softener regenerant
Sodium carbonate	Soda ash	Increase pH	Corrosion control
Sodium chloride	Table salt	Ion exchange	Water softener regenerant
Sodium fluoride	Fluoride	N/A	Reduce dental caries
Sodium hexametaphosphate	Polyphosphate	Prevent red water	Sequestering agent
Sodium hydroxide	Caustic soda	Increase pH	Corrosion control
Sodium hypochlorite	Liquid chlorine bleach	N/A	Disinfection
Zinc Orthophosphate	N/A	Protective film	Corrosion control

Table D: Common Chemicals Used For Water Treatment

Chapter 5 – Disinfection

5.1 Background

Disinfection may be defined as the process used to control disease-causing organisms in an effort to prevent waterborne disease. Disinfection is probably the oldest and most widely applied water treatment process known to man.

Ancient Sanskrit writings indicate that early man boiled and filtered raw water to make it look and taste better. Although no one realized it at the time, these treatments made the water safe. Even today, when drinking water quality is suspect or unknown, public health officials recommend boiling water for eight to ten minutes to ensure the water is safe to drink.

However, boiling large quantities of water is not feasible for even the smallest public water supply systems. Consequently, public water systems have turned to other methods to control disease-causing organisms.

The most common disinfection method for potable water in use today is **chlorination**. Just as water is virtually the universal solvent, chlorine is nearly the universal water treatment chemical.

Chlorination has played a critical role in reducing the threat of waterborne infectious disease around the world. Many public health officials consider chlorine disinfection the most significant public health protection measure of the 20th century. In fact, *Life* magazine has cited filtration of drinking water and chlorination as "probably the most significant public health advance of the millennium."

Chlorination of drinking water saves lives and prevents the transmission of debilitating diseases such as cholera, hepatitis, typhoid fever and gastrointestinal disorders, such as dysentery, *giardiasis*, and *cryptosporidosis*, to name a few.

Continuous chlorination of drinking water began in the early years of the last century in Great Britain, where its application sharply reduced typhoid deaths. Shortly after this dramatic success, chlorination was begun in Jersey City, N.J. in 1908. Adoption by other cities and towns across the United States soon followed and resulted in the virtual elimination of waterborne diseases such as cholera, typhoid, dysentery and Hepatitis A. Before the advent of chlorination for drinking water treatment, typhoid fever killed about 25 out of 100,000 people in the U.S. annually, a death rate that is currently associated with automobile accidents.

In recent years, two new waterborne pathogens have caused drinking water professionals to re-evaluate the adequacy of their disinfection procedures. One is *Giardia* also known as Beaver Fever, and the other is *Cryptosporidium* which causes intestinal disorders. *Giardia lamblia* lives in the small intestine and is transmitted primarily when the infective cysts are ingested along with water. It gained notoriety some years ago when an

outbreak occurred in Banff National Park and was termed by the media as Beaver Fever because the local beavers were thought to be the source of contamination to the water supply.

Cryptosporidiosis (krip-toe-spo-rid-e-o-sis) is the disease, often called “crypto,” caused by a protozoa, *cryptosporidium parvum*, which is too small to be seen without a microscope. When people get infected with C*ryptosporidium* they can have watery diarrhea, stomach cramps, and upset stomach, or a slight fever. In the spring of 1993 in Milwaukee, Wisconsin, municipal drinking water was contaminated with *Cryptosporidium*. An estimated 400,000 people became ill and 100 people died. The Milwaukee outbreak was a stark reminder of the importance of public water supply disinfection.

Current drinking water treatment and disinfection practices in the U.S. provide the means to control most pathogenic bacteria, viruses and protozoa responsible for major outbreaks of waterborne diseases. Some outbreaks still occur, however, and are generally attributed to consumption of untreated water, insufficient or interrupted treatment and/or disinfection, failure to maintain an adequate disinfectant residual in the distribution system, and/or breaches in the water system.

Chlorination is easily the most widely applied method of disinfection for small water systems. No other single chemical finds broader application in the water treatment industry than chlorine. Forms of chlorine commonly used for disinfection by small-treated water systems include sodium **hypochlorite** (liquid bleach) and calcium hypochlorite granules or tablets. On-site generation of sodium hypochlorite has increased in recent years in Alaska’s small systems. Gas chlorine, once the most common disinfection process in the U.S., is rarely used by small systems due to safety concerns.

An important characteristic of an effective drinking water disinfectant is the ability to continue to prevent or inhibit microbial growth after the treated water enters the distribution system. Chlorine can provide this desirable lasting disinfecting capacity (residual chlorine) in the distribution system. The presence of this residual will protect against contamination that might occur in the distribution system after the water leaves the treatment plant.

Small-treated systems may also use passive disinfection treatment methods such as ultraviolet (UV) and ozone disinfection. However, application of these passive disinfection technologies is infrequent when compared to chlorine disinfection and may be prohibited in certain circumstances.

5.2 Basic Chlorine Chemistry

Chlorine chemistry is quite complex and can be confusing for operators who lack a technical background in chemistry. In this manual, we have simplified the presentation in order to emphasize the important aspects.

Chlorine readily reacts with water to create an effective disinfectant. It can be applied to water in liquid or gas form. For small systems, the liquid hypochlorite disinfection is most common.

If, for example, common bleach (sodium hypochlorite) is used, it reacts with water to form **hypochlorous acid** (HOCl) as follows:

$$NaOCl + H_2O \Longleftrightarrow HOCl + NaOH$$

Hypochlorous acid, in turn, can break down to form **hypochlorite ion** (OCl^-) as follows:

$$HOCl \Longleftrightarrow H^+ + OCl^-$$

It is these two forms of chlorine (HOCl and OCl^-), together referred to as **free chlorine residual**, that make chlorine a powerful disinfectant. However, hypochlorous acid is almost 100 times stronger than hypochlorite ion. At a pH of 7.5, both are present in almost equal amounts, but hypochlorous acid is more prevalent at lower pH values. Consequently, the disinfection process is more effective at pH values below 7.5.

When chlorine is added to water, it reacts with various contaminants in the water. This reaction between chlorine and the contaminants in water creates what is called **chlorine demand**. The amount of chlorine needed to satisfy this demand depends on the type and quantity of the contaminants present in the water. Once the demand has been satisfied, the remaining chlorine, if any, is called **chlorine residual**.

Chlorine dose - chlorine demand = chlorine residual

There are three types of chlorine residual: free, combined and total. The chlorine available as hypochlorous acid and hypochlorite ion is termed free chlorine residual. When chlorine combines with nitrogen compounds (ammonia and other organics) in the water, chloramines or **combined chlorine residual** is formed. Combined chlorine residual (chloramines) does have disinfecting capacity, but is much weaker than free chlorine residual.

Total chlorine residual is the sum of the free chlorine residual and the combined chlorine residual. Public water systems generally monitor for free chlorine residual, which is measured in mg/L.

5.3 Breakpoint Chlorination

As previously discussed, chlorine combines with many different organic contaminants in water to form combined chlorine compounds. Chlorine is such a powerful oxidizing chemical that as more and more chlorine is added to water already containing combined chlorine compounds, it reacts with and destroys the combined chlorine compounds. As more and more chlorine is added, the point at which all the combined chlorine compounds are destroyed is called the **breakpoint**. When more chlorine is added beyond the breakpoint only free chlorine residual is formed.

Breakpoint chlorination is an important concept, not only from the standpoint of providing a free residual (for maximum disinfection), but also because the presence of combined chlorine residual can result in offensive chlorine taste and odor problems. Adding sufficient chlorine to reach beyond the breakpoint (breakpoint chlorination) will both maximize disinfection and minimize chlorine taste and odor problems.

An important characteristic of an effective drinking water disinfectant is the ability to continue to prevent or inhibit microbial growth after the treated water enters the distribution system. Chlorine can provide a lasting measurable disinfectant residual in the water distribution system to protect against contamination that might occur after the water leaves the treatment plant. For some water systems, free chlorine residual may persist sufficiently long to provide residual protection.

Filtration, or any other water treatment practice that removes chlorine-demanding substances before chlorine is added, lessens the amount of chlorine required for disinfection. Water treatment prior to chlorine addition may also remove humic acids and other natural organic precursors before chlorination, thereby minimizing the formation of trihalomethanes and other disinfection byproducts (DBPs).

In practice, chlorine may be added at one or more points within the treatment process. Chlorine is typically added as the last step in the water treatment process. Following a period of contact time, disinfected water is pumped into the water distribution system to the customer.

5.4 Chlorine Residual

Typically, chlorine residual measurements are required on a daily basis. Regulations require two separate sample locations in the distribution system. A minimum of 0.2 mg/L entering the distribution system and a trace amount at representative locations within the system is generally required. This means that sufficient chlorine must be added to satisfy the demand and carry out disinfection, and still have some left over; the 0.2 mg/L free chlorine residual. A 0.2 mg/L free chlorine residual entering the distribution system is considered adequate to maintain a free chlorine residual throughout the distribution system.

Chlorine residual can be determined and expressed in a number of ways. The most commonly used method for small systems is a colorimetric method. In this procedure a chemical is used that turns pink in the presence of chlorine residual. The intensity of the pink color is directly proportional to the concentration of the chlorine residual. The intensity of the pink color is determined using a hand-held color wheel **comparator** or a portable instrument (a **colorimeter**). This method is referred to as the DPD method after the name of the chemical used.

The DPD colorimetric method can be used to measure both free chlorine residual and combined chlorine residual. The DPD chemicals usually come conveniently packaged for easy use and must be used before the expiration date.

5.5 Effectiveness of Chlorination

The two most important factors for the success of chlorination are the chlorine **concentration, C**., and the **contact time, T**., the length of time that the chlorine is in physical contact with the microorganisms. The destruction or inactivation of microorganisms (disinfection) is directly proportional to the concentration times the contact time (C x T), referred to as **CT**. Thus, if the chlorine concentration is decreased, the contact time will have to be increased to achieve the same level of disinfection. Because it is a weaker disinfectant, combined chlorine residual will require a longer contact time than free chlorine.

The temperature and pH of the water are also important considerations for the effectiveness of chlorination. At lower temperatures, the inactivation of bacteria tends to be slower than at higher temperatures. Changes in temperature may necessitate adjustments to the chlorine dosage.

As mentioned earlier, the pH of the water also affects the chlorination process because it determines the relative amounts of HOCl and OCl^-. The pH of the water should be checked regularly. If the pH is being maintained at higher levels in order to control corrosion, the chlorine dosage will have to be adjusted accordingly.

Values of CT can be calculated using a formula or may be determined from a set of tables provided in the ADEC regulations (18AAC80). These tables are designed for various temperatures, pHs and chlorine residuals, and for log removals ranging from 0.5 to 3.0. Log removals refer to the percent removal or inactivation of a specific target organism, where 1.0 log removal equals 90% removal, 2.0 log removal equals 99%, and 3.0 log removal equals 99.9%, and so on.

For *Giardia* removal, 3.0 log removal is the required level of treatment. Some removal may occur during filtration, but for surface water systems that do not filter, the disinfection process must provide all 3.0 logs of removal.

5.6 Sodium Hypochlorite (NaOCl)

Sodium hypochlorite (NaOCl) is available in liquid form and comes in 1, 5, or 55 gallon containers. It contains approximately 5% to 15% available chlorine. Common household bleach normally contains 5% chlorine. Sodium hypochlorite will lose strength during prolonged storage.

5.7 Calcium Hypochlorite [$Ca(OCl)_2$]

Calcium hypochlorite [$Ca(OCl)_2$] is a solid white substance also known as High Test Hypochlorite (HTH). It is available as a *65%* concentration and comes in granular or tablet form. It is a corrosive material with a strong odor that must be kept away from organic materials, such as wood, cloth, and petroleum products because of the dangers of spontaneous fire or explosion. Calcium hypochlorite should be stored in a cool, dry, and dark environment to minimize deterioration. Note carefully the precautions listed on the container label.

5.8 Hypochlorinator System

Liquid hypochlorite may be fed directly into the water using a **hypochlorinator** system (Figure 5.1). Solid hypochlorite must be dissolved in water before feeding with the hypochlorinator system.

When mixing hypochlorites with water, a corrosion-proof container made of plastic is required. The container size depends on the amount of hypochlorite solution that is needed. Most hypochlorinator systems have a 20 to 50 gallon mixing tank with a chemical feed pump mounted on top of the tank. Smaller tanks may be more appropriate for small systems because the smaller volume would mean keeping a fresher chlorine solution. Normally, the tank should hold about a week's supply of hypochlorite.

Some small systems use two tanks for mixing calcium hypochlorite. The calcium hypochlorite is mixed with the water and allowed to sit. The material that does not dissolve settles to the bottom of the tank and the solution is then transferred to the second tank. The hypochlorite solution is pumped from the second tank and injected into the water with a chemical feed pump.

Following is a short description of each of the hypochlorinator system components:

- Strainer – protects the pump by screening large pieces of undissolved calcium hypochlorite that might enter the suction line
- Foot valve – a check valve that keeps the pump and suction line primed by opening when the pump is operating and closing when the pump shuts down
- Weight – keeps the suction line from curling up and keeps the strainer and foot valve below the hypochlorite solution level
- Chemical feed pump – a positive displacement, diaphragm pump
- 4-in-1 valve (Four Function Valve)– serves four functions:
    1. Anti-siphon (automatic) - the valve prevents backsiphonage when pumping downhill or from the tank should there be vacuum created in the system
    2. Back pressure control (automatic) – supplies approximately 25 psi backpressure to prevent over pumping when little or no system

backpressure is present. This constant pressure exists even if the line pressure should drop to zero; also helps maintain the accuracy of the pump.

3. Pressure relief (automatic) – if discharge line is over-pressurized the valve opens sending the solution back to the supply tank
4. Line depressurization (manual) – by pulling both knobs, the discharge line will drain back to the supply tank to prevent the solution from spraying the operator

- Discharge Line – carries the hypochlorite solution from the pump discharge to the chlorine injection point
- Check Valve – prevents water from being forced back through the discharge line, the pump, and suction line into the hypochlorite solution (backflow)
- Injector Unit – a diffuser made of PVC or silver tubing extending one-third the diameter into water line. The diffuser is inserted into the line to a point that results in maximum mixing of the chlorine solution with the water flow of the plant.
- Flow switch – prevents the feed pump from accidentally running when there is no flow of water in the system piping

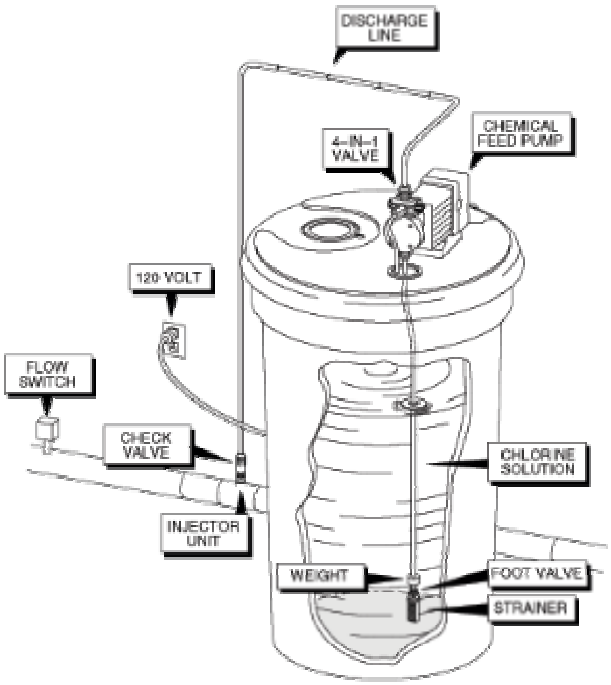

Figure 5.1: Hypochlorinator System

5.9 Chemical Feed Pumps

Chemical feed pumps are used to inject chemical solutions into drinking water for various treatment purposes. Typically, pump speed and stroke can be adjusted to control feed rate. The frequency of the stroke is adjusted with the speed knob, and the length of the stroke is adjusted with the stroke length knob. The speed knob allows you to adjust the strokes per minute as percent of maximum. If the knob is turned clockwise the stroke frequency is increased. The stroke length knob allows you to adjust the solution discharged during each pump actuation as a percent of maximum. Turning this knob clockwise increases the amount of solution pumped.

Chemical feed pumps can be used to inject chemical solutions either at a variable rate or a constant rate. If the plant flow rate varies with time, the chemical feed pump can be set to automatically adjust the pump feed rate in proportion to the changes in plant flow. With the variable rate system the pumping stroke frequency is controlled

by an electrical signal from a flow meter. You can also fine-tune the solution feed rate by manually varying the pump stroke length. When plant flow rate is constant, the feed pump is connected electrically to the well pump control system. When the well pump starts, power is automatically applied to the chemical feed pump and pumping continues until the well pump shuts down.

To prevent the feed pump from running when there is no flow of water in the system, a flow switch is installed in the plant flow line. The chemical feed pump is wired into the control circuit so that the pump cannot start if there is no flow of water.

5.10 Tablet Chlorinators

Tablet chlorinator systems use the solid calcium hypochlorite tablets instead of liquid sodium hypochlorite. The two main types of calcium hypochlorite chlorinators are called pellet and erosion chlorinators.

Pellet chlorinators are commonly mounted on top of the well and drop chlorine tablets directly into the well. A preset number of tablets are dropped based on the volume of water being pumped. The well casing must be clear of obstructions to ensure that the tablets do not become lodged before reaching the water level.

Erosion chlorinators consist of a canister to hold a supply of chlorine tablets and a chamber to allow water to flow over and slowly erode or dissolve the tablets.

Some systems use larger calcium hypochlorite tablets the size of a hockey puck. These units have the advantage of using chlorine tablets that are easy to handle and store. However, the chlorine dose they deliver tends to fluctuate greatly and is difficult to control. If the tablets get damp in the storage canister they stick together. Tapping the storage canister occasionally will help break them apart.

The storage canister has a sieve plate on the bottom, which allows only the bottom layer of tablets to come into contact with the water. The bottom layer of tablets are eroded as water flows through the sieve plate so that the inlet water flow controls the rate of chlorination. Higher flows result in higher chlorine delivery. The chlorinator itself is not a pressure vessel. It operates under a slight vacuum created by the suction side of the pump or by gravity flow. Typically, the tablets provide 65% available chlorine.

One disadvantage of tablet chlorinators is they are set to deliver specific amounts of chlorine at a given flow rate. Therefore, changes in flow and/or pressure can affect the chlorine dosage. However, these changes can be dealt with by installing flow proportioners and chlorine analyzers.

5.11 Storage and Handling of Hypochlorites

Chlorine tablets should be stored in a cool, dry location, and both liquids and solids should be stored in their original labeled container away from children and animals. All chlorine solutions should be stored in a dark place because light reduces the chlorine potency.

Both solid and liquid forms of chlorine are irritating to the skin and are poisonous in their concentrated form. They must be handled carefully and stored properly. Personal protective gear should be worn when handling all water treatment chemicals.

When mixing and working with chemicals wear rubber gloves to protect your skin. A half face respirator will protect your throat and lungs from the calcium hypochlorite dust that may become airborne when you open or dump a bag. A face shield protects you if the chemical splashes when you are mixing or transferring chemical solution to another tank and a rubber apron will protect your skin, as well as save your clothes from being ruined, if you spill the chemical on your body.

5.12 On-Site Hypochlorite Generation

On-site sodium hypochlorite generation has increased in popularity in Alaska over the past few years both in large utilities and at small systems, such as remote well sites. Sodium hypochlorite is produced on-site, which reduces shipping costs and concerns over safety associated with transporting chlorine solutions.

The process is fairly simple requiring only salt, electricity, and water. One pound of equivalent chlorine can be produced from 3.5 pounds of salt, 15 gallons of water, and approximately 2.3 kWh of electricity. The process produces a dilute sodium hypochlorite solution (0.8%) at a pH of 9. The product is very stable at this lower concentration, and with less degradation.

On-site sodium hypochlorite generation is a relatively straightforward process. First, a brine is prepared by adding salt and softened water, which is then diluted to approximately 3% for use. The 3% salt solution is pumped through one or more electrolytic cells to produce NaOCl.

Hydrogen gas is generated as a by-product during this process and must be vented to avoid creating an explosive environment. Another factor to consider is the hardness of the water used to produce the brine and process water. To reduce cleaning and maintenance costs, most systems require a softener that prevents the buildup of calcium carbonate scale on the electrolytic cell.

5.13 Mixed-Oxidant (MiOx®) Process

The MiOx® process is reported to produce a solution of mixed oxidants using 9 to12-volt DC current, NaCl brine, and the patented electrolytic (MiOx®) cell. Electrolysis of chloride solutions using the MiOx® design produces a mixed-oxidant solution consisting of hypochlorite, ozone and other chlor-oxygen species. Since the primary component of the solution is HOCl (the most effective form of chlorine), an effective chlorine residual can be maintained.

The mixed-oxidant solution is collected in a day tank (oxidants tank) and injected into water at rates appropriate to meet treatment objectives.

Since the only items used to generate the mixed oxidants on-site are salt, water, and electricity, no hazardous chemicals are used, transported, or stored. Therefore, on-site generation of mixed oxidants is safer than chlorine gas.

Although, MiOx® generators use brine to produce the mixed-oxidant solution, the addition of salt to the water supply is negligible. In fact, a 12-oz. can of Coke™ contains 140 mg/L of sodium, which is 88 times higher than the level of sodium added to the water by a MiOx® unit at a 1 mg/L dose.

5.14 Gas Chlorine

Chlorine gas is less expensive than other disinfectants, however chlorine gas is dangerous and can be lethal at low concentrations. Gaseous chlorine is greenish-yellow and visible in high concentrations. Chlorine gas is 2.5 times heavier than air. Since the gas is heavier than air, chlorine gas will settle into low areas if a leak occurs. Because of the dangers associated with storage, handling, and accidental spills, most small water systems disinfect with hypochlorites rather than chlorine gas.

5.15 Ozone

Ozone (O_3) is one of the most powerful and effective disinfectants available for use in water treatment. It is very effective against all three types of pathogenic microorganisms (viruses, bacteria, and protozoa) including *Cryptosporidium* and *Giardia.* The main problem with ozone is, like UV radiation, the absence of a persistent residual in the distribution system. Therefore, the use of ozone is often combined with chlorination to maintain a residual in the distribution system.

Ozone has been widely used as a disinfectant in water systems in Europe nearly as long as chlorine. It is gaining acceptance in the U.S. because of its

effectiveness against pathogenic protozoa.

Ozone can produce disinfection by-products, although they are different from those that may be produced by chlorination. Ozone may also be used to control taste, odor, and color because of its strong oxidizing properties.

Ozone is very unstable and must be generated on site. It is generated by passing a high voltage across an air gap through which air or purified oxygen is flowing. This process is very similar to the formation of ozone by lightning or an arc welder.

The ozone molecule (O_3) is highly reactive, bluish in color, and has a pungent odor. It is highly toxic when inhaled at even low concentrations.

5.16 Ultraviolet (UV) Light

Ultraviolet (UV) light, or radiation, is used by some small water systems for disinfection. UV radiation, which is generated by a special lamp, effectively destroys bacteria, viruses and protozoa (Figure 5.2).

UV radiation systems:

- produce no known toxic residuals.
- require short contact times.
- are easy to operate and maintain.

Water treated by UV radiation must be relatively clear and colorless to allow the light to penetrate and kill the microorganism. The water should be free of any materials that might build up on the surface of the UV bulb. A film on the bulb could decrease the output from the bulb. Iron, manganese, and hardness are the most common materials that could cause this problem.

It is dangerous to look directly at a source of UV radiation, because the UV radiation can seriously and permanently damage your eyes. For this reason three different levels of safety should be provided with UV system:

1. UV system with an inspection hole to determine if the light is on.
2. UV system with a photo sensor that will automatically determine if the light is on or off. If the light is not on, an alarm will sound and/or the water will be shut off with a solenoid valve.
3. UV system with a transmittance detector that will not only determine if the light is on, but will also measure the intensity of the light after it has passed through the water. If the light that is transmitted through the water is not sufficient, the detector will shut the water off to the system until the problem is corrected.

Consult ADEC to determine the level of safety that should be provided when using UV radiation for disinfection.

UV radiation does not provide any residual in the distribution system. The lack of residual means that extra care must be taken to make sure the distribution system is thoroughly disinfected during installation.

The combination of chlorination and UV radiation would be a good choice for any situation where residual is needed or redundancy is required.

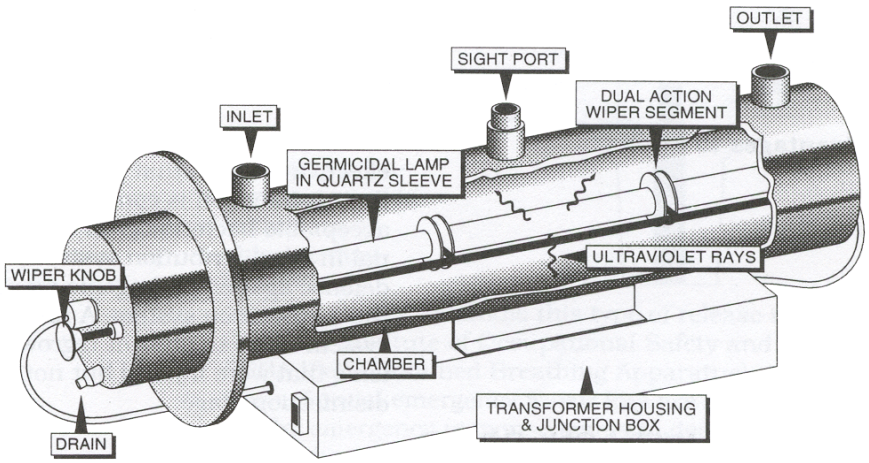

Figure 5.2: UV Disinfection System

5.17 Disinfection By-Products

There is no question that the use of chlorine as the primary disinfectant used for water treatment in the United States has had an enormous impact on the prevention of waterborne diseases. However, when chlorine is added to waters containing naturally occurring organic matter, some undesirable **disinfection by-products (DBPs)** can result. If consumed over long periods of time, some DBPs may cause undesirable health effects, including cancer. Consequently, regulatory standards have been established to limit the amount of various DBPs that are acceptable in a public water supply.

Raw waters containing high levels of organic matter, such as lakes and tundra ponds, are at a higher risk of forming DBPs than waters containing low levels of organic matter, such as most groundwater sources. Consequently, small systems utilizing chlorinated surface water sources are more likely to have DBP problems than those using chlorinated groundwater sources. Therefore, DBPs that result from chlorine disinfection have been studied more extensively than DBPs that might result from the use of alternative disinfectants such as ozone.

The first group of DBPs to be regulated were the trihalomethanes or THMs. In the late 1970's, federal drinking water regulations established a maximum contaminant level (MCL) of 0.10 mg/L for total THMs for public water systems serving 10,000 or more persons. Soon, all public water systems, regardless of size, will be required to monitor for THMs and other DBPs, as well, and the MCL for THMs will be lowered to 0.08 mg/L. Additional information regarding the monitoring and reporting

requirements for THMs and other DBPs can be found in Section 8.12.

The best DBP control strategy is to remove organic matter from the water before it can react with the disinfectant. In some cases, small water systems may be able to effectively control DBP formation by installing activated carbon cartridge filtration or carbon canister filtration systems (see Chapter 4). System owners should contact ADEC drinking water engineers or local water quality consultants to determine the best treatment option for their particular system.

Chapter 6 - Water System Operation & Maintenance

6.1 O&M of Groundwater Systems

A sound maintenance program saves you money by minimizing premature failure of water system components and equipment. Pumps and equipment do not last forever. Every ten to twenty years, well components and equipment may require mechanical service from a qualified pump service company or well pump installer.

However, regular inspection and preventative maintenance will help ensure continued, reliable operation of the entire water system. Water system maintenance is very important, but it is often delayed because the well, the well components and the piping system are out-of-sight and, therefore, out-of-mind.

Well site visit
Visit your well site regularly to perform routine monitoring and preventative maintenance. Visibly check the above ground components. The well cap should be secure and watertight. Joints, cracks or loose connections on the well casing should be sealed to prevent surface contaminants from entering the well. Pumps, pipes, and valves should also be tested on a regular basis, and the cause of any changes in water quantity and quality should be investigated.

The area immediately around the wellhead should slope away from the well casing to prevent surface water from collecting (pooling) near the well. Protecting a well from possible contamination cannot be over emphasized. Shallow wells draw water from near the land surface and may be directly affected by activities around the well.

Well site protection
Although it is not a complete list, the sanitary procedures listed below will help you protect your water source:

- Do not store or use hazardous substances, such as gas, oil, pesticides, or paints, in or around the well house.
- Check the sanitary seal and well casing vent monthly to make sure the seal is intact and the screen has not deteriorated. A properly functioning and vented sanitary seal on top of your well casing keeps potential contaminants from entering the well.
- If your well has a pitless adapter (water pipe exits the well casing below ground level rather than through the top of the well casing), make sure there is an adequate seal present to prevent contaminants from entering the well around the adapter. The pitless adapter may be visually inspected when the well cap is removed by shining a light into the casing. You can also use a mirror to reflect sunlight into the well casing and inspect some of the internal components.
- Keep vegetation from growing around the immediate area of the wellhead and well house.
- Protect the well and distribution system from freezing. Insulate the pipes; place a lamp, heat lamp, or

heater (with proper electrical connections) in the well house. Be aware that, if lamps burn out, the system may freeze-up. Check the lamps frequently.

Each year wells are threatened, damaged, and destroyed by vehicle accidents that occur near the wellhead; for example, fuel and fertilizer tank leaks or a pesticide truck spill. These are only a few of the types of accidents that threaten the safety of an aquifer on a regular basis. Not allowing these potentially contaminating activities around your well can minimize the threat of possible contamination or destruction. By monitoring all activities and/or moving potential troublesome items from the area, accidents to the well may be avoided or minimized.

Anticipating possible accidents and responding accordingly takes a small amount of time compared to the cost of cleanup or environmental damage. Permanent contamination of a well ultimately means loss of property value and may involve liability

6.2 Well House Inspection

Inspection and maintenance of the well house should be done on a regular basis. Keep the well house clean and uncluttered. If the motor is mounted above ground, check the motor temperature by placing the back of your hand on the motor casing. The casing will normally be warm to the touch. If you must remove your hand quickly because the heat is intense, the motor may be overheating and the cause should be investigated.

Senses
An operator's senses are the best tools available for detecting abnormal water system conditions. "Look, listen, smell, and touch" are the best tools that can be used to warn operators of potential or existing problems. Look for water, air, or lubricant leaks. Listen for unusual sounds coming from the pump, motor, valves, or controls. Smell the air for burning electric motor insulation. Touch the motor casing and pump casing to check for vibration and heat.

Equipment inspection
The well house, pumps, and water system equipment should be inspected daily.

- Check the well house for vandalism or damage.
- Collect a water sample in a clear container and inspect it for sediment. Is the water clear?
- Look at fittings and valves, note any leaks and repair them if necessary.
- Verify that containers of poisons, pesticides, petroleum products, or other hazardous materials have not been moved into the pump house or near the well.
- Do not use the pump house to shelter animals or as a storage shed.
- Check for exposed and bare electrical wires. All wires should be cased in conduit and wire-splices contained within junction boxes.

Operational log
A daily operational log sheet should be

created and tailored to record data for the specific well house and water system being operated.

- Record the date and time you visit the well house and any maintenance done or operational changes made.
- Record pressure gauge and water meter readings.
- Pay special attention to the pump discharge pressure gauge. This reading is used to monitor the efficiency of the well pump.
- Similarly, the suction and discharge pressure gauge readings are useful for monitoring performance on end-suction centrifugal booster pumps.
- Observe the on-off pressures for the hydropneumatic tank.
- Record the pump hour meter reading. The pump hour meter is normally located in the control panel and records the amount of time that power was delivered to the pump (the length of time water was pumped).
- Check the well pump to ensure it is not short cycling. Record the pump cycles-counter reading. The pump cycles-counter tallies the number of times the pump motor cycles (turns) on and off. If cycles are too frequent, the storage tank level controls are improperly set or the hydropneumatic tank may have lost its air cushion and is waterlogged.

Well house inspection

- Make certain the well house access door is locked after completing the routine maintenance and inspection visit.
- Review water monitoring data and analyses, and compare to past results, on a regular basis.
- Find and fix the cause of any change in water color, taste, or odor. Shock-chlorinate the well only when necessary.
- Keep a permanent record of the static water level from a reference point such as the top of the well casing. These measurements provide early warning of pump and well capacity problems.
- Measure the static water level at least twice per year and record the measurement, time, and date. Measurements should be made on approximately the same dates each year, usually in the spring and fall. The well should be allowed to sit without pumping for one to two hours before measuring the static water level.

Records

Records should be accurate and consistent. Good record keeping will provide you with a historical log that can be a very helpful resource when troubleshooting problems. Start a file specifically for the records of your water system. The records file does not have to be fancy or elaborate. For small systems a three-ring binder is sufficient. Keep records in the your home or office, if you do not have a system office. Do not keep permanent records in the well house. Records kept in the well house are subject to moisture damage and may easily fade or be completely ruined.

Record file
Keep the following records in your file:

- The well log
- Pump data that includes the date the pump was installed, the brand and model number
- A record of yield and drawdown
- Dates pump was replaced or pulled for maintenance
- Water quality monitoring records
- Copy of your last sanitary survey
- Name and phone number of your local pump maintenance technician
- Local ADEC office phone number
- Name and phone number of organizations providing training and technical assistance (Appendix 4).

6.3 Chemical System Inspection

- Check the level of chemical solution in the tank. Note the amount of solution used since the last visit and replenish if necessary. As a general rule of thumb, if the solution is thirty days old or older, replace it with a fresh solution. Try not to mix more than a seven-day supply.
- Record the date the solution was made on the vat or other readily visible structure and in the log book.
- Inspect all the chemical feed pump fittings for leaks.
- As you observe the discharge line, can you see solution being pumped?
- Make sure the foot valve is below the surface of the liquid.
- Does the pump sound normal, like it has in the past, or is it louder?
- Feel the pump with the back of your hand to make sure it is not running hot.
- Inspect the electrical connections and note any corrosion or looseness.
- Calculate and record the dosage of chemical you are feeding.

6.4 Operation and Maintenance of Pumps

Service manuals
When performing pump installation or maintenance procedures, always refer to the manufacturer's service manual provided with your pump.
Manufacturers' service manuals should be available for all water system equipment. Service manuals provide detailed instructions for the replacement of impellers, seals, and bearings. Be sure to follow the manufacturer's instructions for the particular pump being serviced. Service manuals should be read carefully, filed, in a convenient place and consulted whenever servicing is required.
Consult with a reputable pump manufacturer or local pump service company before purchasing a pump. Purchasing a pump that is oversized in anticipation of future system requirements can lead to problems and waste electricity.

Pump problems
Be sure pumps do not operate against a throttled (partially closed) discharge valve. Partially closed valves cause the pump to operate below capacity. This arrangement not only wastes horsepower, it also creates internal vibration and pressure surges that can damage your pump.

Pumps will last longer and provide reliable service if a regular maintenance schedule is followed. Periodically check the following:

- Pump discharge – The operation of the pump should be checked on a regular basis, at least every six months. Discharge will decrease if abrasive materials such as sand have worn the impeller, if the impeller is jammed, or if the system is air-locked. Replacing a worn impeller and wear rings may restore a pumps performance to nearly its original output.
- Vibration – Excessive vibration can be caused by loose mounting bolts, a broken impeller, worn bearings, or a misaligned shaft. A centrifugal pump should run smoothly. If it vibrates, shut it down and determine the cause. Vibration may also be the result of cavitation. Cavitation produces distinct erosion marks on the volute and impeller similar to those left by hitting a hard surface with a ballpeen hammer. A cavitating pump may make a loud pinging noise.
- Debris – Is there sand and sediment in the water? Submersible pumps often pump sand. If the screen is missing or damaged, the sand may reach the pump. Sand will damage the impeller and impede the flow. Reduced pump discharge or unusual noise may indicate debris in the pump.

Pressure gauge and electric meter
Submersible pumps are inspected infrequently. Therefore, recording the amount of water produced by the well, recording the pressure gauge reading on the pump discharge pipe and recording the electrical meter reading (submersible pump usage) are crucial to determining when a submersible pump should be pulled for service or replacement.

Incrustation
Declining well yield may indicate that the pump needs to be serviced or replaced. A declining well yield may also indicate an incrustation problem. The main material causing incrustation is calcium carbonate. Incrustation occurs when the well screen and the water-bearing formation around the intake become clogged by calcium carbonate precipitate.

Correcting an incrustation problem involves pulling the screen and either removing the incrusted material or installing a new screen. However, removing well screens is not an easy process and may not be practical. Incrustation can be dissolved with the screen still in the well. In this case the screen and water-bearing formation are treated with acid.

If incrustation is severe enough, the well may have to be completely redeveloped. You should consult with a reputable pump manufacturer or local pump service company for the proper procedure to correct incrustation problems.

Iron bacteria
Iron bacteria occur naturally in the soil and may be introduced into the groundwater during the well drilling process. These bacteria metabolize soluble iron and, as a by-product, form a gelatinous slime or mat. This mat may appear as a reddish, slippery substance on the inside surfaces and parts of a toilet tank.

Sulfur bacteria
Once this mat of iron bacteria is established on steel pipes, such as the well casing, it may provide a haven for sulfur bacteria, another troublesome microorganism. Some sulfur bacteria convert sulfides to elemental sulfur, which combines with bacterial filaments to clog pipes. Another group of sulfur bacteria generate hydrogen sulfide gas, which is corrosive to pipes and has a foul smell like rotten eggs. Certain sulfur bacteria may produce sulfuric acid that can also cause corrosion of pipes.

As mentioned above, the slime mat produced by the iron bacteria provides a favorable environment for the sulfur bacteria. This slime mat also encloses and supports sites of corrosion, which may be the cause of the odor, taste, and staining problems commonly encountered with well water.

Static and pumping water levels
Declining well yield may be the result of a declining static water level? The static water level and pumping water level should be compared to previous records. Records will reveal past static water levels and help identify the cause of the declining yield.

Above ground pumps

Lineshaft turbine pumps and above surface pumps and motors require more maintenance, but they are also much easier to access. Operators should check daily for irregularities in motor and pump performance. Irregularities that must be noted include:

- Changes in sound of a running pump
- Unexplained temperature changes on bearings
- Seal chamber leakage
- Sudden pressure gauge drops
- Increased motor or pump vibration or heat

Any irregularities should be investigated and corrected**.** Pressure gauges should be observed and readings recorded daily. Also, the well house flow meter and electrical meter readings should be observed and recorded.

Bearings and sleeves
Pump bearings and sleeves that require lubrication should be checked to make sure they contain the correct amount of grease. Grease should be added as needed. Old grease should be flushed out by pumping new grease into the bearing.

Pump bearings are designed to have a minimum service life of more than thirty years when properly installed, operated, and maintained. Contamination of bearing lubricant is a far greater danger to bearing life than overloading, overuse, or fatigue. Grease according to manufacturer's recommendations, which will be approximately twice per year (semiannually). Do not over-grease bearings. More grease is not better.

Seals

Pumps have seals on the shaft that stop air from getting into the pump and prevents water from leaking out between the volute and the shaft. Seals may be mechanical or packing type.

Packing is designed to allow leakage of a small amount of water. This helps cool the pump shaft. Packing glands should be tightened until water barely drips from the packing. One or two drips about every five seconds is adequate. Mechanical seals should not normally leak water.

Semi-annual maintenance should include:

- Inspect shaft packing
- Replace packing, if necessary
- Observe mechanical seals for signs of leaking
- Check stuffing box packing glands for free movement
- Clean and lubricate packing gland bolts
- Check pump and driver alignment

Priming

Never start a centrifugal pump unless it is primed. Priming a pump means that the volute is completely filled with water and all air removed.

Spare parts inventory

A spare parts inventory should be maintained as insurance against delays in receiving parts. Delays may result in serious downtime. Pump usage, past repairs, and maintenance records will determine the minimum number or spare parts that should be stocked. Spare parts should be stocked when the pump is purchased. Consult with the pump installer and pump manufacturer to determine what critical spare parts should be kept on hand.

Remote water systems in Alaska must factor shipping time into the creation of a spare parts inventory. Delivery may take five to seven days or more in many parts of the state. It is probably wise for small water systems to have a spare pump on hand and ready to run, rather than wait for the pump to fail and then start overhauling it.

6.5 Motor Maintenance (Non-Submersible Pump)

Lineshaft motor inspection -The motor for a lineshaft turbine pump is usually located above ground on a cement base. The motor can and should be visually inspected on a regular basis.

- Check the oil quantity and condition on oil-filled motors
- Check the color of the oil in the motor housing through the oil inspection sight window or inspection plug. Oil should be a light rich bronze color. If it is solid black or you see sediment in the oil, change it.
- The oil may be emulsified (cream-like appearance), which indicates that water has entered the cavity.
- If there has been leakage, or other problems, correct it and make certain that the oil is refilled to the proper level the correct grade of oil.

6.6 Operation and Maintenance of Valves

Valves
Valves are used to regulate water flows, reduce pressure, provide air and vacuum relief, and blow off or drain water from the system. Valves are also used to prevent **backflow** and to isolate sections of the piping system for repair and maintenance. Many types of valves are used in the water industry, but all have basically the same function, to control or stop the flow of water in pipes.

Valve inspection program
A well-organized valve inspection program is essential for proper system maintenance. Valves normally suffer from a lack of operation, not wear. Valves four inches and larger should be **exercised** semi-annually. Exercising valves means to open and close the valve manually to assure they operate properly and easily. When exercising valves, they must be opened and closed slowly. If they are closed quickly **water hammer** may occur. The rise and fall in pressures, or water hammer, can cause serious damage to the distribution pipes and components.

Valves in a distribution system allow small sections of the distribution lines to be isolated for emergency maintenance.

Inspection items
A good valve inspection program includes:

- Check the location of each valve as well as the measurements to established reference points, such as poles, trees, hydrants or buildings.
- Exercise valves in both directions; fully closed and fully open. Record the number of turns required to close the valve. Any valves that operate in the opposite direction from normal (normal: “righty-tighty; lefty-loosey”) should be noted. Leave valves in a position one-half turn from the fully opened or fully closed position.
- Most valves should be left in the open position, but valves that normally remain closed should be noted.
- Valve boxes should be checked, debris removed, raised or lowered to grade, or replaced as necessary to accommodate current local conditions.

Small valves should be inspected annually and checked to make sure the handle and valve stem move freely. Tightening the packing nut, located on the top of valves, one-half to one full turn to stop leakage around the valve stem.

Gate Valves
The most common type of valve used in the water distribution system is the gate valve (Figure 6.1). It receives its name because of its gate-like operation. The most common gate valve is one with a non-rising stem; a valve in which the stem does not rise as the valve is opened.

The valve is reasonably dependable, has an almost unobstructed waterway when open, is very economical in smaller sizes, and can be installed underground with a minimum cost. A gate valve should not be used for throttling flow or for infrequent operation. It should be operated in the full-open position or left in a full-closed position.

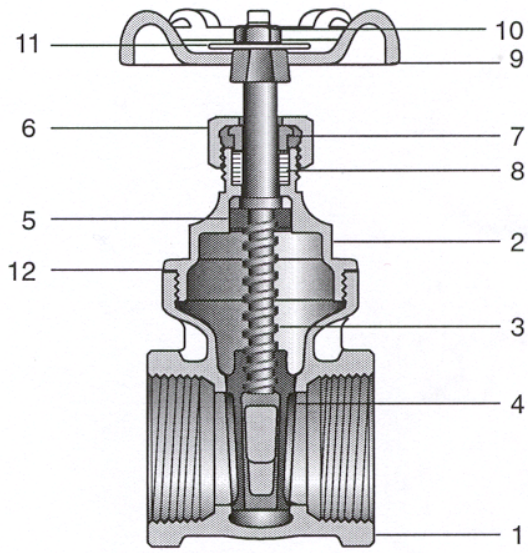

1 – Body	7 – Gland
2 – Bonnet	8 – Gland packing
3 – Stem	9 – Handwheel
4 – Disc	10 – Wheel nut
5 – Lock nut	11 – Name plate
6 – Packing nut	12 – Bonnet gasket

Figure 6.1: Gate Valve

Globe Valve

Globe valves are installed where there is to be a frequent change of operation. It receives its name because the main body is globelike in shape (Figure 6.2). Because of its design, this type of valve offers a significant resistance to the flow of liquids but does provide a more positive shutoff. Globe-type valves would not be used if the flow rates are important to the installation. The design of the valve is such that it must be installed in the correct position with the flow of liquid. Oftentimes, this direction is indicated by an arrow on the valve itself.

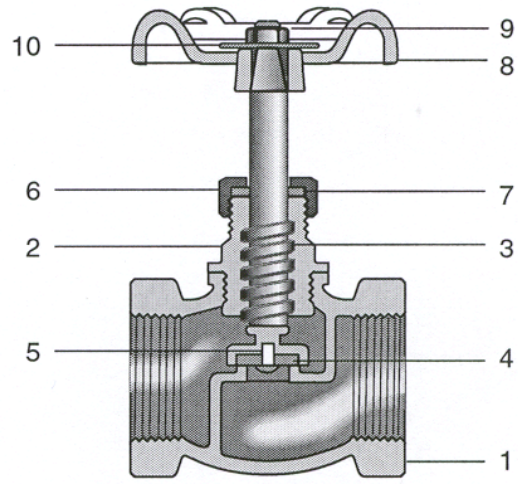

1 – Body	6 – Packing nut
2 – Bonnet	7 – Gland packing
3 – Stem	8 – Handwheel
4 – Disc	9 – Wheel nut
5 – Disc bolt	10 – Name plate

Figure 6.2: Globe Valve

Check Valve

A check valve is designed to allow flow in only one direction. The most common use of check valves in a water system is on the discharge side of pumps to prevent backflow when pumps shut down. A foot valve is a special type of check valve installed at the bottom of the pump suction so the pump will not lose its prime when power is shutoff.

The most common type of check valve is a swing check (Figure 6.3). Installed in the correct position, the flow of the liquid opens the disc allowing the fluid to pass. Should the flow reverse, the

pressure and the disc's weight close the disc against the seat, stopping backflow.

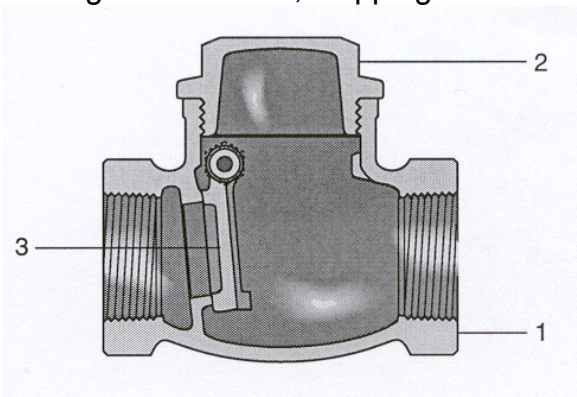

1 – Body	
2 – Cap	
3 – Disc	

Figure 6.3: Check Valve

Ball Valve

Ball valves offer little or no resistance to the flow of liquids. One of its features is that a 90° turn quickly opens or closes the valve completely. The handle position also indicates whether or not the valve is in the opened or closed position. Its simple design allows the valve to operate easily and offers ease of repair (Figure 6.4).

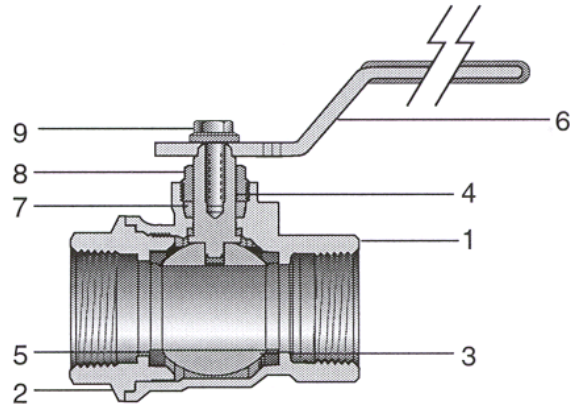

1 – Body	6 – Lever handle
2 – Body end piece	7 – Gland packing
3 – Ball	8 – Packing nut
4 – Stem	9 – Handle bolt
5 – Seat	

Figure 6.4: Ball Valve

6.7 Operation and Maintenance of Pressure Tank

Hydropneumatic tanks

Hydropneumatic or pressure tanks (Figure 6.5) are frequently used in small Alaska water systems. They maintain distribution system pressure. Generally, when service to more than fifty houses is anticipated, storage, other than a pressure tank, should be provided.

Tank types

Tanks are constructed of steel or fiberglass. The most common types of pressure tanks in use are the diaphragm, the bladder, and plain galvanized pressure tanks. They are not a good storage vessel for fire protection purposes due to the small volume of water within the tank.

Pressure tank system

The typical hydropneumatic system is made up of the following:

- Tank – stores the water
- Air volume control – controls the air volume
- Relief valve – prevents excessively high pressure
- Inlet pipe – allows flow of water into system

- Pressure gauge – monitors pressure
- High/low water level controls – regulates water level
- Discharge piping/air – discharges water from tank; forces additional air into the tank to increase pressure.

Pump cycle
The water supply pump in hydropneumatic tanks starts when the pressure drops to a predetermined low pressure (cut-in pressure). As the tank fills the energy from the pump pressurizes the pocket of air at the top of the tank. When the pressure builds to a predetermined high pressure (cut-out pressure), the pump stops and compressed air forces the water out of the tank and into the distribution system. When the pressure falls to the cut-in pressure (often 30 to 40 psi), the pump starts up again, and the cycle is repeated.
The pressure tank prevents frequent start/stop cycling that can be extremely hard on the pump. The cycle rate is the number of times the pump starts and stops in one hour. Six to eight pump cycles/hour with a minimum pump run time of one minute is the recommended standard.

A pressurized storage tank must have provisions to replenish the air since water tends to absorb air. The tanks are pressurized with an air compressor that pumps air into the tank. Bladder tanks or tanks with optimum air volume controls generally are set up for one-third air and two-thirds water. Off-the-shelf galvanized tanks have an equal volume of water and air.

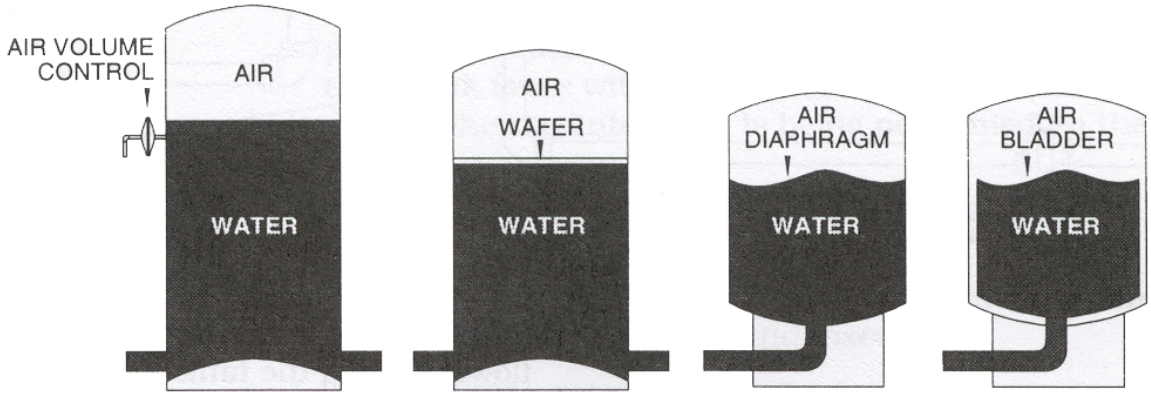

Figure 6.5: Hydropneumatic Tanks

6.7a Diaphragm and Bladder Pressure Tanks

Diaphragm and Bladder Tanks
Diaphragm and bladder type tanks use a flexible separator that completely isolates the air from the water. The tank is pre-charged at the factory and has an air charging valve installed on the top of the tank to allow the installer to change the tank pressure in the field to accommodate different system pressures. If the pressure switch is set

to start the pump when the pressure drops to 30 psi, the air pre-charge pressure in the tank should be 28 psi.

Table E lists the recommended recharge pressure for different systems.

Pressure switch setting	Tank discharge (psi)
20 – 40 psi	18
30 – 50 psi	28
40 – 60 psi	38

Table E: Recommended Recharge Pressures

Waterlogged tanks
A water system may use pump cycle counters to tally the times that the pump cycles on and off. If cycles are too frequent it is an indication that the storage tank level controls are improperly adjusted or that the hydropneumatic tank has lost its air cushion and is **waterlogged**. This cycle will continue over and over, eventually causing damage to the pump. To confirm a waterlogged tank, install a pressure gauge on the system. If the gauge shows a steady drop in pressure, even though no water is leaving, the tank will need to be drained and refilled.

Recharging a waterlogged tank:
- Shut off electrical power to pump
- Lockout/tagout breaker box
- Locate and remove the 1½" or 2" pipe plug that is located about 1/3 of the way down from the top of the tank
- Water will drain from the tank when the pipe plug is removed
- Drain the tank completely, if possible
- When the water stops draining out, replace the pipe plug, using Teflon tape or thread sealer
- Remember to disinfect before putting the system back in service after cleaning or repairs are complete
- Reconnect electrical power to the pump and run through a normal cycle
- Check for leaks
- Determine reason for the air-add system failure and correct it

The air-add system used by a submersible pump/galvanized tank setup has 3 critical parts:

1. Air volume control (air release type)
2. Check valve with snifter valve at tank
3. Bleed-back valve in the well

Note that failure of any one of the listed critical parts will cause the tank to become waterlogged.

To check pressure tank air charge:
- Disconnect electrical power to pump
- Lockout/tagout breaker box
- Open nearest faucet and completely drain tank
- Check pressure with a regular tire gauge using the air charging valve located on the top of the tank
- If air pressure is more than 2 psi below pump cut-in pressure, add air with tire pump or air compressor
- Use a soap solution to ensure air charging valve is not leaking before replacing cap

Note: If the pre-charge pressure is low, you will generally find that the tank feels heavier than it should when you rock it, indicating water remains inside the tank on top of the bladder. Seldom does adding air successfully restore proper operation. If air pressure is too high, remove air as necessary.

To test for bladder leakage:

- Disconnect power to pump
- Lockout/tagout breaker box
- Drain all water from tank bladder by opening a faucet closest to the tank
- Remove valve cap from air charging valve and release all pressure possible by depressing valve core
- When air stops coming out of valve, remove the valve core to release remaining air
- Disconnect all piping to tank
- Carefully turn tank upside down or lay the tank on its side
- Retained water in the tank may cause sudden weight shift when lowering. Support tank so tank cannot fall when being lowered or inverted.
- Water will run out of the air charge valve if bladder has a leak
- Some bladders can be replaced, but it may be cheaper to replace the tank. If you decide to replace the bladder yourself, be sure to follow manufacturer's instructions and recommendations.

Air charge valve replacement

- Disconnect power to pump
- Lockout/tagout breaker box
- Drain all water in system by opening faucet closest to tank
- Depress valve core to release all air pressure in tank. When air stops coming out of valve, remove core from inside of valve to release remaining air.
- Remove air charge valve
- Use Teflon tape on the new valve. Thread valve into tank and tighten.
- Do not over tighten!
- Recharge the tank with air pressure according to Table E above

6.7b Galvanized Pressure Tanks

Galvanized pressure tanks

Galvanized pressure tanks can be mounted in either a horizontal or vertical position. The tank discharge should always be near the bottom of the tank. The principle of how this tank operates is similar to the diaphragm and bladder tanks, with the exception that these tanks have no barrier between the water and the air cushion (air-water interface).

Maintaining air pressure

To maintain the proper air pressure inside the tank, a special valve known as an air volume control valve is mounted on the tank at the level where the water will be when the pump starts. When the pump starts, the diaphragm in the valve is drawn toward the outside by pump suction. Air enters through the snifter valve if the water level in the tank is above the air control. When the pump shuts off, the pressure equalizes, and the diaphragm moves back by spring pressure and forces air into the tank.

Leaky tanks

Galvanized pressure tanks are usually low maintenance. But every so often the air volume control valve will fail. Water will start dripping from the valve and indicates the valve should be replaced. Over time, galvanized tanks will rust and may begin to leak. It is not

a good idea to weld the tank to stop the leak. Welding on the tank will actually accelerate the corrosion and cause the tank to deteriorate within a short period of time and the tank may become waterlogged.

Excessive air in water
If customers complain about milky water or air bubbles, check to see that the air-volume control valve on the pressure tank is working properly. In most cases, the air-volume control valve is the cause and should be replaced.

Air Volume Control Replacement
- Shut off electrical power to pump
- Lockout/tagout breaker box
- Partially drain the tank until the water level is below the air volume control connection
- Remove the small line from the pump suction line to the air control valve
- Remove the old air control valve with a wrench
- Use Teflon tape on the pipe nipple
- Install the new air volume control
- Do not over tighten!
- Install small line from pump suction to new air control valve
- Reconnect electrical power to pump and run through normal cycle
- Check for leaks

Pump cycles
Most pumps and systems come from the manufacturer with the pressure switch preset. Many small water systems deliver about 40 psi to each house. Pressure switches are set to start the pump when the pressure drops close to 20 psi, and shut off the pump near 40 psi. Due to **backsiphonage** concerns, some system may be preset at 30/50.

Keep a good operational pressure gauge on the pump and check it periodically as the pump goes through its cycle. A pump cycle check will confirm that the system is operating at the preset pressures, and at its most efficient cycle.

Tank size
To determine if the size of the pressure tank is adequate refer to Table F. Example: If the pump puts out 18 gpm, and the water system pressure is between 30-50 psi, a 315-gallon pressure tank is recommended.

Pump Capacity (gpm)	Pressure-Switch Range Setting (psi)				
	20-40 psi	30-50 psi	40-60 psi	50-70 psi	60-80 psi
4	*42	82	82	120	120
8	82	120	180	220	315
12	120	180	220	315	315
15	144	220	315	525	525
18	180	315	315	525	525
24	220	315	525	525	1000
32	315	525	525	1000	1000

Table F: Pressure Tank Selection Chart

* Number denotes pressure tank size in gallons

6.8 Storage Facilities Operation and Maintenance

Function of storage tanks
Water storage facilities located on water distribution systems are used to average out or equalize flow rate demands on the water supply system. Maintenance of adequate pressure throughout the system is critical. Low pressure might result in system contamination due to backsiphonage. Low pressure can indicate improper connections and too high a pressure can stress system components, cause high leakage rates, and can force air out of with water. Other functions of water storage facilities include increasing operating convenience, leveling pumping requirement (to keep pumps from running 24 hours a day), decreasing power costs, providing water during power source or pump failure, providing large quantities of water to meet fire demands, and providing surge relief (to reduce the surge associate with stopping and starting pumps).

Type of storage tanks
Besides hydropneumatic tanks, there are five types of storage tanks in common use:

1. Ground level tanks – constructed at ground level and located above a service area to maintain pressure throughout the area
2. Elevated tanks – elevated above the ground and located above a service zone in order to maintain an adequate and uniform pressure throughout that area
3. Clear wells – constructed partially or totally below ground to store finished water from a treatment plant and in many cases used to achieve required contact time
4. Standpipes – constructed at ground level having a height greater than the diameter
5. Surge tanks – constructed at ground level and often used to control water hammer or regulate flow of water

Storage tank inspection
Regardless of the type of storage tank installed they should be inspected regularly. The storage facility is a critical part of the water system. A basic storage tank operation and maintenance plan helps ensure the water remains safe to drink and aesthetically pleasing for customers.

- Check the tank regularly to make sure no contamination can get into the tank.
- When was the last time your tank was cleaned or inspected? Storage tanks can be a haven for microorganisms if not kept clean and maintained.
- Storage tanks should be inspected annually and a regular cleaning schedule established based on those inspections.
- Visually check around the base or foundation of the tank to make sure no erosion has occurred that may result in a tank collapse and failure.
- Are there any signs of rust or serious corrosion?
- If you have to shut down the tank for repairs, can you shut valves (isolate) or does the whole system have to be shut down to repair the tank?
- Do you have access to some calcium hypochlorite or sodium hypochlorite to disinfect the tank after it is repaired?

6.9 Leak Detection

Leak detection inspection should be routinely conducted throughout the entire distribution system. The distribution system consists of the network of pipes, valves, fire hydrants, service lines, meters, and well house plumbing. Water can be lost from any of these components.
Small leaks never get smaller. Early detection and leak repair will help keep operating and maintenance costs down. Lost water equals lost revenue. Patrol the distribution system and observe for obvious leaks. Look for wet spots on the ground that may indicate a leak. Some systems pay a professional to perform an annual leak inspection the system.

Check and record the master flow meter readings on a daily basis. If customers have individual meters, residential water use can be compared to the master flow meter reading.

Also, water pooled around a leak in the pipe is an indirect cross-connection. Non-potable water may back siphon into the water pipe if a pressure drop caused by a leaking line or power failure occurs and creates a vacuum.

6.10 Cross-Connection

The greatest potential hazard in the piping or distribution system is associated with **cross-connections** to non-potable waters. It is the system owner's responsibility to ensure that their system is free of cross-connections. If you have any questions about potential cross-connection situations, a cross-connection control specialist should be consulted.

A cross-connection is defined as any direct or indirect connection between a public water supply and any other source of non-potable liquid. A direct connection is a physical connection between the piping arrangements of a potable and non-potable system. An indirect connection occurs when the water completes the connection, such as a hose from a potable supply submerged in contaminated water, or a leaking pipeline that pools water around the break.

Backflow

One of the greatest hazards that exists in a small water system can occur as a result of backflow from the customers premises into the distribution system. Backflow is defined as an undesired, reversed flow of liquid in a piping system. Backflow due to cross-connections, are serious plumbing problems that can cause sickness or death.

Backsiphonage

Backflow can be caused by backsiphonage (Figure 6.6), backpressure, or a combination of the two. Backsiphonage backflow results from pressure in the distribution system falling below atmospheric pressure (14.7 psi at sea level). Contaminated water from the customer's pipelines is sucked

into the distribution system because the supply pressure is less than atmospheric pressure.

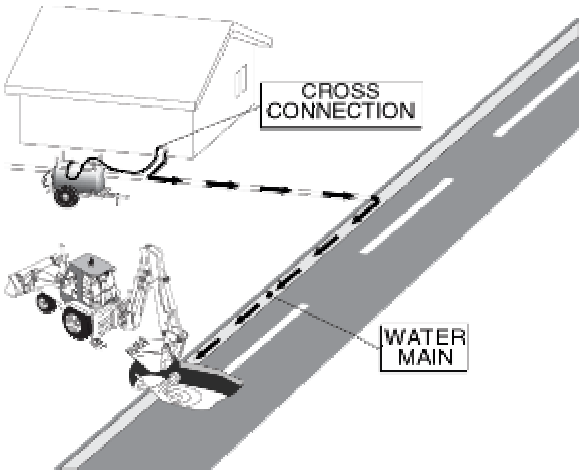

Figure 6.6: Backsiphonage Condition

Backpressure
Backflow due to backpressure happens when a customer's water pressure is greater than your water system's pressure. When this occurs, potentially contaminated water from the higher pressure in the customer's pipelines flows into the distribution system's pipelines.

The minimum pressure that should be maintained in the distribution system is 20 psi. At 20 psi a positive pressure is maintained in the distribution system, and the chance of backsiphonage is reduced.

Occurrence
Cross-connections can occur in a variety of locations, including the pump house, hospitals, farms, houses, and apartment complexes. The following are examples of cross-connections:

- A prevalent type of cross-connection is made when a hose is connected to a sink faucet with the other end of the hose lying in a pool or sink full of polluted or contaminated water. In this case backflow occurs by backsiphonage. If a partial vacuum is set up in the distribution system, water can be drawn from the sink by suction when the faucet is opened.
- Direct cross-connections to a pressurized system, such as a hot water boiler, are not uncommon. In this case backflow can occur by backpressure and by backsiphonage. Backpressure backflow can occur when the water pressure in the boiler or pressurized tank exceeds the positive pressure in the water distribution lines.
- A cross-connection to an elevated tank containing a non-potable substance can cause backflow by backpressure. Backflow can occur if the valve is left open and the pressure caused by the water elevation in the tank exceeds the line pressure.
- A cross-connection to a pressurized pipe carrying contaminated water can cause backflow. When the valve is opened, backflow by backpressure can occur if the pressure in the non-potable lines is higher than the positive pressure in the potable system.
- A cross-connection can be created when a hose connection from a water line is used to fill a tanker truck. Backflow can occur by backsiphonage if a partial vacuum is developed in the water system.
- A cross-connection can be created when a hose connection from a water line is used to operate a paint sprayer or a herbicide applicator.

6.11 Backflow Preventers

There are five basic devices or methods used to prevent or reduce the possibility of backflow in cross-connections. Each device must be installed properly and tested annually by a certified backflow device tester to ensure satisfactory performance. If you have any questions regarding the suitability of a particular device in a specific application, an experienced backflow device technician should be consulted.

1. Air Gap
An air gap (Figure 6.7) is a physical separation of the potable and non-potable water system by an air space. The air gap is the most reliable backflow prevention measure. The vertical distance between the supply pipe and the flood-level rim should be at least two times the diameter of the supply pipe, but never less than two inches. This type of backflow prevention technique can be used in situations in which potable water runs into a tank, sink, or any source that is under atmospheric pressure.

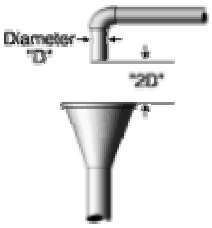

Figure 6.7: Air Gap

2. Atmospheric Vacuum Breaker (AVB)
Atmospheric vacuum breaker devices (Figure 6.8) do not prevent backflow due to backpressure, but they can control backsiphonage. They must be installed on the discharge side of the last control valve. In addition, they cannot be used under continuous pressure for a period of eight hours or more.

AVB's are usually used with hose bibs or spigots in situations in which a hose is attached to a sprinkler system or is draining into a tank.

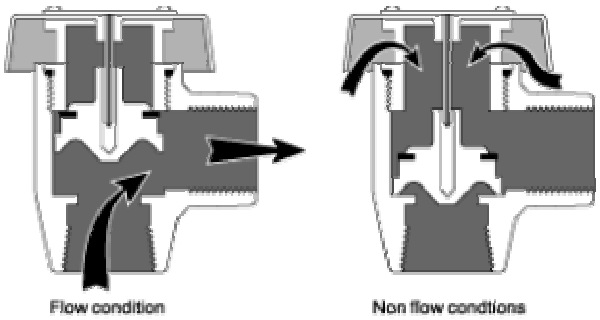

Figure 6.8: Atmospheric Vacuum Breaker

3. Pressure Vacuum Breaker Assembly (PVB)
Pressure vacuum breaker assemblies are similar to atmospheric vacuum breakers except that these devices can be used under continuous pressure. They cannot prevent backflow due to backpressure and must be installed above the usage point to prevent backsiphonage.

The PVB is spring loaded to allow air to enter the device. Under normal conditions, water pressure compresses the spring, closing the air opening with the plunger. If a partial vacuum in the assembly is obtained, air is allowed to enter the assembly, forming an air gap.

4. Double Check Valve Assembly
Double check valve assemblies (Figure 6.9) are used for a direct connection between two potable water systems. Under continuous pressure they cannot be used to connect a potable water supply to a contaminated or high-hazard water system. They offer only partial degree of protection because particles can prevent proper seating of the valves causing them to leak.

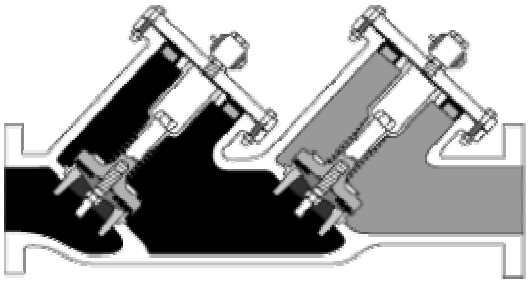

Figure 6.9: Double Check Valve

5. Reduced Pressure Principle Assembly (RPZ)
Of all these devices, the reduced pressure zone assembly (Figure 6.10) provides the greatest protection against backpressure and backsiphonage. The RPZ can be used under continuous pressure and in high-hazard conditions. The RPZ is designed so it will operate even if both check valves become fouled.

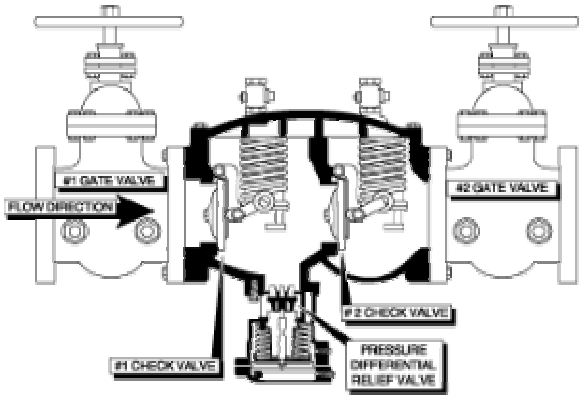

Figure 6.10: Reduced Pressure Zone Assembly

6.12 Cross-Connection Control Program

The main function of a cross-connection control program is to eliminate the possibility of cross-connections in the water system. Creating an effective cross-connection control program is an important and challenging responsibility.

Developing a program
Establishing a cross-connection control program for a small water system can be a daunting task. Small water systems in Alaska may be more susceptible to backflow and backpressure problems than larger water systems. As a water system owner or operator, the last thing you want is someone getting sick or possibly dying due to a cross-connection in your system.
To prevent this from happening, you need to survey your system for cross-connections. Every time a new connection is made to the potable water system, you must ask yourself if you are creating a cross-connection. If the answer is yes, the proper backflow device must be installed and maintained.

If you have backflow devices already installed in your system, you must make sure a qualified tester inspects them annually and records of the tests are retained.

Water system operators must be able to recognize cross-connections and take the appropriate actions to remove indirect cross-connections if possible or install approved backflow prevention devices on direct cross-connections.

6.13 Water System Security

Though the threat of contamination of drinking water through vandalism is remote, small water systems must be prepared. Take a few moments and decide how you would handle an unknown threat to your water source. If there are signs of unauthorized activity near your source or unauthorized entry to your plant, the threat should be taken seriously by water system owners, operators, and managers. Emergency response plans should be in place, or written immediately, and small water system personnel should review and have formal safety plans in place. It does not have to be elaborate, but a common sense plan should be developed.

If there are sign of unauthorized activity you should increase source water and water system facilities inspections. Look for any change that may have occurred at any of the facilities since the last visit: signs of unauthorized entry to the facilities, water tanks, or changes in water color, smell, or appearance. A water supply may appear clear, have no odors and taste fine, yet may have a high level of dissolved substances or microorganisms that are not visible to the naked eye. Since it is impossible to judge the quality of the water with the eye, it is critical to analyze the water for physical and chemical properties.

The location of your system and its vulnerability to vandalism will determine the level of surveillance and security needed. If you are located in a residential area or near a school, the incidence of vandalism will likely be higher than if you are in a secluded, remote location.

Do not take any changes for granted. Report unauthorized entry to facilities to the manager and owner. Notify the proper legal authorities immediately if you suspect illegal entry to any of your facilities. Surveillance, vigilance, and common sense will help protect your system from vandalism.

Chapter 7 - Troubleshooting

7.1 Introduction

During water system operations, various problems may develop that cause trouble. Finding the cause of the problem or trouble is called "troubleshooting." Troubleshooting involves a series of steps leading from an assessment of what you know about current conditions and what you know about the normal operation of the system through a systematic investigation of the status of the components involved to ideas about the possible causes and solutions.

Problems may be hydraulic, mechanical and/or electrical. Hydraulic problems may include a pump that will not deliver water at all, delivers an insufficient amount of water, or loses prime after start up. Mechanical problems may include excessive use of power to operate the pump, excessive vibration or noise, or bearings failure. Electrical problems may be interrupted power supply, burned out components, faulty wiring and grounds, or improperly designed and/or installed equipment.

Many problems are caused by a combination of mechanical, hydraulic, and electrical problem. For example, a well may pump sand or mud. When this occurs, the well screen may have collapsed or corroded, causing the screen's slot openings to become enlarged allowing debris, sand, and mud to enter. If the well screen is not the problem, the pumping rate should be checked. The pumping rate may be too high. Excessive sand may require the installation of a sand trap. Or there may be an electrical problem, such as a faulty switch or starter.

Seventy-five percent of pump and control problems are reported to be electrical. Therefore, an owner/operator will likely encounter an electrical problem at some point.

Operators should have a good working knowledge of electrical circuits and circuit-testing instruments before attempting to service or troubleshoot the electrical circuits and components commonly used in well pump operations.

Small water systems operators unfamiliar with well pump or electrical circuit troubleshooting should arrange with a local, licensed electrical firm or pump service company to perform this service.

The following basic electrical information will help an operator prepare for the certification exam and provide an understanding of electrical fundamentals.

NOTE: Electricity is dangerous and can kill you. This information covers electrical theory in very basic terms and does not attempt to prepare an owner/operator for troubleshooting electrical problems, electrical circuits, or wiring water system instrumentation nor machinery.

An owner/operator should not attempt servicing or troubleshooting water

system electrical components unless he/she has received appropriate training and is appropriately licensed to install and/or maintain electrical equipment.

7.2 Basic Electricity

Electricity is the flow of invisible particles called electrons, through a **conductor**. That flow is controlled in an electric circuit. The knowledge that electricity is created by the flow of electrons, and the knowledge of how to capture electrons, makes electricity a convenient and convertible form of energy.

Electrons flow better in some things than in others. Conductors are substances in which electrons flow freely. Metals are excellent conductors. Water is a fair conductor. Since the human body is mostly water, it can conduct electricity fairly well, too. This is why it is important to be very careful when working around electricity.

Insulators are substances in which electrons cannot flow freely. Glass, plastic, and rubber are good insulators. Electrical wiring is always enclosed in a protective covering of plastic or rubber that serve as insulators.

In order to make electrons do useful work, the electrons must have a source of pressure to push on them and cause them to move. Also, the electrons must have a complete path or **circuit** to follow. The basic components of an electric circuit (Figure 7.1) include the following:

Source
The part that provides the electric force or pressure to move the electrons; such as a battery or generator

Load
The part that does the work or uses the electricity; such as light bulb, heater, or motor

Conductor
The part that carries the electricity around the circuit such as wire, cable, or power line

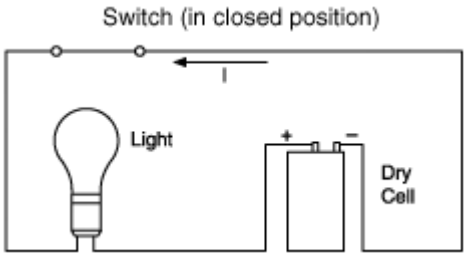

Figure 7.1: Simple Circuit

The battery pushes electrons through the metal wire, through the light bulb and back to the other terminal of the battery, completing the circuit.

7.2a Current Flow: Amperes

Current is the flow of electrons. To understand current, imagine an electric circuit as a chain. When all three components (source, load, conductor)

exist in the circuit, the electrical force causes the electrons to move down the chain.

This forced movement of electrons is called current and is measured in **amperes**. Current is measured with a test instrument called an **ammeter**. Two types of current flow are:

1. **Direct Current (DC)**
   The electrons flow in one direction.
2. **Alternating Current (AC)**
   The electrons flow back-and-forth

The AC you use at home changes direction 60 times per second. This means the electrons moves back-and-forth 60 times per second. This flow in one direction, reversing, and flowing in the other direction is called a **cycle**. The term 60 cycles AC or 60 Hertz means 60 of these cycles occur each second.

7.2b Electrical Pressure: Volts

Electrical pressure is the force that causes electrons to move in a closed electric circuit. It is also referred to as **voltage**. The pressure or force is measured in **volts** by a test instrument called a **voltmeter**. In a DC circuit, a battery produces voltage and in AC circuit a generator produces voltage.

A car battery is typically 12 volts. That means that the difference in electron pressure between the two terminals is 12 volts. The electric outlets in your well house are 120 volts or 240 volts. The voltage difference between the two prongs of the outlet is 120 V or 240 V.

7.2c Resistance: Ohms

Electrons do not flow freely in a conductor. There is a certain amount of **resistance** or friction to oppose the electron flow. This resistance is called **ohms** and is measured by a test instrument called an **ohmmeter**.

Factors that determine amount of resistance are:

- **Type of material**
  A conductor has low resistance permitting the flow of electrons - copper, aluminum. An insulator has high resistance restricting the flow of electrons - rubber, glass.
- **Size** (diameter)
  Large diameter, less resistance
  Small diameter, higher resistance
- **Length**
  Longer the length, more resistance
- **Temperature**
  Higher temperature, more resistance

If something has a high resistance, it takes a lot of voltage (pressure) to get the current to flow.

7.2d Water Flow Analogy of Electrical Circuit

The flow of electrons in an electric circuit can be compared to the flow of water through a closed loop piping system. Volts, amps, and watts measure electricity. Volts measure the pressure under which electricity flows. Amps measure the amount of electric current. Watts measure the amount of work done by a certain amount of current at a certain pressure or voltage.

To simplify the relationship, think of water in a hose. Turning on the faucet supplies the force, which is like the voltage. The amount of water flowing (gallons per minute) through the hose is like the amperage. You would use a lot of water that comes out fast (more watts) to wash off a muddy car. You would use less water that comes out more slowly (less watts) to fill a glass.

Water circuit vs. Electric circuit

Source

- Water circuit - water pump produces water pressures (psi) to cause water to flow (gpm)
- Electric circuit - generator produces electrical force (volts) to cause electrons to flow (amps)

Flow measurement

- Water circuit - flow meter measures water flow in gpm
- Electric circuit - ammeter measures current in amperes (amps)

Load

- Water circuit - water wheel does work by rotating
- Electric circuit - light bulb does work by producing light and heat

Pressure loss

- To determine the loss of energy, pressure gauges installed before and after the water wheel can measure the loss of water pressure.
- A voltmeter measures voltage drop as the current goes through the light bulb (conversion of electrical energy to light and heat energy).

Conductor

- Water circuit - pipe that carries the flow of water
- Electric circuit - wire that carries the electrons

7.2e Ohms Law

You have learned that the flow of electrons (current) is measured in amperes or amps. Also, electrical pressure, measured in volts, is required to cause current to flow. In addition, there is always resistance to this flow and the unit of resistance is the ohm.

The relationship between these electrical terms can be expressed very simply as Ohm's Law. It is one of the basic laws of electricity and can be expressed by the following equation:

$$\text{Amps} = \frac{\text{Volts}}{\text{Ohms}} \qquad \text{Ohms} = \frac{\text{Volts}}{\text{Amps}} \qquad \text{Volts} = \text{Amps X Ohms}$$

or,

7.3 Electric Power

When a charge moves in a circuit, the rate at which work is done is called electric power. Electric power is equal to the product of current and voltage:

Power = Voltage x Current

You must have voltage and current to generate power. Power is the rate at which electrical work is done, measured in **Watts (W)**.

Watts (Power) = Volts x Amperes

A more powerful pump motor can pump water faster than a less powerful one. Many electrical devices (heater, light bulbs, etc.) are rated in watts, but electric motors used to drive pumps are usually rated in **horsepower (hp)**.

Although theoretically one horsepower equals 746 watts, this does not include the loss of energy in the motor through heat and friction. Consequently, for practical purposes, if a motor is ½ hp or larger each hp is equivalent to approximately 1000 watts. For motors smaller than ½ hp, use 1200 watts per hp. A 5-hp motor will use about 5,000 watts at full load and a ¼ hp motor will use about 300 watts at full load. However, watts and horsepower do not tell you how much electrical energy a piece of equipment is using. Remember, since power is a rate, you need to include the time that the equipment is running. The unit most commonly used to measure power is the **kilowatt-hour (Kw-h)**.

If we can figure out how much energy an electrical device uses and we know how long the equipment is in operation each day, we should be able to figure out how much it costs to operate that device. For instance, let us calculate the cost of running a 1-½ hp pump for 10 hours a day if electricity costs 15 cents per kilowatt-hour:

1. Since a horsepower is roughly equivalent to 1000 watts for this size pump, the power consumed by the pump would be 1,500 watts or 1.5 kilowatts;
2. Next find the energy consumed:
   Energy = Power x Time
   = 1.5 Kw x 10 hours
   = 15 Kw-hours
3. Next find cost:
   Cost = 15 Kw-hours x $0.15/Kw-hour
   = $2.25

The cost is about $2.25 to run this pump for 10 hours a day.

An extended power outage may shut off the pump, as well as other electricity needed to run the water system. To prevent this problem, some small water systems purchase an emergency generator to keep the pump operating and maintain minimal electrical service

to the system. The generator should be powerful enough to operate the pump. Also, because of the electrical hazard, a qualified electrician should make the installation.

NOTE: Never attempt to service, troubleshoot, or repair a motor without disconnecting the motor breaker from the main power source and using logout/tagout devices. Many motors also use **capacitors** that maintain an electrical charge until they are properly discharged!! Do not attempt to service electrical equipment without appropriate training and licensing.

7.4 Troubleshooting Guide

This trouble-shooting guide is not intended to be all-inclusive, but rather a starting point for recognizing and identifying well problems. A list of well problems, probable causes, and possible solutions are listed in Table G. Also refer to Appendix 5, Troubleshooting Guide for Submersible Pumps.

Troubleshooting Guide

Symptom	Probable Cause	Corrective Action
Pump Will Not Start	Circuit breaker or overload relay tripped, motor cold	Reset breaker or reset manual overload relay.
	Fuses burned out	Check for cause and correct, replace fuses.
	No power to switch box	Confirm with voltmeter by checking incoming power source, notify power company.
	Motor is hot and overload relay has tripped	Allow motor to cool. Check supply voltage. If low, notify power company. If normal, reset overload relay, start motor, check amperage; if above normal, call electrician.
	Loose or broken wire, or short	Tighten wiring terminal, replace any broken wires, check for shorts and correct.
	Low line voltage	Check incoming power, use voltmeter; if low, notify power company.
	Defective motor	*MEG* out motor; if bad, replace.
	Defective pressure switch	With contact points closed, check for voltage through switch; if no voltage, replace switch; if low voltage, clean contact points; if full voltage, proceed to next item.
	Line to pressure switch is plugged or valve in line has accidentally been shut off	Open valve if closed. Clean or replace line.
	Pump control valve malfunctioning	Check limit switch for proper travel and contact. Adjust or replace as required.
	Defective time delay relay or pump start timer	Check for voltage through relay or timer – replace as necessary – check for loose linkage.
	Float switch or transducer malfunctioning	If pump is activated by float switch or pressure transducer on storage tank, check for incoming signal; if no signal, check out switch or transducer with voltmeter. If okay, look for broken cable between storage tank and pump station.
Pump Will Not Shut Off	Defective pressure switch	Points in switch stuck or mechanical linkage broken, replace switch.
	Line to pressure switch is plugged or valve in line has been accidentally shut off	Open valve if closed. Clean or replace plugged line.
	Cutoff pressure setting too high	Adjust setting.
	Pump control valve malfunctioning	Check limit switch for proper travel and contact. Adjust or replace as required.
	Float switch or transducer malfunctioning	Defective incoming signal, check and replace components as required. Check cable.
	Defective timer in pump stop mode	Check for voltage through pump stop timer, replace if defective.
Pump Starts Too Frequently	Pressure switch cut-in and cutoff settings too close	Adjust settings, maintain minimum 20 psi (138 kPa or 1.4 kg/sq cm) differential.
	Waterlogged tank	Add air to tank. Check air charging system and air release valve. Also check tank and connections for air leaks.
	Leaking foot valve	Check for backflow into well; if excessive or if pump shaft is turning backward, correct problem as soon as possible.
	Time delay relay or pump start/stop timers are malfunctioning	Check relay or timers for proper operation, replace defective components.

MEG: A procedure used for checking the insulation resistance on motors, feeders, bus bar systems, grounds, and branch circuit wiring

Symptom	Probable Cause	Corrective Action
Fuses Blow, Circuit Breaker or Overload Relays Trip When Pump is in Operation	Switch box or control not properly vented, or in full sunshine or dead air location, overload relay may be tripping due to external heat	Provide adequate ventilation (may require small fan). Provide shelter from sun. Paint box or panel with heat reflective paint, preferably white.
	Incorrect voltage	Check incoming power source. If not within prescribed limits, notify power company.
	Overload relays tripped	Check motor running amperage; verify that thermal relay components are correctly sized to operating conditions. Repeated tripping will weaken units, replace if necessary.
	Motor overloaded and running very hot	Modern motors are designed to run hot and if the hand can be held on the motor for 10 seconds without extreme discomfort, the temperature is not damaging. Motor current should not exceed *NAMEPLATE* rating. Fifteen percent overload reduces motor life by 50 percent.
Pump Will Not Deliver Normal Amount of Water	Pump breaking suction	Check water level to be certain water is above pump bowls when operating. If not, lower bowls.
	Pump impeller improperly adjusted	Check adjustment and lower impellers (qualified personnel only).
	Rotation incorrect	Check rotation.
	Impellers worn	If well pumps sand, impeller could be excessively worn thus reducing amount of water pump can deliver. Evaluate and recondition pump bowls if required.
	Pump control valve malfunctioning	Check limit switch for proper travel and contact. Adjust or replace as required.
	Impeller or bowls partially plugged	Wash down pump by forcing water back through discharge pipe. Evaluate sand production from well.
	Drawdown more than anticipated	Check pumping water level. Reduce production from pump or lower bowls.
	Pump motor speed too slow	Check speed and compare with performance curves. Also check lift and discharge pressure for power requirements.
Pump Takes Too Much Power	Impellers not properly adjusted	Refer to manufacturer's bulletin for adjustment of open or closed impellers.
	Well is pumping sand	Check water being pumped for presence of sand. Restrict discharge until water is clean. Care should be taken not to shut down pump if it is pumping very much sand.
	Crooked well, pump shaft binding	Reshim between pump base and pump head to center shaft in motor quill. Never shim between pump head and motor.
	Worn bearing or bent shaft	Check and replace as necessary.
Excessive Operating Noise	Motor bearing worn	Replace as necessary.
	Bent line shaft or head shaft	Check and replace.
	Line shaft bearings not receiving oil	Make sure there is oil in the oil reservoir and the oiler solenoid is opening. Check sight gage drip rate, adjust drip feed oiler for 5 drops per minute plus 1 drop per minute for each 40 feet (12 m) of column.

NAMEPLATE: A durable metal plate found on equipment which lists critical installation and operating conditions for the equipment.

This table is copyrighted material reproduced with the permission of the Office of Water Programs, California State University, Sacramento, from Small Water System Operation and Maintenance 4th Edition. For additional information on this operator training manual and other similar manuals contact the office of Water Programs, (916) 278-6142.

Table G: Troubleshooting Guide

7.5 Emergency Well Disinfection

Disease-causing organisms can enter wells, tanks and distribution piping during the construction process, or during maintenance or repair. Special care must be taken to prevent contaminated soils or water from getting into the water source or distribution system resulting in a positive **BacT** sample.

Poorly constructed wells may also allow contaminated ground water or surface water runoff to enter the well. The State of Alaska Drinking Water Regulations require that before use, a newly constructed or reworked well must be flushed of sediment and disinfected as specified in ANSI/AWWA Standard A100-97. A copy of the ANSI/AWWA Standard may be obtained from ADEC, ATTAC or AWWA.

Water supply wells must be disinfected and sampled after their initial construction to assure that the water produced is safe for human consumption. Additionally, wells should be disinfected and sampled after repairs are made to the well or well equipment.

Whenever periodic or emergency disinfection is required, only chlorine products approved by the National Sanitation Foundation (NSF) or AWWA for use in potable water should be used. When system disinfection is performed with non-NSF approved products, such as household bleach, it is critical to flush all chlorine from the system prior to human consumption.

High-test hypochlorite (HTH), or calcium hypochlorite, is used to disinfect swimming pools and is readily found at hardware stores and outlets for swimming pool equipment. HTH is NSF approved at a maximum dosage of only 4.0 mg/L. Since it is used at a much higher dosage for disinfection, it must be thoroughly flushed from the system prior to human consumption.

When working with chlorine, the operator must be in a well-ventilated place. The powder or strong liquid should not come in contact with skin or clothing. Chlorine solutions are best handled in plastic or glass containers because metals are corroded by strong chlorine solutions.

7.6 Disinfection Procedure for Shock Chlorinating Systems

If bacteriological tests (BacT) indicate that bacterial contamination is occurring, shock chlorination is the most widely used method for initial treatment. Shock chlorination is a one-time introduction of a strong chlorine solution into the entire water system; well, pump, distribution pipeline. Groundwater systems may need to shock chlorinate the well:

- if lab results indicate the presence of bacteria.
- upon completion of a new well or after pump replacement or repair.
- if the piping system is opened for repairs or maintenance.
- to control iron and sulfur bacteria.

Appendix 6 shows the required amount of liquid household bleach or calcium hypochlorite to be added to five or ten gallons of water to achieve the proper chlorine concentration in the well (approximately 100 mg/L).

The procedure involves calculating the volume of water standing in the well and then applying enough chlorine powder, tablets or liquid to achieve a 100 mg/L chlorine concentration (50 mg/L for new wells). The chlorine is mixed with five to ten gallons of water then poured down the well.

As a rule of thumb, wells of six inches in diameter require 0.5 ounces of sodium hypochlorite (household bleach) or 0.033 ounces of calcium hypochlorite per foot of water for disinfection.

Remember that chlorine is very volatile and is dangerous to work with in confined areas. Make sure the work area is well ventilated. Chlorine products must be handled in accordance with the manufacturer's directions. Failure to follow instructions could cause injury. Wear eye protection, gloves, and clothes that cover the body for protection.

Before you begin the shock chlorination process, run some fresh water into a five-gallon container. If concentrated chlorine accidentally comes into contact with your eyes or skin, use this fresh water to flush for ten to fifteen minutes. If you get some of the chlorine solution in your eyes, see your doctor after thoroughly flushing the affected eye.

Once the chlorine solution has been added to the well, a hose is then connected to the discharge side of the pump with the outlet of the hose pointed back down into the well casing or access pipe. The well pump is started so that water from the well is circulated back down into the casing. Circulation should continue until a strong chlorine odor is detected coming from the hose. A chlorine colorimetric comparator may also be used to measure chlorine residual.

Another method of shock chlorinating a large diameter well is to place calcium hypochlorite tablets or powder in a weighted porous sack (tightly woven burlap works well). Raise and lower the sack in the well water. Remember that only the portions of the well coming in contact with the chlorine will be disinfected. Be sure to allow the sack to touch the bottom of the well during the process.

For small diameter wells (4-6 inch diameter) there is not enough room in the well casing to use a sack. Instead, dissolve the tablets or powder in a bucket of water and introduce into the well casing as described for using liquid a chlorine solution. Again, use a nearby hydrant and hose to circulate water through a portion of the distribution system to assure that the chlorine material is thoroughly mixed with well water.

Regardless of how you introduce the chlorine material into your well, start and stop the pump several times to ensure that the chlorine is thoroughly mixed with well water. Recirculate the water until a strong chlorine smell has been noted for at least five minutes. The following list summarizes the steps used to shock chlorinate a well and distribution system.

1. Calculate the depth of water in the well by subtracting the non-pumping (static) water level in the well from the well depth. Then calculate the volume of water in the well.
2. A solution of approximately 100 mg/L chlorine is recommended for disinfection of wells containing coliform or non-coliform bacteria. Using Appendix 6 determine the amount of bleach or calcium hypochlorite needed to disinfect the well. Be sure the bucket is plastic and thoroughly washed. Mix this calculated dosage with five to ten gallons of water.
3. Remove the well cap. Carefully pour the chlorine solution down the well. Try to splash the solution on the sidewalls of the well casing as much as possible. Replace the cap securely. Attach a hose to a water hydrant or faucet near the well and start the well pump. Circulate the well water through the hydrant and back into the well. This will thoroughly mix the chlorine solution and well water until the chlorine odor is present.
4. Turn on each service tap and allow the water to run until the chlorine odor is present at each tap. Shut the tap off. Do this at each tap if possible. *Customers must not be allowed to drink the chlorinated water*.
5. Leave the chlorine in the well and system at least twelve to twenty-four hours to allow contact time with the bacteria. Do not use the water during this time. Never drink well water containing high levels of chlorine.
6. After 12 - 24 hours, pump the chlorinated water out of the system until its odor is no longer detected, or the residual measures 0.5 mg/L or below with the color comparator. Water with a chlorine residual above 1 mg/L should not be discharged to any lake, stream or other surface water body because chlorine is extremely toxic to fish and other aquatic life. Complete removal of the chlorinated water may take several hours depending on the capacity of the pump. Flush all taps inside the buildings. Drain as much water from the system as possible. Hydropneumatic tanks containing a bladder, the rubber air-water separator inside the tank, could be damaged by the chlorine solution. Check manufacturers recommendations to determine if the pressure tank should be bypassed. For pressure tanks without bladders, release the air so that the tank can be filled with chlorinated water. Drain water from the water heaters so that chlorinated water can be circulated through the hot water pipelines.
7. Backwash and clean water softeners, sand filters and iron removal filters with a strong chlorine solution. *Do not* chlorinate activated carbon filters since these filters will remove the chlorine until they become overloaded. Activated carbon filters should be removed from the distribution system until after chlorine has been flushed from the system.
8. Wait 72 hours and then collect a water sample to test for coliform bacteria. The sample should be taken to determine if the disinfection process was effective and should be labeled a special sample when submitted to the laboratory. It will not be used for compliance purposes.

7.7 Well Disinfection Evaluation

Try to determine the cause of the positive BacT samples if you had to shock chlorinate to correct the problem. If the repeat samples are satisfactory after disinfection, attempt to determine if the contamination was due to operator error or caused by a bacteriological growth in the distribution system due to a distribution repair or plumbing change. If so, disinfecting probably corrected the problem.

If the contamination was caused by a persistent source of contamination, disinfection treatment can appear to correct the problem by temporarily killing off bacteria but the problem can and probably will reoccur.

If the contamination is from a major source, with a high bacteria count, repeated disinfection and testing of the well may yield inconsistent results, sometimes satisfactory results, and sometimes not. If shock disinfection due to positive samples is necessary more than twice per year, serious well contamination or distribution system problems may be indicated.

If repeat samples are unsatisfactory after disinfecting, it is likely there is a persistent source of contamination. Common sources of contamination include a loose or damaged sanitary seal, a loose or damaged pitless adapter (where the buried water line enters the well casing), a bad plumbing connection in piping between the well and the building, a cross-connection, spiders living in the wellhead, or a dead animal in the well. Rodents can gain entry into a well that was not properly capped or has a damaged well casing.

Bacteria can be filtered out of water that passes through several feet of soil. Therefore, BacT results may start to be intermittently satisfactory then unsatisfactory. A detergent test may determine if the well is being influenced by a septic system. Any water that reaches a well from a septic system will have detergent present. Have the lab run a detergent test if a septic system is suspected as the source of contamination.

Correcting the source of contamination is naturally preferred, but installing continuous disinfecting equipment such as a chlorinator or ultraviolet light system may be required to protect the health of water system customers. The disinfecting equipment will depend on the type of chemical to be used.

In addition to required tests, well water should be tested immediately if there is any change in its clarity, color, odor or taste, or if there has been a change in the surrounding land use. Through regular assessment and testing of drinking water, the microbial and chemical safety of well water can be verified so that it will be both safe to drink and aesthetically pleasing.

Chapter 8 – Public Water Supply Regulations & Monitoring

8.1 Introduction

People have different water quality concerns, depending on the use for which the water is intended. Farmers are interested in the effects irrigation waters have on the chemical and physical properties of soils. Fisheries biologists are concerned about turbidity dissolved oxygen and contaminants that are toxic to fish. We, as water suppliers, are mainly concerned with protecting the health of our customers. However, we must also be concerned with the taste and appearance of the water and such things as providing a water that does not stain clothes and fixtures, does not consume large amounts of soaps and detergents, and does not destroy the customers piping or appliances.

Most harmful contaminants cannot be seen, smelled or tasted. Pathogenic microorganisms can only be observed with a microscope. Lead, arsenic, cyanide and other harmful inorganic chemicals can be dissolved in water without making the water look or taste unsatisfactory. Even fuel or oil contamination cannot be detected at low levels. The only way to detect the presence of harmful contaminants is to routinely sample and test the water.

The State and federal governments establish sampling and monitoring requirements for public water supply systems to protect the health of the public. Standards, establishing safe levels for various contaminants, must be set and public water systems are required to monitor their water for compliance with these standards at a frequency established by the regulatory agency.

At the federal level, the SDWA sets minimum standards to be met by all public water systems. Alaska, and most other states, has established through primacy its own drinking water regulations using federal regulations as guidelines.

8.2 Safe Drinking Water Act (SDWA)

The law regulating all public water systems in the United States is the SDWA. The act authorized the USEPA to establish a cooperative program among local, state, and federal agencies for regulation of drinking water. Under the SDWA, the primary role of the federal government was to develop national drinking water regulations that protect public health and welfare.

The states could request the responsibility of implementing the regulations and monitoring the performance of public water systems. The term primacy is used to describe this process. ADEC obtained primacy in 1978 and has administered and enforced the State Drinking Water Regulations since then. To maintain primacy, Alaska was required to adopt

regulations no less stringent than federal requirements. Public water systems themselves are responsible for testing their drinking water to ensure that it meets the standards established by the regulations.

A **Public Water System** is a system that delivers to the public piped water for human consumption. To be defined as a public water system the system must have at least 15 service connections or regularly serve at least 25 individuals daily at least 60 days out of the year.

In Alaska, public water systems are divided into three classes; Class A, B and C.

A **Class A System** is a public water system that is expected to serve year-round, at least 25 individuals, 15 residential service connections, or that regularly serve the same 25 or more persons for at least six months of the year. Class A systems serve cities, villages, schools, apartment buildings, and mobile home parks.

A **Class B System** is a public water system that is expected to serve, in the normal course of events, at least 25 persons each day or 10 service connections for at least 60 days of the year, and is not a Class A system. Class B systems would include lodges and restaurants.

A **Class C System** is neither Class A or Class B, but still qualifies as a public water system. A Class C system might serve a duplex.

For purposes of contaminant monitoring, the distinction between Class A and Class B systems is important. The important distinction is that Class A system serve a residential population and Class B systems serve a transient population. For example, a campground, which would be a Class B system, may serve hundreds of people daily, but they are probably different people each day so no one individual drinks the campground's water on a regular basis. Since certain contaminants have adverse health effects only when consumed regularly, over a long period, the distinction between Class A (residential) and Class B (transient) systems is important in determining which contaminants must be monitored and the frequency.

The SDWA have been amended several times over the years, significantly increasing the number of contaminants for which public water supply systems must monitor from 18 in 1975 to over 80 in 1996. The most recent, 1996 SDWA amendments, also added the certified operator requirements.

8.3 Health Effects of Drinking Water Contaminants

Contaminants in drinking water may cause either **acute** or **chronic** health effects. An acute effect usually follows ingestion of a pathogenic microorganism or a large dose of a chemical and occurs almost immediately. Examples of acute health effects are nausea, diarrhea, skin rash, vomiting, dizziness, and, in extreme cases, death.

Although pathogenic microorganisms can cause an acute health effect, the levels of chemicals commonly found in drinking water, are seldom high enough to cause acute health effects. With the exception of nitrate, chemicals are more likely to cause chronic health effects. Chronic health effects occur after exposure to small amounts of a chemical over a long period of time. Examples of chronic health effects include cancer, birth defects, organ damage, disorders of the nervous system, and damage to the immune system. Lead and trihalomethanes are examples of contaminants that can cause chronic health effects.

The possible health effects of a contaminant in drinking water differ widely, depending on the nature of the contaminant and whether a person consumes the water over a long period, briefly, or intermittently. Thus, allowable levels and monitoring requirements for systems serving residential populations (Class A systems) may be more stringent than those for systems serving transient or intermittent users (Class B systems).

8.4 Drinking Water Standards

There are two types of standards: primary and secondary. **Primary standards** are health based and are enforceable. **Secondary standards** are set more for aesthetic reasons (how the water looks and tastes), but can also have public health consequences at elevated levels. Secondary standards can be enforceable if significant levels are present.

8.4a Primary Standards

Primary standards are designed to protect public health by setting maximum permissible levels of potentially harmful substances in the drinking water. Primary standards may be either **Maximum Contaminant Levels (MCLs)** or **Treatment Technique Requirements (TTRs)**. The MCL is the number against which the water samples from your system are judged for compliance with the regulations.

MCLs for potentially toxic or harmful substances reflect levels that can be safely consumed in water, taking into account exposure to the substance from other sources. The MCLs are based on the consumption of approximately 2 quarts of water every day for a 70-year lifetime. The State of Alaska must establish MCLs that are at least as stringent as those set by the USEPA.

Setting drinking water standards is an imperfect process, rarely based on conclusive human evidence. Data relating human health effects to chemicals in drinking water are limited. It is important to understand that primary standards or MCLs for drinking water contaminants do not guarantee that water with a contaminant level below the standard is risk-free; nor do they mean

that water with a higher level is unsafe.

The process of setting primary standards (MCLs) for drinking water contaminants is based on three criteria:

- the contaminant causes adverse health effects;
- instruments are available to detect it in drinking water; and
- it is known to occur in drinking water.

The primary contaminant monitoring requirements vary depending upon the raw water source (groundwater, surface water or GWUDISW) and the system classification (Class A or Class B). Monitoring requirements are listed in Appendix 7. With the exception of nitrate and microorganisms, water that exceeds the MCL for inorganic and organic chemicals and radionuclides poses no immediate or acute risk to consumers. The substances are monitored for and controlled because drinking water that exceeds the standards for long periods of time may be harmful to consumers.

Where the USEPA is unable to establish an MCL, it must establish a Treatment Techniques Requirement (TTR) in lieu of an MCL. Public water systems (PWS) must comply with these treatment requirements. Currently, there are surface water filtration and corrosion control requirements in lieu of MCLs for several microorganisms and lead and copper, respectively.

An MCL may be expressed in milligrams per liter (mg/L) or micrograms per liter (µg/L), which is the same for the purposes of water quality analysis as parts per million (ppm) and parts per billion (ppb), respectively.

8.4b Secondary Standards

Secondary standards and the SMCLs apply to the aesthetic qualities of the water, such as taste, odor, or color. Water with contaminant levels above the SMCL may not be pleasant to drink but will generally not cause health problems. Yet, secondary standards can be important from a customer acceptability standpoint. Perfectly safe drinking water may be rejected based upon how it looks, tastes, or smells.

8.5 Public Water System Monitoring

Since the majority of harmful contaminants cannot be seen, smelled or tasted, you are required to monitor the water system, by sampling and testing the water at routine intervals. Most analyses must be performed by a state certified lab (refer to Appendix 1), although some routine tests, such as chlorine residual, can be performed on-site by the system operator. Reports documenting this monitoring must be sent to the ADEC Drinking Water Program.

Alaska's Drinking Water Regulations establish rules for all Public Water Systems in Alaska. Monitoring requirements, MCLs, public notice requirements, and plan review for all public water systems, large and small, are described in the State's Drinking Water Regulations. Monitoring by public water systems is on a nine-year compliance cycle. The types and frequency of required monitoring depends on the classification of your system and the source of raw water used. System owners/operators are encouraged to obtain the most recent version of the State Drinking Water Regulations from their local ADEC office.

Under certain circumstances the ADEC may grant to a public water system a variance from a requirement or an exemption from an MCL or treatment technique requirement. Variances and/or exemptions (sometimes referred to as waivers) may be grant, upon application to ADEC, for circumstances that are unique or where compliance is technically or economically impossible. Variances and exemptions will not be grant if ADEC determines that doing so would jeopardize consumer health. System owners/operators should consult with ADEC Drinking Water Program representatives for advice and assistance.

8.6 Inorganic Contaminants

When ingested with drinking water several inorganic substances, particularly heavy metals, can be detrimental to human health. Some of these inorganic substances have been shown to damage the brain, lungs, kidneys, heart, and intestines of mammals. Sources of inorganic contaminants include natural mineral deposits, runoff from mining operations, and industrial waste discharge.

Monitoring for most of the regulated inorganic contaminants is required every three years. However, nitrate, nitrite, lead, copper and asbestos monitoring are exceptions. For these contaminants the monitoring frequency may be reduced or increased depending on contaminant levels. A limited number of inorganic substances are discussed in this section. For a complete list of inorganic substances and monitoring requirements refer to Appendix 7 or contact your local ADEC office.

Nitrate

Nitrates are inorganic chemicals found in both surface and groundwater. They originate from many sources including animal and human wastes, soil, fertilizers and crop residues. Nitrates enter the water either by direct runoff or by percolation through the soil. Therefore, elevated levels of nitrates could indicate either a point or non-point pollution source.

Nitrate must be monitored annually (one sample per year) for both surface water and groundwater sources. The MCL is 10 mg/L. If the nitrate level exceeds 5.0 mg/L, quarterly testing is required.

Nitrate is considered an acute contaminant. Nitrate levels above the MCL of 10 mg/L pose an immediate

threat to children less than six months of age because their digestive systems are more likely to convert nitrates to nitrite. The nitrite is absorbed into the blood stream and prevents the blood from carrying oxygen. This condition is called methemoglobinemia or "blue baby" syndrome and can be fatal.

Nitrite

The health effect of nitrite is explained in the paragraph above. The MCL for nitrite is 1.0 mg/L. If the result of the nitrite sample is below 0.5 mg/L only one sample is required. If the nitrite result is greater than 0.5 mg/L, the water system must monitor quarterly until the results are reliably and consistently less than the nitrite MCL. Monitoring requirements are the same for surface water and groundwater sources. Surface water systems that chlorinate on a continuous basis are not required to sample for nitrite. The combination of nitrate and nitrite levels cannot exceed 10 mg/L.

Lead & Copper

Lead and copper are inorganic contaminants that have very specific sampling and monitoring requirements. A small number of natural waters contain significant levels of lead or copper. Most incidences of lead and copper contamination are a result of the corrosion of pipe and fixtures containing lead and copper or alloys such as bronze. Consequently, lead and copper samples are taken at the customer's tap.

Lead can interfere with normal body functions. It can change the way the blood-forming cells work, alter the way nerve cells signal each other, and can disturb or destroy thought processes. Lead exposure is of special concern for children because their bodies are still developing. Their future health and well-being is at risk if they are exposed to lead. The use of lead pipe and lead solder for installation or repair of public water system piping is no longer allowed.

The Lead and Copper Rule (LCR) specifies sampling procedures, actions to be taken if an **action level** is exceeded and acceptable treatment techniques that may be used to correct distribution system corrosion problems.

Treatment techniques, rather than finished water contaminant levels, have been established for lead and copper because the corrosion, which results in high levels of lead and copper, occurs in the piping system. Whereas most inorganic samples are taken before the water enters the distribution system, samples for lead and copper analysis are taken directly from consumer's taps.

The "action level" for lead is 0.015 mg/L, and for copper it is 1.3 mg/L. Systems that do not meet the "action level" at the tap are required to install corrosion control treatment to reduce the levels of lead and copper. The LCR requires "first draw samples" be taken from customer's taps. "First draw samples" are samples taken after the water has stood in the house piping at least 6 hours. A "first draw sample" assures that the sample of water that has been exposed to the maximum potential corrosive action in the consumer's piping. If the "first draw sample" sample is below action levels, it is safe to assume that water spending less time in contact with the piping system is also below the action level.

The population served by the system determines the number of samples required. The lead and copper results determine what, if any, further action is required.

Lead and copper monitoring is required for all Class A water systems for two initial (consecutive) six-month monitoring periods. If the results of the two monitoring periods are below the "action level," the water system may reduce the number of samples collected and perform the monitoring annually. After three consecutive years of monitoring with results below the action levels, monitoring may be reduced (with ADEC approval) to a three-year cycle.

Asbestos

Asbestos is a naturally occurring mineral more prevalent is surface water than groundwater. It is also a component of asbestos-cement pipe. Because there is a risk of developing stomach cancer from ingesting water that contains asbestos, an MCL of 7 million fibers per liter has been established.

Asbestos monitoring is required once during the first three years after the system begins to provide potable water, after which a waiver may be obtained allowing monitoring every nine years.

Arsenic

Arsenic is an element that occurs naturally in rocks and soil, water, air, plants and animals. The erosion of rocks and minerals, volcanic activity and forest fires are natural events that can release arsenic into the environment. Arsenic in drinking water causes bladder, lung and skin cancer, and may cause kidney and liver cancer according to a 1999 study by the National Academy of Sciences. The study also found that arsenic harms the central and peripheral nervous systems, as well as heart and blood vessels, and causes serious skin problems. It also may cause birth defects and reproductive problems.

Currently only Class A systems, using either surface water or ground water sources, are required to monitor for arsenic. The USEPA recently approved a final rule lowering the MCL for arsenic in drinking water from 50 parts per billion (ppb) to 10 ppb. Initially monitoring must occur every three years. After three test results are below the MCL, a waiver is available to reduce monitoring to once every nine years.

Radium and Radon

Groundwater may have a long enough residence time in the ground to pick up radioactive contaminants. Consequently, some groundwater aquifers in the United States have naturally occurring radioactive contaminants. Radium and radon are the main radioactive elements in groundwater that are potential health threats. Only Class A systems using groundwater sources are required to sample for gross alpha radioactivity, and at a frequency of at least once every four years.

8.7 Organic Chemicals

Many **synthetic organic chemicals (SOCs)** are included in the primary regulations. Organic contaminants originate from domestic, commercial and industrial activities. They can enter source surface and/or groundwater by direct runoff from illegal dumping or waste storage, industrial and sewage treatment plant discharge, and agriculture application of herbicides and pesticides. Some of these (benzene and carbon tetrachloride, for example) readily become airborne and are known as **volatile organic compounds (VOCs)**.

Public drinking water supplies must be sampled and analyzed for organic chemicals at least every three years. Both SOCs and VOCs must be monitored quarterly for one year. If sample results show Non-Detects (NDs), the monitoring frequency may be reduced to once every three years.

Trihalomethanes are of concern when water treatment includes chlorination. Chlorination of water containing either natural or artificial organics can result in the formation of a group of chlorinated by-products called total trihalomethanes (TTHMs). THMs are considered to potentially pose a health hazard. The MCL for TTHMs is 0.10 mg/L. Class A surface water systems and Class A groundwater systems not under the direct influence of surface water that use chlorine disinfection and serve fewer than 10,000 people are required to monitor for TTHMs once per year. Waives to reduce the frequency of monitoring may be granted under certain conditions. Consult with the ADEC Drinking Water Program for details.

8.8 Microorganisms

The presence or absence of living organisms, especially microscopic organisms (microorganisms) can be one of the most useful **indicators** of water contamination. The microorganism group of contaminants includes bacteria, viruses, and protozoa. The total coliform group of bacteria is used to indicate the possible presence of pathogenic organisms.

A group of bacteria, called coliforms, are perhaps the most important biological indicators of water quality. Coliforms are a broadly defined group of bacteria. They occur naturally in the soil and on vegetation as well as in the digestive tract of warm-blooded animals, including humans. It is necessary to make a distinction between two groups of coliforms: total coliforms and **fecal coliforms**.

Total coliforms refer to all the members of the coliform group regardless of origin. The total coliform group has been used for most of the twentieth century as the indicator of the possible presence of disease-causing microorganisms. These organisms are used as indicators because the analytical methods available to detect

them are inexpensive, they are present in large numbers in fecal matter of humans and other warm-blooded animals, and they survive outside the body longer than most pathogenic bacteria.

The presence of fecal coliforms provide stronger evidence fecal contamination, thereby increasing the probability of the presence of pathogens than do total coliforms. Fecal coliforms do not include coliforms found naturally in the soil and on vegetation. The presence of one particular bacteria, *Eschericia coli (E. coli),* confirms that the fecal coliforms are from humans.

The microbiological quality of water is determined by looking for the presence of bacteria indicative of contamination - namely, total coliforms. Fecal coliforms or *E. coli* will appear in water samples that may have been contaminated recently by fecal matter; thus they indicate the possible presence of disease-causing bacteria, viruses or protozoa. Water containing *E. coli* or fecal coliforms is not safe to drink.

8.8a Total Coliform Rule (TCR)

Alaska's **Total Coliform Rule (TCR)** requires owners of all Class A and Class B public water systems to routinely collect total coliform samples and deliver them to an ADEC approved certified laboratory (Appendix 1) for bacteriological examination at least monthly.

Under certain conditions a waiver may be granted to small systems, reducing the sampling requirement to once per quarter. State drinking water officials grant waivers only after a thorough system review.

The exact number of routine coliform monitoring samples a water system is required to collect is mandated by federal standards. Small water systems serving less than 1000 people are required to take a minimum of one sample per month unless **repeat samples** are required.

The state's Total Coliform Rule (TCR) requires:

- Routine total coliform monitoring
- Repeat sample collection
- Fecal coliform testing of positive total coliform samples
- A **sample site plan**, and if necessary
- Public notification

Routine coliform samples are collected monthly unless a quarterly waiver is granted by state officials. Routine samples should be collected early in the month to provide enough time to collect **replacement samples** if the original samples are damaged in transit or cannot be analyzed by the lab. Collection sites for bacteriologic samples must be designated on the sample site plan. Rotate sample collection sites monthly so that samples are representative of the entire distribution system.

Repeat samples must be collected if coliform bacteria are detected in the routine sample. Repeat samples must be collected within 24 hours after being

notified by the lab that the routine sample was unsatisfactory. Do not disinfect or change any treatment process prior to taking repeat samples.

If coliform organisms were detected in a routine sample, the owner/operator of a small-treated system must collect four repeat samples for each routine coliform-positive sample found. One repeat sample shall be taken from the site of the original positive, one repeat sample within five service connections upstream, one from within five service connections downstream, and one from another representative site in the distribution system.

Small systems with few service connections will need to adjust the location of repeat samples per instructions from their ADEC Drinking Water Program contact person. Any routine or repeat sample that is total coliform positive must also be analyzed for fecal coliforms or *E. coli.*

Note: After a total coliform-positive routine or repeat sample, a different monitoring and repeat sample frequency protocol must be followed (Table H). The water system owner/operator must collect a set of five routine samples the next month if coliforms were detected in any routine or repeat samples.

When **total coliform bacteria** levels are exceeded, the water owner/operator must notify the public served by the water system. The MCL is exceeded if:

- the limits given in Table I are exceeded.
- any repeat sample is positive for fecal coliforms or *E. coli*.
- a routine sample which is positive for fecal coliforms or *E. coli* is followed by a total coliform positive repeat sample.
- fecal coliforms or *E. coli* are detected in any total coliform positive sample, the system must notify ADEC immediately.

ADEC may allow a water system to forego fecal coliform or *E. coli* testing on a case-by-case basis if the system responds to every total coliform positive sample as if it contained fecal coliforms.

If an MCL is exceeded, the operator will be required to perform emergency chlorination (Chapter 7) and to issue a **Boil Water Notice**. A boil water notice notifies customers that water should be boiled vigorously at a rolling boil for at least 5 minutes before drinking it. Refer to Appendix 8 for an example of a Boil Water Notice.

Public water systems must notify customers to advise them of potential health hazards and to educate them about the importance of adequately financing and supporting the water system. Public notifications are required if your system:

- violates an MCL or treatment technique.
- fails to report or monitor for a contaminant
- fails to comply with the requirements of a compliance schedule prescribed under a variance or exemption.

The method of notification and the form and content of the message is very specific. Contact the ADEC Drinking Water Program for help is developing an adequate public notice.

A coliform monitoring sample site plan must be filed with, and approved by ADEC. Each public water system must sample according to a written sample site plan. Sample sites must be rotated throughout the distribution system. The sample site plan should include:

- A map of the water distribution system
- Sample locations marked on the distribution map
- A list and identification of distribution system pressure zones
- The addresses or identification numbers/names of buildings used as primary and backup sampling sites at each location
- The number of samples required by the system per month
- Distribution system rotation frequency
- Repeat sample procedure to address an unsatisfactory (positive) sample

Monitoring and Repeat Sample Protocol Following a Total Coliform-Positive Routine Sample		
Routine samples required per month	Number of **repeat** samples required	Number of **routine** samples *next month*
1	4	5
2	3	5
3	3	5

Table H: Monitoring and Repeat Sample Protocol (for a total coliform positive routine sample)

Routine Samples Required per Month	**Limits for Total Coliform Positive Samples Each Month**
Less than 40 samples per month	No more than one sample
More than 40 samples per month	No more than five percent of all monthly samples

Table I: Coliform MCLs

8.8b Significance of the Coliform Test

Coliform bacteria detected in any water sample warn of possible contamination. One test does not prove that contamination exists; more tests must be taken. Samples may have been contaminated from external sources or there may have been other problems such as non-sterile bottles, contamination of the sample bottle during sampling, or laboratory error. Another common problem, however, involve errors in sampling. The current regulations require that if a sample is positive (shows the presence of coliforms), the water supplier must take four repeat samples. Consequently, proper sampling technique and sampling precautions are critical.

8.8c Collecting a Bacteriological (BacT) Sample

- Obtain sterile bottles from the lab.
- Do not open a sample bottle until ready to fill.
- Do not rinse the bottle before filling! The tablet or white powder inside the sample bottle is **sodium thiosulfate**, which neutralizes any chlorine in the water.
- Select a sample tap. Always collect the sample from the cold-water tap. Select a faucet that is not leaking, non-swivel, and non-mixing.
- Do not sample from drinking fountains or outside hydrants.
- Avoid sample points located after water softeners, carbon filters, or cisterns serving single homes.
- Remove any faucet attachments (aeration screens, hoses, etc.).
- Remove screen from inside faucet and disinfect mouth of faucet with a chlorine bleach solution. If rubbing alcohol is used, remember alcohol requires contact time.
- Do not use a butane lighter to flame faucet.
- Open tap fully. Let water run to waste for two or three minutes (sufficient time to allow complete flushing of the service line).
- If you must use a mixing faucet, run the hot water tap for two minutes and then run the cold water tap for two or three minutes (always collect cold water sample).
- Reduce the flow (to about the diameter of a pencil), and fill the bottle. If the water dribbles to the faucet edge and contacts the metal (lips) before entering the bottle, the sample may be contaminated; readjust the flow or locate a different sampling tap.
- Collect the sample.
- Carefully remove the lid. Do not lay it down or touch the inside. Do not take the pill out of the bottle. Fill the bottle to the top of the label, or base of the neck. Leave an airspace that allows mixing by shaking at the lab.
- Replace the lid. Be sure to complete the information on the sample bottle label.

The sample should be shipped to the lab using the shortest transit possible. Keep the sample refrigerated on ice as much as possible. Regulation requires that analysis for coliform bacteria begin within 30 hours of collection and completed no later than 48 hours from the time the sample is drawn.

8.8d Positive (Hot) BacT Sample

If a sample is positive the following questions must be addressed:

- Was the sample properly taken?
- Was the aerator removed, tap flushed at full flow for 5 minutes and the sample bottle filled without touching interior of container, etc?
- Was work done on the water system that was not followed by adequate

disinfection when the work was completed?
- Is there a new pump, pipe, or have there been any distribution system repairs?
- Was a new well or backup well brought on line that was not disinfected?
- Was the sample site location the same or was a different or vacant building sampled?
- Is the well still properly sealed?
- Are there cartridge type filters in use on the water system?
- How long has it been since the cartridge was changed?

Disinfection of the water system may solve the problem if the source of the contamination is not due to an ongoing situation such as a cross connection, bad water source, or influence of the well by surface water. Follow the emergency disinfection of a well procedure in Chapter 7.

8.8e Invalid Sample

Owners/operators are primarily concerned with bacterial pathogens responsible for disease. However, not every bacterial organism causes disease. Bacteria are found on our skin, in our intestines and on plants and animals as well as in soil. Some harmless bacteria can interfere with the coliform test and make the results invalid. This happens when there are numerous non-coliform bacteria in the water and they interfere with the test method. This prevents coliforms from growing and is often reported in the sample result as:

- Too numerous to count non-coliforms (TNTC)
- Heavy growth non-coliforms

When non-coliform bacteria interference occurs, a replacement sample is required. It must be collected during the same calendar month in which the routine sample was due.

8.9 Interpreting Laboratory Analyses

As a public water system owner, you are required to monitor the quality of your drinking water on a routine basis. The frequency of the required monitoring is established by the State Drinking Water Regulations. Most test procedures must conform to strict analytical standards and be performed according to approved standards or methods. Most frequently a certified laboratory performs this testing.

Test results are transmitted to both the system owner and to the State Drinking Water program. If an MCL is exceeded or another problem is noted with the water analysis, a drinking water program representative will contact the system owner.

However in order to communicate effectively with drinking water program people and your customers, you need to

know some basic information in order to understand the reports you receive from the laboratory.

Comments on Sampling
Virtually every contaminant or contaminant group has different sampling procedures and handling requirements. The bottles may be plastic or glass and of a specific size depending on the analysis to be performed. Some analyses require that a preservative or other chemical be added to the sample. This is often done at the laboratory before they send you the sample bottles. Using an empty pickle jar, regardless of its cleanliness, will most likely invalidate the sample results.

When you request bottles from the lab for a specific analysis, the bottles will be prepared by the lab for that analysis. Generally, the bottles should not be rinsed. Very specific sampling instructions will accompany the sample bottles. *Read these instructions carefully!*

Once the samples have been taken, fill out the paperwork that accompanied the bottles and take the samples directly to the laboratory. If you cannot get them directly to the lab, the samples should be chilled or placed on ice in special coolers provided by the laboratories. Do not leave them on the dash of the car in the hot sun.

Bacteriological Reports
Bacteriological lab reports are generally straightforward. The format may change depending on the laboratory you are using, but the same information will be on the report form.

Information completed by the water supplier:

- The information to be completed by water supplier is specific to your water system and is generally straightforward. *It is important to include your PWSID*.
- Sample Type: It is important that you designate whether this is a routine sample, check sample or special purpose sample. Routine samples are used to calculate compliance and should be differentiated from “other” samples. Also designate the sample as “Treated water” or “Untreated water”
- It is critical that the sample # on the bottle match the sample location, *especially if multiple samples are taken at the same time*. Sample time and sample date will be used to determine the “age” of the samples. If samples are too old, they may be rejected or invalid.

Information completed by the laboratory:

- Results: The box will be accordingly – “Satisfactory”, “Unsatisfactory” or “Sample too long in transit” or “Invalid Sample”.
- Analytical Method: The box checked will denote which method was used to analyze the sample: “Fermentation tube” or “Membrane Filter”. Most laboratories in Alaska are using the membrane filter method, but the fermentation tube or most probable number (MPN) method is also an approved method
- Test Result: for membrane filter technique, this is the number of colonies; for the fermentation tube method, this is the number of positive tubes and for the

presence/absence method, this is either a “P” or an “A”.

- Notes written by the analyst: In this case, there was “Confluent growth TNTC with coliforms”. NOTE: TNTC = Too Numerous To Count.

Chemical Analyses Reports

Typically, most small-treated water systems test their water for total coliforms on a monthly basis. Chemical analyses are run far less frequently. Consequently, small system owners likely will have much less experience reading the laboratory reports for chemical analyses.

Units

Before you can understand the lab reports, a basic understanding of the units used to report concentrations is needed. Since the Drinking Water regulations list the MCLs for various contaminants in milligrams per liter (mg/L), most laboratories report results as milligrams per liter or mg/L. However, some results may be reported in micrograms per liter. A milligram is 1/1000th of a gram and a microgram is 1/1000th of a milligram. Since there are 28 grams in an ounce, you can see that a milligram is quite a small amount and a microgram is a thousand-fold smaller. A liter is slightly more than a quart. So, as you can see, we are concerned about increasingly smaller and smaller amounts of contaminants in our drinking water.

Although, the MCLs are typically listed in mg/L, not all analysts or drinking water professionals you interact with may use the same units when discussing your lab results. Some may use milligrams per liter and others may use parts per million (ppm) to refer to the same result. Similarly, some may use micrograms per liter while others use parts per billion (ppb), when referring to the same analytical result. In the drinking water industry, these terms are used interchangeably and mean essentially the same thing; 100 micrograms/liter is the same as 100 ppb, which is the same as 0.1 mg/L or 0.1 ppm.

The relationship between milligrams per liter and micrograms per liter comes in handy when discussing concentrations when the number of milligrams per liter is a decimal. For example, since 1 milligram equals 1000 micrograms, it is often less cumbersome to discuss very small concentrations in micrograms instead of milligrams. For example, the current MCL for total trihalomethanes is 0.1 mg/L. This is the same as 100 ppb. Instead of saying the concentration is “zero–point-one” mg/L, analysts and drinking water professionals often say the concentration is 100 parts per billion. Similarly, the current MCL for arsenic is 0.05 mg/L; this is commonly referred to as 50 ppb, instead of saying “zero-point-zero-five mg/L.

Another unit that is less frequently used, but is still used occasionally, especially among technicians who have worked with water softeners for a long time, is grains per gallon or gpg. Although it is rarely, if ever, used by laboratories today, it used to be standard analytical procedure to list the hardness concentration in grains per gallon. One grain per gallon is equivalent to 17.1 mg/L. So a hardness of 15 grains is equivalent to 256.5 mg/L.

Typical Chemical Analysis Lab Report

A typical lab report for inorganic chemical analyses can be found on the next page. Most laboratories are providing a "key" on their forms to help explain what various abbreviations and acronyms stand for, but if an owner/operator does not understand what something on the report form means, they will not be able to respond appropriately to questions regarding the analyses. *If you do not understand what something on the report means or the significance of it, ask the laboratory to explain it to you. You are paying for this service; it is your report.* An explanation of the "numbered items" is on the sample report following this section.

1. The time between sampling and analysis can be critical to the validity of the test. This data should be checked for accuracy, especially if the sample is rejected due to holding time problems related to sample preservation.
2. Flag Definitions: This section is provided as a courtesy by the laboratory. It defines the abbreviations and acronyms that appear on the form and the designations found under the "Flag" heading (# 7).
3. Your name, address, etc. *Double check the PWSID # to make sure the sample "belongs to you". It is also a good idea to give each sample a "client sample ID" that is unique to your system to ensure that the results are definitely for your sample and there was no mix up at the laboratory*. The labs handle hundreds of samples each day and also run samples in groups. They are very careful about tracking samples and maintaining sample integrity, but you should always check this information to make sure sample identification is consistent with your records and PWSID.
4. Parameter: This is the chemical that was analyzed. In this case, several of the primary inorganics were analyzed, as well as sodium, zinc, iron and manganese -secondary contaminants and calcium and magnesium - the metals that contribute to hardness.
5. Result: The result is the concentration that was detected. Note that several do not have a numerical value listed. Instead "<MDL" is listed – this means that for that particular parameter "less than the Method Detection Limit" was present.
6. Units: Note that the units are all mg/L (milligrams per liter or parts per million) for this particular analysis.
7. Flag: Where appropriate a "flag" is listed. See flag definitions (#2). Flags alert you to instances where the actual concentration cannot be accurately determined, but a result may be listed based on acceptable analytical procedures.
8. MDL = Method Detection Limit. This refers to the test method. All methods have a limit below which the actual concentration cannot be accurately determined. The number in this column lists the detection limit for each parameter using that particular method. If another method had been used (other than USEPA 200.7) a higher or lower MDL might be expected.
9. MCL = Maximum Contaminant Level. This column lists the MCL that is listed in the Alaska State Drinking Water Regulations. If the number in

the Result column exceeds the number in the MCL column, your sample has exceeded the concentration allowed under the regulations for that parameter. An "H" would appear in the Flag column if that were the case.

10. Prep Method and Prep Date: If a sample required special preparation before analysis it would be described here.
11. Analysis Method: This column lists the analytical method used. This is important from a regulatory standpoint, because specific methods are called out in the Drinking Water Regulations. If the method used is not an "approved method", the sample results will not be valid for compliance purposes. The laboratories in Alaska are very good about making sure the correct method is used if the sample is to be used for compliance purposes. In this case, most of the parameters could be analyzed using one method (EPA 200.7). However, the last three parameters listed were analyzed using EPA 200.9.
12. Analysis Date: This is the day the sample was analyzed.

These are your analyses, you pay for them. If you have any questions or need clarification, you should talk to the laboratory. Your local Drinking Water Program person may also be able to help. Appendix 9 lists typical fees for drinking water analyses.

NORTHERN TESTING LABORATORIES, INC.

3330 INDUSTRIAL AVENUE
5761 SILVERADO WAY; UNIT N
POUCH 340043

FAIRBANKS, ALASKA 99701
ANCHORAGE, ALASKA 99518
PRUDHOE BAY, ALASKA 99734

(907) 456-3116: FAX 456-3125
(907) 349-1000 FAX 349-1016
(907) 659-2145 - FAX 659-2146

1
Report Date: 10/24/01
Date Arrived: 10/3/01
Date Sampled: 10/2/01
Time Sampled: 11:41
Collected By:

Attn:
Phone:
Fax:
3 NTL Lab#: F302363
Level
Client Sample ID:
Location/Project: Annual Treated Water
COC #: 31339
Sample Matrix: Water
PWS #:

2 Flag Definitions
MDL = Method Detection Limit
MCL = Maximum Contaminant

B = Below Regulatory Minimum
H = Above Regulatory Maximum
M = Matrix Interference
J = Best Available Estimate
U = Less Than Detection Limit

Comments:

4	5	6	7	8	9	10		11	12
Parameter	**Result**	**Units**	**Flag**	**MDL**	**MCL**	**Prep Method**	**Prep Date**	**Analysis Method**	**Analysis Date**
Aluminum	< MDL	mg/L	U	0.05	0.2			EPA 200.7	10/8/01
Barium	0.003	mg/L	J	0.003	2			EPA 200.7	10/8/01
Beryllium	< MDL	mg/L	U	0.002	0.004			EPA 200.7	10/9/01
Calcium	0.53	mg/L		0.04				EPA 200.7	10/9/01
Copper	0.012	mg/L	J	0.009	1			EPA 200.7	10/8/01
Iron	< MDL	mg/L	U	0.03	0.3			EPA 200.7	10/10/01
Magnesium	0.25	mg/L		0.04				EPA 200.7	10/9/01
Manganese	< MDL	mg/L	U	0.003	0.05			EPA 200.7	10/10/01
Nickel	< MDL	mg/L	U	0.01	0.1			EPA 200.7	10/9/01
Sodium	5.76	mg/L		0.08	250			EPA 200.7	10/22/01
Zinc	0.244	mg/L		0.009	5			EPA 200.7	10/9/01
Antimony	< MDL	mg/L	U	0.003	0.006			EPA 200.9	10/24/01
Arsenic	< MDL	mg/L	U	0.003	0.05			EPA 200.9	10/15/01
Cadmium	< MDL	mg/L	U	0.0001	0.005			EPA 200.9	10/15/01

Reported by Jeremy Nicoll
Fairbanks Chemistry Supervisor

8.10 Consumer Confidence Reports

A **Consumer Confidence Report (CCR)** is an annual drinking water quality report issued to consumers of each Class A community public water supply system on the source of their water and the levels of contaminants found in the drinking water. The first reports were due October 1, 1999, and the reports are to be available to consumers by July 1 each year thereafter. Alaska 's small water systems, systems serving less than 500 people per day and less than 100 service connections, may distribute their CCR's by mail, door-to-door delivery or by posting in an appropriate location. Also, the report must be available upon request.

Public water systems are free to enhance their reports in any useful way, but each report must provide consumers with the following fundamental information about their drinking water:

- Identification of the aquifer, lake, river, or other source of the drinking water
- A brief summary of the susceptibility to contamination of the local drinking water source, based on the source water assessments that states are completing over the next five years
- How to get a copy of the water system's complete source water assessment
- The level (or a range of levels) of any contaminant found in local drinking water as well as USEPA's health-based standard (MCL) for comparison
- The likely source of that contaminant in the local drinking water supply
- The potential health effects of any contaminant detected in violation of an USEPA health standard, and an accounting of the systems actions to restore safe drinking water
- The educational statement for vulnerable populations about avoiding *Cryptosporidium*
- Educational information on nitrate, arsenic, or lead in areas where these contaminants are detected above 50% of USEPA's standard
- Phone numbers of additional sources of information, including the water system and USEPA's Safe Drinking Water Hotline (1-800-426-4791)

CCRs are the centerpiece of the right-to-know provisions in the 1996 Amendments to the SDWA. The Amendments contain several other provisions aimed at improving public information about drinking water, including the annual public water system compliance report and improved public notification in cases where a water supplier is not meeting a contaminant standard. The Amendments also call for increased public participation in the protection and delivery of safe drinking water. For example, citizen advisory committees are helping states to implement their source water assessment activities and are involved in decisions about allocating the state revolving loan fund that provides funding for drinking water infrastructure improvements.

8.11 Surface Water Treatment Regulations

Bacteria and other microbes in public water supplies may pose immediate and serious health risks. Since these contaminants are often difficult to detect through traditional testing, the **Surface Water Treatment Rule (SWTR)** requires most surface water sources to be treated through a system of disinfection and/or filtration.

Remember from Chapter 5 that disinfection is a process that kills or inactivates disease-causing organisms in drinking water through the use of chemical oxidants such as chlorine, ozone and ultra-violet light. Also keep in mind those Groundwater Systems Under the Influence of Surface Water must meet requirements of the SWTR. GWUDISW is any water beneath the surface of the ground with:

- significant occurrence of insects or other macroorganisms, algae, or large- diameter pathogens such as *Giardia lamblia*, or
- significant and relatively rapid shifts in water characteristics such as turbidity, temperature, conductivity, or pH, which closely correlate to weather or surface water conditions.

ADEC is responsible for determining whether ground water is under the direct influence of surface water.

The SWTR is based on the “multiple barrier” approach to surface water treatment. Disinfection is required for <u>all</u> surface water systems. Filtration is required for all surface water systems and for groundwater systems under the direct influence of surface water that fail certain SWTR standards including those for coliforms, turbidity, *Giardia lamblia*, and residual disinfectants. The SWTR requirements that apply to your water system will depend on the type of water source you use.

If you are a Class B surface water system, you must be sure to disinfect and filter the water. In addition, you must send reports to the state documenting compliance with all treatment and monitoring requirements.

If your system uses a groundwater source that is under the direct influence of surface waters (as determined by ADEC) and if it exceeds applicable limits for coliform bacteria, turbidity, disinfectant residuals, or other criteria (collectively called "filtration avoidance criteria"), then you must install filtration.

Generally, filtration is not required for systems using groundwater under the direct influence of surface water that are able to meet all of the filtration avoidance criteria. For more information regarding the SWTR, contact your local ADEC office.

8.12 Long Term 1 Enhanced Surface Water Treatment Rule

The **Long Term 1 (LT1) Enhanced Surface Water Treatment Rule** applies to surface water and groundwater under the direct influence of surface water systems serving fewer than 10,000 people. It should be noted that this will be the first time that systems serving fewer than 10,000 people will have to comply with federal **Disinfectant/Disinfection By-Product (D/DBP)** standards. The 1979 total trihalomethane (TTHM) regulation was only applicable to systems serving greater than 10,000 people.

The intent of LT1 provisions is to maintain microbial protection while complying with the new D/DBPR standards.

The proposed LT1 provisions generally parallel the Interim Enhanced Surface Water Treatment Rule (IESWTR) for systems serving greater than 10,000 people. These provisions include:

- A treatment technique requiring a 2-log (99%) Cryptosporidium removal requirement;
- Strengthened combined filter effluent turbidity performance standards and new individual filter provisions;
- Disinfection benchmarking provisions to ensure continued microbial protection;
- Inclusion of *Cryptosporidium* in the definition of GWUDISW and in the watershed control requirements for unfiltered systems; and
- Requirements for covers on new finished water reservoirs.

8.13 Disinfectants/Disinfection Byproducts Rule

Many water systems treat their water with a chemical disinfectant in order to inactivate pathogens that cause disease. The public health benefits of common disinfection practices are significant and well recognized. However, disinfection poses risks of its own.

Chlorine can react with naturally occurring organic material in water to form **Disinfection Byproducts (DBPs). DBPs** are also formed during disinfection with alternate oxidants such as ozone. The health significance of most DBPs is unknown, although some are known or thought to pose a relatively small theoretical cancer risk to humans at the concentrations found in disinfected drinking water. Research on DBPs continues so that health effects can be better understood and considered in the regulation of DBPs.

Surface water systems or groundwater systems under the direct influence of surface water that serves fewer than 500 people must conduct routine monitoring for total trihalomethanes(TTHMs) and the total of **five haloacetic acids (HAAs)**.

The Stage 1 DBP rule lowers the current TTHM MCL to 0.08 mg/L and sets an

MCL for the total of HAA5 at 0.06 mg/L. Compliance with these MCLs is based on running annual averages of monitoring data, similar to the current TTHM MCL, because the health effects of concern are based on a lifetime of exposure. These MCLs are intended to limit the presence of known DBPs.

In addition, the Stage 1 DBP rule is expected to include a maximum residual disinfectant level goal (MRDLG) and a maximum residual disinfectant level (MRDL) for chlorine at 4.0 mg/L (based on free chlorine). Compliance would be based on a running annual average of monthly averages of samples taken in the distribution system. A running annual average is used as the basis for compliance because suspected health effects are long term. These levels are thought to be the lowest feasible MRDLs for some systems that would not compromise microbial protection.

8.14 Proposed Groundwater Rule

The USEPA is proposing a rule that specifies the appropriate use of disinfection in groundwater and addresses other components of groundwater systems to assure public health protection. The proposed rule will apply to all public groundwater systems or systems that mix surface and ground water. It is scheduled to be issued as a final regulation in the spring of 2003. Presently, only surface water systems and systems using groundwater under the direct influence of surface water are required to disinfect. This regulation will require disinfection of groundwater ”as necessary” to protect the public health. Most groundwater system will be required to disinfect unless that can meet a set of specific treatment goals. Small groundwater systems would be wise to plan for this eventuality. Your local ADEC representative can give you more detailed information about the proposed regulation.

8.15 Specific Monitoring Information

Appendix 7 lists the compliance monitoring requirements for Class A & B groundwater and surface water systems. For specific monitoring information and variances that may apply to the water system you own/operate, call your local ADEC Drinking Water Program representative.

Chapter 9 – Safety

This section will introduce the topic of safety to the reader but is not intended to provide detailed information on all the safety topics important to operators. Each of us is responsible for his or her own safety and for the safety of others working in or entering our facilities. The water industry is one of the most hazardous, so it is very important for operators to be informed about situations that pose a safety risk.

9.1 Safety Conditions

You may encounter potentially hazardous conditions on a regular basis while operating, maintaining, and repairing water system equipment. You should be aware of these hazards and use good judgment when you encounter a potentially hazardous situation. "The life you save may be your own."

Accident prevention is everyone's job, but it is the employer who is ultimately responsible for providing a safe workplace. Some of the hazards an operator may encounter include, but are not limited to:

- Lifting injuries
- Electric shock
- Slips and falls
- Chemical burns
- Eye injuries
- Excavation accidents (cave-ins)
- Construction accidents
- Inhalation accidents (dust, toxic gases and vapors)
- Oxygen deficient confined spaces (less than 19.5% oxygen)

Accidents are the result of unsafe actions by employees or unsafe conditions that exist in the water system.

Unsafe actions include, but are not limited to:

- Removing or disabling machinery safety devices
- Failure to wear personal protective equipment
- Using equipment or tools not designed for the job
- Using defective equipment or tools
- Standing on or riding the outside of moving equipment
- Failure to secure or tie down heavy loads
- Operating vehicles, including heavy equipment, at an unsafe speed
- Failure to use lockout/tagout devices

Some of the more common unsafe conditions found at a small water system may include, but are not limited to:

- Poor housekeeping
- Improper storage of chemicals
- Doors removed from electrical panels
- Machinery guards or safety devices missing
- Fire and explosion hazards
- Low clearance hazards

- Improperly secured ladders or scaffolds
- Protruding objects
- Inadequate lighting
- Noise above safe decibel levels
- Lack of warning placards
- Confined spaces

You should keep your water system facilities clean and orderly. Emergency equipment and doorways should be kept clear and machine guards replaced after repairing equipment. Doors should be replaced on the electrical panels when you complete a wiring job or replace a breaker.

The door to the pump house should open outward for ease in entering and leaving the structure. Abnormal machine or equipment operation, electrical hazards or other unsafe conditions should be corrected promptly. Do not let unsafe conditions become commonplace. Eventually, an unsafe condition will result in an accident.

Unfortunately, it is often the five-minute task that causes many injuries. Quick fixes usually promote unsafe acts. Do not let five-minute tasks result in an injury to yourself or an employee.

Become skilled at recognizing unsafe conditions. Your knowledge of unsafe conditions and unsafe acts gives you foresight to correct a hazardous situation before an accident occurs. Together materials handling, falls, falling objects and machinery cause more than two-thirds of all workplace injuries.

9.2 Lifting

Operators are routinely required to lift and move various objects and materials. One-third of all injuries result from improper lifting and handling of heavy objects. Nearly a half million disabling job injuries are reported annually and most are back injuries. Of every one hundred injuries, thirty-three are injured because of improper lifting.

You should know the proper methods for lifting heavy objects (Figure 9.1). Here are the steps for safe lifting:

- Get a good footing
- Place feet about shoulder width apart
- Bend at the knees to grasp the weight
- Keep the back straight and vertical
- Get a firm hold
- Keep the load close to the body
- Keep the back as straight and vertical as possible
- Lift gradually by straightening the legs
- Do not twist your body while lifting
- Get help when the load is too heavy or bulky for you to lift comfortably
- Reverse the procedure when putting the load down

Figure 9.1: Safe Lifting Procedures

Carrying heavy, bulky or long objects may result in a fall. Check your path beforehand and pick up or avoid slipping or tripping hazards. In Alaska we have a lot of snow and ice in the wintertime, so take a few extra minutes to clean off icy stairs and clear a safe pathway. Make sure the object is balanced and your grasp secure before walking. Take your time, particularly on steps and through tight places. Make sure large objects do not bump or catch on anything and throw you off balance. Carry objects so you can see where you are going. Get help if you need it or save the job until help is available. Do not risk straining your back or falling. Wear steel-toed boots to protect your feet in case you drop a heavy load.

9.3 Electrical Safety

Operator work around electrically powered equipment all the time. Consequently, they are exposed to dangerous situations involving electricity. Electrical measurements should be taken be a licensed electrician. In an emergency, which one is not available, follow these safety precautions:

- Remove all jewelry; including earrings, rings, watches, necklace, metal-rimmed glasses and large belt buckles
- Wear shirts with tight-fitting sleeves
- Fasten the panel door open
- Wear safety goggles
- Wear electrical safety gloves
- Have a second person standing by when making the measurement
- Make the measurements with one hand, keep the second hand in you pocket

Of course, high voltage can cause serious injury. But even low voltage can cause serious injury if the current is sufficiently high. Table J and Figure 9.2 show the amperage flow through various parts of the human body and the effect the regular 60 Hz current has on the average human.

Effects of 60 hz Current on an Average Human		
	Current Values Through Body Trunk	**Effect**
Safe Current Values	1 Milliamp, or less…….	Causes no sensation – not felt. Is at threshold of perception
	1 to 8 Milliamps…….	Sensation of shock. Not painful. Individual can let goat will, as muscular control is not lost. (5ma is accepted as maximum harmless current intensity).
Unsafe Current Values	8 to 15 Milliamps……...	Painful shock. Individual **can let go** at will, as muscular control is not lost
	15 to 20 Milliamps…….	Painful shock. Muscular control of adjacent muscles lost. **Cannot let go.**
	20 to 50 Milliamps……...	Painful. Severe muscular contraction. Breathing is difficult
	100 to 200 Milliamps……...	Ventricular Fibrillation (A heart condition that results in death – **no known remedy**).
	200 and over Milliamps……...	Sever burns. Severe muscular contractions, so severe that chest muscles clamp heart and stop it during duration of shock. (This prevents Ventricular Fibrillation.)

Table J: Effects of 60 hz Current on an Average Human

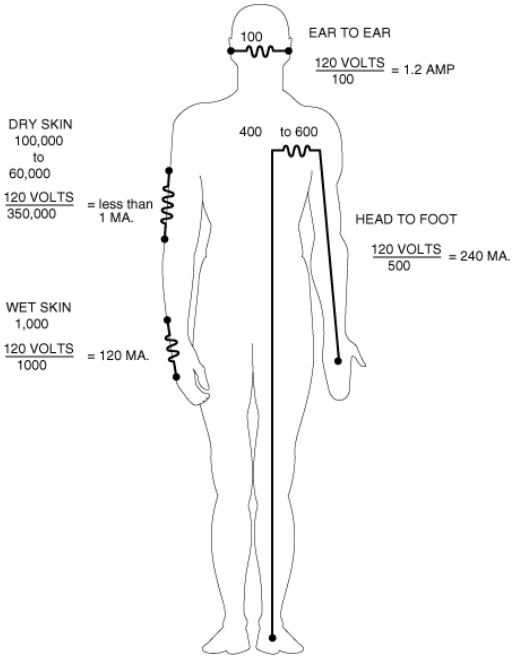

Figure 9.2: Body Resistance

9.4 Lockout/Tagout

Plant machinery and equipment power by electricity must be de-energized and isolated before maintaining or servicing. Isolation and de-energizing equipment is required to protect yourself and other workers from unexpected start-up of the equipment or machinery or from release of energy (grounding).

OSHA standards require each facility to have a **lockout/tagout** plan. The most effective way to protect operators or maintenance personnel is to use a lockout device (Figure 9.3) or an energy-isolating device.

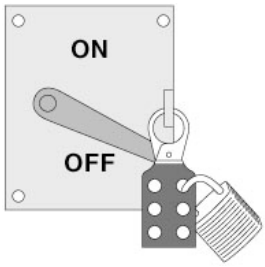

Figure 9.3: Lockout Device

Tagout means to place a warning tag on or near the lockout or energy-isolating device. The tag (Figure 9.4) must include the name of the person applying the tag, the date and the reason that the equipment is being locked out.

Figure 9.4: Warning Tag

9.5 Chemical Handling and Storage

People work with or around chemicals and chemical products every day. Many of these materials have properties that make them hazardous: they can create physical (fire, explosion) and/or health hazards (toxicity, chemical burns.) There are ways to work with chemicals that can reduce to a negligible level, the probability and consequences of an accident. Chemical safety is inherently linked to other safety issues including laboratory procedures, personal protective equipment, electrical safety, fire safety, and hazardous waste disposal.

The following sections provide general guidelines for chemical safety. Follow these basic guidelines when working with chemicals:

- Assume that any unfamiliar chemical is hazardous
- Know all the hazards of the chemicals you use; refer to MSDS

- Consider any mixture to be at least as hazardous as its most hazardous component
- Never use any substance that is not properly labeled
- Follow all chemical safety instructions precisely
- Minimize your exposure to any chemical, regardless of its hazard rating
- Use appropriate personal protective equipment
- Use common sense at all times

9.5a Sodium Hypochlorite

As you have learned, sodium hypochlorite is a liquid sold with varying strengths. Common household laundry bleach is 5.25% available chlorine. Solutions of approximately two and three times this concentration are also available.

Since sodium hypochlorite is a liquid, the hazards of fire and chlorine fumes are often underestimated. Some basic safety precautions should be followed when using sodium hypochlorite.

- Store containers in a cool, dark area away from possible falling objects or physical damage
- Avoid contact with the eyes or with the skin
- Wear personal protective equipment at all times
- Keep the container tightly closed and away from combustible materials. If spilled, wash down thoroughly and do not allow spills to remain in contact with cloth, paper, oil products or other organic matter.
- Keep containers away from heat and fire
- Never use in combination with acids, vinegar, toilet bowl cleaners or any other cleaning agents

Fires have occurred spontaneously where rags and other combustible organic materials soaked with sodium hypochlorite have been allowed to stand where a heat source may have been present.

9.5b Calcium Hypochlorite

Calcium hypochlorite is supplied as a powder, in small granular form, or compressed into tablets. As such it can more easily be packaged in small quantities, transported, and, if simple precautions are taken, handled safely. Contrary to popular belief, this “safe” form of chlorine causes a great number of accidents. The appearance and packaging can be very misleading.

Failure to adhere strictly to the rules of safe handling of calcium hypochlorite can prove disastrous.

Examine closely these care and handling rules that are summarized from the information published by the manufacturers:

- Never mix calcium hypochlorite with anything but water.
- Store in a cool, clean, dry area in the original container and always keep covered. Most safe containers have a plastic bag liner which should not be removed and which should also be carefully closed and sealed. A separate storage area is recommended for storage.
- The storage area should be clean and located away from any combustible material and should not be located where chlorine fumes will cause corrosion to equipment.
- Metal drums should be kept upright and should not be dropped, rolled or skidded.
- When measuring calcium hypochlorite to make up solutions, use only a plastic, glass or enameled measuring cup that is completely clean and dry.
- Calcium hypochlorite is a strong oxidizing agent. It *must not* be allowed to come in contact with heat, acids or any combustible materials. Combustible organic materials include paper, rags, beverages, tobacco, oil base products, etc. Calcium hypochlorite must be kept away from heat sources, such as matches, open flames, lit cigarettes and other forms of heat.
- Never permit calcium hypochlorite to contact the eyes. If you get calcium hypochlorite in your eyes, flushed immediately and thoroughly with water.
- Always fill mixing vat half way with water, then add the calcium hypochlorite. Never add water to calcium hypochlorite because a violent chemical reaction may occur. Rinse empty containers thoroughly with water.

In case of a fire or hypochlorite spill, contact your local fire department.

9.5c Chlorine Gas

The use and handling of chlorine gas presents some serious safety challenges. Consequently, *operators who use gas chlorine must be thoroughly trained*. Such training is beyond the scope of this manual.

Pure chlorine is shipped in steel containers. To protect the valve keep the cap on the cylinder when the cylinder it not in use. Since chlorine in the cylinders is under pressure, and pressure increases when temperature increases, cylinders have a special safety feature to prevent explosion. This feature is a soft metal plug that is designed to melt at between 158°F and 165°F. In the case of fire, this plug will melt allowing the chlorine gas to escape, rather than allowing pressure to build up to the point where the cylinder might eventually rupture.

Small leaks can be detected by using an aspirator bottle of strong ammonia. Chlorine gas will react with ammonia to

form a “white cloud.” Leak detectors are also recommended in chorine gas rooms.

Below are the more common safety rules for handling and storing gas chlorine cylinders.

- When moving cylinders, the valve protection hood should be in place at all times.
- Cylinders must not be dropped or struck.
- A safety chain or strap should be placed around the cylinder and affixed to a wall, pipe, etc. to prevent the cylinder from tipping over in the event it is accidentally hit or pushed.
- Cylinders should be stored in an upright position.
- Cylinders should not be stored near a ventilating system, passageways, or below ground in unventilated rooms.
- Grease or oil should never be on, or around, chlorine fittings or connections.
- If there is any indication of the presence of chlorine in the air, immediate action should be taken to correct the leaking condition. Chlorine leaks that are left alone will always get worse.
- If an extensive chlorine leak is found, all persons should be kept away from the area to prevent exposure to the toxic gas – preferably upwind and at a higher elevation.

9.6 Material Safety Data Sheets (MSDS)

A **Material Safety Data Sheets (MSDS)** is a compilation of the information known about a chemical that relates to assessing the hazards of that chemical. Chemical manufacturers are required by OSHA to provide MSDS for all hazardous chemicals. The MSDS can tell you what Personal Protective Equipment (PPE) is needed when handling that specific chemical, what to do in case of a spill, and first aid procedures.

Before using any chemical, read the container label and the appropriate MSDS. Container labels and MSDS are good sources of information for chemical safety. They provide the following information:

- Hazardous ingredients
- Exposure limits
- Physical and chemical characteristics, including the boiling point, vapor pressure, color and odor
- Physical hazards, including the flammability, explosiveness, and reactivity
- Health hazards, including toxicity and carcinogenicity
- First-aid procedures
- Proper leak, spill, and disposal techniques
- Proper storage and handling procedures
- Other special provisions

Chemical manufacturers should provide MSDS and buyers should receive an MSDS with the shipment. If an MSDS is not with the shipment, you should request one from the vendor. MSDS can also be found on the web by

searching under the manufacturer's name. A good general source of MSDS is Cornell University website (msds.pdc.cornell.edu/msdssrch.asp)

Refer to Appendix 10 for an example of a MSDS.

9.7 Personal Protective Equipment

Personal Protective Equipment (PPE) may be uncomfortable and increase stress, but is for your protection. When wearing PPE, the body's ability to cool is usually diminished. Nevertheless, PPE is frequently required to reduce the risk of injury. PPE includes steel-toed boots, safety glasses or goggles, face shields, earplugs, gloves or chemical protective clothing. The employer is responsible for providing PPE for their employees.

Respiratory protection equipment is commonly used because of the danger of inhalation, which can provides a route of entry into the bloodstream for dangerous volatile chemicals. There are two types of respiratory protection devices called respirators: air purifying and air supplying. Both consist of a face piece connected to either an air source or an air-purifying device.

The air-purifying respirator uses cartridges with filters to purify air before it is inhaled. This type of protection is not adequate in an oxygen deficient atmosphere.

A respirator with its own air source is called a supplied-air respirator or SCBA (Self Contained Breathing Apparatus). It consists of either a self-contained unit that the worker wears or a hose connecting a worker to a remote air source. The SCBA provides continuous positive air pressure into a facemask.

9.8 Confined Spaces

A **confined space** means a space that:

- is large enough and configured such that an employee can enter and perform assigned work.
- has limited or restricted means for entry or exit
- was not designed for continuous occupancy.

Some examples of confined spaces include manholes, sewers, boilers, pipelines, dug wells, fuel tanks, storage tanks, tanks on haul -trucks, septic tanks, sewage lift stations, and valve vaults. Tanks and underground vaults are the types of confined spaces most frequently encountered by the water operator.

Air monitoring should be conducted before entering a confined space and while workers remain in the space. A confined space may have an oxygen-deficient atmosphere or an explosive atmosphere. The buddy system should be used when working in a confined space, with one person *always*

remaining outside the confined space. In the event of an accident, the person on the outside of the confined space should *never* enter the space to attempt a rescue. That person should immediately call for help.

In the event that the confined space is oxygen deficient, under no circumstances should an air-purifying respirator be used. Always use a SCBA. If you are required to enter confined spaces on a regular basis, it is recommended that you attend a confined space entry class for a more in-depth look at the subject.
.

Chapter 10 - Math

10.1 Introduction

Assuming Rudolph was in front, there are 40,320 ways to arrange the other eight reindeer. If you add up the numbers 1-100 consecutively (1 + 2 + 3 + 5 + …) the total is 5050.

Relax, this math section will be very basic. The certification exam does not require an operator of a small-treated water system to be a mathematician. This chapter deals with basic math that is required for you to accomplish tasks associated with operating your water system.

Someone once asked Albert Einstein how many feet were in a mile. "I don't know," he replied, "Why should I fill my head with information I can look up in a reference guide within two minutes?" That reasoning is why a math formula sheet is included as Appendix 6. Use the formula sheet as your reference guide. Do not cram your head full of formulas preparing for your certification exam. You'll have a formula sheet in front of you.

The formula sheet is similar to the formula sheet provided by ADEC when you take the certification exam. Look the formula sheet over and be familiar with it prior to taking the exam.

Learn to identify what a math problem is asking, then use the formula sheet to plug in the numbers to solve the math problem. Using Albert Einstein's logic, why try to memorize mathematical formulas when you can look them up on the formula sheet during the exam?

Also, an approved calculator can be used during certification exams. So practice and be familiar with the calculator you will use when taking the certification exam.

Once again, the section is very basic. However, to pass the operator certification examination, you must know how to do certain calculations. Calculating and adding the correct chemical dosage to drinking water can be the difference between life and death.

Solving math problems is not any different than solving any type of problem. It requires practice in manipulation and knowledge of what manipulations to make. Below is an approach to solving math problems:

- Understand the problem
- Decide what the problem is asking
- List the information given
- Make a drawing of the information in the problem, if appropriate
- Pay attention to the units given and required
- If the calculation calls for an equation, write it down
- Pick the appropriate formula
- Refer to the formula sheet, and fill in the data in the equation
- Look to see what is missing in the equation – what to solve for
- Perform the calculations necessary to solve the problem
- Review your work
- Record your answer

10.2 Averages

An average is a way of representing several different measurements as a single number. An average is the total values of a series divided by the total number in the series.

Problem*:*
Find the average of the following series of numbers: 90, 120, 75, 250, 150

Solution*:*
Add the five numbers together:
90 +120 + 75 + 250 + 150 = 685

Next, divide the total by the number in the series: 685/5 = 137

Problem*:*
Flow measurements were taken twice a week for a month. Find the average daily flow for the month: 1200 gpd; 2250 gpd; 2600 gpd; 1800 gpd; 1900 gpd; 2200 gpd; 2500 gpd; 1100 gpd.

Solution*:*
Add the eight numbers together:
1200 gpd + 2250 gpd + 2600 gpd + 1800 gpd + 1900 gpd + 2200 gpd + 2500 gpd + 1100 gpd = 15,550 gpd

Next divide the total by the number in the series: 15,550 gpd/8 = 1943.75 gpd

Problem*:*
Find the average chlorine residual for the week given the following: Monday residual 0.8 ppm; Tuesday residual 0.9 ppm; Wednesday residual 1.2 ppm; Thursday residual 0.9 ppm; Friday residual 1.0 ppm; Saturday residual 0.6 ppm; Sunday residual 0.7 ppm.

Solution*:*
Add the seven residual readings together:
0.8 ppm +0.9 ppm + 1.2 ppm + 0.9 ppm + 1.0 ppm + 0.6 ppm + 0.7 ppm = 6.1 ppm

Next, divide the total by the number in the series: 6.1 ppm /7 ppm = 0.87 ppm

10.3 Fractions

Owners/operators are often faced with routine situations that require working with fractions. One of the common uses for the rules governing the use of fractions, gallons per minute or gal/min and cubic feet per second or cfs is actually ft3/sec. As you can see, understanding fractions helps in solving other problems.

Fractions are used when you want to express a portion of the whole. The number 12 divided by 3 gives an exact quotient of 4 (12/3 = 4). But, if you try to divide 4 by 5, you will not get an exact **quotient**. The division may be written 4/5. This is read four-fifths. The bar or slash (/) in the fraction separates the two numbers and is read “divided by”.

Divided by means the top number (numerator) is divided by the bottom number (denominator). This means that another way to say 4/5 is to say 4 divided by 5. If you have a pizza that is cut into five pieces and you eat one, you

have eaten 1/5th of the pizza (1 divided by 5). If you eat two pieces, you have eaten 2/5th of the pizza (two divided by five). Since you took a part of the whole pizza, you took a fraction of it. Remember that a fraction consists of a numerator and a denominator. The two (2) is the numerator; the five (5) is the denominator. You might remember which is which by thinking 'd' stands for down.

10.3a Adding or Subtracting Fractions

Now that you understand the basics, try adding and subtracting fractions.

Problem:
Add 2/5 + 1/6:

Solution*:*
1. Find a common denominator. A common denominator is the smallest number that 5 and 6 will go into evenly. 30 will be the common denominator.
2. Convert the numerators and the denominators of the fractions. 5 times what number gives you 30? 5 times 6, so multiply the top by 6 also. This gives you 12/30. Do the same for the second fraction. 6 times what number gives you 30? 6 X 5 =30, so multiply 1 X 5. This gives us 5/30.
3. Add the numerators. 5 + 12 = 17. 17 is your new numerator.
4. Put your new numerator over your denominator; 17/30
5. Reduce when possible.

Problem*:*
Find 1/3 + 5/8

Solution*:*
1. Find a common denominator: (24).
2. Convert the numerators and the denominators of the fractions: (8/24)(15/24)
3. Add the numerators. 8 + 15 = 23. 23 is your new numerator.
4. Put your new numerator over your denominator; 23/24
5. The fraction cannot be reduced.

Problem*:*
Find 3/4 – 1/2

Solution*:*
1. Find a common denominator: (4).
2. Convert the numerators and the denominators of the fractions: (3/4)(2/4)
3. Subtract the numerators. 3 - 2 = 1. 1 is your new numerator.
4. Put your new numerator over your denominator; 1/4
5. The fraction cannot be reduced.

10.3b Multiplying Fractions

Problem:
Multiply 2/5 X 1/6:

Solution:
1. Multiply numerator by numerator. Multiply denominator by denominator.
2. 2 X 1 = 2; 5 X 6 = 30
3. Place the numerator over the denominator. 2/30
4. Reduce when possible.

You do not need common denominators here!

Problem*:*
Find 1/3 X 5/8

Solution*:*
1. Multiply numerator by numerator. Multiply denominator by denominator.
2. 1 X 5 = 5; 3 X 8 = 24
3. Place the numerator over the denominator. 5/24
4. The fraction cannot be reduced.

10.3c Dividing Fractions

Problem:
Divide 2/5 ÷ 1/6:

1. Change ÷ to x and flip the second fraction.
2. 2/5 x 6/1
3. Note that dividing by 1/6 is the same as multiplying by 6/1(the invert of 1/6).
4. Multiply as we discussed above. 2/30
5. Reduce when possible.

You do not need common denominators here!

Problem*:*
Find 1/3 ÷ 5/8

Solution*:*
1. Multiply numerator by numerator. Multiply denominator by denominator.
2. 1/3 x 8/5
3. Multiply 8/15
4. The fraction cannot be reduced.

10.4 Decimals

Another method of representing a fraction is by using decimals of tenths, hundredths, etc. This is a much better method to use with a calculator. If you have a fraction, and need to express the fraction as a decimal, you can convert the fraction to a decimal by dividing the numerator by the denominator. A decimal is composed of two sets of numbers. The numbers to the left of the decimal are whole numbers and numbers to the right of the decimal are parts of whole numbers, or a fraction of a whole number.

Whole number → 157.658 ←Fraction of a number

The term used to denote the fraction component is dependent on the number of characters to the right of the decimal. The first character after the decimal point is tenths; the second character is hundredths; the third is thousandths; the fourth is ten thousandths; and the fifth is hundred thousandths.

We can convert a fraction to a decimal by dividing the numerator by the denominator. Using a calculator to divide the fraction, simplifies the process. For example, to convert 3/4 to a decimal, we divide 3 by 4. Using a calculator, enter the following keystrokes:

3 ÷ 4 =

The display will show the answer, 0.75.

1	2	3	.	4	5	6
Hundreds	Tens	Ones	Decimal	Tenths	Hundredths	Thousandths

10.4a Subtracting Decimals

If a calculator is unavailable, some basic rules apply to solving decimal problems.

Problem:
Subtract 15.21 from 64.26

Solution:
Line up the numbers at their decimal points and subtract.

```
 64.26
 15.21
 49.05
```

Problem:
Subtract 15.602 from 165.900

Solution:
Line up the numbers at their decimal points and subtract.

```
165.900
 15.602
150.298
```

10.4b Adding Decimals

Problem:
Add 25.34 and 62.46

Solution:
Line up the numbers at their decimal points and add.

```
 62.46
+25.35
 87.81
```

Problem:
Add .721 and 409.731

Solution:
Line up the numbers at their decimal points and add.

$$\begin{array}{r} 409.731 \\ +\ \ 0.721 \\ \hline 410.452 \end{array}$$

10.4c Multiplying Decimals

When multiplying two or more numbers containing decimals, follow these basic rules:

- Multiply the numbers as whole numbers; do not worry about the decimals
- Write down the answer
- Count the total number of digits (numbers) to the right of the decimal in all numbers multiplied
- Place the decimal that many places from the right hand end of your answer

Problem:
Multiply 2.48 x 4.6

Solution:
248 x 46 = 11408 (multiplied as whole numbers)

A total of three digits fall to the right of the decimal point (2 for the number 2.*48* and 1 for the number 4.*6*)

Place the decimal point three places to the left from the right of the 8; (11.408)

Answer: 2.48 x 4.6 = 11.408

10.4d Dividing Decimals

To divide a number by a number containing a decimal, the divisor must be made into a whole number by moving the decimal point to the right until a whole number remains. Follow these basic rules:

- Count the number of places the decimal needed to be moved
- Move the decimal in the dividend by the same number of places

Problem:
Divide 288.8 by 21.6

Solution:
Divisor $\rightarrow$ 21.6 $\overline{)288.8}\leftarrow$ Dividend

Move the decimal in the divisor 1 place to the right changing the divisor to the whole number 216. Moving the dividend decimal 1 place to the right changes the dividend to the whole number 2888.

Note the sum of decimal places moved equals two. Place the decimal two places from the right of the 1; (13.37037). Answer rounded to two decimal places for convenience.

Divisor $\rightarrow$ 216 $\overline{)2888}$ $\leftarrow$ Dividend

Using a calculator, this problem would be set up as follows:

$$\frac{288.8}{21.6} = 13.37037$$

10.5 Rounding Numbers

Rounding is the process of taking a number and reducing the number to one with fewer digits. Digits are rounded for convenience, not accuracy. If you have a number like the decimal example above (13.37037) and you wanted to round to two significant digits, you look at the third number to the right of the decimal (13.37<u>0</u>37). If the number is greater than 5 raise the second digit up one, if the number is less than 5 leave the number as is. The solution to rounding the above number would be 13.37.

Most the time, rounding is use because it makes numbers easier to work with in your head. Rounding can get an answer that is close but that does not have to be exact. In general, round numbers by making numbers that end in 1 through 4 into the next lower number that ends in 0. For example, 63 rounded to the nearest ten would be 60.

Numbers that end in a digit of 5 or more should be rounded up to the next even ten. The number 88 rounded to the nearest ten would be 90. As a rule of thumb, if the number you are rounding is followed by 5, 6, 7, 8, or 9, round the number up. For example; 48 rounded to the nearest ten is 50. If the number you are rounding is followed by 0, 1, 2, 3, or 4, round the number down. For example; 43 rounded to the nearest ten is 40.

10.6 Powers

Powers are used, for example, to identify area in square feet (ft^2), and volume in cubic feet (ft^3). Powers indicate when a number should be squared, cubed, etc. The power of a number indicates the number of times a number must be multiplied by itself.

Rather than writing 5 x 5 x 5 x 5, it is convenient to use an exponent to indicate that the factor 5 is used as a factor four times. Specifically, when several numbers are multiplied together as above, 5 x 5 x 5 x 5 = 625, the 5s are the factors; 625 is the product. Since the factors are alike, the product is called a power. Thus, 625 is the power of 4, and 5 is the base of the power (5^4). A power is a product obtained by using a base a certain number of times as a factor.

The exponent is a small number placed above and to the right of the base number and indicates how many times the base is to be used as a factor. Using this system of notation, the multiplication 5 x 5 x 5 x 5 is written 5^4.

The 4 is the exponent showing the 5 is to be used as a factor four times.

Problem:
Rewrite 8 x 8 x 8 and calculate the product.

Solution:
$8 \times 8 \times 8 = 8^3 = 512$

Problem:
Rewrite 4 x 4 x 4 x 4 x 4 and calculate the product.

Solution:
$4 \times 4 \times 4 \times 4 \times 4 = 4^5 = 1024$

10.7 Ratios

This is a comparison of two numbers with the same units, such as 2 : 1. For instance, if the units are parts per million (ppm), this represents 2 parts per million parts.

10.8 Unit Conversions

Unit conversion represents a method of converting from one unit to another, such as cubic feet (ft^3) to gallons. Conversions are a process of changing the units of a number to make the number usable in a specific instance. Conversions are accomplished by multiplying or dividing into another number to change the units of the number. If the units are incorrect the number that you calculate is incorrect as well.

Most calculations used for water related problems have units connected with them. Unit conversions appear to be one of the most difficult tasks for water system operators. You must always write the units down with each number. The number tell us how many, the units tell us what we have. All units must be checked prior to your calculations to make sure your answer will be in correct units.

When converting one unit to another, the following method determines units (but it does not solve the equation):

- Write down the number and units you wish to convert from on the left
- Write down the unit you wish to convert to on the right
- Draw a line under both of these (this line means “divided by” and allows you to use a conversion factor)
- Below the division line (on the right) write down the same unit as you wrote on the left
- Write the appropriate conversion number associated with the two units on the right
- Cancel out the same units (this will leave you with the units you wish to convert to)
- Perform the appropriate multiplication and division

Example A:
200 cubic feet (ft^3) is how many gallons?

$$\frac{200\ (\cancel{ft^3}) \times 7.48 \text{ gallons}}{1\ (\cancel{ft^3})}$$

$$\frac{200\ (\cancel{ft^3}) \times 7.48 \text{ gallons}}{1\ (\cancel{ft^3})} = 1486 \text{ gals}$$

Example B:
How many gallons are contained in 2400 ft^3?

$$\frac{2400\ (\cancel{ft^3}) \times \text{gallons}}{1\ (\cancel{ft^3})}$$

$$\frac{2400\ (\cancel{ft^3}) \times 7.48 \text{ gallons}}{1\ (\cancel{ft^3})} = 17{,}952 \text{ gals}$$

Units must be the same to make calculations. For instance, when numbers are added or subtracted, the units must be the same. 6 *feet* + 6 *feet* = 12 *feet*

Now, add 4 feet + 6 yards. The answer cannot be determined unless yards are converted to feet or feet are converted to yards. Converting the larger units is easiest when possible, but the conversion may depend on the answer desired:

$$\frac{6\ \cancel{\text{yards}}\qquad \text{feet}}{1\ \cancel{\text{yard}}}$$

$$\frac{6\ \cancel{\text{yards}} \times 3 \text{ feet}}{1\ \cancel{\text{yard}}} = 18 \text{ feet}$$

Yards have now been converted to feet. Complete the problem: 4 feet + 18 feet = 22 feet

Refer to the formula sheet (Appendix 6) when the conversion factor is not known. Some operators probably memorize formulas because they use them daily. However, most water system operators have a formula sheet near by to look up conversion factors when needed. Caution: Most formulas require specific units. You may need to convert your units before plugging them into a formula.

Practice:
If your pressure tank holds 100 gallons of water, how many cubic feet $(ft)^3$ are contained in the tank? Ans. (13.4 ft^3)

10.9 Solving Word Problems

1. Read the problem
2. Circle what is being asked for, underline pertinent information, draw a picture and label with information given in the question
3. Stop and think about what the question asks for
4. Check the units; many times the units of the item being asked for will tell you how to do the problem
5. Do not proceed until you understand what is being asked and you know how to proceed
6. Select the proper formula from the formula sheet
7. Write down the formula
8. Plug numbers from the question into the formula; if you don't have enough numbers to plug into the formula or too many numbers for the formula,

you probably are trying to use the wrong formula
9. Solve the formula
10. Check if the answer is reasonable (makes sense). If not, go back and check your work and the formula you used.

10.10 Area

Area represents the surface of an object. Area of any figure is measured in the two dimensions or in square units. The units in the English system are usually square inches (in^2), square feet (ft^2), etc. Once again, remember units must be the same to solve math equations.

Area is found by multiplying two length measurements, so the result is square measurement.

(6 feet) x (6 feet) = 36 $feet^2$ or 36 square feet

10.10a Rectangle

The area of any rectangle is equal to the length multiplied by the width of the figure.

Example:
Find the area of a rectangle that has a length of 8 feet and width of 4.5 feet.

A = L x W
A = 8 ft x 4.5 ft
A = 36 ft^2

Remember: The units must be the same (both feet or both inches, etc.)

Practice:
1. What is the area of a sand filter 32 feet wide by 46 feet long? Ans. (1472 ft^2)
2. A sheet of wall paneling is 4 ft wide by 8 ft tall. How many square feet is a sheet of wall paneling? Ans. (32 ft^2)
3. You decide to panel a wall in your house. The wall measures 14 ft long and 8 ft high. How many square feet is the wall? Ans. (112 ft^2)

How many sheets of paneling do you need? Ans. (3.5 sheets)

10.10b Circle

The area of a circle is found in a different manner because a circle does not have a base and height measurements. A circle is defined as a figure that has an arc that is equidistant in all areas from a center point. A line drawn from the center point to any point on the arc is called the radius (r). A straight line drawn through the center from arc to arc is called the diameter (D) of the circle. The distance around the outside of the circle is called the circumference (C).

The area of a circle is found by squaring either the radius (multiplying it by itself) or squaring the diameter. By doing this operation the units will become squared and at that point the units are right for finding area.

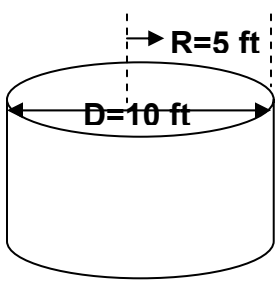

When making calculations involving circular objects, a special number is required, referred to as the Greek letter pi (pronounced pie), the symbol for pi is π. Pi (π) always has the value 3.1416 (many calculators include a button for π, since it is used so often). Pi is usually rounded to 3.14. The circular shape below shows the diameter and the radius.

Example:
What is the area in square feet of the circular shape above?

$A = \pi \times r^2$
$A = \pi \times 5 \text{ ft} \times 5 \text{ ft}$
$A = 3.14 \times 5 \text{ ft} \times 5 \text{ ft}$
$A = 78.5 \text{ ft}^2$

Or another formula used to compute the area of a circle is:

$A = \pi/4 \times D^2$
$A = \pi/4 = 3.14/4 = 0.785;$

therefore,

$A = 0.785 \times D^2$
$A = 0.785 \times 10 \text{ ft} \times 10 \text{ ft}$
$A = 78.5 \text{ ft}^2$

Practice:
1. What is the area in square feet of a circular tank with a diameter of 40 ft.? Ans. (1256 ft^2)
2. How many gallons of paint will be needed to paint the roof of a circular storage tank that is 20 feet in diameter? A gallon of paint covers 110 square feet. Ans. (2.85 gallons)

10.11 Volume

Operators are usually interested in how many gallons a container, tank, or pipe can hold. Volume is measured in the three dimensions where a depth or height of the figure is known. Units are generally cubic feet (ft^3), cubic inches (in^3), acre-feet and gallons. In the water field, the volumes of most tanks are measured in gallons.

10.11a Volume of a Rectangle

The volume of a rectangular object like a clear well is calculated by multiplying together the length, width, and the depth. To calculate volume, remember the length times the width is the surface area. Then, surface area is multiplied by the depth to find the volume.

Volume = L x W x H

L = Length
W = Width
H = Height (or) Depth

Example:
What is the volume in cubic ft (ft^3) of a tank 45 feet long, 20 feet wide and 10 feet deep?

Volume = L x W x H

= 45 ft x 20 ft x 10 ft
= 900 ft^2 x 10 ft
= 9000 ft^3

Most problems involving storage tanks require the volume of the tank be known in gallons rather than cubic feet. One of the most common conversions used in the water industry is converting cubic feet (ft^3) to gallons. One cubic foot (ft^3) will hold 7.48 gallons. To calculate gallons the tank above will hold:

Volume = L x W x H

= 45 ft x 20 ft x 10 ft
= 900 ft^2 x 10 ft
= 9000 ft^3

$$\frac{9000\ \cancel{ft^3} \times 7.48\ \text{gallons}}{\cancel{ft^3}} = 67,320\ \text{gals}$$

Practice:
What is the volume of a tank 50 feet long, 32 feet wide and 15 feet deep in gallons? Ans. (179,520 gallons)

A tank holds 240,000 gallons and is 160 feet long and is 35 feet wide. What is the depth of the tank in feet? Ans. (5.7 feet)

10.11b Volume of a Cylinder

The volume of a cylinder is equal to the surface area times the height of the cylinder. The volume of a cylindrical tank is calculated by multiplying the surface area times the height of the tank walls.

When working with the area of a circular shape, you must select one of two formulas for finding the surface area:

$$A = \pi \times r^2 \text{ OR } A = 0.785 \times D^2$$

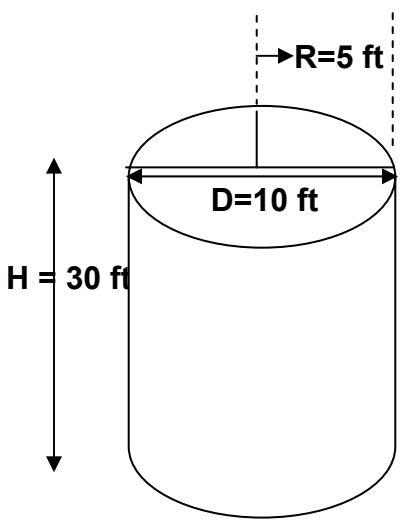

Example:
The tank above is 10 feet in diameter and 30 feet deep, how many gallons of water will it hold?

Calculate the surface area first, multiply by height, and then convert to gallons.

A $= \pi \times r^2$
$= 3.14 \times 5 \text{ ft} \times 5 \text{ ft}$
$= 78.5 \text{ ft}^2$
V $= A \times H$
$= 78.5 \text{ ft}^2 \times 30 \text{ ft}$
$= 2355 \text{ ft}^3$

$= 2355 \text{ ft}^3 \times 7.48 \text{ gal/ft}^3 = 17615.4$ gallons

or

A $= \pi/4 \times D^2$
$= 0.785 \times 10 \text{ ft} \times 10 \text{ ft}$
$= 78.5 \text{ ft}^2$
V $= A \times H$
$= 78.5 \text{ ft}^2 \times 30 \text{ ft}$
$= 2355 \text{ ft}^3$
$= 2355 \text{ ft}^3 \times 7.48 \text{ gal/ft}^3$

= 17615.4 gallons

Practice:
How many gallons will a tank that measures 60 feet in diameter and 40 feet deep hold? Ans. (845,539.2 gallons)

If a cylinder holds 40,000 gallons of liquid, what is the depth of the container when the radius is 12 feet? Ans. (11.8 feet)

Practice:
The static water level is measured to be 40 feet below ground level. The well casing is 6-inch diameter and 250 feet long. How many gallons of water are in the casing? Ans. (308 gallons)

Practice:
If a cylinder holds 40,000 gallons of liquid, what is the depth of the container when the radius is 12 feet? Ans. (11.8 feet)

10.12 Pressure

Pressure is expressed as pounds per square inch (psi), but it can be expressed as feet of head. Pressure in the water system makes the system work. It is caused by the weight of water above a given point in the system.

To convert from feet of head multiply the head times 0.433 psi/foot of head. When you know the pressure on a given point you can calculate the head in feet by multiplying the pressure times 2.31 feet/psi.

Example:
Find the pressure on a gauge when the water level above a point is 35 feet?

PSI = 35 feet x 0.433
= 15.2 psi

Find the feet of head when a pressure gauge reads 30 psi?

HEAD = 30 psi x 2.31 feet/psi
= 69.3 feet

Practice:
A pressure gauge at the base of a water tank reads 29 psi. What is the elevation of the water above the gauge? Ans. (67 feet)

A water tank is 35 feet high. If the tank is filled to the 30-foot level, what is the pressure at the base? Ans. (13 psi).

10.13 Dosage Calculations

An operator must understand the importance of calculating the amount of chemical that he/she adds to the water. Units are expressed as either parts per million (ppm) or milligrams per liter (mg/L). *Milligrams per liter and parts per million are considered to be equal (mg/L = ppm).*

A calculation using the pounds formula shows the number of pounds of chemical being added to the water per million pounds of water. The loadings are calculated by multiplying the following:

- The volume expressed in million gallons (MG)
- The weight of one gallon of water (8.34 lbs/gal)
- The amount of chemical added in parts per million

Pounds = Million gallons x 8.34 lbs/gal x parts per million, or

LBS = MGD x 8.34LBS/GAL x MG/L

Pounds of material is equal to the volume in million gallons a day in millions only, i.e. 4,000,000 (4 million) is entered into the formula as 4 (not 4,000,000 which would make it 4 million, million), times 8.34 (weight of one gallon of water) times the required concentration in mg/l (milligrams per liter). This formula finds the pounds when the chemical or material is 100% pure, when dealing with say 65% available chlorine than divide the answer in 100% pure by the % available

as a decimal, so for 650% divide the answer by 0.65, thus:

$$\text{LBS} = \frac{\text{MGD x 8.34LBS/GAL x MG/L}}{0.65}$$

Example:
How many pounds of chlorine must be added to 1.5 MG to obtain 2.5 ppm of chlorine residual?

lbs of chlorine = 1.5 MG x 8.34 lbs/gal x 2.5 ppm
= 12.51 M lbs/day x 2.5 ppm
= 31.3 lbs/Cl_2/day

Practice:
How many pounds of chlorine must be added to a 1.2 million-gallon tower to raise the residual 50-ppm? Ans. (500.4 lbs)

Note: If the gallons aren't in million gallons, divide the gallons by one million.

Example:
Change 6500 gallons into million gallons (MG).

6500 gallons/1,000,000 gallons = 0.006500 MG

Practice:
Change 750,000 gallons into million gallons. (Ans. 0.75 MG)

Remember, chlorine products used to disinfect may not be pure elemental chlorine (with the exception of liquid/chlorine gas), but contain some other chemical in combination with the one that your will use to disinfect. An example of this is sodium hypochlorite (HTH), which may be 65 percent available chlorine. In this case:

Lbs/day = pounds pure chemical/percent purity

Example:
How many pounds of HTH would be required to raise the chlorine residual to 50 ppm if a tank contains 0.5 MG? HTH is 65 percent pure.

$$\text{lbs HTH} = \frac{\text{MG x 8.34 lbs/gal x PPM}}{\text{Percent Purity}}$$

$$\frac{\text{0.5 MG x 8.34 lbs/gal x 50 PPM}}{0.65}$$

$$= \frac{\text{208.5 lbs.HTH}}{0.65}$$

= 320.8 lbs HTH

Example:
The static level of a well is measured to be 55 feet below ground level. While pumping, the level is lowered to 95 feet.

The flow meter indicates that 120 gpm is pumped. What is the specific capacity of the well?

Static Water Level (SWL) = 55 feet

Pumping Water Level (PWL) = 95 feet
95 feet – 55 feet = 40 feet draw down

$$\text{Specific Capacity (SC)} = \frac{\text{120 gpm}}{\text{40 feet}}$$

= 3 gpm/feet

Example:
The operation of a fluoridation system requires that the operator calculate several different things. One of the most common calculations is the amount of fluoride to add to the system in gallons.

One thing that you must know in order to complete this is the weight of one gallon of hydrofluosilicic acid, which is approximately 10.3 pounds per gallon (10.3#/gallon). This gallon of acid is also approximately 25 percent acid and 75 percent water. Also, the 25 percent acid is only 79 percent fluoride.

The following calculation shows how many pounds of pure fluoride are contained in one gallon of hydrofluosilicic acid.

Fluoride per gallon =
10.3 #/gal x .25 acid
2.57 # acid/gal

Pounds of fluoride/gal
2.57 # acid/gal x .79 fluoride/# = 2.03 #fluoride/gal

When you want to know how many gallons are required to raise the fluoride residual to a given level you must find the amount of pure chemical that is required and divide this by the amount of pure chemical per gallon of acid.

Example:
How many gallons of hydrofluosilicic acid are required to raise the fluoride residual to 1.2 ppm in 1.0 mgd. The weight of the fluoride is 10.3 pounds per gallon with and acid content of 25 percent and a 79% purity. Natural fluoride level is 0.

Pounds per gallon =
10.3 #/gal x .25 acid x .79 =
2.03 # acid/gal

Gallons fluoride =
mgd x ppm x 8.34lbs/gal
1.0 mgd x gal x l.2ppm 8.34 #/ =
10.01# fluoride/day

10.01#fl/day ÷ 2.03 #/gal = 4.92 gallons

Practice:
How many gallons of hydrofluosilicic acid is required to raise the fluoride residual to 1.3 ppm when the flow to the system is 150 gpm and it runs 24 hours? The hydrofluosilicic acid is 10.3 #/gallon and 25 percent acid and containing 79 percent fluoride.
(1.15 gallons)

If you are using sodium silica fluoride, which is a dry powder rather than a liquid the procedure is the same. First you find the amount of pure chemical needed and divide this by the amount of pure chemical per pound of chemical fed. Sodium silica fluoride is approximately 69 percent pure fluoride for each pound of chemical fed.

Example:
Find the amount of sodium silica fluoride that is required to raise the fluoride residual to 1.3 ppm with a flow of .5 mgd? The sodium silica fluoride is 69 per cent pure fluoride.

Pounds per day =
mgd x ppm x 8.34 #/gal
.5 x 1.3 x 8.34 = 5.42#/day

Percent pure = 69%

5.42 #/day/.69 = 7.85 #/day

10.14 Proportion Problems

How many gallons of a 15% solution are to be mixed with water to fill a 50 gallon barrel with 2% solution? Sounds complicated? Not really, if you follow some simple steps setting up a proportion problem.

The formula for solving proportion problems starts as follows: (Note: In math, this symbol is the proportion sign.)

Larger Value : Larger Value
Smaller Value : Smaller Value

Proportion problems deal with larger and smaller values of the same units, like percent (%), pounds (lbs.), work units, or gallons (gals.). One side of the proportion sign (:) must be the larger and smaller values of the same units and the other like units on the other side of the proportion sign (:). Remember our original question? How many gallons of a 15% solution are to be mixed with water to fill a 50-gallon barrel with 2% solution?

15%: 50 gal
2% "X" (the unknown value)

After substituting in the known values and using "X" for the unknown value, multiply the known larger value on one side of the proportion sign (:) by the known smaller value on the other side of the proportion sign (;). Then, divide that by the remaining known value (whether it's the larger or smaller value) to find the unknown value "X", thus

$X = \frac{50 \times 2}{15}$ or $X = \frac{100}{15}$

100 ÷ 15 = 6.66 or 62/3 gallons of the 15% solution are needed.

10.15 Detention Time

The detention time of a tank or piping system is the time that it would take to fill or empty the tank or pipe. Detention time is a theoretical time since it will not determine if the tank is short-circuiting or not. Detention time is found by calculating the volume of the vessel and dividing it by the flow to the vessel.

$$\text{Detention Time} = \frac{\text{Volume}}{\text{Flow}}$$

Example:
Find the detention time of a tank that measures 30 feet long 20 feet wide and 10 feet deep with a flow into the tank of 500 gpm?

First, calculate the volume of the tank:
30 ft x 20 ft x 10 ft x 7.48 gal/ft3 = 44,880 gallons

Second, divide the volume by the flow:
44,880 gallons/ 500 gpm = 89.7 min

Detention Time = 90 minutes (Rounded)

Practice:
Your hydropneumatic tank measures 5 feet in diameter and the water inside the tank is 4 feet deep, if the tank receives a flow of 15 gpm what is the detention time of the tank in minutes?

Detention time = 39 minutes (Rounded)

Glossary

A

Action level - The concentration of lead or copper in water that determines, in some cases, the treatment requirements for source water or corrosion control.
Acute - Pertaining to an intense effect of a chemical or infectious agent. Acute effects are generally closely associated with high doses of the causative agent. They are not necessarily confined to brief exposure to the agent.
Algae - Simple, aquatic plants. They contain chlorophyll and require sunlight. They vary from microscopic single cells organisms to giant seaweed. In drinking water sources, blooms of microscopic algae cause taste and odor problems.
Alkalinity - A measure of the capacity of a water to neutralize strong acids; in natural waters this capacity is usually attributed to bases such as bicarbonate (HCO_3^{-1}), carbonate (CO_3^{-2}), and hydroxide (OH^{-1}). Alkalinity is expressed in mg/L as Ca CO_3.
Ammeter - A test instrument for measuring electrical current in amps. Often part of an instrument, called a VOM (volt, ohm, amp meter), have capacity to measure, voltage, current, and resistance.
Ampere - The unit of measurement of electrical current.
Anaerobic - In reference to microorganisms, organisms that can grow in the absence of free oxygen. In reference to the environment, the condition in which free oxygen is absent.
Annular Space - The space between the outside of a well casing and the drilled hole.
Appurtenance - Machinery, appliances, structures and other parts of a main structure that are necessary to allow it to operate as intended, but not considered part of the main structure. Example: Valves are appurtenances of the distribution piping system.
Aquifers - Underground formations where groundwater exists in sufficient quantities to supply wells or springs. These saturated underground formations will yield water to a well or spring. The water in an aquifer is called groundwater and the two terms often are used interchangeably. A saturated formation that will not yield water in usable quantities is not considered an aquifer.
Artesian - Water held under pressure in porous rock or soil confined by impermeable geologic formations.
Aseptically - Performing an operation in a manner that is free from disease-causing organisms.

B

Backflow - An undesired, reversed flow of liquid into a piping system.
Backpressure - Backpressure occurs when normal flow in the distribution system is reversed due to an increase in the downstream pressure above the supply pressure.
Backsiphonage - Backsiphonage can occur when a negative pressure (below atmospheric pressure, or a vacuum) develops in the distribution system that can allow pollutants or contaminants to be siphoned into the water system.
BacT - Abbreviation for bacteriological, as in BacT sample (microbiological sample).

Bacteria - Microscopic unicellular organisms having a rigid cell wall. They lack a nuclear membrane, amitotic system and mitochondria. They posses a single chromosome and divide by binary fission. Most are nonphotosynthetic (except cyanobacteria, the group formerly referred to a bleu-green algae).
Boil Water Notice - A public notice issued by a public water system that advises users that their water is, or potentially is, unsafe microbiologically and that the water should be boiled before use. To kill waterborne pathogens, water at sea level should be brought to a rolling boil for 1 minute and then allowed to cool before consumption.
Bored Wells - A well that is excavated by means of an auger (hand or powered), as distinguished from dug, drilled or driven.
Borehole - A hole for well made by the boring excavation process.
Breakpoint - The point on a breakpoint curve (graphic representation of the relationship that exists as increasing amounts of chlorine are added to water containing ammonia-nitrogen and nitrogen-containing organics compounds) at which the chlorine dosage has satisfied the demand exerted by the ammonia nitrogen and nitrogen-containing organic compounds and beyond which addition chlorine is measured as free, rather than combined, residual.

C

Capacitor - An electrical device consisting of two conductive plates separated by a non-conductor used to store an electrical charge (capacitance).
Carcinogenic - Having the capacity to induce cancer.
Chlorination - An oxidation process initiated through the addition of chlorine. In chlorination, oxidation oxidizes microbiological material, organic compounds and inorganic compounds. Chlorination is the principal form of disinfection of water supplies in the U.S.
Chlorine Demand - The quantity of chlorine consumed in a specified time period by the oxidative reaction with microbiological material, organic compounds and inorganic compounds.
Chlorine Residual - The concentration of chlorine compounds present in water after the oxidation (chlorine) demand has been satisfied. Chlorine residual is expressed in terms of free chlorine residual, combined chlorine residual, and total chlorine residual.
Chronic - Pertaining to symptoms that continue for a long time as a result of a single exposure or repeated exposure over a long period of time.
Class A System - In the system used in Alaska to classify public water systems; those public water systems that are expected to serve year-round at least 25 individuals, 15 residential service connections, or that regularly serve the same 25 or more persons for at least six months of the year.
Class B System - In the system used in Alaska to classify public water systems; those public water systems that are expected to serve, in the normal course of events, at least 25 persons each day or 10 service connections for at least 60 days of the year and is not otherwise a Class A system.
Class C System - In the system used in Alaska to classify public water systems; those public water systems that are neither Class A or Class B, but still qualify as a public water system.

Close-Coupled - In reference to pump configuration, where the pump is connected directly to its power source by a common shaft without any reduction gearing or shafting.
Colloid - A small, discrete solid particle in water that is suspended (not dissolved) and will not settle by gravity; usually considered to be less that one micrometer in diameter.
Color - A physical characteristics describing the appearance of water (different from turbidity, which is the cloudiness of water).
Colorimeter - A device used to measure the absorption of light at a specific wavelength.
Combined Chlorine Residual - Chlorine residual resulting from the sum of the residual chlorine that is combined with ammonia and organic nitrogen.
Comparator - In reference to chemical analysis, a device to determine the intensity of color that has developed as part of a colorimetric chemical analysis. The color intensity is compared visually to a set of color standards. The intensity of the color is proportional to the concentration of the material being analyzed. Typically used by operators to determine chlorine residual concentration.
Concentration, C. - In reference to the product C x T (concentration times time), used to evaluate microorganism inactivation by a disinfectant, “C” is the concentration of the disinfectant expressed in mg/L.
Conductivity - A measure of the ability of a solution to conduct electrical current. Its value is commonly used to estimate the total dissolved solids concentration of the solution.
Conductor - A substance that permits the flow of electricity.
Cone of Depression - A depression in the water table around a well or group of wells in response to groundwater withdrawal.
Confined Aquifer - Bounded on the top by materials (clay, shale, etc.) through which water moves very slowly. Groundwater in a confined aquifer is under pressure and rises in a well above the top of the aquifer.
Confined Space - A space that is configured so that an employee can bodily enter and perform assigned work but that has limited or restricted means of entry and exit and is not designed for continuous employee occupancy. A legal definition related to OSHA’s requirements for certain specific restrictions and employee training.
Consumer Confidence Reports (CCR) - An annual report to consumers of each Class A community public water supply system on the source of their water and the levels of contaminants found in the drinking water.
Contact Time, T. - In reference to the product C x T (concentration times time), used to evaluate microorganism inactivation by a disinfectant, “T” is the time, in minutes, that the disinfectant is in contact with the water being disinfected.
Corrosion - The gradual deterioration of a substance (usually a metal) as a result of a reaction with its surroundings.
Corrosivity - An indication of the corrosiveness of a water. Often expressed by the Langelier Saturation Index.
Cross-connection - A physical arrangement by which a public water system is connected, directly or indirectly, with an unapproved water system, sewer, drain, conduit, pool, storage reservoir, plumbing fixture, or other device that contains, or might contain, wastewater or other substances of unknown or unsafe quality that might be

capable of contaminating the water supply through backflow; "cross-connection" includes a bypass arrangement, jumper connection, removable section, swivel or change-over device, and other temporary, permanent, or potential connection through which, or because of which, backflow or back-pressure could occur.
Current - The speed of electrical charge movement or the "flow rate" of electricity, measured in amperes.
Cycle - In reference to alternating current (AC) electrical systems, one complete change in direction of current flow.

D

Decommissioned - In reference to wells, a decommissioned is a well that has been abandoned and sealed according to specific standard procedures.
Discharge Pipe - The piping system through which water flows from the outlet side of a pump, pump station, or reservoir.
Disinfection - The process designed to inactivate most microorganisms in water, including all pathogenic bacteria and viruses.
Disinfection/Disinfection By-Product (D/DBP) - A group of disinfectants and the chemical by-products resulting from the application of those disinfectants and regulated as a primary drinking water regulation.
Disinfection By-Products (DBPs) - A chemical by -product of the disinfection process. DBPs are formed by the reaction of the disinfectant, natural organic matter and the bromide ion (Br^{-1}).
Drainage Basin - Also called a watershed. The land area, usually expressed in square miles, from which water flows in to a stream or river above a specified point.
Drilled Well - A well that is excavated by cable tool or rotary method, as distinguished from dug, bored or driven.
Drinking Water Protection Program (DWPP) - An Alaskan program intended to help protect the water sources of public water systems.
Driven Wells - A well that is constructed by driving a series of pipes into unconsolidated material to water-bearing stratum, as distinguished from bored dug, or drilled.
Dug Well - A shallow, large-diameter well that is excavated by hand or with power machinery, as distinguished from bored, drilled or driven.

E

Evaporation - A process in which a liquid is changed to a gaseous state by volatilization at a set temperature and pressure.
Exercised - In reference to water system valves, the process of opening and closing the value to insure that the mechanism operates smoothly.

F

Fecal Coliform – Members of the total coliform group of bacteria that area characterized by their ability to ferment lactose at 112.1^{o} F (44.5^{o} C). Fecal coliform provide stronger evidence of the possible presence of pathogens than do total coliform. This group indicates the presence of fecal matter, which could be of human or animal

origin since fecal coliforms come from the intestines of all warm-blooded animals. Fecal coliforms do not include coliforms found naturally in the soil and on vegetation. *Eschericia coli (E. coli)* are fecal coliforms from humans.
Filtration - In reference to water treatment, the removal of suspended material from the water by passage through a filtering medium, such as sand.
Finished Water - Water that has passes through a water system plant, such that all the treatment process are completed or finished and the water is ready for delivery to consumers.
Free Chlorine Residual - Chlorine residual resulting from the sum of gaseous chlorine (Cl_2), Hypochlorous acid (HOCl), and Hypochlorite ion (OCl^{-1}).

G

Groundwater - Water that occupies voids, cracks or other pore spaces in clay, silt, sand, gravel, or rock beneath the surface of the earth.
Grouting - The placement of grout in the subsurface by drilling and injection to prevent the movement of groundwater along the outside of a well casing.

H

Haloacetic Acids (HAAs) - A class of disinfectant by-products formed primarily during the chlorination of water containing natural organic matter and bromide ions. Chemical compounds resembling acetic acid where halogens (chlorine and/or bromine) replace one or more hydrogen atoms.
Hardness - A quality of water caused by divalent cations (Ca^{+2} and Mg^{+2}) and resulting in increased consumption of soaps and detergents, hindrance to some industrial processes and sometimes, taste and odor problems.
Hazard - In reference to a chemical hazard, the chemicals capacity to do harm by virtue of its toxicity, flammability, explosiveness or corrosiveness.
Horsepower - A measurement of work. One foot-pound of work is the amount of energy required to lift one pound of water one foot in elevation. In pumping situations the amount of work done will be in the thousands of foot-pounds. Because we do not like to use large numbers we have defined another term for work. When 33,000 foot-pounds of work is performed in one minute we call it one horsepower.
Hydrologic Cycle - Describes the constant movement of water above, on, or below the earth's surface. Water changes states between liquid, solid, and gas during the cycle. Condensation, evaporation, and freezing of water occur in the cycle in response to the earth and its climactic conditions.
Hydrological Event - The occurrence of any form of precipitation; rain, snow, sleet or hail.
Hydropneumatic - In reference to water storage tanks, pressurized tanks containing water and an air cushion that maintains system water pressure within a pre-determined range.
Hypochlorinator - A chemical feed system used to feed hypochlorite solutions into a water system. Usually consists of a chemical tank, positive displacement chemical feed pump and associated control components.

Hypochlorite - A shortened name for the hypochlorite ion (OCl^{-1}), derived from sodium hypochlorite (NaOCl) or calcium hypochlorite [$Ca(OCl)_2$]. The hypochlorite ion, part of free chlorine residual, has oxidizing (disinfecting) capacity.
Hypochlorous Acid (HOCl) - An acid used as a disinfectant. Formed from the reaction of chlorine gas or hypochlorites with water.

I

Impeller - A rotating device in a pump for forcing water in a given direction under pressure.
Impoundment - A pond, lake, tank, basin, reservoir or other space, either natural or artificial, used to store, regulate and control the flow of water.
Indicators - Bacteria that serve as a surrogate indicator for the potential presence of pathogens in drinking water.
Indicator Organism - An organism that can be detected with relative ease and specificity and whose presence or absence has been shown to be correlated with a specific condition of interest. In reference to drinking water quality the coliform bacteria are used as indicators of the potential presence of enteric pathogenic microbes.
Infectious Disease - A clinically apparent disease resulting from an infectious agent such as a pathogenic bacteria, protozoa, or virus.
Infiltration - the flow or movement downward through the soil.
Insulator - Any material that resists the flow of electricity and can be forced to carry electricity only by the application of very string electrical force.
Intake Structure - The works or structure at the head of a conduit into which water is diverted, usually referring to the structure designed to divert untreated, raw water into system for treatment and distribution.
Iron Bacteria - Microorganisms that metabolize iron. This specialized group of bacteria is capable of using iron for metabolic processes and commonly causes red-water, slime, or encrustation in well water systems.

K

Kilowatt-hour (Kw-h) - A unit of energy or work. The electrical work is a combination of watts (electrical power) used over a period of times (hours).

L

Lineshaft Turbine - A vertical turbine pump used in wells in which the submerged pump bowls are connected to the above ground motor by a vertically oriented drive shaft.
Lockout/Tagout - The safety procedure whereby the power source for electrical equipment and machinery is isolated, de-energized, locked and labeled to avoid accidental startup of equipment and machinery.
Long Term 1 (LT1) Enhanced Surface Water Treatment Rule - Federal regulation that applies to surface water systems and groundwater under the influence of surface water serving fewer that 10,000 people intended to maintain microbial protection.

Generally parallels the Interim Enhanced Surface Water Treatment Rule that has applied only to larger systems.

M

Material Safety Data Sheets (MSDS) - Information on the use, handling, and storage of specific chemicals or products.
Maximum Contaminant Level - The maximum permissible level of a contaminant in a public water supply system.
Micron - A unit of length equal to one millionth (10^{-6}) of a meter.
Microorganism - An animal or plant of microscopic size that includes bacteria, viruses, and protozoa.

O

Ohmmeter - A test instrument that measures the resistance of a conductor in Ohms.
Ohm - A unit of electrical resistance equal to that of a conductor in which a current of one ampere is produced by a potential of one volt across its terminals.
Organic Material - Material originating from living matter; chemical substances containing the element carbon.
OSHA Standards - Safety and health standards established by the federal Occupational Safety and Health Administration.
Oxidize - A chemical reaction that alters the structure, characteristics, and properties of the reactants. Oxidized substances loss electrons to the oxidizing agent. Example: Chlorine oxidized soluble ferrous iron to insoluble ferric iron, the ferrous iron losing an electron to the chlorine.

P

Palatable - In reference to drinking water, water that is agreeable or pleasant, especially to the sense of taste.
Parameter - A water quality attribute. Examples: the presence of certain bacteria, the hardness and the level of sodium are all parameters.
Pathogen - An organism that is capable of causing disease.
Pathogenic Organisms - An organism that can cause a disease in a host.
Permafrost – Ground that is below freezing for 2 or more years.
Personal Protective Equipment (PPE) - Equipment such as hard hats, gloves, goggles, and steel-toed shoes used by workers to prevent potential injuries from workplace hazards.
Percolate - The flow or movement of water through a porous medium such as an aquifer.
pH - The power of Hydrogen. The numerical measure of hydrogen ion activity with a scale of 0 -14. Neutral is pH 7; values below 7 are acid, and values above 7 are alkaline (basic).
Pitless Adapter - A tube with a waterproof cap that is attached to a well casing below the frost line to protect the well discharge pipe and pump from freezing.

Primacy - Primary enforcement authority granted to states for implementation and enforcement of federal regulations.
Primary Standard - Designed to protect public health by setting maximum permissible levels of potentially harmful substances in the drinking water. An enforceable drinking water standard.
Prime - To prepare for operation by or pouring water into a pump.
Potable - Safely drinkable.
Precipitate - In reference to the chemical process, material in solution that converts to an insoluble form and will settle out and/or can be remove by filtration.
Protozoa - Small, one-celled organisms, including amoeba, ciliates, and flagellates.
Public Water System (PWS) - A system for conveying drinking water to the public that serves at least 15 service connections or regularly serves at least 25 individuals daily at least 60 days out of the year.

R

Radioactive - Material capable of giving off radiant energy in the form of particles or rays (alpha, beta and gamma radiation).
Raw Water - Water from the supply source prior to treatment.
Recharge Area - The land surface through which water percolates downward as a renew source for groundwater in aquifers.
Repeat Sample - A sample taken to confirm the presence of a contaminant that was detected in a previous sample.
Replacement Sample - A sample used to replace an original sample that may have been damaged in transit or cannot be analyzed by the lab.
Resistance - A measure of a material's ability to impede the flow of electricity. Resistance is measured in ohms.
Risk - The probability that a particular adverse event will occur.
Routine Sample - A sample taken at regular intervals to determine compliance with maximum contaminant levels.

S

Safe Drinking Water Act - *The Safe Drinking Water Act* (SDWA) was enacted by Congress in 1974 and amended several times since then, establishes minimum drinking water standards in the United States.
Sample site plan - Bacteriological sample collection location plans required of all community public water supply systems identifying locations for routine monitoring and repeat monitoring.
Sanitary Seal - In reference to a well, the device that provides a protective seal between the inside of the well casing and the external environment.
Saturator - A piece of equipment that feeds a sodium fluoride solution into water for fluoridation.
Secondary Maximum Contaminant Level (SMCL) - A non-enforceable numerical limit set by the USEPA on the basis of aesthetic effects to prevent undesirable taste, odor, or appearance.

Secondary Standard - A non-enforceable regulation set by the USEPA on the basis of aesthetic effects to prevent undesirable taste, odor, or appearance.
Sequester - To keep a substance in solution through the addition of a chemical agent that forms chemical complexes with the substance. Example: Sodium hexametaphosphate is used to sequester iron.
Sodium Hypochlorite - One of several liquid forms of chlorine commonly used to disinfect public water supply systems. Sodium hypochlorite is usually available in 5%, 12%, and 35% chlorine solution.
Softening - The removal of calcium and magnesium ions, which are the principal causes of hardness in water.
Specific Capacity - A measurement of well yield per unit length of drawdown.
Spring - A concentrated discharge of groundwater appearing at the ground surface as a current of flowing water; usually occurs where a water-bearing strata (aquifer) intersects with the earth's surface.
Static Water Level - The level where water stands when the well is not being pumped. It is generally expressed as the distance in feet from the top of the well casing down to the water level in the well.
Submersible Pump - A pump designed to fit inside the well casing and to operate below the water level. A sealed electrical motor is mounted below the pump impeller stages.
Surface Water - All water on the surface (lakes, ponds, streams, rivers, etc.) as distinguished from subsurface or groundwater.
Surface Water Treatment Rule (SWTR) - Name for the USEPA regulation established in 1989 that sets maximum contaminant level goals for *Giardia lamblia,* viruses as well as other regulations for public water systems using surface water sources or surface water under the direct influence of surface water. Includes requirements for filtration and disinfection.
Synthetic Organic Chemicals (SOCs) - An organic chemical that is commercially made, some of which are regulated contaminants in drinking water.

T

Top terminal Height - The casing head must extend twelve inches above the finished ground surface or pump house floor, and twelve inches minimum above the local surface runoff level.
Total Chlorine Residual - The sum of free and combined chlorine residuals.
Total Coliform Bacteria - A group of indicator bacteria used to detect the possible contamination of water by pathogenic organisms.
Total Coliform Rule (TCR) - A USEPA rule regulating total coliforms, fecal coliforms and *Escherichia coli*.
Total Dissolved Solids (TDS) - The weight per unit volume (usually mg/L) of solids remaining after a sample has been filtered to remove suspended and colloidal solids.
Toxicology - The study of the quantitative effects of chemicals on biological tissue.
Treatment Technique Requirements (TTRs) - A requirement of specific regulations that specifies, for a specific contaminant, one or more treatment techniques that lead to a reduction of that contaminant sufficient to achieve compliance.

Trihalomethanes (THMs) - A group of organic compounds that are derivatives of methane in which three atoms of a halogen (chlorine, bromine, iodine) are substitutes for hydrogen atoms on the methane molecule; THMs are formed during chlorination and are regulated because of their potential carcinogenicity.
Turbidimeter - An instrument that measures the amount of light scattered by suspended particles in a water sample.
Turbidity - The cloudy appearance of water caused by the presence of suspended and colloidal matter.

U

Unconfined aquifer - The uppermost aquifer located immediately beneath the unsaturated zone. Groundwater in this aquifer is not pressurized. Because the unconfined aquifer is nearest to the surface, it is generally more susceptible to contamination than a confined aquifer.

V

Viruses - Pathogens responsible for many human diseases such as viral gastroenteritis, smallpox, poliomyelitis (polio) and infectious hepatitis. They are intracellular parasitic particles considered to be the smallest living infectious materials known.
Volatile - Capable of turning to vapor (evaporating).
Volatile Organic Compounds (VOCs) - Organic chemicals capable of turning to a vapor; some of which are regulated contaminants in drinking water.
Voltage - The electrical pressure available to cause the flow of current when an electrical circuit is closed.
Voltmeter - An instrument used to measure the potential difference, in volts, between two points. Often part of an instrument, called a VOM (volt, ohm, amp meter), have capacity to measure, voltage, current, and resistance.
Volt - Unit of measurement of electromotive force.

W

Water Hammer - Opening or closing a valve rapidly may cause a quick rise and fall of water pressure throughout the distribution piping system. The sound, like someone hammering on the pipe, occurs because the pressure in the pipe will increase and decrease back and forth very quickly.
Water Table - The level in the geologic formation below which all voids or cracks are saturated. The water table also can be thought of as the upper surface of the groundwater and top of the saturated zone for an unconfined aquifer.
Waterborne Disease - A disease transmitted through the ingestion of contaminated water.
Waterlogged - Saturated with water. In reference to hydropneumatic tanks, when the air cushion is replaced by water and the normal pressure cycle is disrupted.
Watershed - The land area, usually expressed in square miles, from which water flows in to a stream or river above a specified point. Also see discharge area.

Watts (W) - The unit of electrical power.
Well Capacity (yield) - The volume of water per unit of time discharged from the well usually recorded as gallons per minute (gpm) or gallons per day (gpd).
Well Casing - A non-perforated riser pipe connecting the well intake in the aquifer to the surface.
Well Development - Involves vigorously pumping the well to help clean out drill cuttings and to maximize production of the well. Development should result in a well that produces sand-free water when operated properly.
Well Log - A written report produced by the well driller that includes a description of the material (soil, rock, or ice) that was encountered during drilling, the depths at which they occurred, the depth to groundwater, and the well depth.
Well Yield - The quantity of water produced by a well, expressed in flow rate.

Z

Zeolite - Any of a group of hydrated sodium alumina silicates, either naturally occurring or synthetically produced, with ion exchange properties.
Zone Of Influence - The area around a well that experience a measurable drawdown during pumping of the well.
Zone Of Saturation - That part of an aquifer that has all of the available pore spaces filled with water.

Appendix 1 - Certified Laboratories

Laboratories Certified for MICROBIOLOGY Testing of Drinking Water

LABORATORY	CONTACT	APPROVED METHODS OF ANALYSIS
Adak Drinking Water Laboratory PO Box 1221 Adak AK 99545 (*Provisional)	Telephone: (907) 592-4347 Fax: (907) 592-4346	MF
AK Department of Environmental Conservation Environmental Health Laboratory 500 S Alaska St Palmer AK 99645	Telephone: (907) 745-3236 Fax: (907) 745-8125	C/F, FT. P/A, MF
Analytica Alaska 5438 Shaune Dr Juneau AK 99801	Telephone: (907) 780-6668 Fax: (907) 780-6670	MF, FT, C/F
Anchorage Water & Wastewater Utility Point Woronzof Laboratory 3000 Arctic Blvd Anchorage AK 99503-3898	Telephone: (907) 266-5217 Fax: (907) 248-6836	MF, FT
B&D Water Laboratory PO Box 611 Ward Cove AK 99928	Telephone: (907) 247-2368 Fax: (907) 247-7797	MF, FT
BP Exploration BPU/Production Lab PO Box 196612 Anchorage AK 99519-6612	Telephone: (907) 659-4356 Fax: (907) 659-4313	MF, C/F
Bristol Bay Area Health Corporation Kankananak Hospital PO Box 130 Dillingham AK 99576	Telephone: (907) 842-3396 Fax: (907) 842-3406	P/A, C/F
Central Alaska Engineering 32266 E Lakefront Soldotna AK 99669	Telephone: (907) 260-5311 Fax: (907) 260-5312	C/F

Chemical Testing and Engineering CT&E, Environmental Services, Inc. 200 W Potter Dr Anchorage AK 99518-1605	Telephone (907) 562-2343 Fax: (907) 561-5301	MF, C/F
City & Borough of Sitka Water/ Wastewater Plant 416 Galena Dr Sitka AK 99835	Telephone: (907) 966-2256 Fax: (907) 966-2257	MF
City of Kodiak Wastewater Treatment Plant 2853 Spruce Cape Rd Kodiak AK 99615	Telephone: (907) 486-8076 Fax: (907) 248-6836	MF, C/F
City of Valdez Valdez Wastewater Treatment Plant Laboratory PO Box 307 Valdez AK 99686	Telephone: (907) 835-4888 Fax: (907) 835-2992	MF
Cordova Wastewater Plant Laboratory PO Box 1210 Cordova AK 99574	Telephone: (907) 424-6338 Fax: (907) 424-6000	MF
Denali National Park Service Water Laboratory PO Box 9 Denali National Park AK 99755	Telephone: (907) 683-2294 Fax: (907) 683-9612	MF, C/F
Erdman & Associates Engineering/Water Testing 5200 Dunbar Dr Wasilla AK 99654	Telephone: (907) 376-6989 Fax: (907) 373-2157	C/F
Golden Heart Utilities Water Quality Laboratory 1304 First Ave Fairbanks AK 99701	Telephone: (907) 455-4401 Fax: (907) 455-4407	MF, C/F
King Salmon Wastewater Facility PO Box 189 Naknek AK 99633 (*Provisional)	Telephone: (907) 246-3664	MF
Maniilaq Association Maniilaq Health Center PO Box 43 5th & Grizzly Way Kotzebue AK 99752	Telephone: (907) 442-7171 1 (800) 478-3321 ext. 7171 Fax: (907) 442-7287	C/F

Mat-Su Test Lab of Alaska PO Box 2749 Palmer AK 99645	Telephone: (907) 745-3005 Fax: (907) 745-3010	C/F, MF
North Slope Borough/DHSS Public Health Office PO Box 925 Barrow AK 99723	Telephone: (907) 852-0277 Fax: (907) 852-0477	FT
Northern Test Lab 25186 Kenai Spur Hwy Soldotna AK 99669	Telephone: (907) 262-4624 Fax: (907) 262-5777	MF, C/F
Northern Testing Laboratories, Inc. 8005 Schoon St Anchorage AK 99518 3330 Industrial Ave Fairbanks AK 99701	Telephone: (907) 349-1000 Fax: (907) 349-1016 Telephone: (907) 456-3116 Fax: (907) 456-3125	MF, FT, C/F MF, C/F
Norton Sound Health Corporation PO Box 966 Nome AK 99762	Telephone: (907) 443-3216 Fax: (9070 443-2520	C/F
Petersburg General Hospital Microbiology Laboratory PO Box 589 Petersburg AK 99833	Telephone: (907) 772-4291 Fax: (907) 772-9271	FT, MF
R&M Engineering Ketchikan Inc. 355 Carlanna Lake Rd Ketchikan AK 99901	Telephone: (907) 225-7917 Fax: (907) 225-3441	MF
Surefish Laboratory PO Box 447 Dutch Harbor AK 99692	Telephone: (907) 581-4904 Fax: (907) 581-3459	FT, P/A, MF C/F
US Coast Guard WWTP Integrated Support Command Kodiak PO Box 1367 Kodiak AK 99615	Telephone: (907) 487-5728 Fax: (907) 487-2533	MF, C/F
USAF Bioenvironmental Engineering Laboratory 354 MEDS/SGPB 3349 Central Ave Ste 1 Eielson AFB AK 99702-2325	Telephone: (907) 377-5225 Fax: (907) 377-2233	C/F

Western Geophysical PO Box 243085 Anchorage AK 99524	Telephone: (907) 550-3511 1 (888) 254-5784	C/F
Wrangell General Hospital PO Box 1081 Wrangell AK 99929	Telephone: (907) 874-7126 Fax: (907) 874-7118	MF, C/F
Yukon Kuskokwim Health Corporation Environmental Health & Engineering PO Box 287-MSC-3021 Bethel AK 99559	Telephone: (907) 543-6420 Fax: (907) 543-6425	MF, C/F

Laboratories in **bold text** do not accept samples from the public.
* If the laboratory is not fully certified, the lab status is listed in parenthesis.

C/F = Chromogenic/Fluorogenic
FT = Multiple Tube Fermentation, Single Vessel Fermentation
MF = Membrane Filter
P/A = Presence/Absence Coliform Test

This table was adapted from ADEC's laboratories certified to test drinking water samples at:
http://www.state.ak.us/local/akpages/ENV.CONSERV/deh/water/laboratories.htm

Laboratories Certified for CHEMICAL Testing of Drinking Water

LABORATORY	CONTACT	EXPIRATION DATE
Alta Analytical Inc. 5070 Robert J. Mathews Parkway El Dorado Hills CA 95762	Telephone: (916) 933-1640 Fax: (916) 933-0940	August 19, 2001
Analytical Alaska – SE 5438 Shaune Dr. Juneau AK 99801	Telephone: (907) 780-6668 Fax: (907) 780-6670	November 3, 2001
Analytical Laboratory & Consultants 361 West Fifth Eugene OR 97401	Telephone: (541) 485-8404 Fax: (541) 484-5995	February 2, 2001
Anchorage Water and Wastewater Utilities 3000 Arctic Blvd Anchorage AK 99503	Telephone: (907) 266-5217 Fax: (907) 248-6836	October 24, 2001
Columbia Analytical Services Inc. 1317 South 13th Ave Kelso WA 98626	Telephone: (360) 577-7222 Fax: (360) 636-1068	May 30, 2001
CT & E Environmental Services Inc. 200 W Potter Anchorage AK 99518-1605	Telephone: (907) 562-2343 Fax: (907) 561-5301	November 4, 2001
IERA/SDC – Brooks AFB 2402 E Drive Brooks AFB San Antonio TX 78235-5114	Telephone: (210) 536-5865 Fax: (210) 536-9043	February 17, 2001
Montgomery Laboratories – Pasadena 555 E Walnut St Pasadena CA 91101	Telephone: (818) 568-6400 Fax: (818) 568-6324	November 21, 2001
North Creek Analytical 9405 SW Nimbus Ave Beaverton OR 97008-7132	Telephone: (503) 906-9200 Fax: (503) 906-9210	November 2, 2001
Northern Test Lab 35186 Kenai Spur Hwy Soldotna AK 99669	Telephone: (907) 262-4624 Fax: (907) 262-5777	July 8, 2001
Northern Testing Laboratories 8005 Schoon St Anchorage AK 99518	Telephone: (907) 349-1000 Fax: (907) 349-1016	August 22, 2001

Northern Testing Laboratories 3330 Industrial Ave Fairbanks AK 99701	Telephone: (907) 456-3116 Fax: (907) 456-3125	August 22, 2001
State Chemistry Laboratory 10107 Bentwood Place Juneau AK 99801-8552	Telephone: (907) 790-2169 Fax: (907) 790-2451	July 25, 2001
Umpqua Research Company PO Box 609 Myrtle Creek OR 97457	Telephone: (541) 863-5201 Fax: (541) 863-6199	February 14, 2001
US Army Center for Health Promotion and Preventive Medicine APG Aberdeen MD 21010-5422	Telephone: (410) 671-4465	July 1, 2001

Contact the laboratory for certified drinking water parameters

This table was adapted from ADEC's laboratories certified to test drinking water samples at:
http://www.state.ak.us/local/akpages/ENV.CONSERV/deh/water/laboratories.htm

Appendix 2 - Water Well Log Example

City/Borough:	Subdivision:	BLOCK	LOT	Property Owner Name & Address:

Meridian _____ Township _____ Range _____ Section _____ _____ ¼ of _____ ¼ of _____ ¼ of _____ ¼

BOREHOLE DATA: (from ground surface) **Material: Type, color & wetness**	Depth **From**	**To**	**Drilling method: ( ) Air rotary, ( ) Cable tool, Other _____** Well use: ( ) Public supply, ( ) Domestic, Other _____
			Depth of hole: _____ ft, Casing stickup: _____ ft Casing type: _____ Thickness: _____ inches
			Casing diameter: _____ inches Casing depth: _____ ft Liner type: _____ Diameter: _____ inches Depth: _____ ft
			Static water (from top of casing): _____ ft on ____/____/_____ Pumping level & yield: _____feet after _____ hours at _____ gpm
			Recovery rate: _____gpm, Method of testing: _____ Development method: _____ Duration: _____
			Well intake opening type: ( ) Open end, ( ) Open hole, Other _____ Screen: Start: _____ ft, Stopped: _____ ft
			Screen type: _____ Slot/mesh size: _____ Perforated: Start: _____ ft, Stopped: _____ ft
			Start: _____ ft, Stopped; _____ ft Note: _____
			Grout type: _____ Volume: _____ Depth; from _____ ft, to _____ ft
			Pump intake depth: _____ ft Pump size: _____ hp, Brand name: _____
			Was well disinfected upon completion? ( ) Yes, ( ) No Method of disinfection: _____
			Driller comments/disclaimers: _____
			_____ _____ _____
			Well driller name: _____ Company name: _____
			Mailing address: _____ City: _____State: AK Zip:_____
			Phone number: (_____)_____ - _____ Drillers signature:

Alaska state law requires that a copy of this well log be sent to the Department of Natural Resources within 45 days: faxes are acceptable. (AK statues 38.05.020, 38.05.035, 41.08.020, 46.15.020 and AK regulations 11 AAC 93.140).
DNR/ Division of Mining, Land and Water,
550 W 7th Avenue, Suite 900A
Anchorage, AK 99501-3577
Phone (907)269-8639 and fax (907)269-8947

Within the City of Anchorage, it is **required** that a copy of the well log be sent to the appropriate city office within 60 days and that another copy of the well log be sent to the well/property owner within 30 days.
Permit Number: _____
Date of Issue: _____/_____/_____
Parcel Identification Number: _____ - _____ - _____
Is well located at approved permit location? ( ) Yes or ( ) No

Appendix 3 - Health Effects

Primary Standards

	Source or Cause	Significance	Limits
Arsenic (As)	Normally found in groundwater as a natural occurrence or in surface water as an industrial pollutant of a product of agricultural runoff.	Arsenic builds up in the body over time with symptoms ranging from fatigue to coma and death.	.05 mg/L
Barium (Ba)	May be found in groundwater as a natural occurrence or as an industrial pollutant.	Barium has toxic effects on the heart, blood vessels, nerves and kidneys.	1 mg/L
Cadmium (Cd)	Primarily found in surface water as a pollutant from industries such as electroplating.	Potential damage from cadmium may take the form of anemia, retarded growth, and increased blood pressure.	0.010 mg/L
Chromium (Cr)	To be found in groundwater as a natural occurrence or in surface water as an industrial pollutant commonly from the plating industry.	Chromium can be toxic to man and can produce skin irritations when external exposure occurs or liver damage from internal exposure.	0.05 mg/L
Fluoride (F)	Dissolved in small quantities from rock and soil; fluoride may in some cases actually be added to drinking water supplies.	May cause mottling of the teeth in children depending on quantity and temperature average per year; in proper amounts, may reduce dental cavities.	4.0 mg/L
Lead (Pb)	Normally found in surface waters from industrial pollution.	Lead symptoms range from gastrointestinal disturbances to inflammation of the brain and spinal cord; toxic to infants and pregnant women.	0.05 mg/L
Mercury (Hg)	Increased concentrations in recent years have been caused by industrial and agricultural pollution.	Mercury poisoning attacks the central nervous system and may be transmitted to children as congenital disease.	0.002 mg/L
Nitrate (NO_3)	Produced by decaying organic matter, sewage, fertilizers and nitrates in the soil.	High concentrations may suggest pollution; water of high nitrate content may cause blue-babies and should not be used for infant feeding; some animals such as cattle can be poisoned by high concentrations of nitrate; nitrate encourages the growth of algae and other organisms which may produce undesirable taste and odors.	10 mg/L
Pesticides Insecticides (Chlorinated Hydrocarbons)	Primarily present as a result of agricultural runoff and spills.	Environmentally persistent and cumulative in varying degrees; these neuro-poisons (nerve poisons) cause symptoms from dizziness to convulsions to death by either cardiac or respiratory arrest	
Endrin	(Pesticide commonly used on field crops.)		0.0002 mg/L
Lindane	A pesticide used to control cotton insect and grasshoppers.	Liver/nervous system/kidney effects.	0.004 mg/L

Methoxychlor	An insect spray used to control external parasites on fruit tress and vegetables.		0.01 mg/L
Toxaphene	Pesticide used commonly in cotton farming to combat insects such as the boll weevil, bollworm, and aphids.	Caner risk.	0.005m mg/L
Herbicides	Primarily a product of agricultural runoff resulting from weed control.	Muscular tenseness to paralysis and coma. Liver/Kidney effects.	
2-4-D	Herbicide to control weeds.		0.1 mg/L
2,4,5-TP Silvex	Herbicide (cancelled in 1984)		0.01 mg/L
Radiochemical	Naturally occurring in groundwater and to a degree in surface water; caused by the leaching of radium from rock deposits. Uranium is also naturally occurring in groundwater.	Proven cancer-causing qualities.	
Radium-226		Bone cancer.	5 pCi/L
Radium-228			5 pCi/L
Gross Alpha			15 pCi/L
Gross Beta			50 pCi/L
Selenium (Se)	Obtained as a by-product of copper mining, it is normally found in groundwater and occasionally surface water as a natural occurrence.	Selenium attacks the central nervous system and can be fatal in extreme cases; minor amounts may, however, be beneficial to health.	0.01 mg/L
Silver (Ag)	Normally appearing in surface water as an industrial pollutant.	Silver may cause a permanent blue-gray discoloration of the eyes, skin, and mucous membranes.	0.05 mg/L
Trihalomethanes Chloroform Bromodichloromethane Dibromochloromethane Bromoform	Produced as a result of the interaction of chlorine wither certain organic compounds, such as decaying plant matter.	May be cancer-causing to man.	TTHM's 0.10 mg/L
Turbidity	Caused by a wide variety of suspended materials, both organic and inorganic.	Water in unclear and visually unpleasant; disinfection and proper bacteriological analysis is difficult.	1 turbidity unit (TU)

Secondary Standards

	Source or Cause	Significance	Limits
Chloride (Cl)	Dissolved from rock and soil; found in large amounts in oil-field brine, seawater, and industrial brine.	When combined with sodium, gives salty taste to drinking water and may increase the corrosiveness of water.	300 mg/L
Color	Results from decaying vegetation, organic matter, and iron compounds in solution.	Objectionable primarily for visual reasons but may also indicate organic contamination.	15 color units (CU)
Copper (Cu)	Possibly caused by contamination from mining operations.	Copper poisoning symptoms include jaundice and anemia; may cause staining and bad tastes in addition to producing a corrosive effect within the system.	1 mg/L
Dissolved Solids	Dissolved material constituents form rock and soil.	Considered a general indicator of the quality of water.	1000 mg/L
Iron (Fe)	Dissolved from rock and soil; may also come from iron pipes, pumps, and other equipment if low pH water is present. Polyphosphates can be used to keep Fe and Mn in solution.	On exposure to air, iron in groundwater oxidizes to reddish-brown (red water) which may stain laundry and utensils; large quantities can cause unpleasant taste and encourage the growth of iron bacteria.	0.3 mg/L
Manganese (Mn)	Dissolved from shale, sandstone, or river basin material and may be found in surface water in swampy areas.	Gives water a grayish appearance, may stain plumbing fixtures, laundry and can produce taste problems.	0.05 mg/L
pH (hydrogen ion concentration)	pH is lowered by acids, acid-generating slats, and free carbon dioxide; pH is raised by carbonates, bicarbonates, hydroxides, phosphates, silicates, and borates.	pH is a measure of the acid qualities of water; a pH of 7.0 means a neutral solution; water with a pH below 7.0 is normally harmful in that it may dissolve iron from plumbing facilities and mains and produce “red water” problems.	(acceptable range = 6.5 to 8.5) 7.0+ = basicity 7.0- = acidity
Sulfate (SO_4)	Dissolved from rock and soil containing gypsum, iron sulfides, and other sulfur compounds; commonly present in industrial wastes.	Sulfate in water containing calcium forms hard scale in steam boilers; in large amounts, sulfate can give a bitter rates to water and/or have a laxative effect.	300 mg/L
Taste and Odor (T&O)	Produced by decaying organic matter, hydrogen sulfide gas, iron, algae, phenols, petroleum compounds, etc.	Smell and taste may be unpleasant as well as indicating contamination, (Cl_2 & $KMnO_4$ remove T&O by oxidation.)	3 threshold odor number (T.O.N.)
Zinc (Zn)	Naturally occurring but may also indicate industrial pollution.	Zinc can produce a chalky appearance in water and produce a disagreeable taste.	5 mg/L

Other Considerations

	Source or Cause	Significance	Limits
Alkalinity, as $CaCO_3$	Indicates the presence of bicarbonates, carbonates, and hydroxides (see pH).	Information on alkalinity is useful in water treatment, softening, and control of corrosion.	No standards established.
Calcium (Ca) And Magnesium (Mg)	Dissolved from soil and rock, especially form limestone, dolomite, gypsum; calcium and magnesium are found in large quantities in seawater.	Cause most of the hardness and scale-forming properties of water which, for example, consume soap; water low in calcium and magnesium is desirable in the electroplating, tanning, dyeing, and textile manufacturing industries as well as for boiler use.	No standards established.
Carbonate (CO_3) And Bicarbonate (HCO_3)	Formed from carbonated rock such as limestone and dolomite.	Produces alkalinity and forms scale in hot water facilities as a result of hardness in combination with calcium and magnesium; bicarbonates of sodium produces “burp water.”	No standards established.
Dilutes Conductance (specific conductance) Micromhos/cm	Based on dissolved solids content of water.	Indicates the degree of mineralization; measurement of the capacity of the water to conduct an electric current.	No standards established.
Foaming agents	Chemical surfactants.	Unsightly foams.	1.5 mg/L
Hydrogen sulfide	Anaerobic decay of organic matter.	Rotten egg odor and discoloration.	0.05 mg/L
Sodium (Na)	Dissolved from rock and soil; found also in oil-field brine, seawater, industrial brine, etc.	Moderate amounts have little effect on the usefulness of water but persons on low sodium diets should consult a physician.	No standards established.
Total Hardness, as $CaCO_3$	Caused by the presence of calcium and magnesium. Can be removed by lime and soda ash coagulation.	Hard water consumes soap before a lather will form and creates scale in boilers, water heaters, and pipes.	0 to 60 mg/L = soft 61 to 120 mg/L = moderate 121 to 180 mg/L = hard 181 mg/L up = very hard

Appendix 4 - Technical Assistance and Training Contacts

Agency/Organizations	Phone	Fax
Alaska Department of Environmental Conservation (ADEC) Anchorage Office 555 Cordova Anchorage, AK 99501	269-7500	269-7600
Juneau Office Drinking Water Program 410 Willoughby Avenue, Suite 303 Juneau, AK 99801-1795	465-5350	465-5362
Fairbanks Office 610 University Avenue Fairbanks, AK 99709	451-2360	451-2188
Operator Certification Program 410 Willoughby Avenue, Suite 303 Juneau, AK 99801-1795	465-5143	465-1836
Alaska Department of Natural Resources Public Information Centers Anchorage Office 550 W. 7th Ave Ste 1260 Anchorage, AK 99501-3557	269-8400	269-8901
Fairbanks Office 3700 Airport Way Fairbanks, AK 99709-4699	451-2705	451-2706
Juneau Office 400 Willoughby Ave 4th Floor Juneau, AK 99801	465-3400	586-2954
Alaska National Rural Water Association 11723 Old Glenn Highway Suite 203-A Eagle River, AK 99577	694-6792	694-6793
Alaska Training/Technical Assistance Center (ATTAC) 1332 Seward Ave Sitka, AK 99835	(888) 750-3823 747-7756	747-7753
Safe Drinking Water Hotline	800-426-4791	

Appendix 5 - Troubleshooting Guide for Submersible Pumps

A. Circuit Breaker Trips – Fuses Blow When Motor Is Started

CAUSE OF TROUBLE	HOW TO CHECK	HOW TO CORRECT
1. Incorrect line voltage	Check line voltage terminals in the control box (or connection box in the case of the 2-wire models) with a voltmeter. Make sure that the voltage is within the minimum -maximum range prescribed by the manufacturer.	If the voltage is incorrect, contact the power company to have it corrected.
2. Defective control box: a. Defective wiring.	Check out all motor and power line wiring in the control box, following the wiring diagram in the control box. See that all connections are tight and that no short circuits exist because of worn insulation, crossed wires, etc.	Rewire any incorrect circuits. Tighten loose connections. Replace worn wires.
b. Incorrect components.	Check all control box components to see that they are the type and size specified for the pump in the manufacturer's literature. In previous service work, the wrong components may have been installed.	Replace any incorrect component with the size and type recommended by the manufacturer.
c. Defective starting capacitor (skip for 2-wire MODELS).	Using an ohmmeter, determine the resistance across the starting capacitor. When contact is made, the ohmmeter needle should jump at once, then move up more slowly. No movement indicates an open capacitor (or defective relay points); no resistance means that the capacitor is shorted.	Replace defective starting capacitor.
d. Defective relay (skip for 2-wire models).	Using ohmmeter, chock the relay coil. Its resistance should be as shown in the manufacturer's literature. Recheck ohmmeter reading across starting capacitor. With a good capacitor, no movement of the needle indicates defective relay points.	If coil resistance is incorrect or points defective, replace relay,
3. Defective pressure switch.	Check the voltage across the pressure switch point. If less than the line voltage determined in “1” above, the switch points are causing low voltage by making imperfect contact.	Clean points with a mild abrasive cloth or replace pressure switch.
4. Defective motor winding or cable: a. Shorted or open motor winding.	Check the resistance of the motor winding by using an ohmmeter on the proper terminals in the control box (see manufacturers wiring diagram). The resistance should match the ohms specific zed in the manufacturer’s data shoot. If too low, the motor winding may be shorted. If the ohmmeter needle does not move, indicating high or infinite resistance, there Is an open circuit in the motor winding.	It the motor winding is defective - shorted or open - the pump must be pulled and the motor repaired.
b. Grounded cable or winding.	Ground one lead of the ohmmeter onto the drop pipe or shell casing, than touch the other load to each motor wits terminal. If the ohmmeter needle moves appreciably when this Is dam, there in ground in either the cable or the motor winding.	Pull the pump and Inspect the Cable for damage. Replace damaged cable. If cable checks OK, the motor winding Is grounded
5. Pump sand locked.	Make pump run backwards by interchanging main and start winding (black and red) motor leads at control box.	Pull pump, disassemble and clean. Before replacing, make sure that sand has settled in well. If well Is always sandy, a submersible should not be used.

B. Pump Operates But Too Little Water

CAUSE OF TROUBLE	HOW TO CHECK	HOW TO CORRECT
1. Pump May be air locked.	Stop and start pump several times, waiting about one minute between cycles. If pump then resumes normal deliver, air lock was the trouble.	If this test falls to correct It the trouble, proceed as below.
2. Water level in well too low.	Well production may be too low for pump capacity. Restrict flow of pump output, wait for well to recover, and start pump.	If partial restriction corrects trouble, leave valve at restricted setting. Otherwise, lower pump in well if depth is sufficient. Do not lower If sand clogging might occur.
3. Discharge line check valve installed backward.	Examine check valve on discharge line to make sure that arrow indicating flow direction points in right direction.	Reverse valve if necessary.
4. Leak in drop pipe.	Raise pipe and examine for leaks.	Replace damaged section of drop pipe.
5. Pump check valve jammed by drop pipe.	When pump is pulled after completing "4" above, examine connection of drop pipe outlet. If threaded section of drop pipe has been screwed in too far, it may be jamming the pump's check valve in the closed position.	Unscrew drop pipe and cut off portion of threads.
6. Pump intake screen blocked.	The intake screen on the pump may be blocked by sand or mud. Examine.	Clean screen, and when reinstalling pump, make sure that it is located several feet above the well bottom – preferably 10 feet or more.
7. Pump parts worn.	The presence of abrasives in the water may result in excessive wear on the impeller, casing, and other close - clearance parts. Before pulling pump, reduce setting on pressure switch to see if pump shuts off. If it does, worn parts are probably at fault.	Pull pump and replace worn components.
8. Motor shaft loose.	Coupling between motor and pump shaft may have worked loose. Inspect for this after pulling pump and looking for worn components, as in “7” above.	Tighten all connections, set-screw&, etc.

C. Pump Starts Too Often

CAUSE OF TROUBLE	HOW TO CHECK	HOW TO CORRECT
1. Pressure switch defective or out of adjustment.	Check setting on pressure switch and examine for defects.	Reduce pressure setting or replace switch.
2. Leak in pressure tank.	Apply soap solution to entire surface of tank and look for bubbles indicating air escaping.	Repair or replace tank.
3. Leak in plumbing system.	Examine service lines to each house and distribution branches for leaks	Repair leeks.
4. Discharge line check valve leaks.	Remove and examine.	Clean or replace.
5. Air volume control plugged.	Remove and inspect air volume control.	Clean or replace.
6. Snifter valve plugged.	Remove and inspect snifter valve.	Clean or replace.
7. Pressure tank waterlogged.	Check sight glass.	Drain out some of the water and charge with air.

D. Pump Wont Shut Off

CAUSE OF TROUBLE	HOW TO CHECK	HOW TO CORRECT
1. Defective pressure switch.	Arcing may have caused pressure switch points to “weld” in closed position. Examine points and other parts of switch for defects.	Clean points with fine sandpaper or replace switch.
2. Pump cannot keep up with demand. a. Leaks in the system.	Well production may be too low for system demand. Temporarily restrict flow to system, and start pump.	If partial restriction of flow to system corrects trouble, the pump is not producing enough water. Look for leaks on the system.
b. Leak in drop line.	Raise pipe and examine for leaks.	Replace damaged section of drop pipe.
c. Pump parts worn.	The pressure of abrasives in the water may result in excessive wear on the impeller, casing and other close-clearance parts. Before pulling pump, reduce setting on pressure switch to see if pump shuts off. If it does, worn parts are probably at fault.	Pull pump and replace worn components.
3. High water shut-off defective.	If float switches are used move the float switch in the tank by hand to see if the switch is working.	If a float switch is not working, replace it. If the switch is okay, make sure the float switch is hanging free with enough room to float into the off position.
	If pressure switch*& are used, manually adjust the off pressure until pump shuts off.	If switch will not shut pump off, replace switch. Readjust off-pressure until pump shuts off at desired pressure. The hand lever must be hold in by hand until about 20 psi of pressure is on the line.

E. Circuit Breaker Trips, Or Fuses Flow When Motor Is Running

CAUSE OF TROUBLE	HOW TO CHECK	HOW TO CORRECT
1. Incorrect voltage.	Check line terminals in the control box (or connection box in the case of 2-wire models) with a voltmeter. Make sure that the voltage is within the minimum-maximum range prescribed by the manufacturer.	If voltage is incorrect, contact power company for service.
2. Overheated overload protection.	If sunlight or other source of heat has made box too hot, circuit breakers may trip or fuses blow. If box is hot to the touch, this may be the problem.	Ventilate or shade box, or remove from source of heat. Check Manufacturer's literature and make sure the correctly sized overload heaters are installed.
3. Defective control box components.	Using an ohmmeter, determine the resistance across the running capacitor. When contact is made, the ohmmeter needle should jump at once. Then move up more slowly. No movement indicates an open capacitor (or defective relay points); no resistance means that the capacitor is shorted. Using an ohmmeter, check the relay coil. Its resistance should be shown in the manufacturer's literature. Recheck ohmmeter reading across running capacitor. With a good capacitor, no movement of the needle indicates relay points.	Replace defective components.
4. Defective motor winding or cable.	Check the resistance of the motor winding by using an ohmmeter on the proper terminals in the control box (see manufacturer's wring diagram). The resistance should match the ohms specified in the manufacturer's data sheet. If too low, the motor winding may be shorted. If the ohmmeter needle does not move, indicating high or infinite resistance, there is an open circuit in the motor winding. Ground one lead of the ohmmeters the drop pipe or shell casing, then touch the other lead to each motor wire-terminal. If the ohmmeter needle moves appreciably when this is done, there is ground in either the cable or the motor winding.	It neither cable or winding is defective - shorted, grounded, or open – pump must be pulled and serviced.
5 Pump becomes sand-locked.	If the fuses blow while the pump is operating, sand or grit may have become wedged in the in impeller, causing the motor to lock. To check this, pull the pump.	Pull pump, disassemble, and clean. Before replacing, make sure that sand has settled in well. If well is always sandy, a submersible pump should not be used.

F. Your Circuit Breaker Does Not Trip – Motor Does Not Start But Fuses Do Not Blow

CAUSE OF TROUBLE	HOW TO CHECK	HOW TO CORRECT
1. Overload protection out.	Check fuses or circuit breaker to see that they are operable.	If fuses are blown, replace, if breaker is tripped, reset.
2. No power.	Check power supply to control box (overload. protection box) by placing a voltmeter across incoming power lines. Voltage should approximate normal line voltage.	If no power Is reaching box, contact power company for service.
3. Defective control box.	Examine wiring in control box to make sure all contacts are tight. With a voltmeter check voltage at motor wire terminals. If no voltage is shown at terminals, wiring is defective in control box.	Correct faulty wiring or tighten loose contacts.
4. Defective pressure switch.	With a voltmeter, check voltage across pressure switch while the switch is clogged. If the voltage drop Is equal to the line voltage the switch is not making contact.	Clean points or replace switch.

Appendix 6 - Quantities of Calcium Hypochlorite

65% (rows A) and liquid household bleach, 5.25% (rows B) required for water well disinfection

Depth of Water in Well (ft.)		Well Diameter (In.)															
		2	3	4	5	6	8	10	12	16	20	24	28	32	36	42	48
5	A	1T	1T	1T	1T	1T	1T	2T	3T	5T	6T	3 oz	4 oz	5 oz	7 oz	9 oz	12 oz
	B	1C	1C	1C	1C	1C	1C	1C	1C	2C	4C	1 Q	2 Q	3 Q	3 Q	4 Q	5 Q
10	A	1T	1T	1T	1T	1T	2 T	3 T	5 T	8 T	4 oz	6 oz	8 oz	10 oz	13 oz	1 1/2 lb	1 1/2 lb
	B	1C	1C	1C	1C	1C	1 C	2 C	2 C	1 Q	2 Q	3 Q	4 Q	4 Q	6 Q	8 Q	2 1/2 G
15	A	1T	1T	1T	1T	2 T	3 T	5 T	8 T	4 oz	6 oz	9 oz	12 oz	1 lb	1 1/2 lb	1 1/2 lb	2 lb
	B	1C	1C	1C	1C	1 C	2 C	3 C	4 C	2 Q	2 1/2 Q	4 Q	5 Q	6 Q	2 G	3G	4 G
20	A	1T	1T	1T	2 T	3 T	4 T	6 T	3 oz	5 oz	8 oz						
	B	1C	1C	1C	1 C	1 C	2 C	4 C	1 Q	2 1/2 Q	3 1/2 Q						
30	A	1T	1T	2 T	3 T	4 T	6 T	3 oz	4 oz	8 oz	12 oz						
	B	1C	1C	1 C	1 C	2 C	4 C	1 1/2 Q	2 Q	4 Q	5 Q						
40	A	1T	1T	2 T	4 T	6 T	8 T	4 oz	6 oz	10 oz	1 lb						
	B	1C	1C	1 C	2 C	2 C	1 Q	2 Q	2 1/2 Q	4 1/2 Q	7 Q						
60	A	1T	2 T	3 T	5 T	8 T	4 oz	6 oz	9 oz								
	B	1C	1 C	2 C	3 C	4 C	2 Q	3 Q	4 Q								
80	A	1T	3 T	4 T	7 T	9 T	5 oz	8 oz	12 oz								
	B	1C	1 C	2 C	4 C	1 Q	2 Q	3 1/2 Q	5 Q								
100	A	2 T	3 T	5 T	8 T	4 oz	7 oz	10 oz	1 lb								
	B	1 C	2 C	3 C	1 Q	1 1/2 Q	2 1/2 Q	4 Q	6 Q								
150	A	3 T	5 T	8 T	4 oz	6 oz	10 oz	1 lb	1 1/2 lb								
	B	2 C	2 C	4 C	2 Q	2 1/2 Q	4 Q	6 Q	2 1/2 G								

Quantities are indicated as: T = tablespoon; oz = ounces (by weight); C = cups; lb = pounds; Q = quarts; G = gallons
NOTE: Figures corresponding to rows A are amount of solid calcium hypochlorite required; those corresponding to rows B are amounts of liquid household bleach. For shock chlorination of iron bacteria the amounts of either compound should by multiplied by 10 to obtain the necessary chlorine concentration. For cases lying to the left of the dark line, add 5 gallons of chlorinated water as final step. For those cases to the right of the dark line, add 10 gallons of chlorinated water as final step.

Appendix 7 - Source Testing Schedule

Groundwater Source Testing Schedule

	Test	Frequency	PWS Class A	PWS Class B	This summary does not replace the current drinking water regulations.
TCR					
	Sanitary Survey	Every 5 years	√	√	Sanitary Survey must be performed by ADEC staff or an ADEC approved third party sanitary surveyor
	Total Coliform Bacteria	Every Month	√		If the water system serves more than 1,000 people per day, see 18 AAC 80.405 Table D, for the increased number of test required.
		Every Quarter		√	
	Nitrate	Annually	√	√	If nitrate test result exceeds 5.0 mg/l, begin testing quarterly. Contact ADEC to discuss how long quarterly sampling is required.
	Nitrite	One Sample on Record	√	√	Only a single Nitrite test is required if the results are below 0.5 mg/l. Otherwise, repeat quarterly for one year. Contact ADEC to discuss how long quarterly sampling is required.
Inorganic Chemicals					
	7 Old Inorganics (Phase II)	Every Period or Cycle*	√		**Arsenic, Barium, Cadmium, Chromium, Fluoride, Mercury, Selenium.** After three test results are below the MCLs, a waiver is available to reduce sampling frequency from once per period to once per cycle*. (At least one of the three test must be since 1990.)
	5 New Inorganics (Phase V)	Every Period or Cycle*	√		**Antimony, Beryllium, Cyanide, Nickel, Thallium.** After three sample results are below the MCL, a waiver is available to reduce sampling frequency from one sample per period to one sample per cycle*. (At least one of the three tests must be since 1990.)
	Asbestos	Once per Cycle* (unless waived)	√		No asbestos sampling is required if a waiver is approved. New systems contact ADEC for requirements.
	Lead and Copper	Every 6 Months	√		The number of lead/copper samples is based on population. See 18 AAC 80.545, Table E. After 90th percentile test results from two consecutive six months are below the Action Levels, annual sampling is allowed. After two additional years of test results below Action Level, sample once every three years.
		Annually	√		
		Every 3 Years	√		
Organic					
	Pesticides (SOCs), & Other Organics	Every Quarter (unless waived)	√		No SOC sampling is required if a waiver is approved. If waiver is denied, four quarters of testing is required each compliance period. Contact ADEC for more information.
	Volatile Organic Chemicals (VOCs)	Every Quarter	√		After four quarterly tests detect no regulated compound over 0.5 ug/l, sample annually. After three years of tests detect no volatile organic chemicals, a groundwater system can sample once per period*.
		Annually	√		
		Every Period	√		
Rads					
	Gross Alpha Radioactivity	Every 4 Years	√		First time compliance is based on either the test result from the composite of four consecutive quarterly samples, or on the average of the test results from four samples taken at consecutive quarterly intervals. Test one sample every 4 years thereafter.
Reporting					
	Consumer Confidence Report	Annually	√		Community Water Systems (CWS) distribute to ADEC and deliver to all customers by July 1 for the previous year. A CWS serves at least 25 residents or 15 residential service connections year round.

Surface Water Source Testing Schedule

	Test	Frequency	PWS Class A	PWS Class B	This summary does not replace the current drinking water regulations.
TCR					
	Sanitary Survey	Every 5 years	√	√	Sanitary Survey must be performed by ADEC staff or an ADEC approved third party sanitary surveyor
	Total Coliform Bacteria	Every Month	√	√	If the water system serves more than 1,000 people per day, see 18 AAC 80.405 Table D, for the increased number of test required.
	Nitrate	Every Quarter	√		New Class A systems test quarterly for at least four quarters. Reduced monitoring to annual sampling may be granted if all test results are below 5.0 mg/l. If nitrate test result exceeds 5.0 mg/l, continue quarterly. Contact ADEC to discuss how long quarterly sampling is required.
		Annually	√	√	
	Nitrite	One Sample on Record	√	√	Only a single Nitrite test is required if the results are below 0.5 mg/l. Otherwise, repeat quarterly for one year. Contact ADEC to discuss how long quarterly sampling is required.
Inorganic Chemicals					
	7 Old Inorganics (Phase II)	Annually	√		**Arsenic, Barium, Cadmium, Chromium, Fluoride, Mercury, Selenium.** After three test results are below the MCLs, a waiver is available to reduce sampling frequency from once per period to once per cycle*. (At least one of the three test must be since 1990.)
		Once per Cycle*	√		
	5 New Inorganics (Phase V)	Annually	√		**Antimony, Beryllium, Cyanide, Nickel, Thallium.** After three sample results are below the MCL, a waiver is available to reduce sampling frequency from one sample per period to one sample per cycle*. (At least one of the three tests must be since 1990.)
		Once per Cycle*	√		
	Asbestos	Once per Cycle* (unless waived)	√		No asbestos sampling is required if a waiver is approved. New systems contact ADEC for requirements.
	Lead and Copper	Every 6 Months	√		The number of lead/copper samples is based on population. See 18 AAC 80.545 Table E. After 90th percentile test results from two consecutive six months are below the Action Levels, annual sampling is allowed. After two additional years of test results below Action Level, sample once every three years.
		Annually	√		
		Every 3 Years	√		
Organic					
	Pesticides (SOCs), & Other Organics	Every Quarter (unless waived)	√		No SOC sampling is required if a waiver is approved. If waiver is denied, four quarters of testing is required each compliance period. Contact ADEC for more information.
	Volatile Organic Chemicals (VOCs)	Every Quarter	√		After four quarterly tests detect no regulated compound over 0.5 ug/l, sample annually.
		Annually	√		
	Total Trihalomethanes	Every Quarter	√		Only systems using chlorine for disinfection and serving more than 10,000 people (see 40 CFR 141.30 as amended through August 15, 1989 for details).
Rads					
	Gross Alpha Radioactivity	Every 4 Years	√		First time compliance is based on either the test result from the composite of four consecutive quarterly samples, or on the average of the test results from four samples taken at consecutive quarterly intervals. Test one sample every 4 years thereafter.
Reporting					
	Consumer Confidence Report	Annually	√		Community Water Systems (CWS) distribute to ADEC and deliver to all customers by July 1 for the previous year. A CWS serves at least 25 residents or 15 residential service connections year round.

Distribution System Chlorine	Every Month	√	√	Distribution point chlorine testing is required at the same time and location as total coliform samples are collected. Report test results monthly on operator report.
Entry Point Chlorine	Continuously or daily grab samples	√	√	Population determines how many times a day chlorine is measured (see 18 AAC 80.655). Report results monthly. Telephone ADEC if entry point chlorine drops below 0.2 mg/l for 4 or more hours.
Fluoride	Daily	√		Fluoride sampling is required if fluoride is added to water. Testing is required every day fluoride is added to water. Report test results monthly. Fill-and-draw systems test fluoride daily while it is being added, and weekly after it has been added.
Turbidity	Continuously or every 4 hours	√	√	Fill and draw systems measure while water is being filtered. All other systems measure daily at frequency determined by population and filtration type (see 18 AAC 80.660/80.665). Contact ADEC for your requirements. Report test results monthly. Telephone ADEC if turbidity limits are exceeded.

NOTE: *Period = 3 years (1999-2001, 2002-2005, 2006-2008, etc.)*Cycle = 9 years (1993-2001, 2002-2010, etc.)
This Appendix was adapted from ADEC's PWS Testing Schedule at http://www.state.ak.us/local/akpages/ENV.CONSERV/deh/water/testing.pdf

Appendix 8 - Boil Water Notice Example

BOIL WATER NOTICE

Drinking water from the
may be contaminated.

This BOIL WATER NOTICE is in effect from March 5, 2002 until further notice.

Boil Water 2 minutes before drinking.

For more information contact the Alaska Department of Environmental Conservation office at 465-5350.

Appendix 9 - Laboratory Fees

PUBLIC WATER SUPPLY LABORATORY DRINKING WATER ANALYSES

Analyses		**Unit Rates**
Inorganic Chemical Contaminants*		$ 375
Antimony	Fluoride	
Arsenic	Mercury	
Barium	Nickel	
Beryllium	Nitrate	
Cadmium	Nitrite	
Chromium	Selenium	
Cyanide	Thallium	
Asbestos		Quote
Secondary Contaminants		400
Aluminum***	Manganese	
Chloride	Odor	
Color	pH	
Copper	Silver***	
Corrosivity (Langelier Index)	Sodium	
Fluoride	Sulfate	
Foaming Agents (MBAS)	Total Dissolved Solids	
Iron	inc	
Miscellaneous Inorganic Contaminant Tests		
Fluoride		25
Nitrate + Nitrite		30
Nitrate25		
Corrosion Monitoring		
Corrosion Coupons (ASTM Total Immersion Test)		60
Lead & Copper (EPA Lead & Copper Rule First Draw Sample)		35
Water Quality Parameters (EPA Lead & Copper Rule)		75
Consultation Services for Water Systems		Quote
Bacteriological Contaminants		
Total Coliform by "ColiLert" Presence/Absence		25
Total Coliform with mailer service		27
Total Coliform with pick up service (Anchorage or Fairbanks only)		35
Protozoan Sampling and Analysis:		
Microscopic Particulate Analysis + (EPA Region 10 Protocol)		400
MPA Sampling Kit Rental ++	Rental per day	50

Organic Chemical Contaminants		Quote
Volatile Organic Chemicals (VOCs)	(EPA Method 502.2/524.2)	250
EDB & DBCP	(EPA Method 504. 1)	200
Disinfection By-Product and Precursor Analyses:		
Total Trihalomethanes	(EPA Method 501.1/524.2)	125
Haloacetic Acids	(EPA Method 552)	250
Simulated Distribution System (SDS) Prep. for THM & HAA Samples		200
Total Organic Carbon	(SM53 10 B)	60
UV254 Absorbance	(UV Spectrophotometer)	30
Physical Contaminants		
Turbidity		20
Particle Size Analysis	(User Particle Counter)	65
Radioactive Contaminants Gross Alpha +++		125
Quarterly Composited Gross Alpha +++		195
Radium 226 & 228 +++		Quote

* 18 AAC 80.300(b)(1), ADEC Drinking Water Regulations (October, 1999) Inorganic Chemical Contaminants

** 18 AAC 80.300(c), ADEC Drinking Water Regulations (October, 1999) Secondary Maximum Chemical Contaminants

*** Aluminum and silver were included in the 18 AAC 80.070, ADEC Drinking Water Regulations (May, 1994), Secondary Maximum Contaminant list, but were deleted in 1999.

+ Procedure for determining "Ground Water Under The Direct Influence of Surface Water", Alaska Drinking Water Procedures Manual, ADEC (February, -1993)

++ Sampling apparatus includes flow meter, filter canister, interconnecting hoses and fittings and sterile 1µ filter.

+++ Run by ADEC Approved Subcontract Lab. Price is per sample. Quarterly compositing service includes the final gross alpha analysis.

Appendix 10 - Material Safety Data Sheet Example

Calcium Hypochlorite
MSDS Number: C0418 --- *Effective Date: 08/02/00*

1. Product Identification

Synonyms: Hypochlorous Acid, Calcium Salt; Losantin; Calcium Hypochloride; Chlorinated lime
CAS No.: 7778-54-3
Molecular Weight: 142.98
Chemical Formula: CaCl2O2
Product Codes: 1378

2. Composition/Information on Ingredients

Ingredient	CAS No	Percent	Hazardous
Calcium Hypochlorite	7778-54-3	100%	Yes

3. Hazards Identification

Emergency Overview

DANGER! STRONG OXIDIZER. CONTACT WITH OTHER MATERIAL MAY CAUSE FIRE. CORROSIVE. CAUSES BURNS TO ANY AREA OF CONTACT. HARMFUL IF SWALLOWED OR INHALED. WATER REACTIVE.

J.T. Baker SAF-T-DATA(tm) Ratings (Provided here for your convenience)

Health Rating: 2 - Moderate

Flammability Rating: 0 - None
Reactivity Rating: 3 - Severe (Oxidizer)
Contact Rating: 2 - Moderate
Lab Protective Equip: GOGGLES; LAB COAT; VENT HOOD; PROPER GLOVES
Storage Color Code: Yellow (Reactive)

Potential Health Effects

Inhalation:
Corrosive. Extremely destructive to tissues of the mucous membranes and upper respiratory tract. Symptoms may include burning sensation, coughing, wheezing, laryngitis, shortness of breath, headache, nausea and vomiting. Inhalation may be fatal as a result of spasm inflammation and edema of the larynx and bronchi, chemical pneumonitis and pulmonary edema.
Ingestion:
Corrosive. Swallowing can cause severe burns of the mouth, throat, and stomach. Can cause sore throat, vomiting, diarrhea.
Skin Contact:
Corrosive. Symptoms of redness, pain, and severe burn can occur.
Eye Contact:
Corrosive. Contact can cause blurred vision, redness, pain and severe tissue burns.
Chronic Exposure:
Repeated exposures to calcium hypochlorite may cause bronchitis to develop with cough and/or shortness of breath.
Aggravation of Pre-existing Conditions:
No information found.

---

4. First Aid Measures

Inhalation:
Remove to fresh air. If not breathing, give artificial respiration. If breathing is difficult, give oxygen. Get medical attention immediately.
Ingestion:
If swallowed, DO NOT INDUCE VOMITING. Give large quantities of water. Never give anything by mouth to an unconscious person. Get medical attention immediately.
Skin Contact:
Immediately flush skin with plenty of water for at least 15 minutes while removing contaminated clothing and shoes. Get medical attention immediately. Wash clothing before reuse. Thoroughly clean shoes before reuse.
Eye Contact:
Immediately flush eyes with plenty of water for at least 15 minutes, lifting lower and upper eyelids occasionally. Get medical attention immediately.

5. Fire Fighting Measures

Fire:
Not combustible, but substance is a strong oxidizer and its heat of reaction with reducing agents or combustibles may cause ignition. Thermally unstable; at higher temperatures, may undergo accelerated decomposition with release of heat and oxygen.
Explosion:
Sealed containers may rupture when heated. An explosion can occur if either a carbon tetrachloride or a dry ammonium compound fire extinguisher is used to extinguish a fire involving calcium hypochlorite. Sensitive to mechanical impact.
Fire Extinguishing Media:
Use flooding quantities of water as fog or spray. Use water spray to keep fire-exposed containers cool. Avoid direct contact with water; reacts with water releasing chlorine gas. Fight fire from protected location or maximum possible distance. Do not use dry chemical fire extinguishers containing ammonium compounds. Do not use carbon tetrachloride fire extinguishers. Do not allow water runoff to enter sewers or waterways.
Special Information:
In the event of a fire, wear full protective clothing and NIOSH-approved self-contained breathing apparatus with full facepiece operated in the pressure demand or other positive pressure mode.

6. Accidental Release Measures

Remove all sources of ignition. Keep water away from spilled material. Ventilate area of leak or spill. Wear appropriate personal protective equipment as specified in Section 8. Spills: Clean up spills in a manner that does not disperse dust into the air. Use non-sparking tools and equipment. Pick up spill for recovery or disposal and place in a closed container. Do not seal tightly.

7. Handling and Storage

Keep in a tightly closed container, stored in a cool, dry, ventilated area. Protect against physical damage and moisture. Isolate from any source of heat or ignition. Avoid storage on wood floors. Separate from incompatibles, combustibles, organic or other readily oxidizable materials. Containers of this material may be hazardous when empty since they retain product residues (dust, solids); observe all warnings and precautions listed for the product.

8. Exposure Controls/Personal Protection

Airborne Exposure Limits:
None established.
Ventilation System:
A system of local and/or general exhaust is recommended to keep employee

exposures as low as possible. Local exhaust ventilation is generally preferred because it can control the emissions of the contaminant at its source, preventing dispersion of it into the general work area. Please refer to the ACGIH document, *Industrial Ventilation, A Manual of Recommended Practices*, most recent edition, for details.

Personal Respirators (NIOSH Approved):
For conditions of use where exposure to the dust or mist is apparent, a half-face dust/mist respirator may be worn. For emergencies or instances where the exposure levels are not known, use a full-face positive-pressure, air-supplied respirator. WARNING: Air-purifying respirators do not protect workers in oxygen-deficient atmospheres.

Skin Protection:
Wear impervious protective clothing, including boots, gloves, lab coat, apron or coveralls, as appropriate, to prevent skin contact.

Eye Protection:
Use chemical safety goggles and/or a full face shield where splashing is possible. Maintain eye wash fountain and quick-drench facilities in work area.

---

9. Physical and Chemical Properties

Appearance:
White or grayish-white powder.

Odor:
Chlorine-like odor.

Solubility:
Soluble in water; reacts, releasing chlorine gas.

Specific Gravity:
2.35 @ 20C

pH:
No information found.

% Volatiles by volume @ 21C (70F):
0

Boiling Point:
No information found.

Melting Point:
Decomposes above 177C (350F), releasing oxygen.

Vapor Density (Air=1):
6.9

Vapor Pressure (mm Hg):
Not applicable.

Evaporation Rate (BuAc=1):
No information found.

---

10. Stability and Reactivity

Stability:
Rapidly decomposes on expsure to air. May decompose violently if exposed to heat or direct sunlight. Thermally unstable; decomposes at 177C (350F).
Hazardous Decomposition Products:
Calcium hypochlorite gives off oxygen, chlorine and chlorine monoxide.
Hazardous Polymerization:
Will not occur.
Incompatibilities:
Calcium hypochlorite is a strong oxidizer. Reacts with water and acids giving off chlorine gas. Forms explosive compounds with ammonia and amines. Incompatable with organic materials, nitrogen compounds and combustible materials.
Conditions to Avoid:
Heat, flame, moisture, dusting, sources of ignition and shock, and incompatibles.

11. Toxicological Information

Calcium hypochlorite: LD50 oral rat 850 mg/kg. Investigated as a tumorigen and mutagen.

--------\Cancer Lists\----------

Ingredient	---NTP Carcinogen--- Known	Anticipated	IARC Category
Calcium Hypochlorite (7778-54-3)	No	No	3

12. Ecological Information

Environmental Fate:
No information found.
Environmental Toxicity:
No information found.

13. Disposal Considerations

Whatever cannot be saved for recovery or recycling should be handled as hazardous waste and sent to a RCRA approved waste facility. Processing, use or contamination of this product may change the waste management options. State and local disposal regulations may differ from federal disposal regulations. Dispose of container and unused contents in accordance with federal, state and local requirements.

14. Transport Information

Domestic (Land, D.O.T.)

Proper Shipping Name: CALCIUM HYPOCHLORITE, DRY
Hazard Class: 5.1
UN/NA: UN1748
Packing Group: II
Information reported for product/size: 2.5KG

International (Water, I.M.O.)

Proper Shipping Name: CALCIUM HYPOCHLORITE, DRY
Hazard Class: 5.1
UN/NA: UN1748
Packing Group: II
Information reported for product/size: 2.5KG

15. Regulatory Information

--------\Chemical Inventory Status - Part 1\----------

Ingredient	TSCA	EC	Japan	Australia
Calcium Hypochlorite (7778-54-3)	Yes	Yes	Yes	Yes

--------\Chemical Inventory Status - Part 2\----------

		--Canada--		
Ingredient	Korea	DSL	NDSL	Phil.
Calcium Hypochlorite (7778-54-3)	Yes	Yes	No	Yes

--------\Federal, State & International Regulations - Part 1\----------

	-SARA 302-		------SARA 313----	
Ingredient	RQ	TPQ	List	Chemical Catg.
Calcium Hypochlorite (7778-54-3)	No	No	No	No

```
--------\Federal, State & International Regulations - Part 2\--------------
                                                        -RCRA-    -TSCA-
Ingredient                                  CERCLA      261.33     8(d)
----------------------------------------    ------      ------    ------
Calcium Hypochlorite (7778-54-3)            10          No         No


Chemical Weapons Convention:  No     TSCA 12(b):  No     CDTA:  No
SARA 311/312:  Acute: Yes      Chronic: Yes  Fire: Yes Pressure: No
Reactivity: Yes         (Pure / Solid)
```

Australian Hazchem Code: 2PE
Poison Schedule: S5
WHMIS:
This MSDS has been prepared according to the hazard criteria of the Controlled Products Regulations (CPR) and the MSDS contains all of the information required by the CPR.

16. Other Information

NFPA Ratings: Health: **3** Flammability: **0** Reactivity: **1** Other: **Oxidizer**
Label Hazard Warning:
DANGER! STRONG OXIDIZER. CONTACT WITH OTHER MATERIAL MAY CAUSE FIRE. CORROSIVE. CAUSES BURNS TO ANY AREA OF CONTACT. HARMFUL IF SWALLOWED OR INHALED. WATER REACTIVE.
Label Precautions:
Keep from contact with clothing and other combustible materials.
Store in a tightly closed container.
Remove and wash contaminated clothing promptly.
Do not store near combustible materials.
Do not get in eyes, on skin, or on clothing.
Do not breathe dust or vapor.
Keep container closed.
Use only with adequate ventilation.
Wash thoroughly after handling.
Do not contact with water.
Label First Aid:

If swallowed, DO NOT INDUCE VOMITING. Give large quantities of water. Never give anything by mouth to an unconscious person. If inhaled, remove to fresh air. If not breathing, give artificial respiration. If breathing is difficult, give oxygen. In case of contact, immediately flush eyes or skin with plenty of water for at least 15 minutes while removing contaminated clothing and shoes. Wash clothing before reuse. In all cases get medical attention immediately.

Product Use:

Laboratory Reagent.

Revision Information:

No changes.

Disclaimer:

****

Mallinckrodt Baker, Inc. provides the information contained herein in good faith but makes no representation as to its comprehensiveness or accuracy. This document is intended only as a guide to the appropriate precautionary handling of the material by a properly trained person using this product. Individuals receiving the information must exercise their independent judgment in determining its appropriateness for a particular purpose. MALLINCKRODT BAKER, INC. MAKES NO REPRESENTATIONS OR WARRANTIES, EITHER EXPRESS OR IMPLIED, INCLUDING WITHOUT LIMITATION ANY WARRANTIES OF MERCHANTABILITY, FITNESS FOR A PARTICULAR PURPOSE WITH RESPECT TO THE INFORMATION SET FORTH HEREIN OR THE PRODUCT TO WHICH THE INFORMATION REFERS. ACCORDINGLY, MALLINCKRODT BAKER, INC. WILL NOT BE RESPONSIBLE FOR DAMAGES RESULTING FROM USE OF OR RELIANCE UPON THIS INFORMATION.

****

Prepared by: Strategic Services Division
Phone Number: (314) 539-1600 (U.S.A.)

Appendix 11 - Formula Sheet

Abbreviations:

in	inches
ft	feet
in^2	square inches (sq. in.)
ft^2	square feet (sq. ft.)
ft^3	cubic feet (cu. ft.)
hr	hours
min	minutes
sec	seconds
d	days
lb	pounds
gal	gallons
MG	million gallons
gpm	gallons per minute (gal/min)
gpd	gallons per day (gal/d)
MGD	million gallons per day
cfs	cubic feet per second (ft^3/sec)
ppm	parts per million
mg/L	milligrams per liter
hp	horsepower
psi	pounds per square inch
kWh	kilowatt hours
kW	kilowatts
mL	milliliter

Conversion Factors:

Length:

12 in = 1 ft
5280 ft = 1 mile

Area:

1 ft^2 = 144 in^2
1 acre = 43,560 ft^2

Volume:

1 ft^3 = 7.48 gal

Time:

1 min = 60 sec
1 hr = 60 min = 3600 sec
1 d = 24 hr = 1440 min
1440 min = 86,400 sec

Flowrate:

1 MGD = 1.55 cfs = 694.4 gpm
1 gpm = 60 ga/hr = 1440 gal/d
1 gal/hr = 24 gal/d

Power & Energy:

1 kW = 1.341 hp
1 kW-hr = 2.655 x 10^6 ft lbs
1 hp = 33,000 ft-lb/min
= 550 ft-lb/sec

Force & Pressure:

1 psi = 2.31 ft (pressurehead)

Temperature:

$T(^0F) = T(^0C) \times 1.8 + 32$
$T(^0C) = [T(^0F) - 32.2] / 1.8$

Geometry:

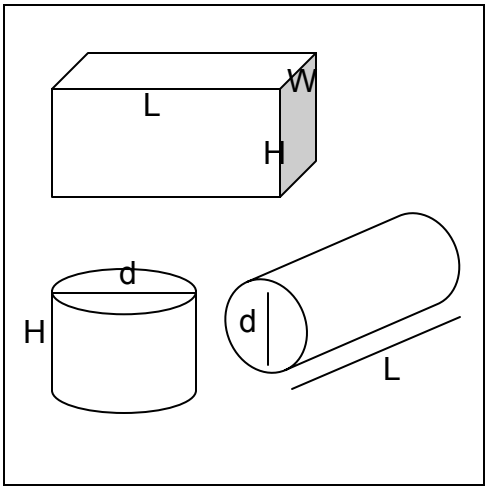

Rectangular tank:

Area = length x width (top)
= height x width (vertical cross-section)

Volume = length x width x height

Circular tank: (note: $\pi/4$ = to 0.785)

Circumference = π x d or 3.14 x d

Area = $(\pi/4) \times d^2$

Volume = $(\pi/4) \times d^2 \times H$ (tank)
= $(\pi/4) \times d^2 \times L$ (pipe)

NOTE: If all dimensions are in feet, area will be in ft^2 and volume in ft^3. For pipes, convert pipe diameter to dimensions of *feet* before using the above formula.

Basic Hydraulics:

Detention and Delivery Times:

$$\text{Detention time (min)} = \frac{\text{tank capacity (gal)}}{\text{flowrate (gpm)}}$$

$$\text{Detention time (days)} = \frac{\text{tank capacity (Mgal)}}{\text{flowrate (MGD)}}$$

Force, Pressure and Water:

Water weighs 8.34 lbs/gal or 62.4 lb/ft^3.
A column of water 2.31 feet high exerts a pressure of 1.0 psi at its base.
A column of water 1.0 feet high exerts a pressure of 0.433 psi or 62.4 lb/ft^3 at its base.

Concentration, Dose and Volume (Note: ppm = mg/L)

Dosage (lb) = concentration (mg/L) x volume (MG) x 8.34
Lb/day = mg/L x gpm x 0.012

$$\text{Mg/L} = \frac{\text{lbs}}{\text{MG} \times 8.34} \qquad \text{MG} = \frac{\text{lbs}}{\text{mg/L} \times 8.34}$$

References and Credits

Arasmith, Skeet. Introduction To Small Water Systems – Student Manual, 3rd Edition. Albany, OR: ACR Publications, 1999.

Arasmith Consulting Resources; Arasmith, Skeet. Operation and Maintenance of Hypochlorite Systems. Albany, OR: ACR Publications, 1993.

"EPA Proposes Lower Arsenic Limit." On Tap Drinking Water News For America's Small Communities Spring 1994; Volume 3, Issue 2

Groundwater Manual For Small Water System. Drinking Water Assistance Program, The Montana Water Center, Montana State University; January 1999.

Holden, W., S., et. al. Water Treatment and Examination; The Society for Water Treatment Examination. London: J. & A. Churchill, 1970.

How Electricity Travels: http://www.culverco.com/resources/esw/science/basics.html

Karassik, Igor J., et. al. Pump Handbook 3rd Edition New York: McGraw-Hill, 2001.

Manual of Instruction for Water Treatment Plant Operators. New York State Department of Health, Office of Environmental Health Manpower. New York.

Math Preparation for Certification: http://nrwa./OM-Chap%204.htm

McKay, FS. Mottled enamel: the prevention of its further production through a change of the water supply at Oakley, Idaho. J Am Dent Assoc 1933; 20: 1137-49

Recommended Standards For Water Works. New York: Health Education Services, 1997.

Removal Of The Pump; UCLA Department of Epidemiology; http://www.ph.uclaa.edu/epi/snow/removal.html

Science & Math Trivia & Useless Facts: wysiwyg://46/http://www.jayp.net/trivia/science1.htm

Small Water System Operation and Maintenance; 4th Edition. California: California State University Sacramento, 1999.

State of Alaska Department of Environmental Conservation. 18 AAC 80 Drinking Water. As amended through October 1, 1999.

Symons, James M., et. al. The Drinking Water Dictionary Colorado: American Water Works Association, 2000.

The Groundwater Foundation: http://www.groundwater.org/GWB Basics/ wells.htm

USEPA Region 8 Small Community Work Group. Everything You Wanted to Know About Environmental Regulations…. But Were Afraid to Ask! A Guide for Small Communities. January 1999 Revised Edition.

USEPA Region 9. The Safe Drinking Water Act; A Pocket Guide to the Requirements for the Operators of Small Water Systems. June 1993.

USEPA, Office of Water Programs, Water Supply Division. Manual of Individual Water Supply Systems First printed 1973, Revised 1974, Reprinted 1975.

USEPA. A Pocket Sampling Guide for Operators of Small Water Systems: Phases II and V. July 1994.

Webster's II New College Dictionary. 1999.

The valve figures in Chapter 6 were used by permission from the Red-White Valve Corp., 20600 Regency Lane, Lake Forest, CA 92630. http://www.redwhitevalveusa.co