Alaska Department of Environmental Conservation
Operator Training and Certification Program

Wastewater Stabilization Pond, Wastewater Collection, and Wastewater Treatment Facility Classification Information

Updated 6/5/15

System Classification Information

Wastewater Stabilization Pond

- A wastewater treatment system which scores 1 – 30 points under the wastewater treatment point classification system and where a stabilization pond without aeration is the only means of secondary treatment.

Wastewater Collection and Wastewater Treatment Systems

- A public or private wastewater system that
  - Has ≥ 100 service connections, or
  - Serves ≥ 500 people per day.

System Classification Information

Wastewater Collection Systems:

- Class I: 15 to 500 service connections
- Class II: 501 to 5,000 service connections
- Class III: 5,001 to 15,000 service connections
- Class IV: More than 15,000 service connections
- *Systems where gravity is the only means of wastewater flow are Class I systems regardless of the number of service connections*
- *Systems with 15 or more main line lift stations will be classified at one class higher than the class determined above*

System Classification Information

Wastewater Treatment Systems:

- Class I: 1 – 30 points
- Class II: 31 – 55 points
- Class III: 56 – 75 points
- Class IV: 76 points and greater

Point Rating System:

Size

Peak day design capacity, gallons per day:

- Less than 10,000: 1
- 10,000 – 50,000: 2
- 50,001 – 100,000: 4
- 100,001 – 500,000: 9
- 500,001 – 1,000,000: 12
- 1,000,001 – 5,000,000: 16
- 5,000,001 – 10,000,000: 20
- 10,000,001 – 50,000,000: 25
- Greater than 50,000,000: 30

Pretreatment

- Influent pumping: 2
- Flow equalization basin: 1
- Manually cleaned screens: 1
- Mechanically cleaned screens: 2
- Fine screens, including microscreens: 3
- Comminutor, barminutor, grinders: 2
- Grit removal: 2

Primary Treatment

- Primary clarifiers: 4
- Primary clarifiers with chemical addition: 7
- Imhoff tank, or other method of combined sedimentation and digestion, other than a septic tank: 3
- Dissolved air flotation: 16

Secondary Treatment

- Trickling filter without recirculation: 5
- Trickling filter with recirculation: 8
- Activated sludge:
  - Oxidation ditch: 8
  - Diffused or dispersed aeration: 10
  - Pure oxygen: 15
  - Sequencing batch reactor (SBR), intermittent cycle extended aeration system (ICEAS), or other batch treatment method: 20
  - Additional points if an activated sludge plant is operated in high rate mode or contact stabilization mode: 2
- Rotating biological contactor: 10
- Activated bio-filter with aeration: 10
- Activated bio-filter without aeration: 8
- Stabilization ponds without aeration: 5
- Aerated lagoon: 8
- Secondary clarifiers: 4
- Secondary clarifiers with chemical addition: 7

Advanced Waste Treatment

- Polishing pond or effluent flow equalization:2
- Chemical and physical treatment without secondary treatment:20
- Chemical and physical treatment following secondary treatment: 15
- Ion exchange: 4
- Granular media filtration: 8
- Membrane filtration, including reverse osmosis: 10
- Electrodialysis, electrodialysis reversal: 20
- Biological or combined chemical and biological nutrient removal: 12
- Nitrification by extended aeration only: 2
- Chemical precipitation of phosphorous: 3
- pH adjustment: 3
- Activated carbon columns or beds: 8

In-plant Odor Control

- Biofilter: 3
- Adsorption with activated carbon or equal adsorbent: 3
- Wet Scrubber: 6
- Thermal deactivation with catalytic process: 6
- Odor-reducing sprays: 2

Sludge Thickening and Dewatering

- Sludge decant tank: 2
- Gravity thickener basin: 3
- Gravity belt thickener: 4
- Screw press: 5
- Centrifuge: 6
- Belt filter press, plate-and-frame press, or vacuum filter: 8
- Sludge bagger: 3
- Evaporative sludge drying by means of drying beds:2
    - Additional points if a polymer is added to sludge before the sludge is put in drying beds: 3

Sludge Stabilization and Conditioning

- Unheated anaerobic digestion: 8
- Heated anaerobic digestion: 10
- Aerobic digestion: 5
- Wet oxidation: 10
- Chemical stabilization with lime: 3
- In-vessel composting, if controlled and operated by the operator as part of routine systems operations: 10
- Static pile composting, if controlled and operated by the operator as part of routine system operations: 5

Solids Disposal

- Incineration, if controlled and operated by the operator as part of routine system operations: 12
- Land application, if controlled and operated by the operator as part of routine system operations: 5
- Sludge lagoon: 3
- Off-site disposal: 1

Disinfection

- Liquid and powdered hypochlorites: 3
    - Additional points if hypochlorites are generated on-site:2
- Gas chlorine: 12
- Chlorination using tablets: 1
- Ultraviolet light: 3
- Ozonation: 10
- Dechlorination with gas: 10
- Dechlorination with chemical dechlorination agents other than gas: 3
- Dechlorination using tablets: 1

Effluent Discharge

- Plant pumping of effluent: 2
- Effluent aeration: 2

WWT Facility Classification Cheat Sheet

Generic WWT Facility Flow Diagram

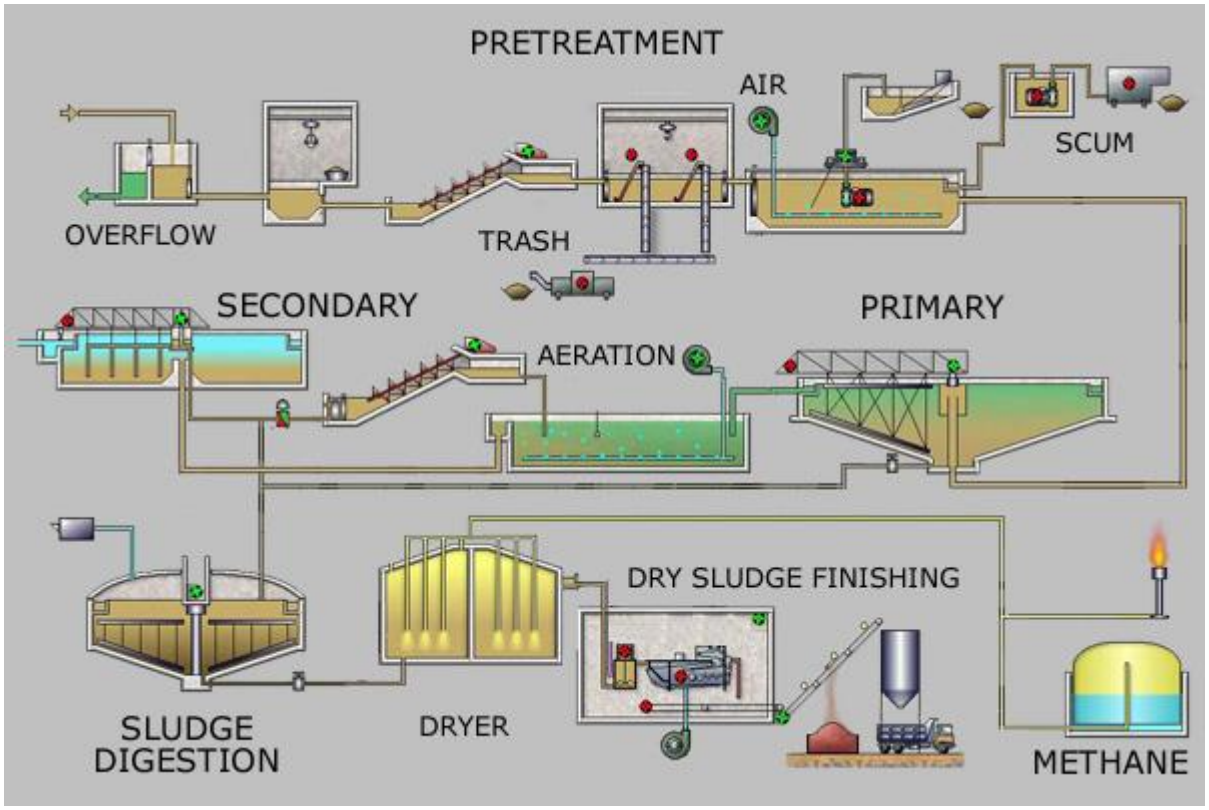

Figure 1 (Courtesy of Sustainable IIT Delhi)

Pretreatment

- *Influent pumping:* Wastewater is pumped to the plant instead of flowing via gravity.
- *Flow equalization basin:* A basin or tank where a portion of the wastewater is stored or held back during peak flows for release during low-flow periods.
- *Screens:* Device used to catch large debris such as rags, roots, wood, etc., to prevent damage to equipment. Can be either ***manually*** or ***mechanically*** cleaned.

Figure 2 (Courtesy of www.infobarscreens.com)

Manually cleaned bar screen

Mechanically cleaned bar screen

Figure 3 (Courtesy of China Chemnet)

Fine screen

Figure 4 (Courtesy of schreiberwater.com/FineScreen.shtml)

- *Comminutor or Barminutor or Grinder:* A device used to reduce solids chunks in wastewater by shredding, cutting, or grinding.

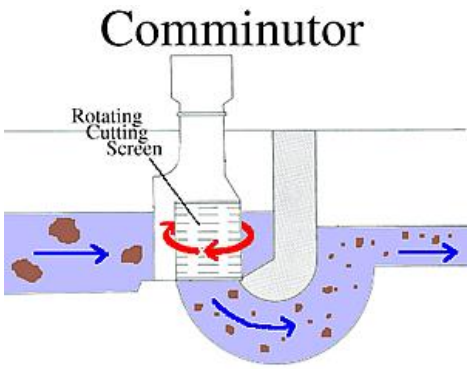

Figure 5 (Courtesy of water.me.vccs.edu)

Comminutor

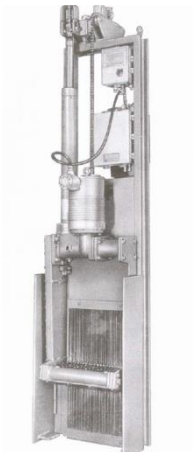

Figure 6 (Courtesy of Operation of Wastewater Treatment Plants, CSU Sacramento Vol. 1; 7th ed.)

Barminutor

Figure 7 (Courtesy of sispaltd.com)

Grinder

- *Grit Removal:* Grit can be removed via a grit chamber or grit channel.

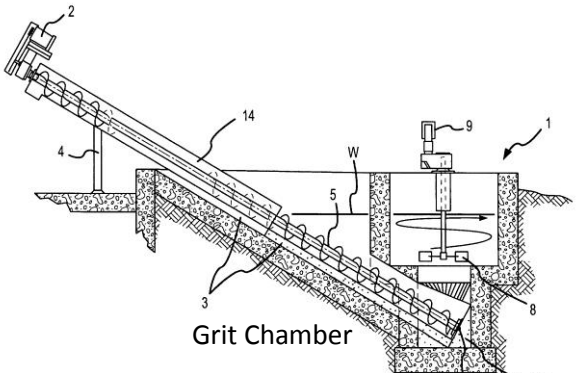

Grit Chamber

Figure 8 (Courtesy of SCHLOSS ENGINEERED EQUIPMENT, INC., CO.

Grit Channel

Figure 9 (Courtesy of undermontreal.com/montreal-wastewater-treatment-plant/

Primary Treatment

- *Primary Clarifier:* A sedimentation or settling tank that helps clarify or clear up the wastewater and located immediately after the bar screen, comminutor, or grit channel. Tanks can be square, rectangular, or circular.
    - *Chemical addition:*
        - Polymers to improve settling
        - Chlorine or potassium permanganate for odor control
        - Iron and aluminum compounds such as ferric chloride and alum, for phosphorus removal and improving settling

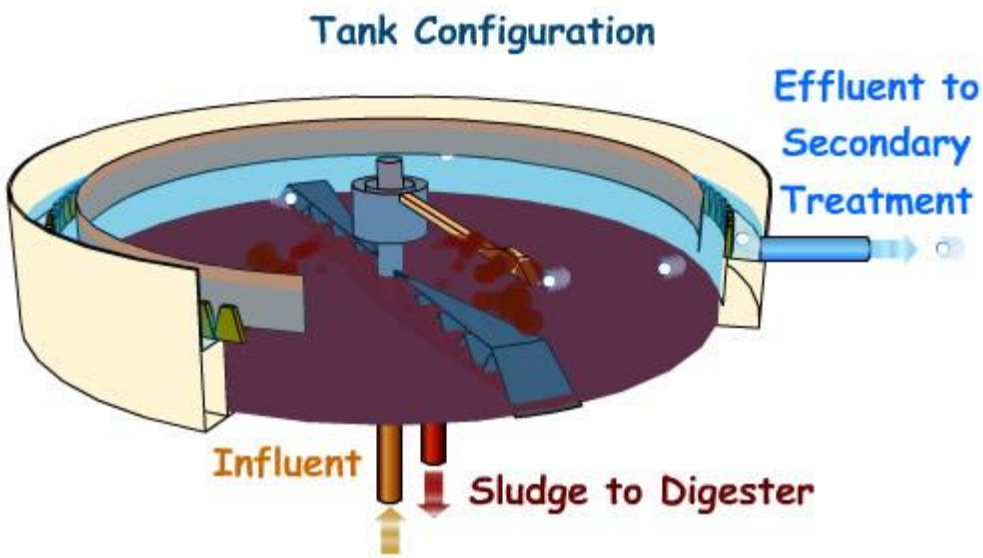

Figure 10 (Courtesy of techalive.mtu.edu/meec/module21/CSOs.htm)

- *Imhoff Tank:* Tank where settling occurs along with anaerobic digestion of the extracted sludge.

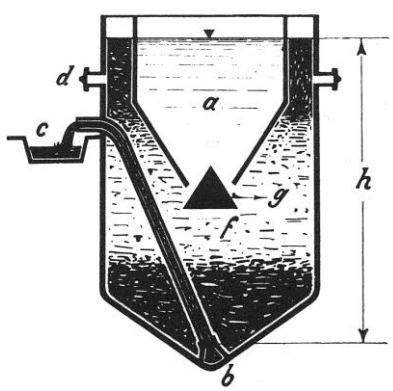

Figure 11 (commons.wikimedia.org/wiki/File:Emscherbrunnen.jpg)

- *Dissolved air flotation (DAF):* Process by which air is dissolved in water then released to atmospheric pressure in a flotation tank or basin. The air will float to the surface carrying solids which are then skimmed off. Heavier particles will sink to the bottom where they are removed by a sludge collector.

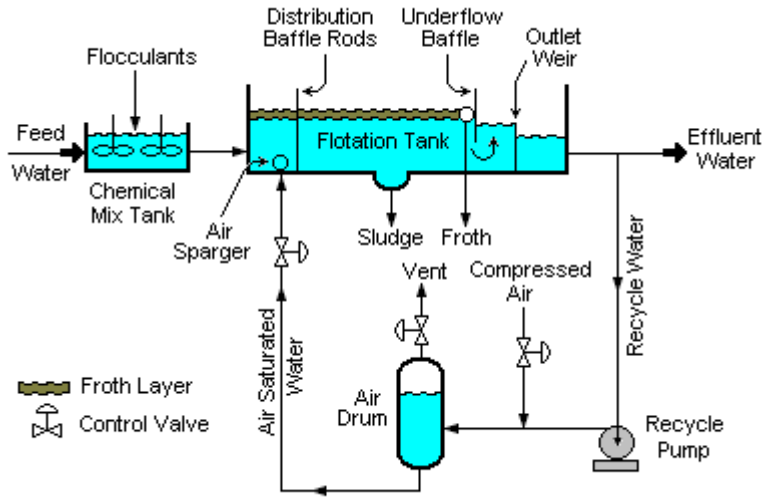

Figure 12 (Courtesy of Mbeychok)

DAF Unit

Secondary Treatment

- *Trickling Filter:* Process by which wastewater trickles over media that provide the opportunity for the formation of slimes and biomass which contain organisms that feed upon and remove waste from the water being treated.

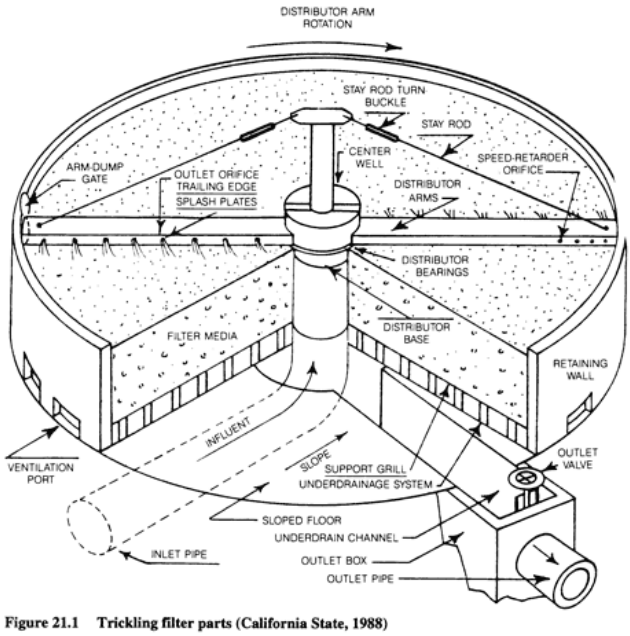

Figure 13 (Courtesy of web.deu.edu.tr/atiksu/ana52/biofilm2.html)

Figure 14 (Courtesy of City of Portland)

- *Activated Sludge:*
  - *Oxidation Ditch:* Modified form of the activated sludge process where wastewater is treated in large round or oval ditches with one or more horizontal aerators, usually brushes.

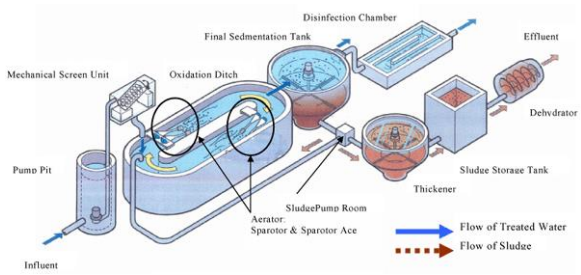

Figure 15 (Courtesy of Hitachi Oxidation ditch system)

Figure 16 (Courtesy of wis-ni.com)

  - *Diffused or dispersed aeration:* Injection of air or oxygen below the surface of the wastewater to enhance the oxygen supply to the activated sludge process and to mix aerobic components. Target DO of 2.0 to 4.0 mg/L.

Figure 17 (Courtesy of Ecosafe Solutions)

  - *Pure oxygen:* An activated sludge process where O_2 is separated from air to produce high-purity O_2. O_2 is introduced to the wastewater by a diffuser or mechanical agitation. This process takes place in a gas tight enclosure.

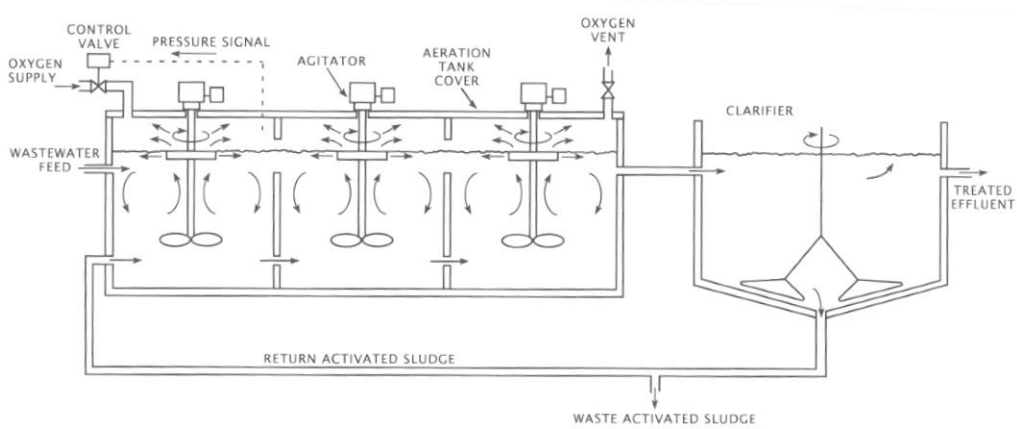

Fig. 2.3 Schematic diagram of pure oxygen system with surface aerators (3 stages shown)
(Permission of Union Carbide Corporation)

Figure 18 (Courtesy of Union Carbide Corporation)

- *Sequencing Batch Reactor (SBR):* An activated sludge process where aeration, sedimentation, and clarification takes place in one tank through sequencing stages.

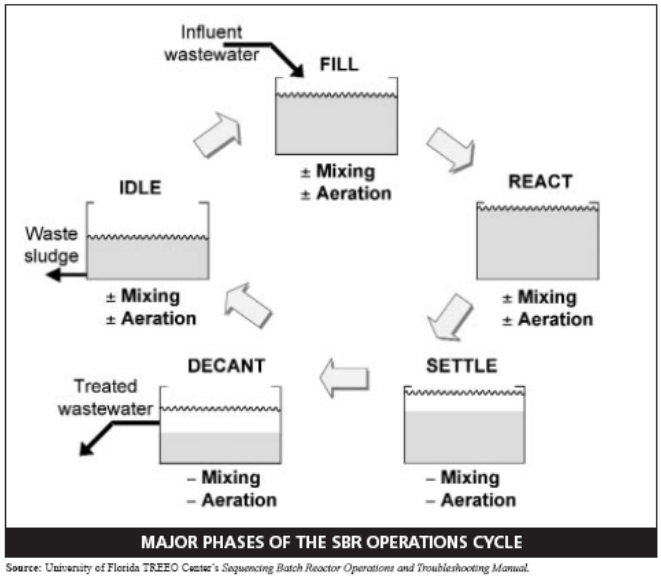

Source: University of Florida TREEO Center's *Sequencing Batch Reactor Operations and Troubleshooting Manual.*

Figure 19 (Courtesy of University of Florida TREEO Comtec)

- *Intermittent Cycle Extended Aeration System (ICEAS):* A variation of the SBR process where there is continuous inflow in a single basin, even during settling and decant phases of the operating cycle.

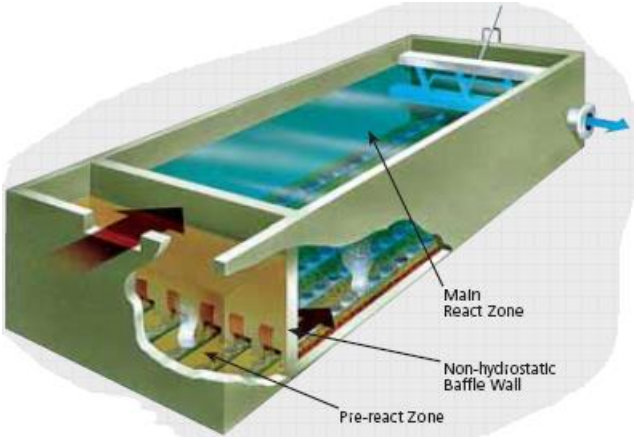

Figure 20 (Courtesy of Xylem, Inc.)

- *Contact Stabilization:* Return activated sludge (RAS) is fed to the head of the biological reactor and the influent wastewater is added downstream of the point of sludge addition.

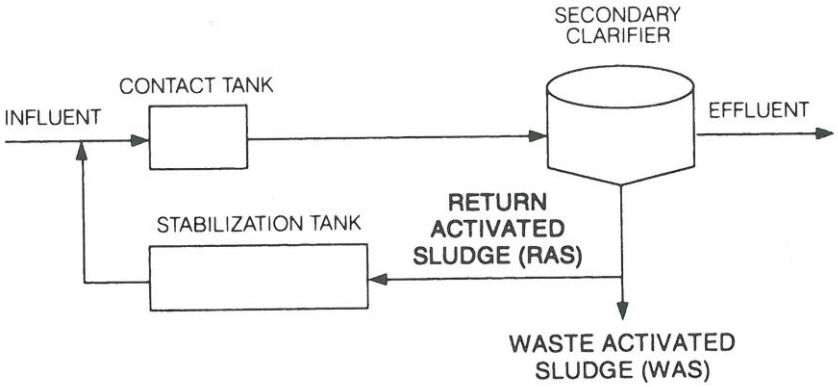

Figure 21 (Courtesy of Operator of Municipal Wastewater Treatment Plants Vol. II Sixth Ed.)

- *High Rate Mode:* An activated sludge plant that is being operated at the highest loading of food to microorganisms (sludge age ranges 0.5 to 2 days).

- *Rotating Biological Contactor (RBC):* RBCs have a rotating "shaft" surrounded by plastic disc called media. The shaft and media together are called the drum. A biological slime grows on the media when conditions are suitable. The microorganisms that make up the slime stabilize the waste products by using the organic material in the wastewater for growth and reproduction.

Figure 21 (Courtesy of Skaneateles Wastewater Treatment Plant)

- *Activated Bio-filter:* This process uses a lightly loaded trickling filter with high-rate media. Biological or activated solids are recycled from the bottom of the secondary clarifier and returned to the trickling filter.

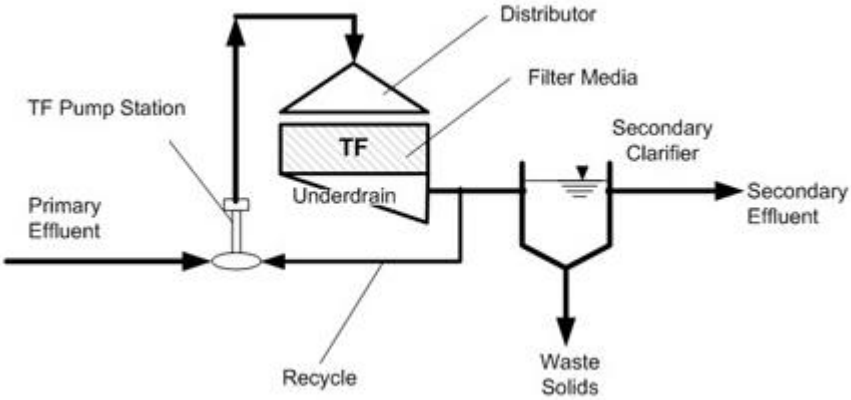

Figure 22 (Courtesy of Fixed Film Forum)

- *Stabilization Pond/Lagoon:* Shallow pond used for the treatment of wastewater. Ponds can be non-aerated or aerated.

Figure 23 (Courtesy of NPS photo's Wind Cave National Park)

Figure 24 (Courtesy of University of British Columbia)

Non-aerated Lagoon Aerated Lagoon

- *Secondary Clarifier:* A clarifier that is located after a biological treatment process.

Advanced Waste Treatment

- *Polishing Pond:* Ponds that are used in series after a trickling filter plant, thereby, giving tertiary treatment.
- *Effluent Flow Equalization:* Use of an equalization tank to prevent surges in effluent discharges.
- *Chemical and Physical Treatment:* Wastewater treatment using both chemical and physical processes. For example, screening, sedimentation, and filtration are "physical" means of treatment; coagulation and precipitation are "chemical."
- *Ion Exchange:* Use of an ion exchange resins such as zeolites to remove ammonia.

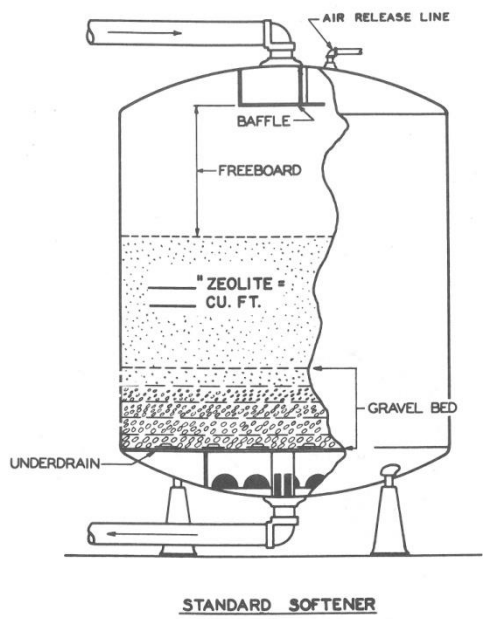

Figure 25 (Courtesy of Minnesota Rural Water Association)

- *Granular Media Filtration:* Use of filter media such as sand, anthracite, or gravel, for the separation of solids in the wastewater.
- *Membrane Filtration:* Use of membranes such as nanofilters and reverse osmosis, for the treatment of wastewater.

RO Unit

Figure 26 (Courtesy of Degremont technologies))

- ***Electrodialysis (ED):*** **An electrochemical separation** process in which ions are transferred through selective ion exchange membranes from one solution to another by means of a DC voltage.
- *Electrodialysis Reversal (EDR):* Similar to ED but the polarity is reversed periodically to move ions in the opposite direction.

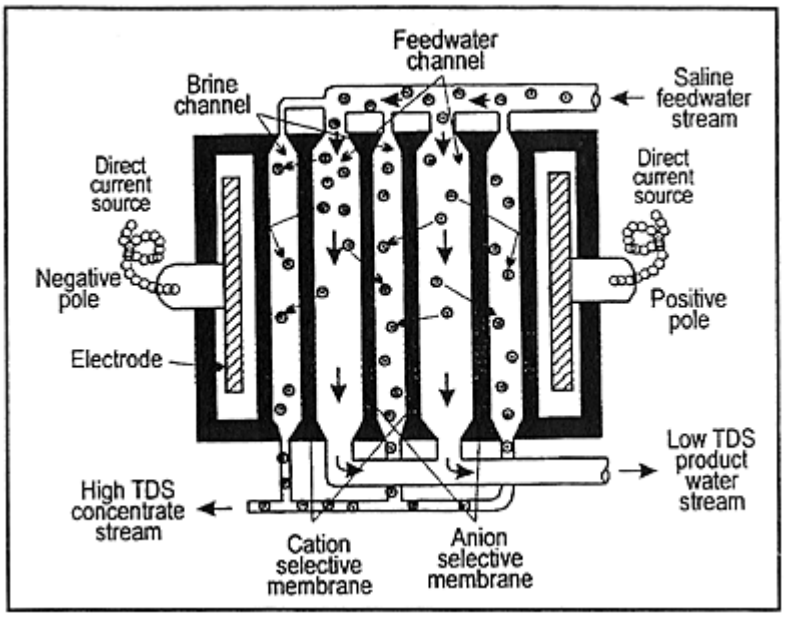

Figure 27 Courtesy of United Nations Environment Programme)

- *Biological Nutrient removal (BNR):* The process by which total nitrogen and total phosphate are removed from wastewater through the use of microorganisms.
- *Nitrification:* Oxidation of ammonia to nitrite and nitrate.
    - *Extended Aeration:* Nitrification using the extended aeration process
- *Chemical Precipitation of Phosphorus:* Typically, lime is used to precipitate phosphorus. This requires lime feeding systems, mixing and flocculation areas, chemical clarification for sedimentation, and the proper pumps and piping for removal of lime-phosphorus sludge.
- *pH Adjustment:* Addition of chemicals to adjust the pH of the wastewater.
- *Activated Carbon Columns or Beds:* The use of activated carbon as a media to remove organic constituents from wastewater through adsorption.

In-plant Odor Control

- *Biofilter:* Use of naturally occurring microorganisms to treat air containing such odorous substances as hydrogen sulfide, reduced sulfur compounds, and volatile organic compounds (VOCs). Microorganisms reside on the surface of the biofilter media and only require irrigation water and small quantities of nutrient (for some applications). Microorganisms consume these odorous contaminants for energy and, in the process, cleanse the air. Media can be sea shells, perlite, mineral based,
- *Adsorption w/ Activated Carbon or another Adsorbent:* Use of an air collection system that includes activated carbon beds to adsorb the foul odors.

- *Wet Scrubber:* Provides contact between odorous air, water, and chemicals to provide oxidation or entrainment of the odorous compounds. The odorous compounds are absorbed into the scrubber liquid, where they are oxidized and/or removed from the scrubber as an overflow or blowdown stream.
- *Thermal Deactivation w/ Catalytic Process:* Combustion of odorous gases. The optimal temperature of combustion is greater than 1,500°F; however, with a use of a catalyst this temperature can be reduced.
- *Odor-Reducing Sprays:* The use of a masking agent or chemical distributed by sprayers to impart a pleasant odor when mixed with the odorous compound.

Sludge Thickening & Dewatering

- *Sludge Decant Tank:* Similar to secondary clarifiers, sludge decant tanks allow collected settled material to be removed by scrapers or flights.
- *Gravity Thickener Basin:* Usually a circular basin, resembling a circular clarifier, where solids that are heavier than water settle to the bottom and then are compacted by the weight of other solids settling on top of it. The resulting compacted sludge is raked to the sludge hopper where it is pumped by a pump to an area where they can be disposed of. The effluent will overflow the weir and return back to the treatment train.

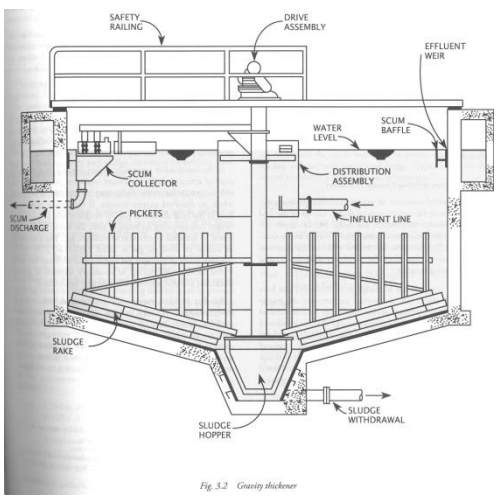

Figure 28 (Courtesy of Advance Waste Treatment Office of Water Programs CSU Sacramento)

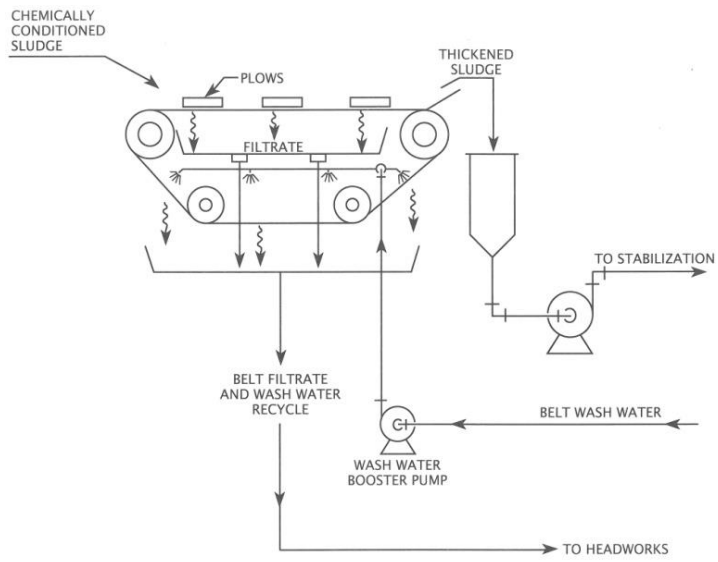

Figure 29 (Courtesy of Advance Waste Treatment Office of Water Programs CSU Sacramento)

- *Gravity Belt Thickener:* Chemically conditioned sludge (usually treated with polymer) is applied to the belt of the thickener where the free water from the belt drains through small holes located in the belt into a trough where it is collected and reintroduced into the treatment train. The thickened sludge is then removed from the belt to be transferred to the next sludge treatment process, usually stabilization.

- *Screw Press:* The screw press contains a conical shaped wire basket. Preconditioned sludge enters one end of the screw press. As the sludge travels through the press, free water drains through the wire basket. The sludge is conveyed through the conical basket by a slowly turning screw. As the surface area decreases the pressure exerted on the sludge increases thereby squeezing more water out of the sludge. The dewatered sludge is discarded and the free water is reintroduced into the treatment train.

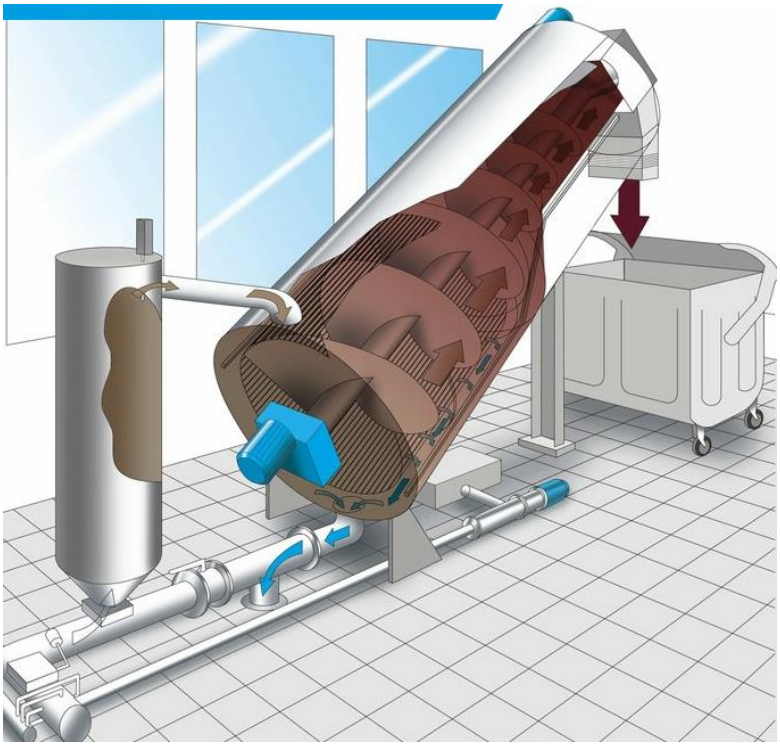

Figure 30 (Courtesy of Huber Technology)

- *Centrifuge:* Thickening of sludge by use of centrifugal forces. Sludge is fed into a rotating bowl at a constant feed rate. Centrifugal forces fling the sludge to the walls of the bowl where it is compacted and the water is extracted. The water and some fine particles exit the centrifuge via an effluent line. The three common types of centrifuges used today are (1) disc nozzle centrifuge, (2) basket centrifuge, and (3) scroll centrifuge.

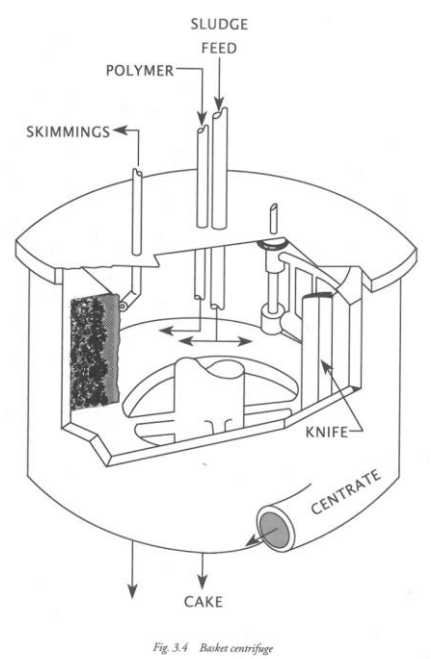

Figure 31 (Courtesy of Advance Waste Treatment Office of Water Programs CSU Sacramento)

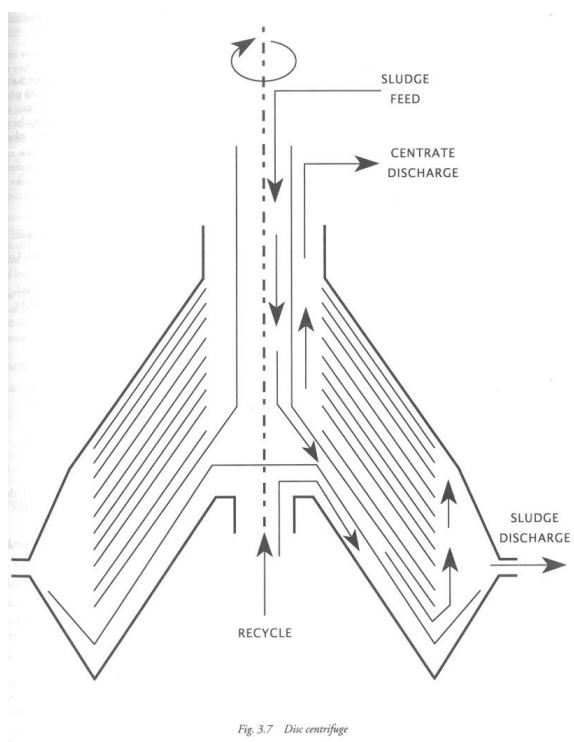

Figure 32 (Courtesy of Advance Waste Treatment Office of Water Programs CSU Sacramento)

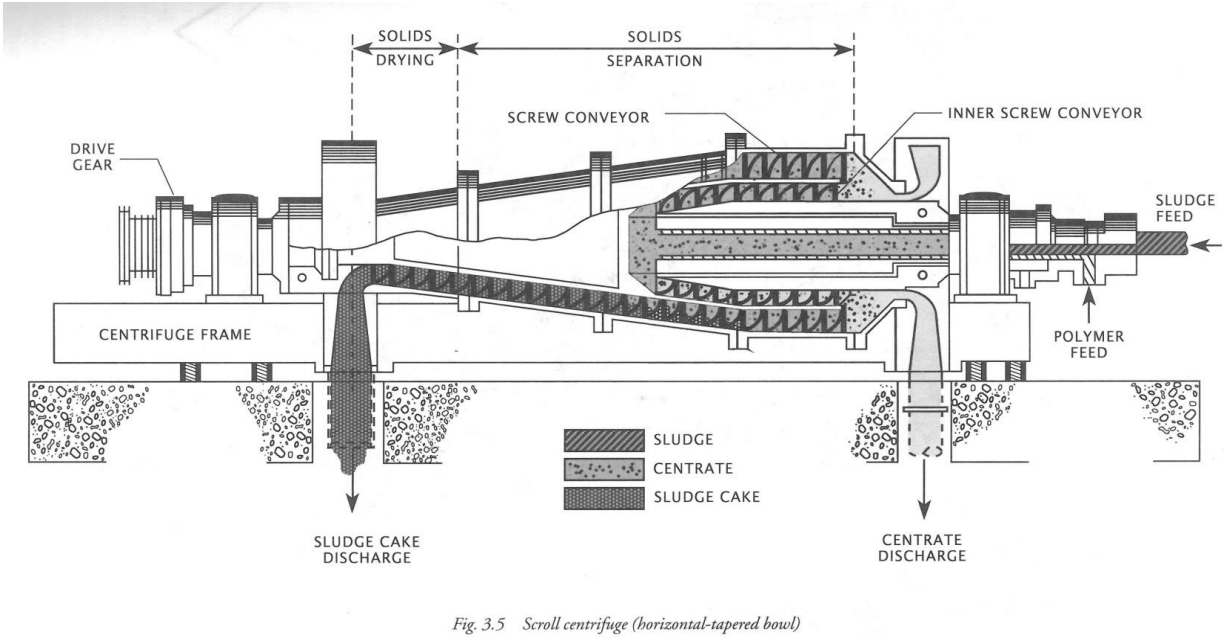

Figure 33 (Courtesy of Advance Waste Treatment Office of Water Programs CSU Sacramento 5th ed.)

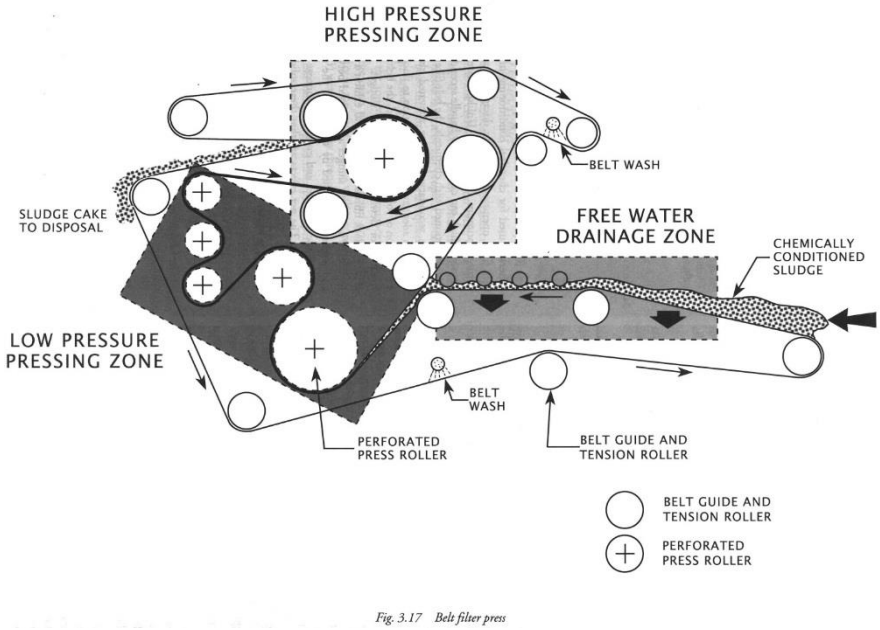

Figure 30 (Courtesy of Advance Waste Treatment Office of Water Programs CSU Sacramento 5th ed)

- *Belt Filter Press:* Preconditioned sludge first travels an area similar to the gravity belt thickener where free water is drained through perforations in the belt into a trough. Then, the sludge enters a zone where it is trapped between two endless belts where pressure is applied and water is forced from the sludge.

- *Vacuum Filter:* Preconditioned sludge is fed into a vat containing a cylindrical drum covered with a filter media. The drum is partially submerged in the vat. The drum is divided into a pick up zone which has the highest vacuum, a cake drying zone where the vacuum is decreased slightly where water is drawn from the sludge mat and discharged, and a discharge zone where the vacuum is near zero and the sludge is separated from the drum.

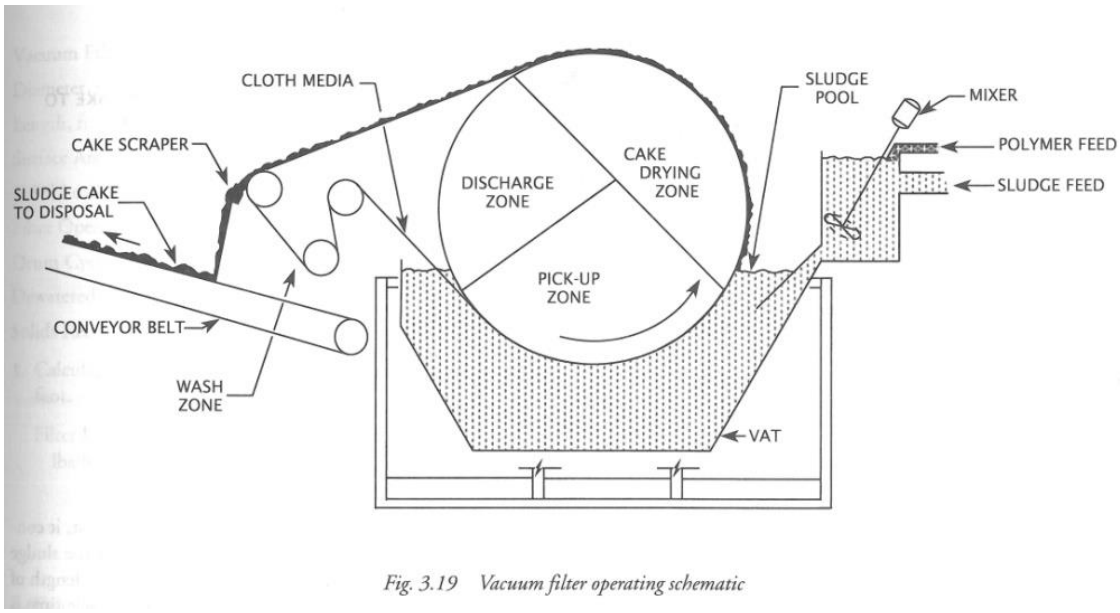

Figure 31 (Courtesy of Advance Waste Treatment Office of Water Programs CSU Sacramento 5th ed.)

- *Plate-and-Frame Press:* The press is comprised of vertical plates with filter cloth mounted on each plate that are held rigidly in a frame and pressed together. The press is operated in batch mode. Sludge is fed into the press through feed holes spanning the length of the press. Water passes through the filter cloth, collected in drain ports at the bottom of each press chamber, and discharged. The solids remain and are allowed to build up until the space between the filters fills completely with solids. The solids

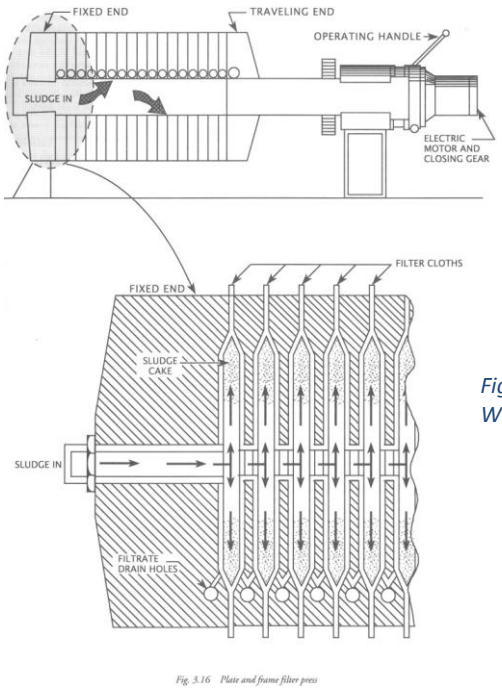

Figure 32(Courtesy of Advance Waste Treatment Office of Water Programs CSU Sacramento 5th ed.)

build up resistance to flow increases thereby compacting the solids. When the amount of flow nears zero the feed is shut off and the plates are separated. As the plates are separated, the cake will fall out of the press into a hopper or conveyor.

- *Sludge Bagger:* Typically used for small WWT plants that do not produce high volumes of sludge.

Figure 33(Courtesy of MISCO water)

Sludge is pumped into disposable polypropylene bags that are made of porous material. The sludge is dewatered via combination of gravity and pressurization. Once the bags are full they can be stacked to further dewater the sludge.

- *Drying Beds:* Sludge can be dried by evaporation using sand drying beds or surfaced sludge drying beds.

Sludge Stabilization and Conditioning

- *Anaerobic Digestion:* A multistage biochemical process that stabilizes sludge in an anaerobic environment resulting in the production of methane and carbon dioxide gases. This process can occur

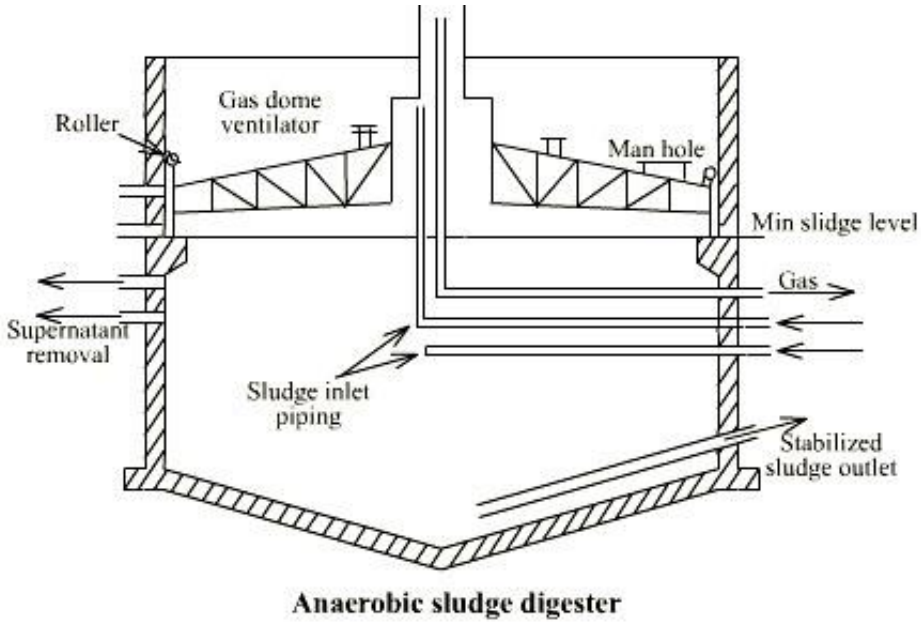

Figure 34(National Programme on Technology Enhanced Learning)

heated in which the sludge is fermented in tanks at 131° F or unheated at around 98° F.

- *Aerobic Digestion:* A biological treatment process that uses aeration to stabilizes sludge. Similar to the principle of extended aeration ion the activated sludge process.

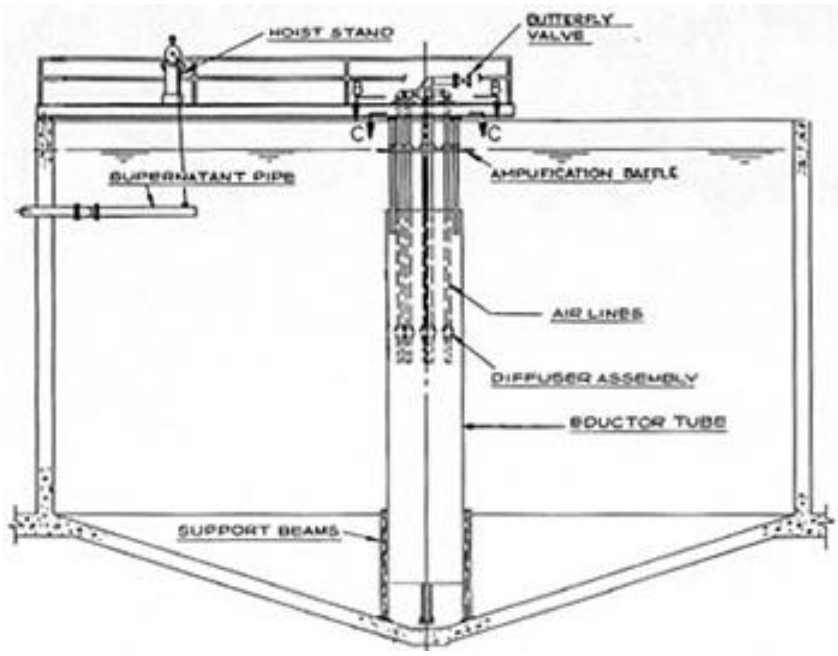

Figure 35 (Courtesy of WriteOpinions.com)

- *Wet Oxidation:* The oxidation of soluble or suspended components in wastewater using oxygen as the oxidizing agent. The oxidation reactions occur at temperatures of 275° F to 608° F and pressures from 150 to 3200 psig. The wet air oxidation (WAO) process can pretreat difficult wastewater streams, making them amenable for discharge to a conventional biological treatment plant for polishing.

Figure 36 (Courtesy of Siemens Inc.)

- *Chemical Stabilization with Lime:* A batch or continuous process where lime is added to the sludge and then mixed in a tank for 30 minutes at a pH of 11.5 to 12. The process of lime stabilization produces unfavorable conditions which destroys pathogenic and nonpathogenic bacteria.

- *In-vessel Composting:* The decomposition of organic matter combined with a bulking agent in an enclosed reactor.

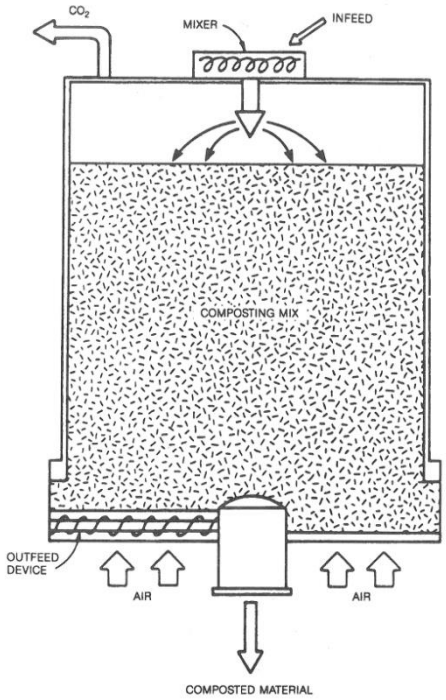

FIGURE 32.4 Silo type in-vessel composting system.

Figure 37 (Operation of Municipal Wastewater Treatment Plants Vol. III Solids Processes 6th ed.)

- *Static Pile Composting:* The decomposition of organic matter combined with a bulking agent using a fixed pile. Typically, a perforated aeration header is located in the base of the pile to provide air distribution for aerobic decomposition.

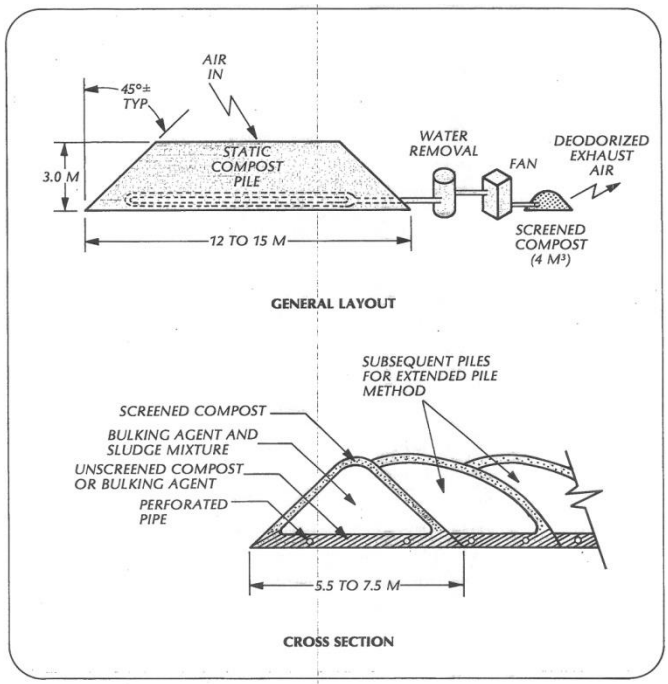

Figure 1. Typical Static Compost Pile for 40 Cubic Meters of Dewatered Sludge

Figure 38 (Courtesy of Advance Waste Treatment Office of Water Programs CSU Sacramento 3rd ed.)

Solids Disposal

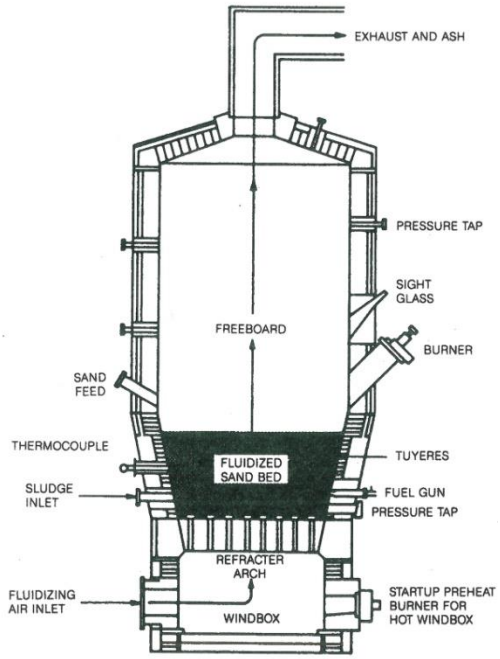

FIGURE 32.12 Fluidized-bed incinerator schematic.

Figure 39 (Operation of Municipal Wastewater Treatment Plants Vol. III Solids Processes 6th ed.)

- *Incineration:* The conversion of dewatered wastewater solids by combustion to ash, carbon dioxide, and ash.
- *Land Application:* Disposal of sludge on agricultural or nonagricultural lands.
- *Sludge Lagoon:* The use of dedicated facultative lagoons to dispose of sludge.
- *Off-site Disposal:* The sludge is taken to an off-site location for disposal.

Disinfection

- *Chlorination:* An oxidation process that is initiated through the addition of chlorine. In chlorination, chlorine oxidizes microbiological material, organic compounds, and inorganic compounds.
    - *Powered or liquid hypochlorites.*
        - Chlorination using solutions of calcium hypochlorite ($Ca(OCl)_2$) or sodium hypochlorite (NaOCl).

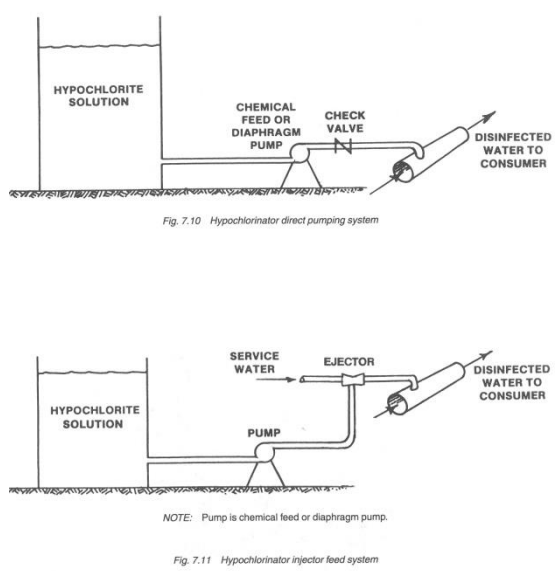

Figure 40 [Courtesy of Water Treatment Plant Operation, A Field Study Program Vol. I, 6th ed.)

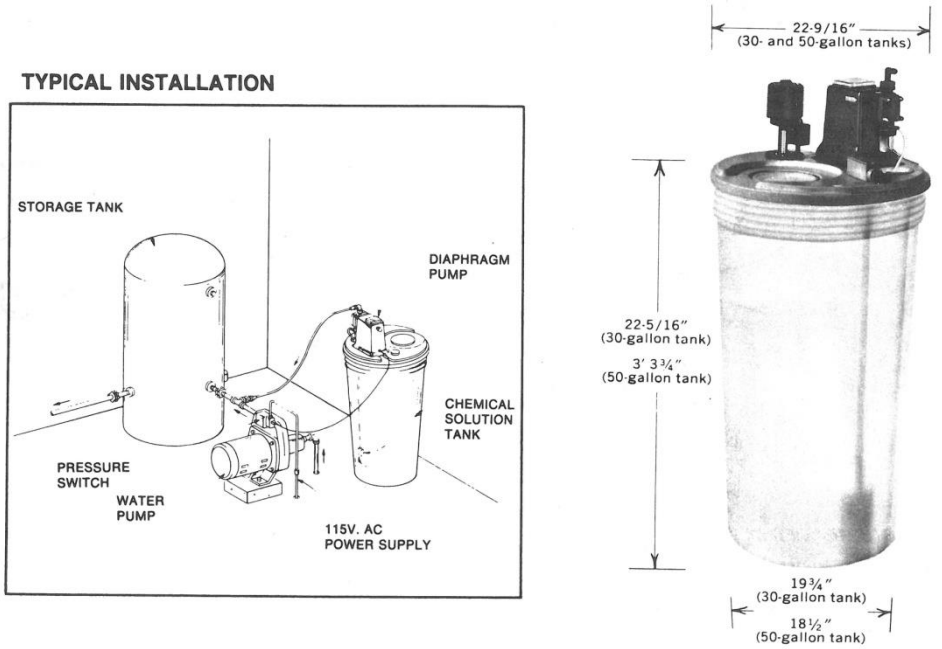

Fig. 7.7 Typical hypochlorinator installation
(Permission of Wallace & Tiernan Division, Pennwalt Corporation)

Figure 41 (Courtesy of Wallace & Tiernan Division, Pennwalt Corporation)

- *On-site generation of hypochlorites:* Hypochlorites can be generated on-site by combining salt, water and electricity.
  $NaCl + H_2O \rightarrow NaOCl + H_2$

Figure 42 (Courtesy of ClorTec On-Site Sodium Hypochlorite Generating Systems)

Gas chlorine: Gaseous molecular chlorine (Cl_2), when introduced into water, is converted into hypochlorous acid (HOCl) and the hypochlorite ion (OCl^-); the ratio of the two substances is dependent on the pH of the solution ($HOCl \Leftrightarrow OCl^- + H^+$).

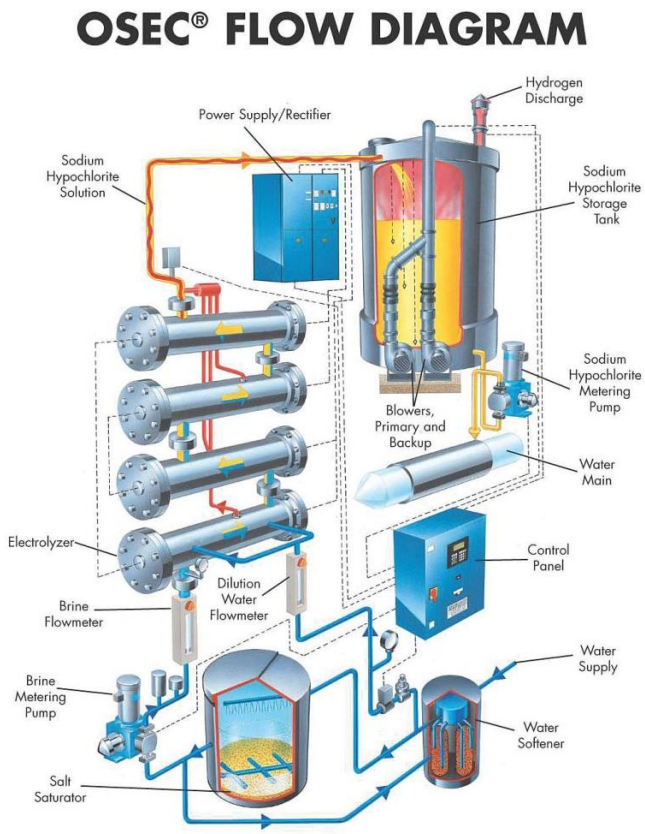

Figure 43(Courtesy of SIEMENS Inc.)

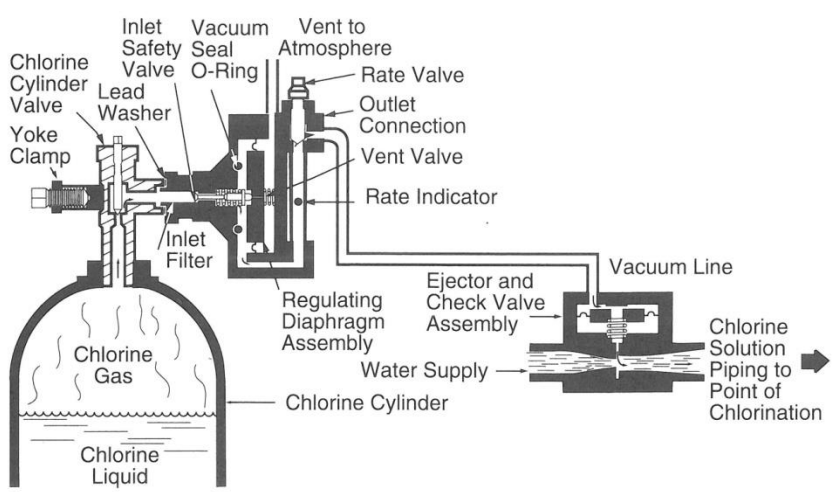

Courtesy of Severn Trent Services

FIGURE 7–27 Schematic of direct-mounted gas chlorinator

Figure 44 (Courtesy of Severn Trent Services)

- *Chlorination using tablets:* Tablets usually containing 70% available chlorine are placed a feeder which disinfect the water.

Figure 45 (Courtesy of Global Treat Inc.)

Figure 46(Courtesy of Clean Pool and Spa)

- *UV Light:* The use of a UV light system to conduction disinfection.

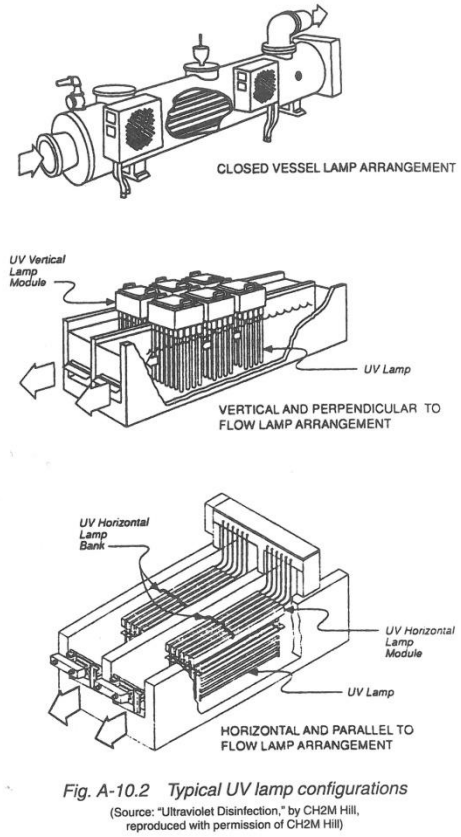

Figure 47 (Courtesy of CH2M Hill)

- *Ozonation:* The application of ozone to disinfect the wastewater.

Figure 48 (Spartan Environmental Technologies)

- *Dechlorination:* The removal of chlorine from wastewater effluent. Chlorine needs to be removed because it is toxic to fish and other aquatic life. Typically, sulfur dioxide is used for dechlorination and can be introduced to the wastewater effluent in gas, liquid, powered, or tablet form.

Effluent Discharge

- *Plant Pumping of Effluent:* The wastewater effluent is pumped from the treatment plant to its final destination.
- *Effluent Aeration:* The wastewater effluent is aerated prior to discharge.