CITY OF CHEFORNAK, ALASKA
2011 LAGOON ACCESS BOARD ROAD
AREA IA IMPROVEMENTS PROJECT

Design funded by Indian Health Service Grant AN10-NQ2
Clean Water Act funds / VSW Project 11AM89

ISSUED FOR AGENCY APPROVAL, MARCH 2011

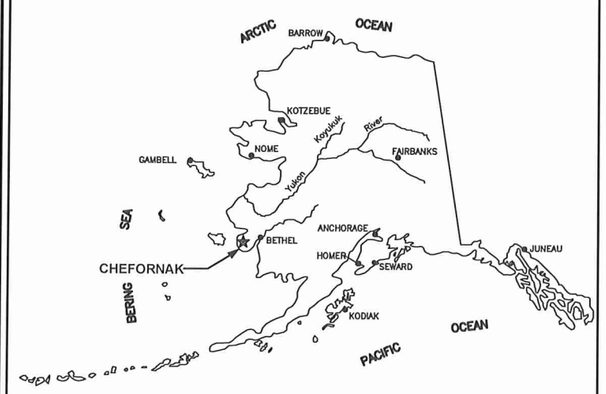

PROJECT LOCATION

Location Map

CE2 ENGINEERS, INC.

PO BOX 232946 ANCHORAGE, AK 99523 PH: 907-349-1010 FAX: 907-349-1015

STATE OF ALASKA 49TH Lloyd A. Parson NO. CE 9592 REGISTERED PROFESSIONAL ENGINEER 3/28/11

Consultant

RECORD DRAWING CERTIFICATE

THESE DRAWINGS REFLECT RECORDED INFORMATION OBTAINED DURING CONSTRUCTION.
INFORMATION PROVIDED HEREIN IS ACCURATE TO THE BEST OF MY KNOWLEDGE.

NAME DATE

Construction Foreman		–
FINAL DESIGN	(Date)	–
ADEC APPROVAL	(Date)	
Construction Period	(From) –	(To) –
As-Builts	(Date)	

SHEET INDEX

No. Title

COVER SHEET AND SHEET INDEX
G1.1 NOTES AND SURVEY CONTROL
G1.2 KEY MAP

CIVIL DRAWINGS:
C1.1 PLAN AND PROFILE
C1.2 PLAN AND PROFILE

STRUCTURAL DRAWINGS:
S1.1 DETAILS
S1.2 DETAILS
S1.3 DETAILS
S1.4 DETAILS

DESIGN DESIGNATIONS

ADT (2011)	<50
ADT (2031)	<250
DESIGN SPEED (V) (MPH)	10
RECOMMENDED SPEED (Vr) (MPH)	10
% TRUCKS	N/A
DIRECTIONAL SPLIT (D)	50/50
DHV (20%)	<20
MAX. GRADE (G)	1.67%
CURRENT POPULATION (2010 DCCED)	418
DESIGN POPULATION (PROJECTED 20 YEAR)	621

G:\ACAD\CHEFORNAK\2010 Lagoon Access Boardwalk Improv\COVER.dwg, 3/28/2011 5:52:13 PM, lpersson, \\CE2MAIN\LANIER MP C2050/LD520C PCL 6

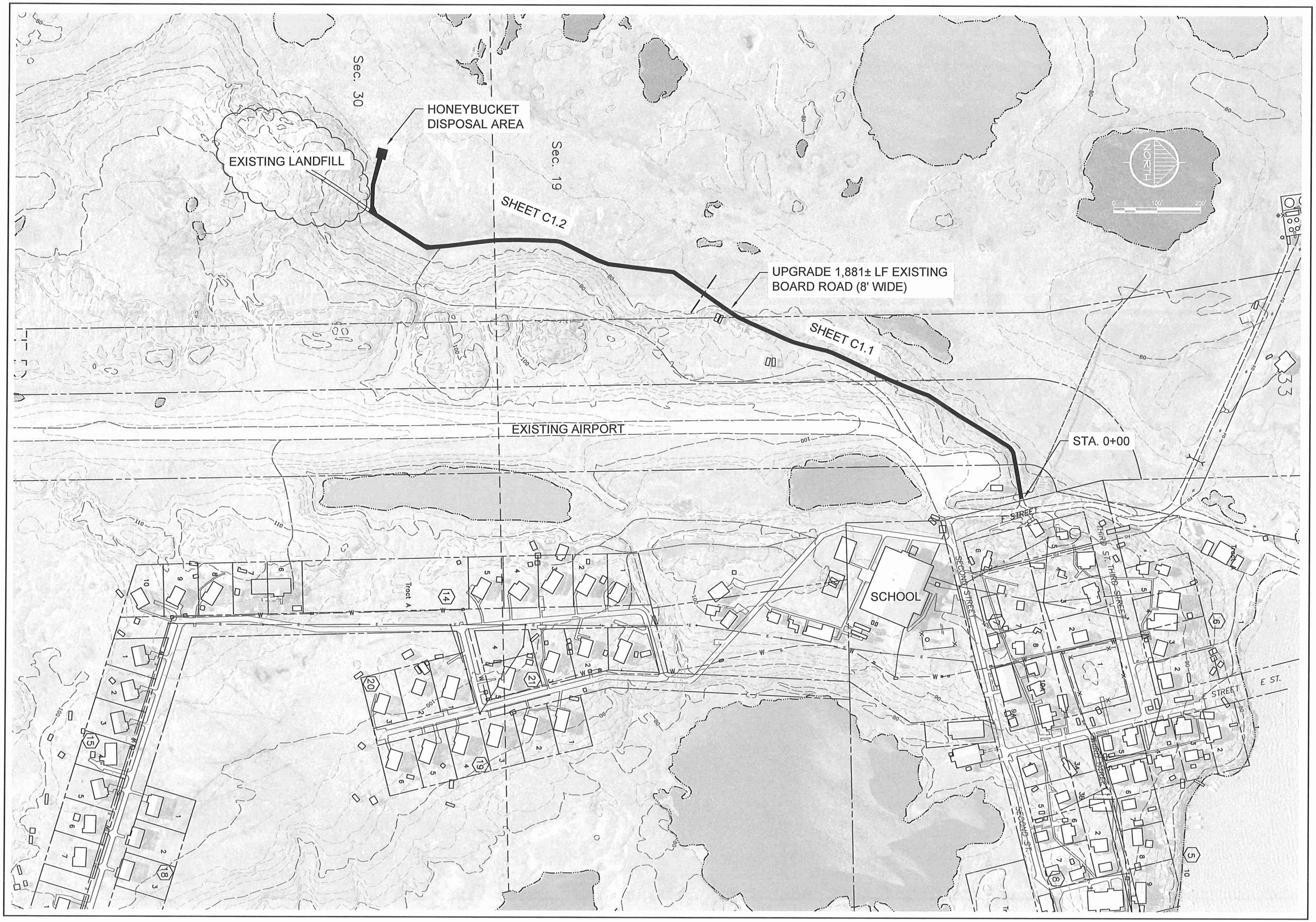

G:\ACAD\CHEFORNAK\2010 Lagoon Access Boardwalk Improv\G1.2.dwg, 3/25/2011 12:27:51 PM, cmerz, \\Ce2main\LANIER MP C2050/LD520C PCL 6

RECORD DRAWING CERTIFICATE

THESE DRAWINGS REFLECT RECORDED INFORMATION OBTAINED DURING CONSTRUCTION. INFORMATION PROVIDED HEREIN IS ACCURATE TO THE BEST OF MY KNOWLEDGE.

NAME DATE

SCALE: AS SHOWN

BAR IS ONE INCH ON ORIGINAL DRAWING

0 1"

IF NOT ONE INCH ON THIS SHEET, ADJUST SCALES ACCORDINGLY

CONSTRUCTION RECORD

FIELD BOOK

STAKING

FOREMAN

AS-BUILT

INSPECTOR

STATE OF ALASKA 49TH Lloyd A. Ferguson REGISTERED PROFESSIONAL ENGINEER

2010 LAGOON ACCESS BOARD ROAD IMPROVEMENTS

KEY MAP

CHEFORNAK, ALASKA

CE2 ENGINEERS, INC.

PO BOX 223946 ANCHORAGE, AK 99523 PH: 907-349-1010 FAX: 907-349-1015

REVISION	BY	DATE

Project No. ____

Date JUNE 2010

Designed LAP

Drawn ____

Approved LAP

Sheet No. G1.2

SHEET ____ OF ____

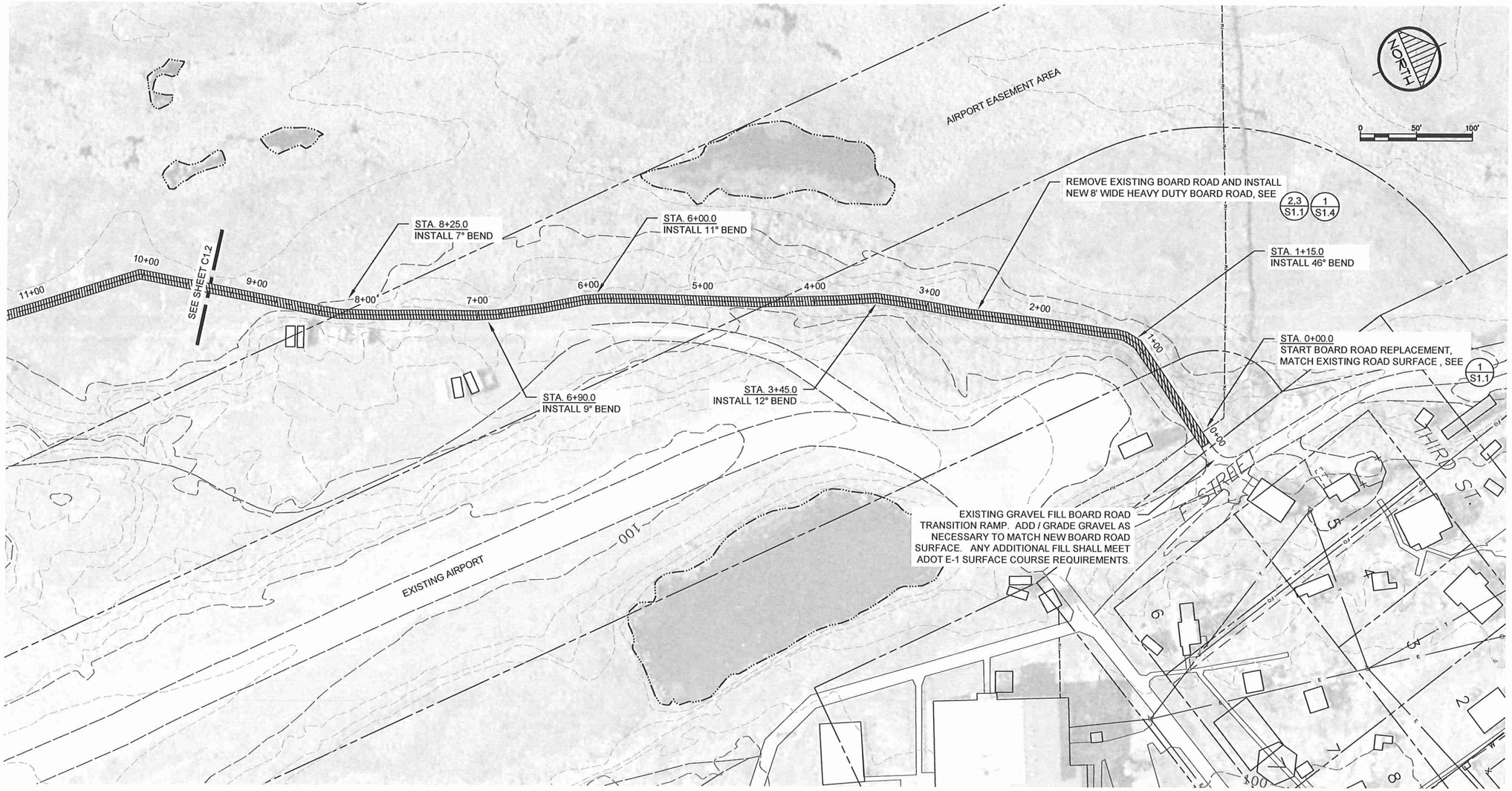

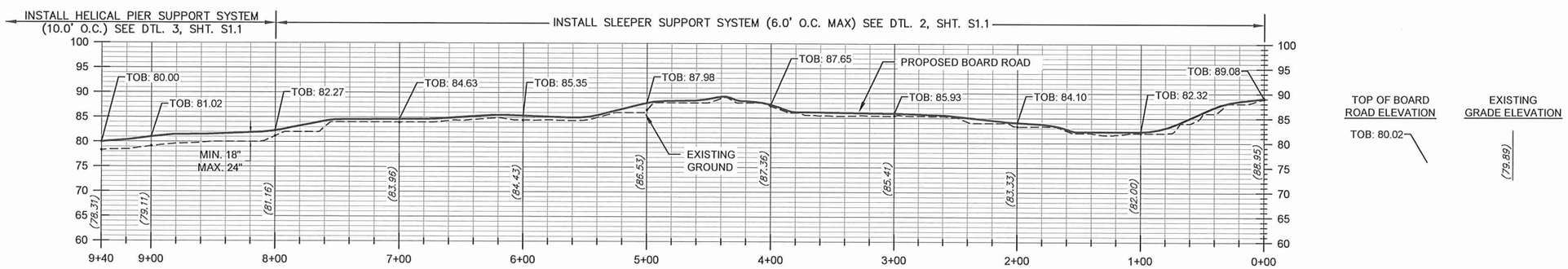

RECORD DRAWING CERTIFICATE

THESE DRAWINGS REFLECT RECORDED INFORMATION OBTAINED DURING CONSTRUCTION. INFORMATION PROVIDED HEREIN IS ACCURATE TO THE BEST OF MY KNOWLEDGE.

NAME DATE

SCALE: AS SHOWN

BAR IS ONE INCH ON ORIGINAL DRAWING

0 1"

IF NOT ONE INCH ON THIS SHEET, ADJUST SCALES ACCORDINGLY

CONSTRUCTION RECORD

FIELD BOOK

STAKING

FOREMAN

AS-BUILT

INSPECTOR

STATE OF ALASKA
REGISTERED PROFESSIONAL ENGINEER
LEON A. PARKER
CE 9969

2010 LAGOON ACCESS BOARD ROAD IMPROVEMENTS

PLAN AND PROFILE

CHEFORNAK, ALASKA

CE2 ENGINEERS, INC.
PO BOX 222546 ANCHORAGE, AK 99523 PH: 907-346-1010 FAX: 907-346-1015

REVISION	BY	DATE

Project No. ____
Date JUNE 2010
Designed LAP
Drawn CM
Approved LAP

Sheet No. C1.1

SHEET ____ OF ____

G:\ACAD\CHEFORNAK\2010 Lagoon Access Boardwalk Improv\C1.1_C1.2.dwg, 3/25/2011 12:18:05 PM, cmerz, LANIER MP C2050_LD520C PCL 6.pc3

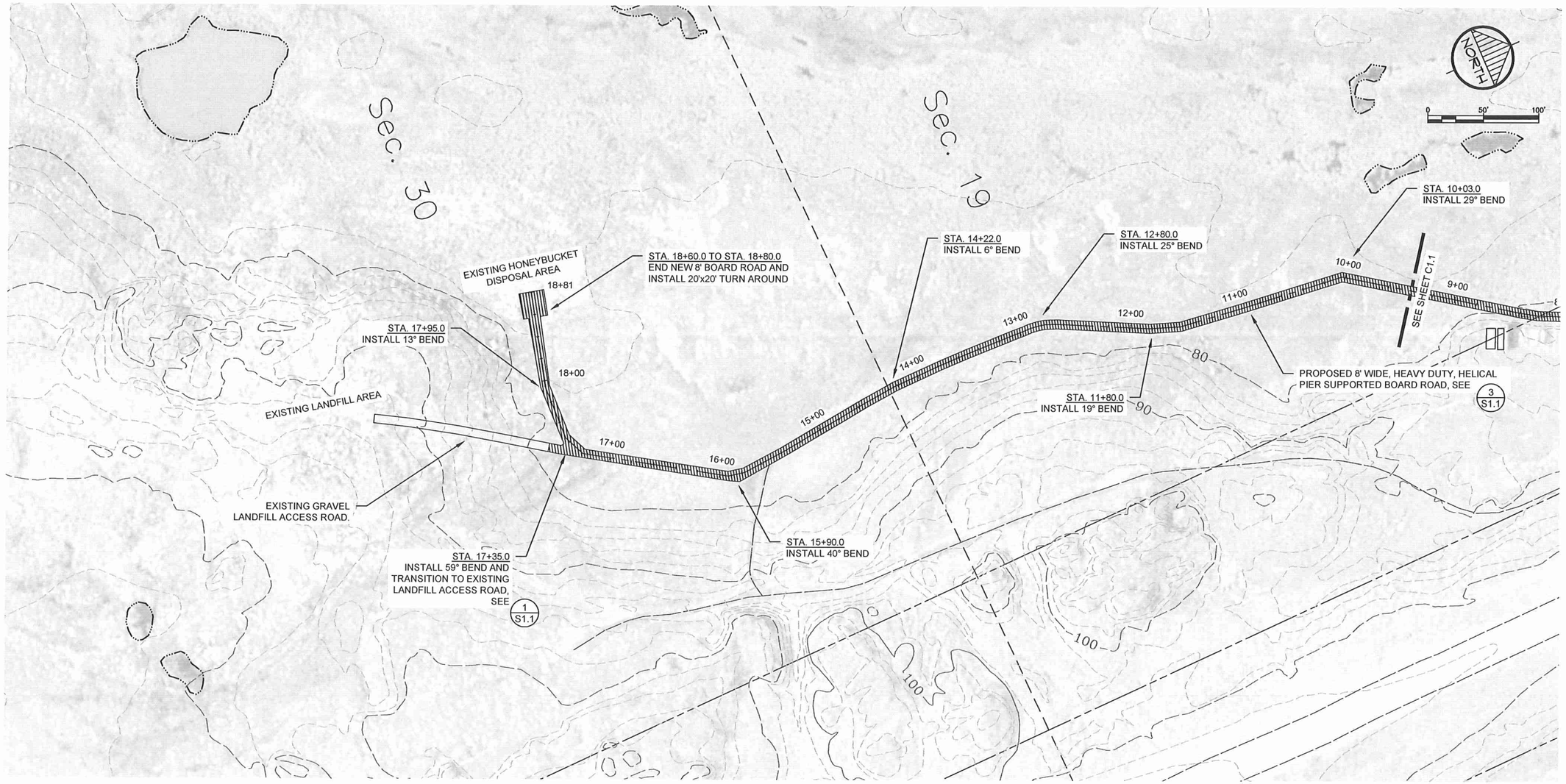

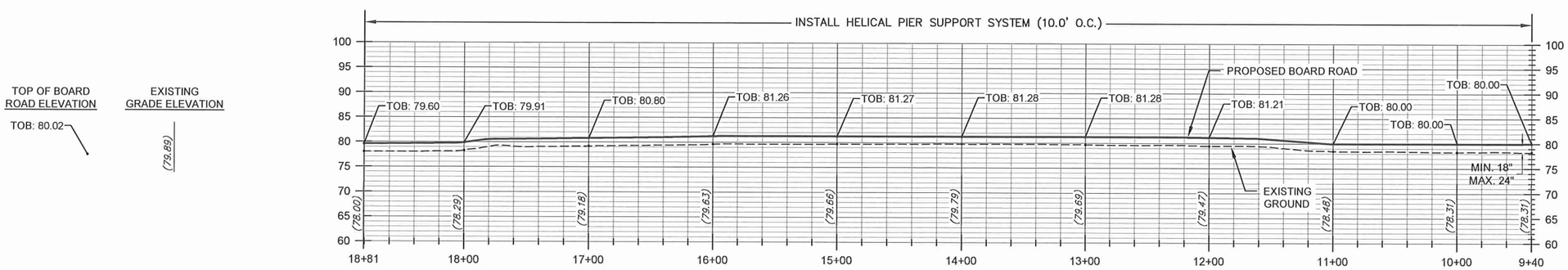

RECORD DRAWING CERTIFICATE

THESE DRAWINGS REFLECT RECORDED INFORMATION OBTAINED DURING CONSTRUCTION. INFORMATION PROVIDED HEREIN IS ACCURATE TO THE BEST OF MY KNOWLEDGE.

NAME DATE

SCALE: AS SHOWN

BAR IS ONE INCH ON ORIGINAL DRAWING 0 1"

IF NOT ONE INCH ON THIS SHEET, ADJUST SCALES ACCORDINGLY

CONSTRUCTION RECORD

FIELD BOOK
STAKING
FOREMAN
AS-BUILT
INSPECTOR

REGISTERED PROFESSIONAL ENGINEER
STATE OF ALASKA
LUKE A. PARSONS
9/25/2012

2010 LAGOON ACCESS BOARD ROAD IMPROVEMENTS

PLAN AND PROFILE

CHEFORNAK, ALASKA

CE2 ENGINEERS, INC.
PO BOX 220246 ANCHORAGE, AK 99522 PH: 907-348-1010 FAX: 907-348-1015

REVISION	BY	DATE

Project No.
Date JUNE 2010
Designed LAP
Drawn CM
Approved LAP

Sheet No. C1.2

SHEET ____ OF ____

G:\ACAD\CHEFORNAK\2010 Lagoon Access Boardwalk Improv\C1.1_C1.2.dwg, 3/25/2011 12:22:30 PM, cmerz, LANIER MP C2050_LD520C PCL 6.pc3

FILLET SUPPORT:

SLEEPER SUPPORTED BOARDWALK: USE SLEEPER SUPPORTS AND DECKING FASTENERS AS SHOWN IN 2/S1.1

HELICAL PIER SUPPORTED BOARDWALK: USE A 4x12 BEAM BETWEEN SUPPORTS AND A 3x3x¼ GALVANIZED ANGLE. CONNECT DECKING TO LEDGER ANGLE AS SHOWN IN 3/S1.1

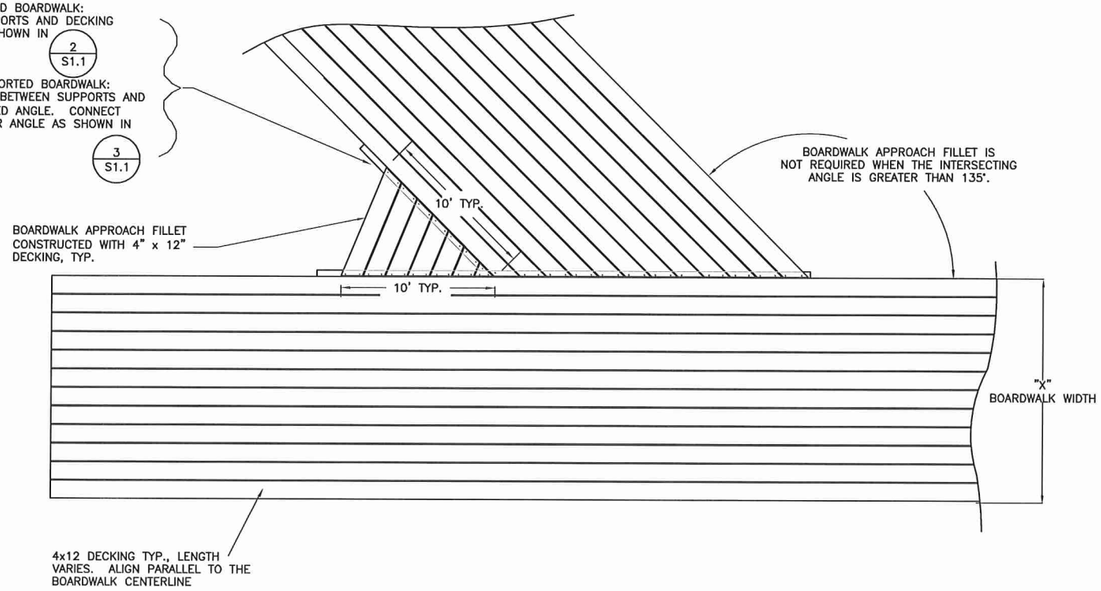

1/S1.1 TYPICAL BOARDWALK DECKING LAYOUT
SCALE 1/4" = 1'=0"

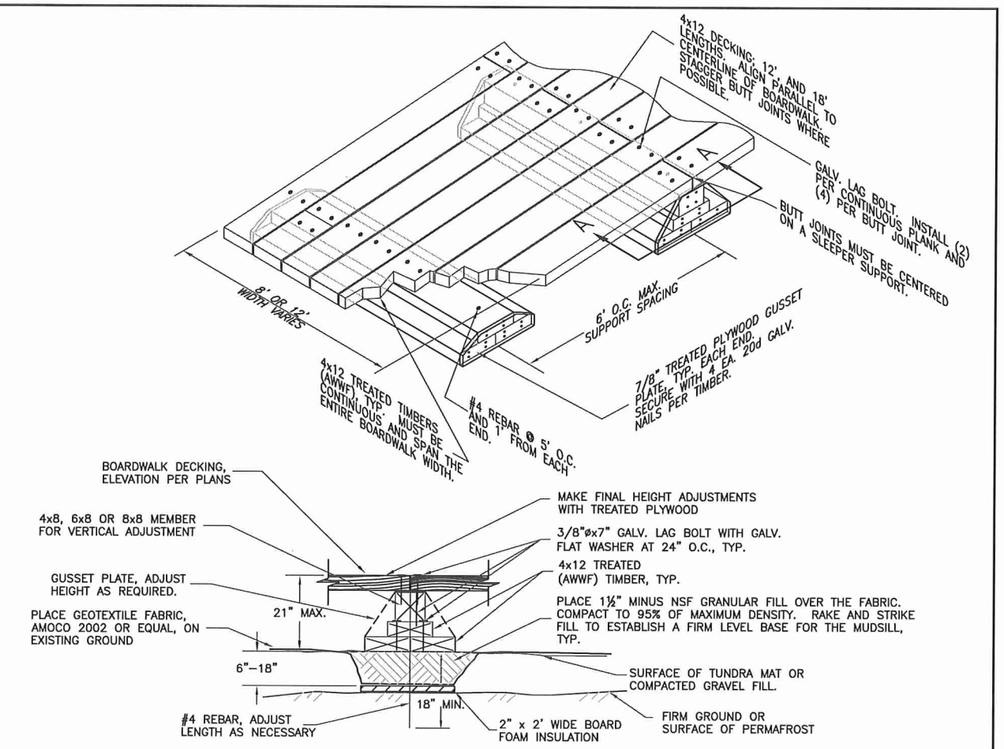

SECTION A–A : FOR SOFT GROUND CONDITIONS
(FOR FIRM GROUND CONDITIONS, PLACE THE MUD SILL DIRECTLY ON THE EXISTING GROUND)

2/S1.1 SLEEPER SUPPORTED BOARDWALK DETAIL
NTS

GENERAL STRUCTURAL NOTES

1. Unless noted otherwise, all construction shall conform to AASHTO Standard Specifications for Highway Bridges. In addition to dead loads, the boardwalk was designed for the following live and environmental loads:

Design Wind Speed		100 m.p.h.
Design Snow Load		30 p.s.f.
Seismic Design		Zone 1
Live Load	(Vehicle)	1500 lb. ATV or Snowmobile with 2000 lb. single axle "120 gal. water" trailer

2. Boardwalk Foundation
A foundation investigation was prepared for this project by Duane Miller and Associates. Soils in the area generally consist of a pumice bolder matrix with a thin organic mat overlaying silt. Marginal temperature permafrost as well as thawed soil conditions exist in the project area.

Self drilling helical pier supports (described below) were recommended for use in soft and wet areas. Pier supports will also be used in areas where the boardwalk deck elevation is greater than 18" above finished grade. Sleeper supports will be used in all other areas.

3. Helical Pier Supports shall be 1–3/4" square galvanized steel with 10" helix (for permafrost areas), and 8", 10", and 12" helices (for thawed areas). Pier supports shall be capable of meeting the following minimum requirements:

Torque:	10,000 Ft.–Pounds
Axial Tension:	100,000 Pounds
Axial Compression	40,000 Pounds
Galvanized after fabrication to ASTM A–153	

4. Lumber shall be Hem–Fir, Grade No. 2 or better. All wood members shall be treated with the wood preservative CCA, Cromated Copper Arsenate, with the following concentrations:
Soil Contact – 0.6 pounds per cubic foot
Above Grade – 0.4 pounds per cubic foot

5. Steel hardware and fasteners, including structural plates, shapes, bars, and assemblies, shall be galvanized in accordance with the requirements of ASTM A–123. Bolts, nuts and similar threaded fasteners shall be galvanized in accordance with ASTM A–153. Surfaces shall be thoroughly cleaned of rust and scale prior to galvanizing. Field repairs to galvanizing shall be made using "GALVINOX", GALVO–WELD", or equal.

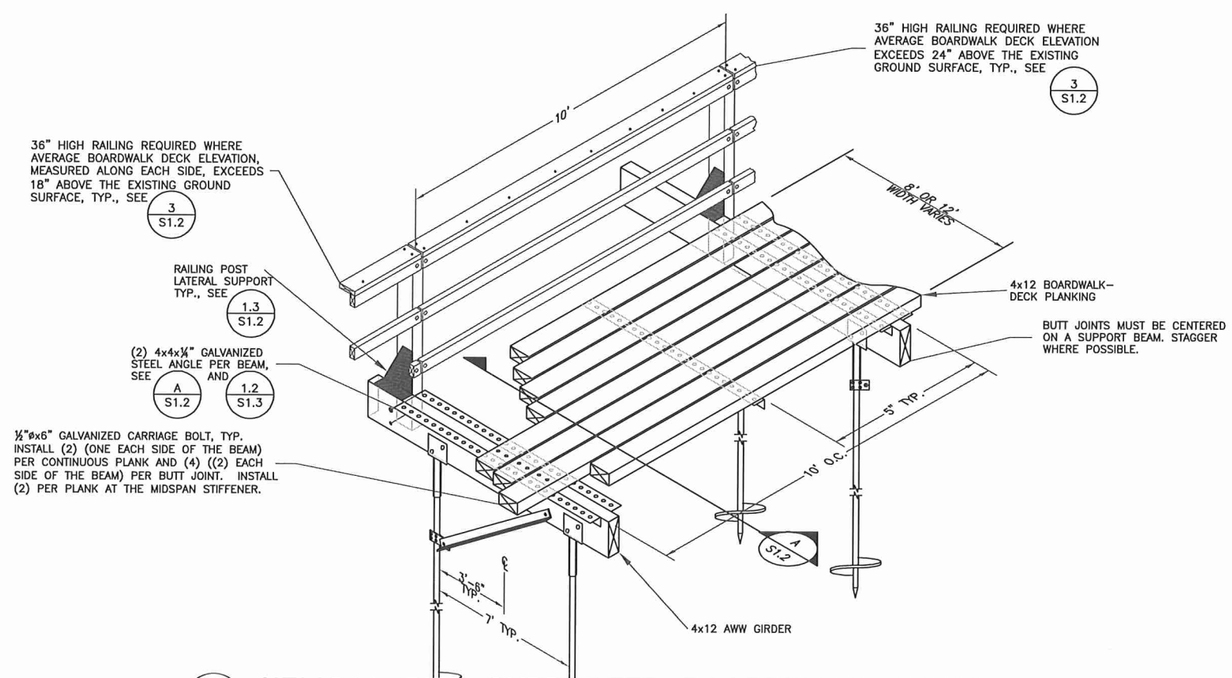

3/S1.1 HELICAL PIER SUPPORTED BOARDWALK DETAIL
SCALE 1/2" = 1'=0"

RECORD DRAWING CERTIFICATE
THESE DRAWINGS REFLECT RECORDED INFORMATION OBTAINED DURING CONSTRUCTION. INFORMATION PROVIDED HEREIN IS ACCURATE TO THE BEST OF MY KNOWLEDGE.
NAME DATE

SCALE: AS SHOWN
BAR IS ONE INCH ON ORIGINAL DRAWING 0 1"
IF NOT ONE INCH ON THIS SHEET ADJUST SCALES ACCORDINGLY

CONSTRUCTION RECORD
FIELD BOOK
STAKING
FOREMAN
AS-BUILT
INSPECTOR

REVISION BY DATE

2010 LAGOON ACCESS BOARD ROAD IMPROVEMENTS
DETAILS
CHEFORNAK, ALASKA

CE2 ENGINEERS, INC.
PO BOX 223246 ANCHORAGE, AK 99523 PH: 907-349-1015 FAX: 907-349-1015

Project No. ___ JUNE 2010
Date ___ LAP
Designed ___ LAP
Drawn ___
Approved ___

Sheet No. S1.1
SHEET ___ OF ___

G:\ACAD\CHEFORNAK\2010 Lagoon Access Boardwalk Improv\S1.1 FRAMING DETAILS.dwg, 3/25/2011 12:25:39 PM, cmerz, \\Ce2main\LANIER MP C2050/LD520C PCL 6

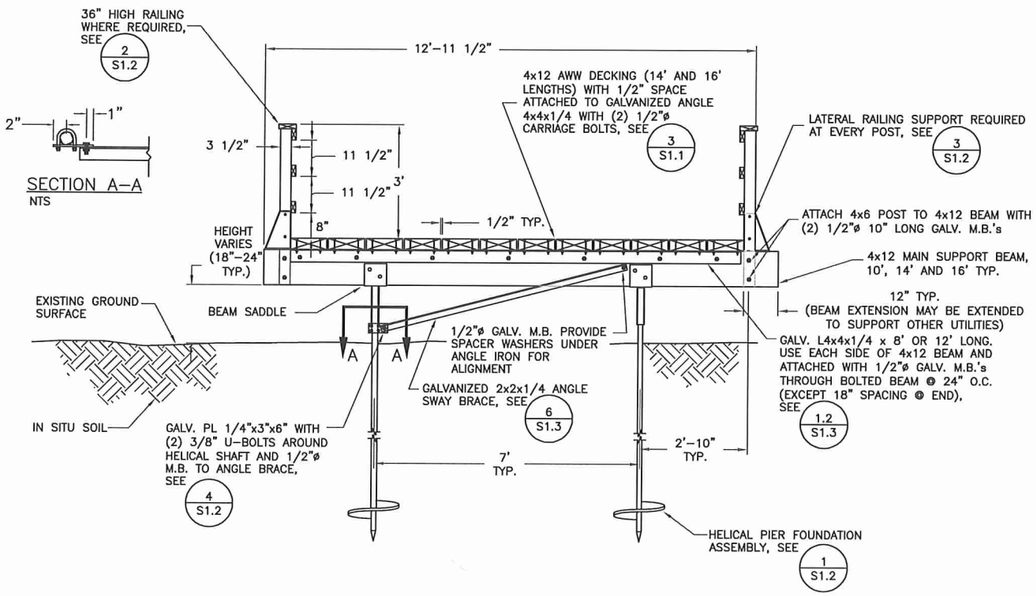

A S1.2 HELICAL PIER SUPPORTED BOARDWALK SECTION

SCALE 1/2" = 1'=0"

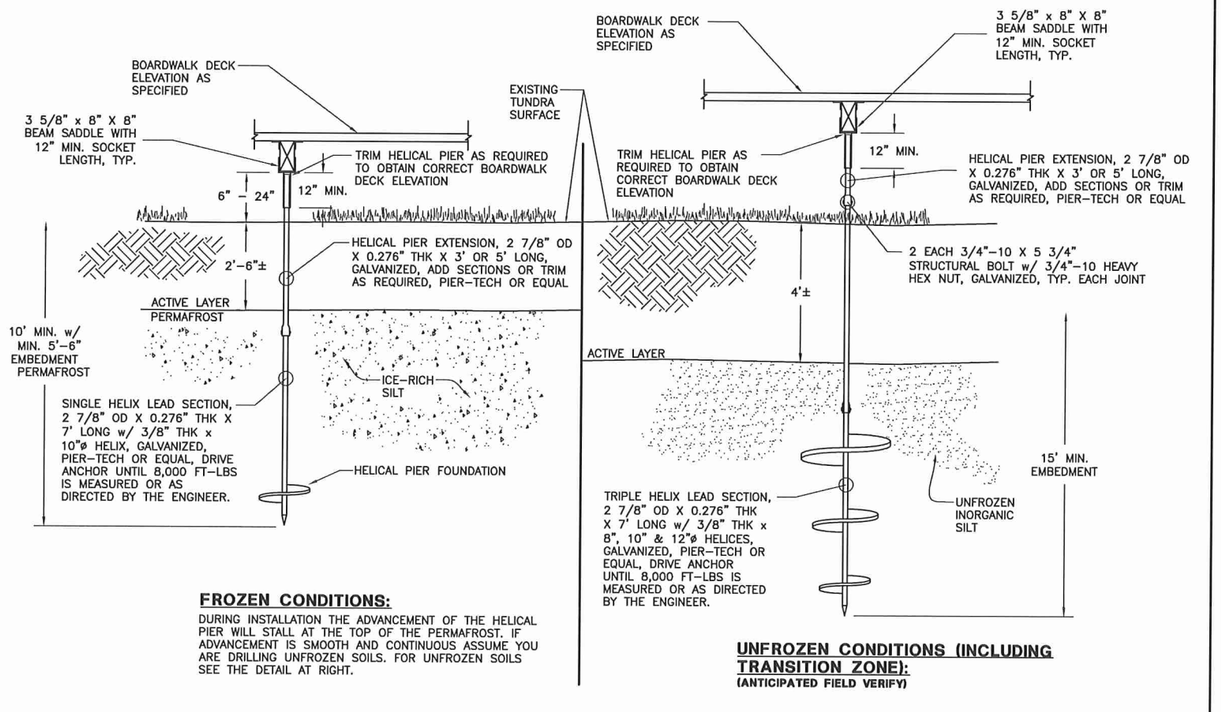

FROZEN CONDITIONS:

DURING INSTALLATION THE ADVANCEMENT OF THE HELICAL PIER WILL STALL AT THE TOP OF THE PERMAFROST. IF ADVANCEMENT IS SMOOTH AND CONTINUOUS ASSUME YOU ARE DRILLING UNFROZEN SOILS. FOR UNFROZEN SOILS SEE THE DETAIL AT RIGHT.

UNFROZEN CONDITIONS (INCLUDING TRANSITION ZONE):
(ANTICIPATED FIELD VERIFY)

1 S1.2 HELICAL PIER FOUNDATION ASSEMBLY

NTS

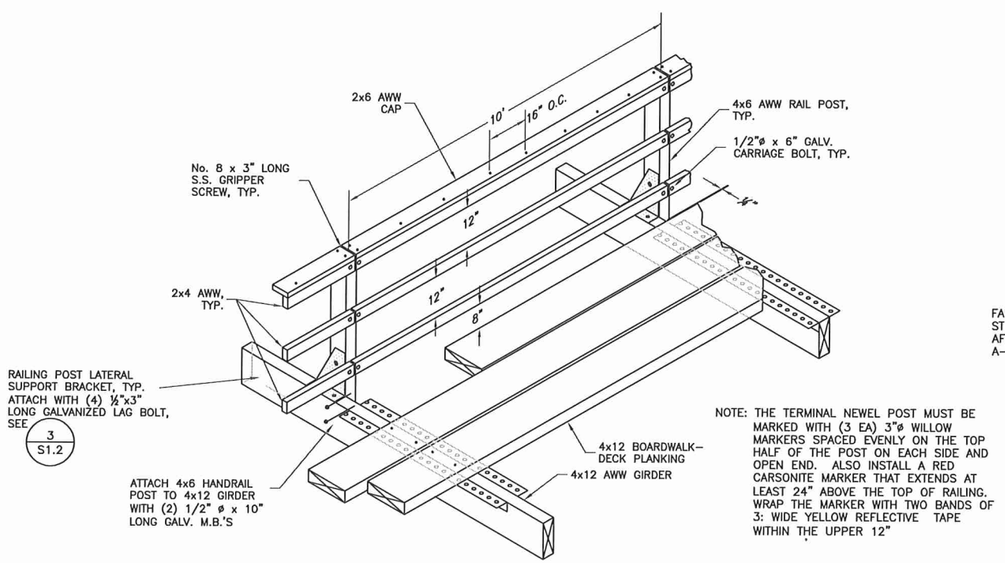

2 S1.2 RAILING DETAIL (IF REQUIRED)

NTS (ONLY REQUIRED WHERE THE AVERAGE BOARDWALK DECK ELEVATION, MEASURED ALONG EACH SIDE, EXCEEDS 24" ABOVE THE EXISTING GROUND SURFACE)

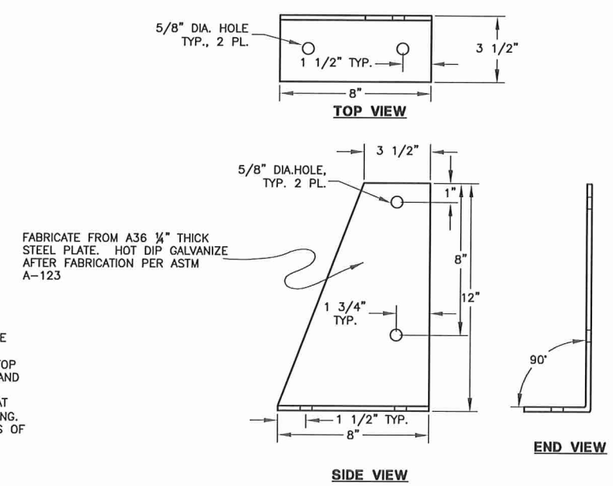

3 S1.2 RAILING POST SUPPORT BRACKET DETAIL

SCALE: 3/8" = 1"

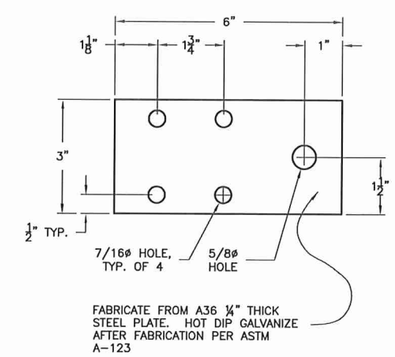

4 S1.2 CONNECTOR PLATE

SCALE: ½" = 1"

RECORD DRAWING CERTIFICATE
THESE DRAWINGS REFLECT RECORDED INFORMATION OBTAINED DURING CONSTRUCTION. INFORMATION PROVIDED HEREIN IS ACCURATE TO THE BEST OF MY KNOWLEDGE.
NAME DATE

SCALE: AS SHOWN
DATE ENG. NOTION ORIGINAL DRAWING
0 1"
IF NOT ONE INCH ON THIS SHEET, ADJUST SCALES ACCORDINGLY

CONSTRUCTION RECORD
FIELD BOOK
STAKING
FOREMAN
AS-BUILT
INSPECTOR

STATE OF ALASKA
49-21
LANCE A. PRESSON
50 AS 8860
REGISTERED PROFESSIONAL ENGINEER

2010 LAGOON ACCESS BOARD ROAD IMPROVEMENTS
DETAILS
CHEFORNAK, ALASKA

CE2 ENGINEERS, INC.
PO BOX 230246 ANCHORAGE, AK 99523 PH: 907-349-1010 FAX: 907-349-1015

REVISION	BY	DATE

Project No. ____
Date JUNE 2010
Designed LAP
Drawn ____
Approved LAP

Sheet No. S1.2
SHEET ____ OF ____

G:\ACAD\CHEFORNAK\2010 Lagoon Access Boardwalk Improv\S1.2 FRAMING DETAILS.dwg, 3/25/2011 12:12:18 PM, cmerz, LANIER MP C2050_LD520C PCL 6.pc3

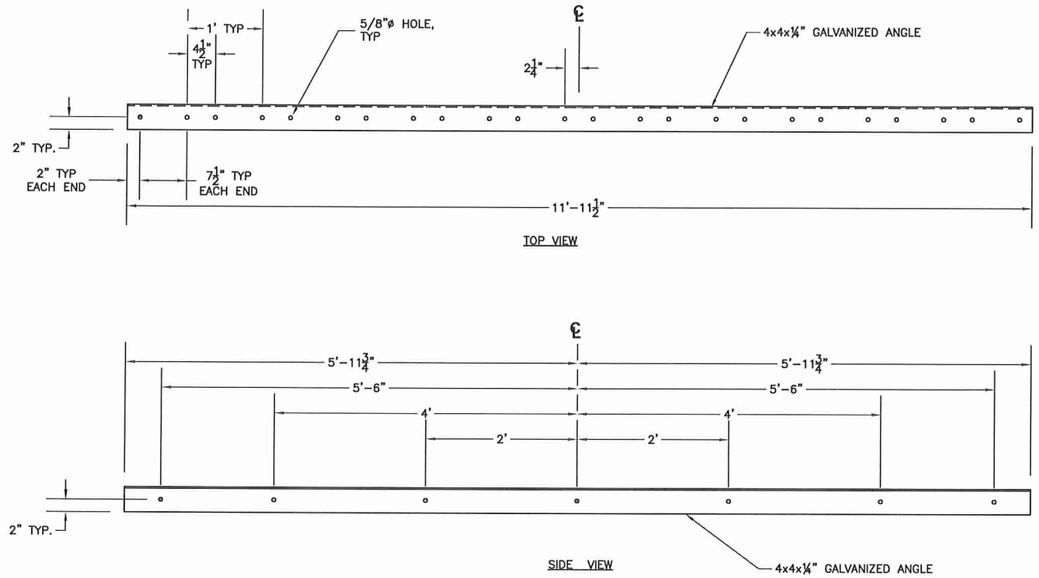

1 S1.3 **12' BEAM ANGLE**
SCALE: 1"=1'

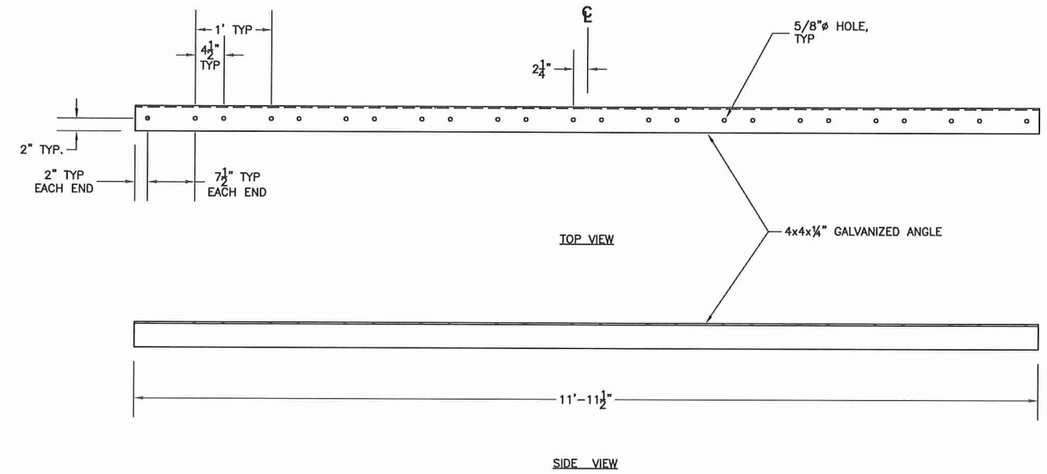

3 S1.3 **12' STIFFENER**
SCALE: 1"=1'

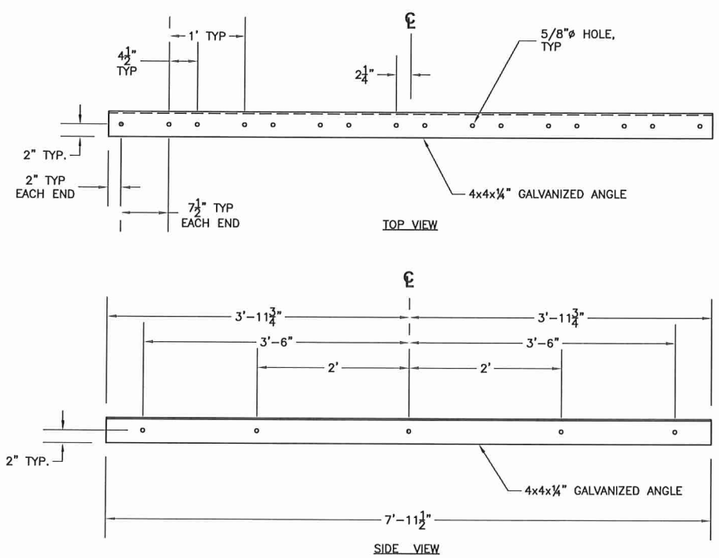

2 S1.3 **8' BEAM ANGLE**
SCALE: 1"=1'

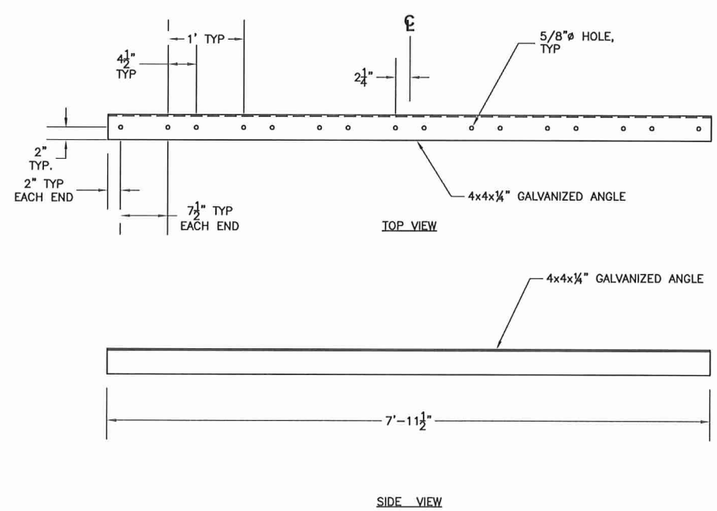

4 S1.3 **8' STIFFENER**
SCALE: 1"=1'

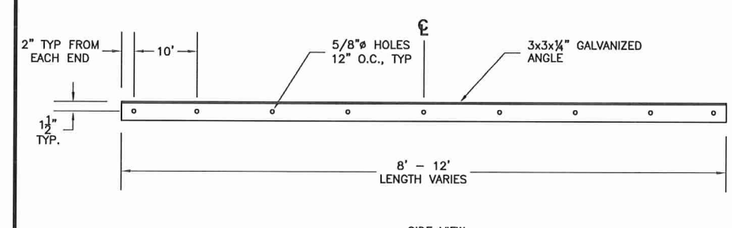

NOTE:
ATTACH TO 4x12 LEDGER BEAM WITH ½"ø M.B.'S @ 12" O.C.

5 S1.3 **8' LEDGER**
SCALE: 1"=1'

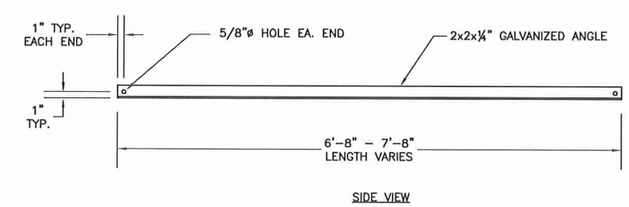

6 S1.3 **SWAYBRACE DETAIL**
SCALE: 1"=1'

RECORD DRAWING CERTIFICATE
THESE DRAWINGS REFLECT RECORDED INFORMATION OBTAINED DURING CONSTRUCTION. INFORMATION PROVIDED HEREIN IS ACCURATE TO THE BEST OF MY KNOWLEDGE.
NAME DATE

SCALE: AS SHOWN
BAR IS ONE INCH ON ORIGINAL DRAWING
IF NOT ONE INCH ON THIS SHEET, ADJUST SCALES ACCORDINGLY

CONSTRUCTION RECORD
FIELD BOOK
STAKING
FOREMAN
AS-BUILT
INSPECTOR

STATE OF ALASKA
49TH
Lloyd A. Peterson
MD CE 9692
REGISTERED PROFESSIONAL ENGINEER

2010 LAGOON ACCESS BOARD ROAD IMPROVEMENTS
DETAILS
CHEFORNAK, ALASKA

CE2 ENGINEERS, INC.
PO BOX 232946 ANCHORAGE, AK 99523 PH: 907-349-1010 FAX: 907-349-1015

REVISION	BY	DATE

Project No.
Date JUNE 2010
Designed LAP
Drawn
Approved LAP

Sheet No. S1.3
SHEET ___ OF ___

G:\ACAD\CHEFORNAK\2010 Lagoon Access Boardwalk Improv\S1.3 FRAMING DETAILS.dwg, 3/25/2011 12:26:13 PM, cmerz, \\Ce2main\LANIER MP C2050/LD520C PCL 6

BOARDWALK GRADE CONSTRAINTS:
PLACE GRAVEL FILL AS REQUIRED TO HOLD THE BOARDWALK GRADE BETWEEN +4% AND −4% (5 INCHES OF RISE OR FALL PER 10 FEET OF RUN). PROVIDE A SMOOTH AND GRADUAL TRANSITION AT ALL CHANGES IN GRADE, IN ACCORDANCE WITH THE FOLLOWING TABLE:

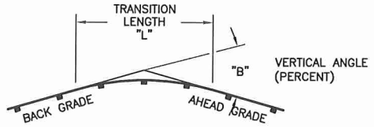

VERTICAL ANGLE AT GRADE CHANGE IN PERCENT "B"	MINIMUM TRANSITION LENGTH IN FEET "L"
1	2.5
2	5
3	7
4	10
5	12
>5	NOT PERMITTED

NOTE:
3/4" x 4-1/2" LONG GALV. LAG BOLT DECK FASTENERS ARE REQUIRED AT ALL TRANSITION SECTIONS.

1 / S1.4 **BOARD ROAD GRADE CONSTRAINTS**
NTS

RECORD DRAWING CERTIFICATE
THESE DRAWINGS REFLECT RECORDED INFORMATION OBTAINED DURING CONSTRUCTION. INFORMATION PROVIDED HEREIN IS ACCURATE TO THE BEST OF MY KNOWLEDGE.
NAME DATE

SCALE: AS SHOWN
BAR IS ONE INCH ON ORIGINAL DRAWING
0 1"
IF NOT ONE INCH ON THIS SHEET, ADJUST SCALES ACCORDINGLY

CONSTRUCTION RECORD
FIELD BOOK
STAKING
FOREMAN
AS-BUILT
INSPECTOR

STATE OF ALASKA
49TH
Lloyd A. Peterson
NO. CE 9607
REGISTERED PROFESSIONAL ENGINEER
3/25/11

2010 LAGOON ACCESS
BOARD ROAD IMPROVEMENTS

DETAILS
CHEFORNAK, ALASKA

CE2 ENGINEERS, INC.
PO BOX 232946 ANCHORAGE, AK 99523 PH: 907-349-1010 FAX: 907-349-1015

REVISION	BY	DATE

Project No.
Date JUNE 2010
Designed LAP
Drawn
Approved LAP

Sheet No. S1.4
SHEET ____ OF ____

G:\ACAD\CHEFORNAK\2010 Lagoon Access Boardwalk Improv\S1.4 FRAMING DETAILS.dwg, 3/25/2011 11:56:49 AM, cmerz, \\Ce2main\LANIER MP C2050/LD520C PCL 6