Division of Environmental Health
and Engineering

E
A

Water and Wastewater Improvements
Project for The City of Chefornak

Environmental Assessment

The Alaska Native Tribal Health Consortium
& Village Safe Water
September 2014

EXECUTIVE SUMMARY

The Alaska Native Tribal Health Consortium (ANTHC) and the State of Alaska Village Safe Water (VSW) propose to upgrade the water and sewer system for the City of Chefornak. ANTHC is the administrative lead and VSW is the construction lead for the proposed project. The Proposed Action includes both water and wastewater improvements:

- Construction of a new 4.5 acre two-cell sewage discharge lagoon with a footprint of 6.5 acres.
- Construction of a new 2,100 linear feet (LF) above ground sewage force main with glycol-heat trace and 300 feet of access boardwalks.
- Construction of a new in town sewage transfer station (i.e., honeybucket dump station).
- Add fencing to the existing honeybucket dumpsite.
- Construction of a new 1,500 square foot washeteria and new lift station.
- Upgrade the 12 existing water dispensing points to an energy efficient design and make energy efficiency improvements to the distribution system.
- Upgrade the well head to be more sanitary, energy efficient, easier to maintain, and bring electrical connections up to code.
- Construction of a new Pumphouse #1.
- Construction of a new Pumphouse #2, interconnection pipeline, and access boardwalks.
- Construction of a new 22,000-gallon treated water storage tank.
- Erection of a fence with high winter visibility around existing honeybucket dumpsite.

This Environmental Assessment (EA) describes and analyzes the potential environmental impacts of the Proposed Action and No Action alternative in accordance with the National Environmental Policy Act (NEPA) for the project. Based on the analyses, it was concluded that development of the Proposed Action would be unlikely to adversely affect historic properties, threatened or endangered species, wildlife resources, soils, or air quality. A minor impact on wetlands and floodplains would result from the construction of the new infrastructure. A beneficial impact would result from the upgraded water and wastewater systems to the human, social and economic conditions, and minority or low-income populations.

Table of Contents

1.0 Purpose of and Need for Proposed Action 1

1.1 Introduction 1

1.2 Background 2

1.3 Purpose and Need 3

1.4 Objectives 6

1.5 Scoping and Resource Issues 6

1.5.1 Scoping 6

1.5.2 Relevant Resource Issues 7

1.5.3 Resource Issues Eliminated from Detailed Study 8

2.0 Proposed Action and Alternatives 9

2.1 Environmental Design Criteria 9

2.2 Description of Alternatives 10

2.2.1 Proposed Action 10

2.2.2 No Action 13

2.2.3 Alternatives Considered but Eliminated from Evaluation 14

2.3 Comparison of Alternatives 15

3.0 Affected Environment and Environmental Consequences 19

3.1 Air Quality 19

3.1.1 Existing Conditions 19

3.1.2 Impacts and Mitigation 19

3.2 Water Resources and Wetlands 20

3.2.1 Surface Waters and Wetlands 20

3.2.2 Floodplains 22

3.2.3 Ground Water 24

3.3 Wildlife Resources 24

3.3.1 Existing Conditions 24

3.3.2 Impacts and Mitigation 25

3.4 Socioeconomic Issues and Environmental Justice 25

3.4.1 Existing Conditions 26

3.4.2 Impacts and Mitigations 28

3.4.3 Subsistence Culture and Living 30

3.5 Land Use 31

3.5.1 Existing Conditions 31

3.5.2 Impacts and Mitigation 31

3.6 Public Health 32

3.6.1 Existing Conditions 32

3.6.2 Impacts and Mitigation 33

3.7 Resource Areas Eliminated from Detailed Study 34

3.7.1 Soil and Geologic Resources 34

3.7.2 Vegetation Resources 35

3.7.3 Recreation Resources 35

3.7.4 Soundscape Resources 35

3.7.5 Visual Resources 35

3.7.6 Historic Properties 35

3.8 Cumulative Impacts 36

3.9 Unavoidable Adverse Impacts 38

3.10 Irreversible and irretrievable Impacts 38

3.11 Mitigation..... 39

4.0 Consultation and Coordination.....41

5.0 List of Preparers.....42

6.0 References 43

List of Tables

Table 1 Major Components of the Proposed Action and Funding Sources 12

Table 2 Evaluation of Alternatives by Design Criteria 16

Table 3 Evaluation of Alternatives by Resource Areas Impacted 17

Table 4 City of Chefornak Population 1970-2010 26

Table 5 Key 2010 Housing Data 26

Table 6 Chefornak Cost of Living 2011 27

Table 7 Existing Monthly Sewer User Fee Structure 2012 28

Table 8 Estimated Annual Operation and Maintenance Costs 29

Table 9 Past Present and Reasonably Foreseeable Future Actions 37

List of Figures

Figure 1 Site and Vicinity Map
Figure 2 Components of the Proposed Action

Appendices

Appendix A Consultation and Coordination Letters
Appendix B Eight Step Process for Floodplain Development
Appendix C Construction Costs
Appendix D Projects, Permits and Authorizations
Appendix E Site Plans
Appendix F Environmental Review Checklist

Acronyms and Abbreviations

AEA	Alaska Energy Authority
ADEC	Alaska Department of Environmental Conservation
ANTHC	Alaska Native Tribal Health Consortium
ATV	All-terrain Vehicle
BMP	Best Management Practices
CE2	CE2 Engineers Incorporated
CEQ	Council of Environmental Quality
CFR	Code of Federal Regulations
DEED	Department of Early Education and Development
DCCED	Department of Commerce, Community and Economic Development
DOT/PF	Department of Transportation and Public Facilities
EA	Environmental Assessment
EPA	United States Environmental Protection Agency
FAA	Federal Aviation Administration
FONSI	Findings of No Significant Impacts
FT&H	Flush Tank and Haul System
HUD	Housing and Urban Development
IHBG	Indian Housing Block Grant
IHS	Indian Health Services
LF	Linear Feet
MRSA	Methicillin-resistant Staphylococcus Aureus
NAHASDA	Native American Housing Assistance and Self Determination Act
NEPA	National Environmental Policy Act
PHS	Public Health Service
RPSU	Rural Power System Upgrade
SHPO	State Historic Preservation Officer
SWPPP	Storm Water Pollution Prevention Plan
TDS	Total Dissolved Solids
USACE	United States Army Corps of Engineers
USFWS	United States Fish and Wildlife Service
VSW	Village Safe Water
WTP	Water Treatment Plant

1.0 Purpose of and Need for Proposed Action

The City of Chefornak proposes to upgrade their existing water and wastewater facilities within the community. The Proposed Action will involve federal funds and therefore requires review under the National Environmental Policy Act (NEPA). This Environmental Assessment (EA) has been prepared to determine whether the project would result in significant impacts to the environment.

This section describes the proponent's purpose and need for the proposed project. Also discussed in this section is the project scoping activities and a brief history of previous actions related to water and wastewater projects in the City of Chefornak.

1.1 Introduction

The City of Chefornak is a Yup'ik Eskimo community located on the south bank of the Kinia River and the Keguk River junction. It lies in the Yukon-Kuskokwim Delta, 98 miles southwest of Bethel, Alaska and 490 miles west of Anchorage, Alaska. Chefornak lies approximately five miles east of the Bering Sea. The village lies within the Clarence Rhode National Wildlife Refuge, established for migratory waterfowl protection. The population of Chefornak appears to be growing, with a current population of 436, compared to 394 in 2000 and 320 in 1990 (Department of Commerce Community and Economic Development [DCCED], 2013; U.S. Census, 2010).

The community moved to its present location in the 1950's and due to the population size, became incorporated as a second-class city in 1974. It is not located in an organized borough. Both the City of Chefornak (a federally-recognized tribe, often referred to as the Chefornak Traditional Council), and its village corporation, Chefarnrmute Inc., are located in Chefornak.

The community is located in a marine climate near the Bering Sea. Precipitation averages 22 inches with 43 inches of snowfall annually. Summer temperatures range from 41 to 57°F and winter temperatures range from 6 to 24°F. Blocky, igneous rocks are present in the village and the surrounding tundra. The average elevations within the community and in the surrounding area range from 76 feet to more than 112 feet above mean sea level (DCCED, 2013).

The City of Chefornak operates a water treatment plant that provides water to the School, community clinic, a temporary washeteria, and 12 watering points. Wastewater facilities are also operated by the City and include: honeybucket dumpsite, and an untreated effluent tundra lagoon which receives water from the clinic, and temporary washeteria.

This EA evaluates the potential impacts of the proposed alternatives, including No Action, on the physical, biological, and human resources of the Chefornak community. If significant impacts are identified in the EA, a more detailed Environmental Impact Statement (EIS) would be prepared. If the Indian Health Services (IHS) determines that no significant adverse impacts would occur, it would issue a Finding of No Significant Impact (FONSI). This finding would allow Village Safe Water (VSW) and the City of Chefornak to proceed with the proposed project.

1.2 Background

In 1993, VSW began a water and sewer study for Chefornak. During 1994 and 1995, VSW managed a water source study along with HDR, Hefty Drilling, and Terrasat, and drilled eleven wells. The well field provided meager production but was deemed sufficient to supply a flush tank and haul system (FT&H). An FT&H system makes use of small vehicles such as all-terrain vehicles (ATVs) to haul collected wastewater stored in small holding tanks to a wastewater lagoon.

In 1997, the City of Chefornak contracted with CE2 Engineers Inc. (CE2), a private consulting firm, to design the FT&H system, upgrades to the existing watering points, waste heat recovery from the electrical generator system, well field collection and raw water main to the old water plant, new water plant, and boardwalk improvements.

Construction took place in 1998 and 1999. Twelve houses were fitted for a FT&H. The raw water main and well field boardwalk were built, and water was supplied to the old water plant. The foundation to a new water plant was laid. The design of the new boardwalk was raised so that water mains could be constructed underneath. Project expenditures during 1998 and 1999 were $1,869,000. Project expenditures up to 1999 totaled $2,379,000.

Problems with the new system began in 2000. First, it turned out that families served with water haul could not afford it. The existing 4-feet wide boardwalk was undersized for anything but a 100-gallon water haul vehicle, which drove up haul system labor costs. The costs to supply water to families with 5 to 10 persons exceeded their ability to pay.

Second, the Total Dissolved Solids (TDS, or salinity) in the new well field rose above the primary drinking water standard set by the Environmental Protection Agency (EPA). Water treatment alternatives were evaluated and discarded as too expensive. Construction work was limited to construction of boardwalks in 2000. In 2001, the boardwalk project was completed. The community abandoned the FT&H concept, and elected to go with a piped water and sewer system. Three potential well drilling sites were identified.

Additional wells were drilled in 2002 to a depth of about 250 feet, two of which were identified as having sufficient quality and quantity to serve a piped water system. The contract with the consultant was amended to assess feasibility of community piped water and sewer. Funds expended in 2002 were $183,000 (project expenditures up to 2003 totaled $5,627,000). The new wells went saline in 2003 when piping was continuous and a hydrogeological consultant (Golder Associates Inc., 2003) was hired to conduct hydrophysical investigations into the sub-permafrost fresh-salt water interface. No prospect for significant fresh water was found.

The feasibility of obtaining river water during low tide was assessed and was also found to be saline and did not meet primary EPA drinking water standards. To meet standards, a reverse osmosis system would need to be employed, and neither construction nor operating funds were available for such a system. In 2004, extensive water treatment testing began and found the 2002 well water to be treatable, but the process was volatile and complicated. Low rate, which is defined as 3-5 gallons per minute, pumping tests found that lower TDS concentrations could be had by "sipping the water" out of the wells. Further water testing was performed using additional methods that appeared promising, but results were mixed. Reverse osmosis was a possibility for drinking water, but it still required color removal and is an energy intensive and costly process.

Beginning in 2005, VSW engineers decided to look at the water chemistry in detail to see if there were any other methods to deal with the TDS in the water supply. VSW changed project engineers and the newly assigned engineer directed CE2 to examine the river and tundra lakes nearby as a water source.

The lakes close enough to supply water without long pipelines were found to be shallow (only 2.5 feet deep). The river was too saline, even during low tide. Lakes that were deep enough to adequately supply water to Chefornak would have required long pipelines and could only be used seasonally. This would require large water tanks, which are a problem to build in Chefornak due to soil conditions, and winter heating would be costly.

Without finding a cost effective and maintainable water treatment process; and with several turnovers in project administration, little was accomplished from 2006 through 2009. In 2009, with the appointment of a new VSW project engineer and extensive community input, the project regained focus. The community passed a formal resolution stating its position on the level of service acceptable, grant monies were obtained, and a specific plan of action, as enumerated in the Proposed Action, is underway. Currently the City of Chefornak's water and sewer infrastructure is composed of a temporary washeteria, 12 watering points, a honeybucket dump, and an existing pumphouse with an attached water treatment plant (Randlett, 2014).

In addition to the watering points, the City currently supplies the Chaputnguak School and the washeteria with water from the Water Treatment Facility. The washeteria receives "utility water" for washing machines and showers from this facility. However, the School has an ultrafiltration/reverse osmosis water treatment system that removes organic color and salt from water that is provided by the City Water Treatment Facility. During water treatment, this process uses 7-10 gallons per minute of water, through an existing service line off the water distribution loop. Discussions were held with the School about the possibility of providing treated water from their system. The School rejected the idea because they were not in the business of being a municipal water treatment facility.

1.3 Purpose and Need

The purpose of the proposed project is to improve the existing water and wastewater systems within the City of Chefornak. Currently the City of Chefornak's infrastructure consists of both aging water and wastewater components that do not meet water quality permit standards (18 AAC 70) which increases the potential for the spread of waterborne illness.

This project is needed in order to achieve the health benefit of a plentiful, convenient supply of water for daily needs, which has been a challenge for Chefornak since its founding. The existing system includes a water treatment facility with 12 watering points serving the community, and a temporary washeteria, both of which are more than 30 years old and have exceeded their design life. The community lacks any permitted sewage treatment and disposal system. Currently Chefornak has no water distribution system for supplying potable water to residences, and no adequate provisions for sewage disposal. The absence of a comprehensive drinking water and wastewater systems constitutes a potential health hazard to the residents of the City of Chefornak. Exploration for water to serve a piped system found that there was not enough good, quality water to effectively deliver 50-65 gallons to residents required for a piped system (Randlett, 2014). Instead, the residents have community facilities, and seek efficient use of water gathered from several other sources.

Water for drinking, cooking, personal hygiene, kitchen sanitation, home cleaning, home laundry, and steam bathing come from one or more of the following sources: treated water gathered from an existing water

dispensing point, rain collected off of the roof in a rain barrel, chipped ice collected from specific ponds, spring water gathered by boat, and bottled water purchased at the Chefarnrmute Inc. store.

The existing well and water treatment plant that were constructed by the Public Health Service (PHS) has been supplying water to the community through the water plant for over 40 years, are in disrepair, and do not meet existing code requirements. The City water meets the health standards for drinking water, but the salt content is more than the taste and color standards EPA has established for esthetics. Treatment at the PHS-constructed water treatment plant originally consisted of coagulant addition to the well water and multimedia filtration, followed by chlorination before being stored in a 4,000-gallon steel water storage tank, which is used as a buffer tank for the water distribution system. Presently, filtration is performed, but not with coagulants, and only a hypochlorite solution is added to the water before it enters the 4,000-gallon tank. Because of the TDS, water is often not consumed by residents who use the supplied water for "utility water" (such as: water for laundry, washing, steam baths, and other non-potable uses [CE2, 2013a]). The public has been satisfied with this system and wants it to continue. However, an additional supply of water would help with salt-water intrusion and increase reliability of service. Furthermore, the current saline well water may gradually degrade under the School's increased load and there would be no alternative source of drinking water for the School to operate.

Two wells were drilled on the south end of the community in 2002, to a depth of about 250 feet before being abandoned as a replacement water source. These two wells, along with the original PHS well, are shown in Figure 2. Extensive testing found that the wells experienced higher saline concentrations above three gallons per minute and are therefore not suitable for drinking water (CE2, 2013a). However, in limited use these two wells could serve as an alternate water source to the PHS well. Working together, the two water sources could limit TDS increases in all wells, potentially making water from the distribution points a more desirable drinking water source.

The existing watering points are approaching 30 years old, and are showing their age. In an inspection in March 2012 by CE2 (CE2, 2012), it was reported the enclosures had evidence of heat leaks, and the piping components of the watering point branch off of the three inch high-density polyethylene loop showed signs of corrosion and age. The enclosures used a considerable amount of electrical energy for heating because they are drafty due to aging of the structure, settlement, and deterioration of the insulation, which makes them uneconomical to operate. The structures are approaching the end of their useful life. The watering points are currently subject to increased failure due to age.

For decades, the washing of clothes has been performed at home, either using hand washing methods or home washing machines of varying capabilities. Water was purchased from existing watering points and used in the washing machines. Water in these machines was used at least several times for multiple loads of clothes. When the water was not suitable for use, it was discarded outside the home on the tundra. Washing clothes by this method has a number of shortcomings:

- Clothes are not cleaned as well (when compared with what commercial-type washers can achieve) without the use of fresh water during rinse cycles;
- Clothes are not disinfected very effectively with extensive water reuse;
- Commercial units can provide separate rinses and disinfection with the use of ozone systems;
- Wastewater disposal is not sanitary with surface disposal next to the house where laundry is being washed; and

- It is more expensive to wash clothes at home. In a comparative study of a similar sized community (Tuluksak, Alaska) the cost per pound of laundry at home was calculated at $0.74 vs. the washeteria at $0.28 (CRW Engineering Group LLC, 2014).

The present provisional washeteria constructed in 2010 was envisioned as a stop-gap measure to provide limited laundry cleaning facilities and showers until the new washeteria could be constructed. It was built in the shell of the old power plant building, with boilers and circulating pumps installed in the existing heat recovery building, adjacent to the power plant building. The provisional washeteria contains three washing machines, two dryers, two shower stalls, lavatory and laundry sinks, two boilers and an indirect hot water heater. Wastewater flows by gravity into a small lift station, where the wastewater is pumped via a 100-foot long force main into the existing School force main to the tundra pond used presently as a wastewater lagoon (CE2, 2013b).

Within the Water Treatment Facility, a sweating (condensing of water) indoor water tank has rotted the floor framing system, causing the floor to sag nearly a foot. The mechanical and electrical systems are dilapidated, and the boiler has been decommissioned. The existing 4,000-gallon water storage tank leaks and does not provide sufficient capacity for year-round service to the community.

All honeybucket waste is currently hauled to a dedicated honeybucket dumpsite adjacent to the community. In a July 2007 inspection by Alaska Department of Environmental Conservation (ADEC), the severity of the wastewater infrastructure was identified. The regulatory violations noted can only be resolved with the infrastructure corrections. The existing dumpsite is near capacity. The continued use of the City's tundra pond for wastewater discharge and the honeybucket lagoon for raw sewage was considered; however, ADEC will not issue a permit for discharge to the pond, and has cited the honeybucket lagoon for compliance issues.

The health risk of a bucket toilet has changed over the years. To pass an illness through use of either a honeybucket, an outhouse, a water-flush toilet, or a compost toilet, the user must have a transmissible illness, and feces / bodily fluids must be transferred in some physical manner to another person. The use of a honeybucket remains standard in most Chefornak homes. Many of the illnesses that were once spread in the Yukon-Kuskokwim area have been reduced through vaccinations. Hand washing is still the best way to interrupt the spread of sewage-borne illness.

The sewage disposal in Chefornak is uncontrolled. The tundra pond receives sewage from the temporary washeteria and the School overflow and is not protected from flooding. The plastic bags dumped at the bucket dump-site prevent the natural decomposition of sewage and are likewise uncontrolled. A boundary fence is needed to contain the existing honeybucket dumpsite and provide added safety by controlling the spread of existing wastes, while also providing visibility during the winter.

Limited, existing sanitation services are currently located within Chefornak. Outhouses, originally attempted in the 1960's, are no longer present. The public School treats sewage with a membrane bioreactor system, and the treated wastewater effluent is discharged to the School Tundra Pond Lagoon which is an unlined pond in direct contact with the tundra. An agreement between the City and the School District stipulates that both would use a common lagoon once it has been constructed.

Nearly all residents currently rely on buckets lined with a plastic bag at home, and work. Five homes located in Chefornak use a 100-gallon water and 100-gallon sewage tank. Four homes and one office building have composting toilets. Approximately 20 homes direct discharge untreated household sewage

directly into the Kinia River. The residents self-haul untreated sewage to the bucket dumping area for disposal. This dump-site has been ineffective in containing bagged sewage. Additionally, in the winter months, snow cover makes it hard for residents to locate the proper disposal area.

1.4 Objectives

The IHS and the Alaska Native Tribal Health Consortium (ANTHC), have as their respective mission(s), to involve and assist Alaska Natives to improve their health and safety through the provision of sanitation facilities. Legal authority comes from Public Laws 86-121 and 93-638.

The IHS and ANTHC missions and applicable laws are the sources of the following specific project objectives, as applicable to the needs identified at Chefornak:

- To improve the overall health conditions of the local residents;
- To provide a reliable, safe, and convenient source of treated water;
- To accommodate the needs of current and projected residents, in a manner that encourages greater water use for targeted healthy practices;
- To provide a sanitary method of collecting and treating human waste in a manner acceptable to the local residents; and
- To be aware of, and to avoid the undesirable impacts on the surrounding physical and biological environments.

These objectives are shared in common with the VSW; its goal is work with rural communities to develop sustainable sanitation facilities.

1.5 Scoping and Resource Issues

Scoping, the first step in the NEPA process, is designed to meet two objectives. The first is to identify alternatives to the Proposed Action and/or alternative ways to implement the Proposed Action so that the identified purposes and needs are fulfilled. The second is to identify environmental concerns or issues relevant to the Proposed Action and its alternatives that should be addressed in the EA.

1.5.1 Scoping

Scoping for this project was conducted during each stage of the permitting process and, to a large extent, during the last 20 years of extensive planning process for the project. Correspondence associated with agency scoping is included as Appendix A.

In 2009, in a meeting attended by approximately 75 residents, along with the VSW project engineer and engineering consultant, the City Council decided to stop seeking grants to find a water source to deliver water directly to homes. Instead, the Council resolved to seek improved community infrastructure, including an engineered lagoon, a force main and water treatment plant, improvements at the water source, a washeteria, and upgrades to the dump station. Several public meetings followed to discuss matters as they developed.

The Chefornak City Council chose to request the grants described in this EA, which are all community services, because a plentiful source of high quality water was not available, and the poor quality of water would require a particularly expensive, energy intensive form of water treatment. Residents expected the

installation of piped water based on years of planning and water exploration. After years of unsuccessful attempts to find an affordable high quality water source, the Council passed a resolution accepting robust community services in lieu of a piped water system (City of Chefornak, 2009). The residents remain concerned about the health issues of limited water. While some residents have learned effective sanitation through food safety or health care training, others are gradually learning about the habits under their own control that can prevent the transmission of disease.

Community Scoping

The Village Corporation, Chefarnrmute Inc., residents of the City of Chefornak, and the Chefornak Traditional Council jointly selected the proposed wastewater lagoon site. Chefarnrmute Inc. recently issued a non-objection to its lagoon location (Randlett, 2014). Of concern was the impact of water being released from the lagoon onto adjoining land. It was determined that the natural topography and proposed operator practices would channel the effluent away from the Corporation-owned adjacent parcel.

During community meetings, residents raised questions and concerns. The potential impact of "Pine-Sol" on the receiving environment was raised by a resident, as Pine-Sol is used for odor control in honeybuckets (an estimated 40 cups of Pine-Sol are discarded daily from resident use). Additionally, one resident expressed concern over pollution from aircraft flying to the airport. Another resident had concerns related to snow machine trails, that would be blocked by the proposed new force main. During public comment, one resident requested that the exterior color of the washeteria be selected to be visible both at night, and during a white out.

Agency Scoping

Early agency coordination efforts were made to ensure timely communication of project impacts and to streamline the agency approval process. In 2011 and 2013, the project received concurrences regarding protected species and critical habitat from U.S. Fish and Wildlife Service (USFWS) during U.S. Army Corps of Engineers (USACE) permit review. Reviews by the Alaska Department of Natural Resources State Historic Preservation Office (SHPO) also occurred in 2011. Although concurrence from agencies along with the USACE permit was received by 2012, changes in the design, particularly redesign of the sewage lagoon prompted new agency scoping in 2013 and modification to the USACE permit. Subsequent coordination following redesign with the Federal Aviation Administration (FAA) was completed in early 2014. Concerns during agency scoping involved impacts to threatened and endangered species and to adjacent land owners from installation of the sewage lagoon. Upon initiation of the EA process and determination of impacted floodplains, a public notice was issued on July 15, 2014, and posted in the community post office notifying the public of the project elements and their potential impact to floodplains (Appendix B). No comments were received from the public notice period.

1.5.2 Relevant Resource Issues

Based on early scoping activities with resource agencies, the Chefornak Council and the residents of Chefornak, the following were identified as major resource areas relevant to the project. Additional detail is provided in Sections 3.1 through 3.6 regarding these resource areas.

- Air Quality
- Water Resources and Wetlands
- Wildlife Resources including threatened and endangered species and invasive species

- Socioeconomic Issues and Environmental Justice
- Land Use
- Public Health

1.5.3 Resource Issues Eliminated from Detailed Study

The following resources were found to be of minor to negligible impact, and are discussed further in Section 3.7:

- Soil and Geologic Resources
- Vegetation Resources
- Recreation Resources
- Soundscape Resources
- Visual Resources
- Historic Properties

2.0 Proposed Action and Alternatives

This section describes the reasonable range of alternatives that meet both the purpose and need, and the design criteria for the project.

2.1 Environmental Design Criteria

The following environmental design criteria were used to develop the Proposed Action and to evaluate the reasonable range of alternatives which meet the purpose and need for the project:

- Drinking Water: Must continue providing water at watering points and washeteria, and serve the School and the clinic.
- Sewer: Must provide piped sewer service from the washeteria to the sewer main and eventual disposal in a community sewage lagoon. Provide for disposal in compliance with water quality permit standards (18 AAC 70).
- Solid Waste: The proposed project would not constitute an increase to capacity or capita served by the solid waste facility. All solid waste must be disposed of at the existing landfill and must not generate more solid waste than the existing facility can handle.
- Energy: The proposed project would not exceed the community's energy generating capacity.
- Economic: The project must be fundable by funding agencies and have reasonable and feasible construction cost. The project should have affordable user fees as well as achievable operations and maintenance costs. The washeteria should be close to the new power plant for utilizing waste heat recovery from engine jacket rejected heat;
- Floodplains: To the extent practicable, all facilities would be built outside of the 100-year floodplain. In areas where avoidance is not possible, the structures would be designed to withstand the 100-year flood event.
- Community Resources: The project should require no authority outside of the utility, and require no additional participation from within the community.
- Accessibility: Major components of the proposed project must be within easy access of the public.

The following are definitions and requirements for facilities constructed within floodplains.

- Critical Action: A critical action for which even a slight chance of flooding is too great. The minimum floodplain of concern for critical actions is the 500-year floodplain (i.e., critical action floodplain). Critical actions include, but are not limited to, those which create or extend the useful life of structures or facilities: (a) Such as those which produce, use or store highly volatile, flammable, explosive, toxic or water-reactive materials; (b) Such as hospitals and nursing homes, and housing for the elderly, which are likely to contain occupants who may not be sufficiently mobile to avoid the loss of life or injury during flood and storm events; (c) Such as emergency operation centers, or data storage centers which contain records or services that may become lost inoperative during flood and storm events; and (d) Such as generating plants, and other principal points of utility lines. The first floor of any structure shall be above the 500-year flood elevation. There are no identified critical facilities associated with this project.

- Non-Critical Action or Facility: Properties in non-participating communities (unmapped by Federal Emergency Management Agency) where flood insurance is not available would be reviewed on a case-by-case basis. The first floor of any structure shall be above the 100-year flood elevation. The first floor of the washeteria and Water Treatment Plant is at an elevation of 78 feet and base elevation of the floodplain at 76.8 feet.
- Base Elevation of the Floodplain: The base elevation of the floodplain is estimated to be 76.8. The base floodplain elevation was identified using the best available data provided by engineering studies completed by CE2 and the USACE (See Section 3.2.2).

2.2 Description of Alternatives

The following alternatives were developed during the planning process of the Selected Water and Wastewater Alternatives Plan for Chefornak.

2.2.1 Proposed Action

The Proposed Action alternative was developed based on the Selected Water and Wastewater Alternatives Report with input from the VSW project engineer (CE2, 2013a). A primary consideration in the analysis of the Proposed Action was that the alternative remains a viable option over a twenty year period of use, and meets the above design criteria as well as the project's purpose and need.

Water System Components:

- Water supply: Upgrade the wellhead and bring electrical connections to code.
- Water storage: Erect a bolted steel water tank of 22,000 gallon capacity.
- Water distribution: Replace Pumphouse #1 located near the existing City well; construct a new pumphouse (named Pumphouse #2) near the two wells drilled in 2002; bring both wells associated with Pumphouse #2 into service; include required electrical connections to meet current code.
- Water dispensing: Upgrade the existing 12 water dispensing points to an energy efficient design, and make energy efficiency improvements in the distribution system, including junction boxes; construct a new 1,500 square foot washeteria.

Each new pumphouse would have 4,000 gallons of interior water storage (for a total of 8,000 gallons). In addition, a new bolted steel 22,000-gallon water storage tank would be erected immediately adjacent to a new laundry, toilet and shower facility with a footprint of approximately 1,400 square feet. Final budget constraints would determine the design, but an office for the operators and utility clerk, an American Disabilities Act compliant toilet and shower room, a smaller toilet and shower room, and five washers and six dryers are currently planned. The building would use waste heat from the adjacent power plant for heating purposes. In the winter, the boilers would heat the glycol for the force main and warm the water circulating in the 8,000 linear feet (LF) above ground water distribution loop.

The facilities connected to piped water would continue to be the School, clinic, and washeteria. The School and clinic already have service lines off the distribution loop.

The new Pumphouse #2 would be connected to the aboveground distribution loop with a 300-foot piped connection and a 300 LF maintenance access boardwalk. The Pumphouse #1 connection to the existing well would not change.

Wastewater system components consist of:

- Wastewater collection: Install a sewage transfer station (named honeybucket receiving station) to accept bucketed waste and pumped waste; Install a new lift station to serve the new washeteria and the sewage transfer station; Install a glycol heat-traced 2,100 LF above ground extension of the School's force main with a new 300-foot boardwalk and service line to provide for maintenance access.
- Wastewater treatment and disposal: Construct a 4.2 acre sewage lagoon (footprint 6.5 acres) northeast of town sufficient to treat all community sewage; erect a fence around the existing dumpsite; and repair and elevate the adjacent boardwalk.

To maintain access to the existing winter trail system, the force main extension would include a trail crossing point. Detail on this crossing point is included in Appendix E.

After analytical testing, the contents of the treated wastewater at the lagoon would be discharged from the sewage lagoon in the spring, and fall under a general permit (AKB-573000 [Appendix D]) issued from the ADEC to an area approximately 500 feet by 500 feet. The discharge depth would vary from zero to one inch above the ground surface. This land is owned by the City and has been designated to receive the treated effluent.

Access to the lagoon would be restricted to the sewage plant operator. The sewage would be pumped through the force main with no need or provision for public access. Gray water from the washeteria may be used for washing and dilution at the Sewage Transfer Station. The existing package "E1" lift station that currently serves the temporary washeteria may be abandoned.

Phasing Construction Schedule

The order of construction would be determined as the final cost estimates are defined, and in recognition of funding expiration dates. These actions are the basis for the impact analyses in this EA.

Implementation of the Proposed Action would need to be timed in accordance with funding expiration. The upgrades to the boardwalk and a fence around the bucket dumping area can begin in 2014, pending on environmental approvals.

The pads for the washeteria, tank, and the two pump houses can be built after the August barge arrives in 2014, with construction of the structures to follow.

Excavation of the lagoon soil can start in April 2015 while the ground remains frozen. After summer drainage of the silt, the berms and force main would be constructed in winter 2015-16, and the sewage transfer station in 2016. Grant AN 10-NQ7 will expire in December 2016.

Project Costs and Funding

Tables 1 below summarizes funding sources of the Proposed Action. Construction costs are provided in Appendix C.

Table 1 Major Components of the Proposed Action and Funding Sources

PDS Project Grant	VSW ID #	Clean Water Act	SDWA	IHS Regular	ANIPA Descriptions	Future CPA Amendment Request if Any
Lagoon, Force Main, and Dump Station						
AN10NQ7	11AM80 / 49102	$1,711,924			Constructing a lift station for in-town honeybucket disposal, 1,850 linear LF force main and wastewater treatment lagoon.	No change.
AN13NY7	13AO42 / 72100	$870,000			Complete the design and construction of a three-cell sewage lagoon, lift station and above ground force main that was initiated under project 11AM80; AN-NQ7.	Change text from “three-cell” to a two-cell lagoon.
2015 Request	TBD	TBD			Same scope.	
Force Main, Boardwalk, and Dump Site Fencing						
AN10NQ2	11AM89 / 49049	$331,800			Construct a 1,010 LF of sewer force main to connect the water treatment plant to the community sewer force main. Improvements to the honeybucket dump site, including fencing, and access boardwalk upgrades would also be included.	1) If the force main is not necessary, delete from grant. [If a sand filter is needed for Pumphouse #1, then the force main would carry the backwash water.]
Water Treatment and Distribution						
AN10NQ2	11AM88 / 71991			$1,528,399	Construction of a water treatment plant including foundation piles, water intake source, an upgrade and connection to the water distribution loop, and a 20,000-gallon water storage tank.	1) Change from "water intake source" to "well head improvements." 2) Change pile foundation to gravel foundation. 3) Reduce size of interior water storage tank.
Washeteria and Water Storage Tank						
AN11NR9	11AN50 / 49411	$675,000			Funding for construction of the wastewater portion of a new community washeteria.	No change.
AN11NR9	11AN51 / 49411			$1,485,000	Design and construction of a new washeteria, replacement of 12 watering points and associated distribution main, and minor distribution system upgrades.	No change.
	11AN49 / 49413		$1,603,292		Design and construct a raw-water 500,000-gallon bolted steel water storage tank.	On completion of construction cost estimates, request a scope change from 500,000 gallons to 20,000, and to add scope from AN10NQ2 or AN11NR9. Change scope from 500,000-gallon WST to washeteria.
AN14N1B	15AO76 / TBD		$1,223,626		1) Construct a pumphouse on a gravel foundation and include treatment equipment, approximately 300 LF of access boardwalk to the pumphouse and two above-ground pipe connections between two existing wells (approximately 400 LF) and the pumphouse, and 2) the pumphouse and distribution loop, (approximately 300 LF). This project would reduce the burden on an existing saline well and ensure there is an adequate, non-saline water supply for the new washeteria.	1) Replace "non-saline" with "low salinity," and 2) Delete treatment equipment if there is no chlorination at pumphouse in the final design.
Total		**$3,588,724**	**$2,826,918**	**$3,013,399**		

Material Source Plan

Supplemental gravel for the washeteria, water tank, and pump houses would be purchased and barged to Chefornak. The material for the lagoon berms would be formed from silt material that was excavated in the winter and drained for an intervening summer season.

Proposed Environmental Commitments

- All facilities would be built to withstand a 100-year flood event.
    - This will be achieved by insuring the first floor of any structure is at least three feet above base flood elevation. Specific elevations for project components can be found in Appendix E.
- Each Cooperative Project Agreement with the Village of Chefornak states that construction would halt and the Traditional Council would be consulted if any cultural assets or human remains are discovered.
- After the lagoon is operational, and before any treated wastewater is discharged, samples would be collected for laboratory analysis before discharge; as described in the Wastewater Discharge General Permit.
- The lagoon construction would be performed in winter, which avoids conflict with any potential nesting of threatened or endangered species and reduces the potential for impacts to wetlands and surface waters.
- If construction takes place outside of winter, then a responsible individual would ensure that anyone working on the project is trained to look for any potential nesting of threatened or endangered species within the project area.
- A Storm Water Pollution Prevention Plan (SWPPP) would be prepared for the project in accordance with the Alaska Pollution Discharge Elimination System, Construction General Permit. A certified individual would perform Inspections, and ensure the proper installation of Best Management Practices (BMPs).
- Onsite environmental compliance monitoring by a qualified environmental inspector would be performed to ensure that the embankment is maintained within the fill limits and pollution sources are prevented from entering the surrounding wetlands.
- Disturbed areas will be re-vegetated using native vegetation in accordance with the projects SWPPP.

2.2.2 No Action

The No Action alternative would maintain the current baseline situation in Chefornak. The community would continue to utilize an aging water point distribution system and residents would continue to rely on the few functioning water dispensing points for their supply. The water dispensing points would continue to be energy inefficient. The distance traveled from home to the still functioning watering points would remain higher than necessary. Rain, melted ice chips, and purchase of bottled water from the store would continue to supplement the available water. The sewage from the School and the temporary washeteria would continue to overflow from the unpermitted School tundra pond lagoon.

The disposal of sewage by residents without appropriate personal protective equipment would continue. The bucket-dumping site which receives the bagged sewage would remain incapable of properly treating it. The potential for contracting a sewage-borne communicable illness at the dumping site would remain. The site would continue to be unable to obtain a permit. Residents would continue to be unable to locate the boundary of the bucket dumpsite in the winter without a fence.

The No Action alternative would not address the human health risk associated with unsanitary conditions, including; insufficient quantity of potable water, inadequate quality of water for drinking, and unsafe disposal of wastewater.

The No Action alternative would not address the community's need for improved facilities as described in the Selected Water and Wastewater Alternatives (CE2, 2013a).

2.2.3 Alternatives Considered but Eliminated from Evaluation

This EA will not present a detailed analysis of the following alternatives.

2.2.3.1 Piped Water and Sewer to Homes

Extensive effort has previously been made looking for plentiful, high-quality water to support a piped water distribution system for individual residents. Since a plentiful source of quality water has not been found the City would have to treat the water used for a piped system. No affordable means of treating Chefornak's water to support piped water was found. In 2009, the Chefornak Council passed a resolution that accepted community infrastructure. The proposed infrastructure is described in this Selected Water and Wastewater Alternatives Analysis.

2.2.3.2 Purchasing Treated Water from the School

The quality of water at the School is acceptable but has been determined by previous evaluation to be unaffordable if piped to individual residents. Furthermore, the Superintendent of the Lower Kuskokwim School District has stated that the School district does not want to become a water purveyor for the community.

2.2.3.3 Small Closed Haul

A 1998 pilot project tested holding tanks and haul for a few homes. High snow drifts limited access to the water storage tanks for refilling and pumping out in the winter. The Tribal Office and the Chefornak City office, for example, use a bucket system rather than using the installed plumbing due to system un-reliability. The cost to serve the remaining homes by haul is subsidized.

2.2.3.4 Other Locations for the Sewage Treatment Lagoon

In the middle 2000's, the project performed a geotechnical investigation of a different proposed site southeast of the existing residential area. The City Council did not support the proposed site, and it was dropped from further evaluation. In 2008, the new lagoon site was jointly selected by the City Council, the Traditional Council, and the Corporation.

2.2.3.5 Locating the Washeteria near the Clinic

Minimizing the cost of laundry is critical to providing a health benefit. Only by locating the laundry adjacent to the existing power plant can waste heat offset operating costs. The power plant is in a central location near the School, tribal office, City office, and store. The proximity of the washeteria to the force main is also a savings in operating costs. The washeteria location was discussed at a City Council meeting during a course of interviews regarding residential water use habits and preferences.

2.2.3.6 Constructing a Total Retention Lagoon

Constructing a total retention lagoon was considered and determined not to be a feasible option. Unfortunately, there is no subsurface layer that could accept the volume of wastewater generated by Chefornak.

2.3 Comparison of Alternatives

This EA analyzes only two alternatives in detail: the No Action alternative and the Proposed Action. These two alternatives represent an acceptable range of reasonable alternatives. As discussed above, the Proposed Action meets the project's purpose and need and the developed design criteria, especially the preferences of both the Chefornak City Council and community residents. Also, the overall impacts of the Proposed Action are such that no environmental issues (resource impacts) constitute "unresolved conflicts about alternative uses of resources" (NEPA, Section 102). Table 2 below evaluates each alternative considered.

Table 2 Evaluation of Alternatives by Design Criteria

Design Criteria	Alternatives	
	Proposed Action	**No Action**
Drinking Water	The Proposed Action does meet the drinking water design criteria because it would continue to provide water at watering points and washeteria, and serve the School and the clinic.	The No Action alternative does not meet this criteria because without upgrading the community well and 12 watering points, it would not be feasible to continue providing water for the washeteria, as well as, serve the School and clinic.
Sewer	The Proposed Action does meet this criteria and would provide piped sewer service from the washeteria to the sewer main with eventual disposal in a community sewage lagoon. The Proposed Action would also provide for disposal in compliance with water quality permit standards (18 AAC 70).	The No Action alternative does not meet this criteria because piped sewer service from the washeteria to the sewer main with eventual disposal in a community sewage lagoon would not be achieved. Nor are the current waste disposal practices in compliance with water quality permit standards (18 AAC 70).
Floodplains	The Proposed Action does meet this criteria because all facilities would be built outside of the 100-year floodplain. In areas where avoidance is not possible, the structures would be designed to withstand the 100-year flood event.	The No Action alternative does meet this criteria because no facilities would be built within the 100-year floodplain.
Solid Waste	The Proposed Action does meet this criteria and would not constitute an increase to capacity or capita served by the solid waste facility. All solid waste generated from construction would be disposed of at the existing landfill and would not generate more solid waste than the existing facility can handle.	The No Action alternative does not meet this criteria because the current solid waste capacity will continue to increase without an alternative location allocated to receive honeybucket waste.
Energy	The Proposed Action does meet this criteria because it would not exceed the community's energy generating capacity.	The No Action alternative does meet this criteria because the community is currently within its energy generating capacity.
Economic	The Proposed Action does meet this criteria because the project is fundable by funding agencies and has reasonable and feasible construction costs. The project would have affordable user fees as well as achievable operations and maintenance costs.	This criteria is non-applicable to the No Action alternative.
Community Resources	The Proposed Action does meet this criteria because the project would require no authority outside of the utility, and require no additional participation from within the community. The washeteria would be close to the new power plant for utilizing waste heat recovery from engine jacket rejected heat.	The No Action alternative does meet this criteria because it would require no authority outside of the utility, and require no additional participation from within the community.
Accessibility	The Proposed Action does meet this criteria because major components of the Proposed Action would be within easy access of the public.	The No Action alternative does not meet this criteria because it requires great effort by the community to travel the 2,200 feet round trip to the sewage lagoon. The lagoon is also unsafe to access without a prepared boardwalk and fence around existing contaminated area.

Table 3 Evaluation of Alternatives by Resource Areas Impacted

Table 3 Evaluation of Alternatives by Resource Areas Impacted		
Resource Area Impacted	**Alternatives**	
	Proposed Action	**No Action**
Air Quality	• Controlled bucket dumping at the sewage transfer station would allow localized odor control for all sewage. • Odor of the bucket dump-site would not continue to increase from continued use of the existing honeybucket dumpsite.	• The offensive odor at the bucket dump-site and the School Sewage Lagoon would continue to be an intermittent problem. • Odor conditions would remain the same, or increase.
Water Resources, Floodplains, & Wetlands	• All engineering designs would be required to withstand potential flooding events. • The lagoon would be engineered to avoid impact on the ground water and water supply. • Reduced wetland impacts are expected from the cessation of wastewater discharge to, and from, the unpermitted tundra pond. • Construction activities would have limited or no impact on surface waters. A SWPPP would be followed, to prevent sediment from reaching surface water. • Additional 30,000 gallons of emergency water storage including 22,000 gallons in the bolted tank, and 8,000 gallons at the pump houses, added to the 20,000 gallons in the School building for a total supply of 50,000 gallons in the event of an emergency.	• The current saline well water may gradually degrade under the School's increased load. • The current infrastructure does not promote additional water use. • The quantity and flow patterns of current surface waters would remain unchanged. • The tundra pond currently receiving sewage would continue uncontrolled overflow.
Wildlife Resources: Including T&E & Invasive Species	• Not expected to cause impacts to the Spectacled and/or Steller's eiders. • US Fish and Wildlife Service provided letters concurring that no effect on the endangered and threatened species due to construction activities are expected, given that project construction in undeveloped areas would be scheduled to avoid nesting season. • Construction activities in developed areas are not considered impacts to nesting habitat.	• No impact.
Socioeconomic and Environmental Justice	• An estimated ten seasonal construction job could be created adding several hundred thousand dollars to the local economy. • Estimated fees for the new services are expected to be comparable to existing fees. • New Pumphouse #2 would serve as an alternate source to reduce the load on the original well, and provide redundancy. • Less energy required by residents for proper disposal.	• Eventual increase cost of O&M due to continued degradation of existing infrastructure • Current employment would remain unchanged. • Services would continue to be subsidized. • Continued amount of energy presently used by the treatment plant treating water and sewage at the School.

Table 3 Evaluation of Alternatives by Resource Areas Impacted		
Resource Area Impacted	**Alternatives**	
	Proposed Action	**No Action**
	• The fence and boardwalk would provide for additional safety when the lagoon is being accessed. • Expected long-term energy reduction from replacing energy demanding equipment with infrastructure designed for energy efficiency. • No additional fees would be assessed. • No capital expenses would occur. • The project would provide the local government with expense data and assist in setting prices.	
Land Use	• Central location for honeybucket dumping station. • A sewage treatment facility to accommodate current and future needs. • The treated effluent from the new lagoon would flow through a diffuser hose over a 500-foot by 500-foot area of tundra within the boundary of the City's land.	• No part of the current sewage system in Chefornak has, or can receive, a permit. • 2,200 feet round trip to the sewage lagoon.
Public Health	• The laundromat can assist in skin illness transmission through heat drying of pathogens • Reduced exposure to public from hazardous waste. • Reduce risk to human health.	• Does not meet EPA Secondary Standard for drinking water.

Based on the above evaluation, the proposed Community Infrastructure Upgrades meets both the design criteria and the purpose and need, and therefore is the selected Proposed Action.

3.0 Affected Environment and Environmental Consequences

This section of the EA discusses the existing conditions and environmental impacts of alternatives described in Section 2.0, including direct, indirect, and cumulative effects. This section also addresses issues identified through early agency coordination and the public scoping process (Council of Environmental Quality [CEQ] Regulations §1501.7 Scoping). Refer to Section 1.4 for discussion of early coordination efforts and support by government agencies. Impact Analysis is organized by relevant resource areas as they relate to each alternative, and identifies measures proposed to mitigate adverse environmental impacts of the alternatives (CEQ Regulations §1508.20 Mitigation). Presented below are the relevant resource areas that have been found to have potential impacts from either the Proposed Action or the No Action alternative.

3.1 Air Quality

3.1.1 Existing Conditions

From a regulatory standpoint, air quality within Chefornak is currently good. Chefornak is in an attainment area for National Ambient Air Quality Standard (NAAQS) pollutants (EPA, 2014) and therefore meets standards. Two sources of odor have been reported: the bucket dump-site located 1,000 feet out of town, and the School Tundra Pond Lagoon. Unpleasant odors from the tundra pond vary with the wind direction. Spring thaw increases the odor at the bucket dump-site (Randlett, 2014).

3.1.2 Impacts and Mitigation

The Proposed Action would result in reduced odor than currently experienced at the existing dump sites. The engineered lagoon would reduce the period of odor to two, one-week periods when the ice first melts, and again at the end of the fall. The odor would be approximately twice as far (approximately 1,500 feet further) from the community as the current tundra pond and consolidate waste streams from the School and City. An enclosed Sewage Transfer Station, as part of the proposed project, would be designed to minimize odor. By bringing the bucket waste to the Sewage Transfer Station, the odor control can be better targeted than at the open dumping area. Odor reduction would be a design goal for the Sewage Transfer Station. However, odor from the exiting sites would remain until funds could be obtained to properly close these areas. Therefore, construction of the Proposed Action is expected to result in a negligible increase in odor to the community of Chefornak.

The Chefornak area is wet and dust from construction is unlikely to be of concern in the community. If dust does become an issue, water would be applied to exposed soil as needed and in conformance with the SWPPP requirements. Therefore no impact from dust is anticipated.

Under the No Action alternative, the proposed project would not be built and human exposure to sewage, without the use of personal protective equipment, would continue. The offensive odor at the bucket dump site and the School Sewage Lagoon would continue to be an intermittent problem. Odor conditions would remain the same, or increase as the dump locations continue to be used. The bucket dump site would continue to be uncontrolled and, therefore, a source of odor outside Chefornak. Odor from the School tundra pond would continue to be uncontrolled, noticeable, and objectionable.

3.2 Water Resources and Wetlands

3.2.1 Surface Waters and Wetlands

3.2.1.1 Existing Conditions

The ground surface in the area is generally flat, treeless, and covered with many small mats or tundra that remains wet until freeze up. Chefornak lies at the junction of the Keguk and Kinia rivers. The Kinia River drains Dall Lake and numerous smaller lakes. Extensive areas of wetland habitat within the Chefornak area are a result of low relief, poor drainage, proximity to the Kinia River, and underlying permafrost. A large portion of wetlands in the area around the community is subject to periodic flooding from the Kinia River and, to a lesser extent, from the Keguk River. Wetland communities consist of two main types of palustrine wetlands: scrub shrub, and emergent persistent wetlands (Cowardin et al., 1979). The areas surrounding the community are almost entirely composed of wetlands.

The extensive wetland area around Chefornak had led to the construction of a boardwalk system for travel throughout the community. Portions of wetland in the study area have been disturbed by past activities such as use of all-terrain vehicles and the development of access roads. Wetland areas around the Chefornak Airport were filled to create the runway, taxiway, and airport facilities. In several areas, the past activities have substantially modified existing wetlands by removing the insulating vegetation, thereby degrading the permafrost layer and creating trenches of standing water with emergent vegetation.

The open water areas within the vicinity of the project consist primarily of small ponds and lakes. Most ponds consist of open water with limited emergent vegetation along their perimeters.

Wetland functions are the natural processes that occur in a wetland, grouped broadly as habitat, hydrologic, or water quality, which make the wetlands useful or valuable. Wetland values are social benefits or opportunities that wetlands provide for people. The primary functions of wetlands in the study area include recharge and discharge of groundwater, control or moderation of flood intensity, and wildlife habitat. The primary values of wetlands in the study area include recreation, subsistence hunting and gathering, nature appreciation, wildlife viewing, and aesthetic opportunities.

Water resources in the Chefornak area include surface water bodies and groundwater. Several surface water bodies are located within or near the study area including the City's existing sewage lagoon.

The sewage disposal in Chefornak is uncontrolled. The tundra pond receives sewage from the temporary washeteria and the School overflows, and is not protected from flooding. The plastic bags dumped at the bucket dump-site prevent the natural decomposition of sewage, and are likewise uncontrolled. Approximately 1,500 buckets of human waste are additionally dumped annually directly into the river (Randlett, 2014).

3.2.1.2 Impacts and Mitigation

The Proposed Action would result in the direct loss of approximately seven acres of wetlands with six and a half acres from construction of the new sewage lagoon (Figure 2). Wetlands that would be impacted by the Proposed Action are common to and encompass the entire region. No unique or rare wetlands would be affected.

Impacts to surrounding wetlands would be minimized by limiting earth moving activities to winter months and confining activities to the project limits.

The new lagoon would hold approximately 3,000,000 gallons of treated effluent originating from the School, washeteria, and sewage transfer station. Once the sewage lagoon is operational, treated sewage would be discharged twice a year within a wetland area encompassing approximately 5.7 acres (500 feet by 500 feet). Potential discharge volumes of approximately 2,300,000 gallons of treated effluent are anticipated during each discharge event. The treated effluent from the new lagoon would flow through a diffuser hose within the boundary of the City's land. The anticipated discharge water depth would be approximately one inch, as the water is absorbed by the adjacent wetlands. Water quality would be maintained by verifying the quality of the treated water through laboratory testing before it is discharged as required by the ADEC permit stipulations (Appendix D).

The Proposed Action is expected to improve the quality of Chefornak's nearby wetlands by centralizing the disposal of human waste into a single, engineered lagoon for treatment to secondary standards, rather than splitting waste disposal between a dump site, a tundra pond, and the river. The runoff from the bucket dump area would dissipate as new buckets are dumped into the bucket transfer station. The landfill area runoff may remain until equipment and cover are obtained for proper operation. With the implementation of the project SWPPP, construction would be geared to prevent any impacts from material, fuel, or sediment affecting the surrounding wetlands or surface water. The Kinia River quality would also improve when waste is no longer dumped directly into the river.

The proposed project is not expected to increase the amount of sediment in the Kinia River or the tundra. Silt would be conserved from the lagoon excavation, drained over the summer, and formed into the lagoon berms the following winter. There are no roads, gutters, or storm water sewers in Chefornak. Potential impacts from storm water during construction have the possibility to impact surface water turbidity and quality through excess runoff. Those potential impacts would be mitigated by implementing a SWPPP and associated BMPs.

The quantity and flow patterns of current surface waters, and wetlands, would remain unchanged under the No Action alternative. Surface waters and wetlands would continue to be degraded by uncontrolled sewage runoff. An unmeasured quantity of sewage also would increase the potential of overflow onto the tundra from the effluent flowing to the School tundra pond lagoon.

During construction, an on-site qualified environmental inspector would perform compliance monitoring to ensure that the embankment is maintained within the fill limits and pollution sources are prevented from entering the surrounding wetlands. Compensatory mitigation could be required as part of the USACE Section 404 Permit for placement of fill in jurisdictional wetlands.

3.2.2 Floodplains

Executive Order (EO) 11988 sought to reinforce the need to (1) strengthen Federal Policies to reduce the risk of flood losses; (2) minimize the effect of floods on human safety, health, and welfare; and (3) restore and preserve natural floodplain values. To meet these objectives, the EO requires IHS to:

- Recognize that floodplains have unique and significant public values;
- Consider the natural and beneficial values of floodplains and the public benefits to be derived from floodplain restoration or preservation;
- Avoid, to the extent possible, the long-term and short-term adverse effects associated with occupancy and modification of floodplains; and
- Avoid direct and indirect support of floodplain development when there is no practical alternative.

3.2.2.1 Existing Conditions

Flooding is a minimal hazard in Chefornak as the community is located on a raised outcropping of rock, which protects it from river flooding. However, the area adjacent to the community is relatively flat and is subject to periodic flooding caused by snow-melt, rainfall runoff, and occasional high water from the Kinia River. Snowmelt run-off and rainfall flooding occurs during spring thaw and the fall rainy season as a result of soil saturation (City of Chefornak, 2014).

Snowmelt floods typically occur from April through June. The depths of the snowpack and spring weather patterns influence the magnitude of flooding. Rainfall-runoff flooding occurs in late summer and early fall. The rainfall intensity, duration, distribution, and geomorphic characteristics of the watershed all play a role in determining the magnitude of the flood. Rainfall runoff flooding is the most common type of flood. This type of flood event generally results from weather systems that have associated prolonged rainfall.

The City of Chefornak does not participate in the National Flood Insurance Program, but some flood hazard information is available for the project area from the USACE flood hazard webpage (USACE, 2008). The USACE describes the flood hazard potential for the community as follows:

> *"The community is at the junction of the Keguk and Kinia Rivers. The Kinia River drains Dall Lake and numerous smaller lakes. Due to lake regulation the maximum flood level should not vary rapidly in stage. The village is located on a small rock outcropping and has 3-4 feet of freeboard above the flood stage. There is no record of flooding in the community. However, the surrounding area is extremely low and is subject to frequent flooding."*

An additional floodplains review was completed by CE2 (CE2, 2013b). This assessment was based on imagery analysis and states that:

> *"The apparent highest elevation of approximately 114 feet occurs north of the Health Clinic and the lowest of approximately 78 occurs at the Kinia River bank near the Water Treatment Plant (WTP). The area near the WTP and National Guard armory has not flooded within memory of community residents nor is there any history of this area flooding. The Kinia River elevation on July 7, 2011 was 74.91. Flotsam mounds along the river bank indicate high water elevations of 76.8."*

The presence of flotsam mounds (debris deposited from the river) provides historic evidence for a flood

elevation of 76.8 feet for the City of Chefornak.

3.2.2.2 Impacts and Mitigations

Some aspects of the Proposed Action, such as the water treatment plant, washeteria, watering points, water storage tank, and pumphouses would not be located within the floodplain. A 2013 CE2 report shows that the ground elevation in those areas is approximately 95 feet, which is well above historical high water.

The remaining elements of the Proposed Action include the sewage lagoon and force main extension and associated boardwalk. These components are located entirely within relative low flat wetlands. Design drawings from CE2 Engineers Inc., dated February 2014, show surface elevations for the sewage lagoon of between approximately 77 and 79 feet. Based on their finding of flotsam mounds very near the base elevation of the sewage lagoon and force main, and confirmation from the USACE that the community has 3-4 feet of freeboard at flood stage, it is likely that a portion exists within the floodplain.

The area surrounding the community is comprised of relatively uniform flat topography. Locating the sewage lagoon outside of the floodplain would involve relocating more than twice the distance from the community and could not be accomplished within City land and boundaries. Therefore, there is no practical alternative that avoids placement within the floodplain. However, due to the relatively similar elevation and vast expanse of the floodplain in relation to the fill area of approximately eight acres, impacts to the floodplain are considered negligible.

Although the Proposed Action would result in temporary impacts to the floodplain (e.g., temporary removal of vegetation, excavation and fill activities, and increased sediment flow) during construction activities, VSW would utilize standard sedimentation and erosion control BMPs to minimize such impacts. Types of BMPs to be used are re-vegetation with native species, installation of silt fences and the use of vegetated buffers. The only permanent impact to the floodplain would be an overall improvement to water quality, as raw sewage would be removed from the community and deposited within the new sewage lagoon. To avoid impediments to the movement of floodwaters, the Proposed Action would engineer all structures to withstand a flood event.

Footprints for project activities have been reduced to the smallest possible area and sediment and erosion control BMPs would be used during all ground disturbing activities. Re-vegetation would be initiated on areas of ground disturbance. All project structures with the exception of the force main and sewage lagoon are located at least one foot above the flood elevation. The force main would be located on a raised pile at an elevation of 80 feet. The sewage lagoon berm height would be 83 feet in elevation, 10 feet wide at the top and 30 feet wide at the base. The core of the berm would be composed of geotextile wrapped silt for added stability. The outside surface of the sewage lagoon would be covered with a 12-inch layer of organic material and seeded and eventually vegetated. Based on the engineered design (Appendix E) it is unlikely that a flood event would have an impact on either structure.

The IHS follows a Class Review process for determining actions that do not place persons or property at risk. The Proposed Action did not qualify for an IHS Class Review under Executive Order 11988.

Based on the evaluation action alternatives, avoidance of the floodplains is not possible and further evaluation is required. The 8-Step Process for review of the Proposed Action is included as Appendix B.

The No Action alternative would not result in any impacts to the floodplain. Conditions would continue as they currently exist, and the risk of flooding in the community would remain low.

3.2.3 Ground Water

3.2.3.1 Existing Conditions

In locations where significant permafrost is present, groundwater can occur as a supra-permafrost aquifer and sub-permafrost aquifer. The supra-permafrost aquifer refers to water above the permafrost, within the active layer. In areas of shallow permafrost, the supra-permafrost aquifer is limited in thickness and often of low quality as a drinking water resource. The sub-permafrost aquifer lies below permafrost and is typically more extensive and of higher quality as a drinking water source. In areas where no permafrost exists, such as around large water bodies, groundwater is controlled by bedrock or shallow impermeable soil horizons, and separate aquifers may not be present. Both the Kinia River and the groundwater aquifer are brackish and of low quality.

Groundwater in the Chefornak area is currently used as a drinking water source, and drinking water resources may be further developed in the future. Groundwater is used for the existing municipal water supply system, which serves the School and washeteria and 12 water gathering points (DCCED, 2013). The municipal water supply system consists of one primary well. Two additional wells were drilled by the community in 2002, but are not currently connected to the system. The groundwater aquifer of the wells included in this project is about two hundred feet below ground. The aquifer is less brackish than the Kinia River.

3.2.3.2 Impacts and Mitigation

Impacts to the groundwater aquifer are not anticipated as a result of the Proposed Action. The existing aquifer is located about two hundred feet below the ground surface and is sufficiently protected from any potential runoff that could result from the bucket dump area. The project would increase the number of active wells serving the community from one to three. The wells at Pumphouse #2 would alternate with Pumphouse #1, resulting in no significant net loss of groundwater. Similarly, current surface conditions and seasonal discharge would have little or no effect on groundwater. The water use of up to 10,000 gallons a day for the School, washeteria, and watering points is within the water productive capacity of the wells. The addition of the two new wells is anticipated to reduce the potential for salt water intrusion into the surrounding groundwater by reducing the demand at each well.

Under the No Action alternative Pumphouse #2 would not be constructed and the water supply for the City would continue to come from a single well. No reduction in TDS could be realized through bringing on the additional water source and by reducing the water demand in any one well.

3.3 Wildlife Resources

Components of wildlife resources that are relevant to the project alternatives are limited to protected species that could exist within the project area. Potential impacts on these wildlife resources are discussed in the following section.

3.3.1 Existing Conditions

Protected species that could exist within the project area include the spectacled eider (*Somateria fisheri*) and Steller's eiders (*Polysticta Stelleri*). Spectacled eiders were listed as threatened under the endangered

species act in 1993 throughout its range (58 FR 27474) and the Steller's eider was added as Threatened in Alaska in 1997 (62 FR 31748).

Eiders are diving ducks that spend most of the year in shallow, near-shore marine waters. They feed by diving and dabbling for mollusks and crustaceans in shallow water. In summer, they nest in tundra adjacent to small ponds or within drained lake basins and wetlands. The USFS has mapped the area surrounding Chefornak as a breeding area for both species of eider. Nesting can occur immediately following breakup and successful females and young can stay through early September (USFWS 2003, 2011).

According to the Chefornak City Clerk, Spectacled and Steller's eiders have not be seen nesting near the City or proposed lagoon areas and are only seen around the coast of the Bering Sea (Anderson, 2014).

3.3.2 Impacts and Mitigation

The proposed project is not expected to cause impacts to the Spectacled and/or Steller's Eiders. These species do not normally nest locally to Chefornak but they do routinely choose to nest in undisturbed tundra areas. Eiders have been observed on the Bering Sea, which is approximately five miles to the west of Chefornak.

Consultation with the USFWS was initiated in 2011 and again following redesign of the sewage lagoon in 2013. In response to initiated consultation by VSW, the USFWS provided consultation letter 2011-0147 concluding that the project affect, but is not likely to adversely affect the Steller's and spectacled eiders (Appendix F). The USFWS concluded that due to winter construction schedule, the potential for effect was reduced. In addition, the commitment of VSW to train construction workers to look for nests during construction in undeveloped areas would further reduce the potential affect to nesting eiders. If nests are located on the project construction activities must be halted until after July 15. Work may continue in areas where the ground has been disturbed prior to April 15, as eiders are unlikely to select nest sites in previously disturbed areas. Consultation was reinitiated in 2013 and resulted in no change to the original 2011 findings.

With the No Action alternative, the project would not be built and the effects to protected species would remain unchanged.

3.4 Socioeconomic Issues and Environmental Justice

Socioeconomics addresses the basic characteristics and resources associated with the human environment, particularly population and economic activity. Human population is affected by regional birth and death rates, as well as, net immigration and emigration. Economic activity typically comprises employment, wages and personal income, public finance characteristics, and commercial and industrial growth. Impacts on these fundamental socioeconomic indicators also can influence other components, such as availability of housing and provision of public services. However, because implementation of the proposed project would not affect housing affordability and availability, provision of public services, or public finance mechanisms, these socioeconomic components are not examined in this EA.

Executive Order 12898, Federal Actions to Address Environmental Justice in Minority and Low-Income Populations, directs federal agencies to identify and address disproportionately high and adverse effects of federal projects on the health or environment of minority and low-income populations to the greatest extent practicable and permitted by law (Clinton, 1994).

3.4.1 Existing Conditions

Data used to assess environmental justice considerations were obtained from several sources. The U.S. Census Bureau, (Census, 2010), is the most complete and accurate source of demographic data and economic/income data available for the City of Chefornak. The Chefornak Community Profile from the Alaska DCCED website was also used as a supplemental source of information (DCCED, 2013).

Based on Federal policy, Chefornak is a minority or low-income community; with residents employed by the City and Tribal Offices, the School, the US Post Office, commercial fishing, trapping, and local businesses (DCCED, 2013).

In 2010 there were 418 residents of Chefornak in 99 households (Tables 4 and 5). All residents lived in households rather than group quarters. The racial composition of the community was as follows: Alaska Native or American Indian (95.69 percent [%]), White (3.35%), and two or more races (4.6%). A total of 98% of the population recognized themselves as all or part Alaska Native or American Indian. The gender makeup was not hugely disparate, at 51.5% male and 48.5% female. The median age in the community, 22 years, was quite a bit younger than the national average of 35.3 years. Approximately 60.2% of the residents 25 years of age and older had a high school degree or higher level of education.

Table 4 City of Chefornak Population 1970-2010

Population (2010 Census)	Year
146	1970
230	1980
320	1990
394	2000
418	2010

Table 5 Key 2010 Housing Data

Housing Characteristics (2010 Census)	
Total Housing Units	99
Occupied Households	92
Vacant Households	7
Owner-Occupied Housing:	52
Renter-Occupied Housing:	40
Average Household Size	4.52

Commercial fishing is the mainstay of the local economy. In addition subsistence fishing and hunting are important to nearly all residents of Chefornak. The median per capita income in 2010 was $8,474 and the median household income was $35,556 (Table 6). Unemployment in Chefornak was 7.9%, and 33.7% of residents 16 years and older were not in the labor force (i.e., not working in the labor force). Approximately 25.1% of individuals in the community lived below the poverty line.

Presently, the School (with the School construction camp feeding off of school processed water) and the public watering points consume approximately 3,500 gallons of water per day when school is in session. This volume of water does not provide for the demand/need from the residents. Additional quantities are needed to provide for sanitation of clothing and hand washing.

Table 6 Chefornak Cost of Living 2011

2011 Estimated	Average Monthly Rate	Times Paid per Year	Annual Amount
Income Per Household			
Median Household Income	$2,963.00	12	$35,556.00
		Total Median Income	**$35,556.00**
Expenses Per Household			
Housing	$100.00	12	$1,200.00
Food	$750.00	12	$9,000.00
Electricity			
Summer	$180.00	6	$1,080.00
Winter	$250.00	6	$1,500.00
Fuel – Diesel			
Summer	$160.00	6	$960.00
Winter	$350.00	6	$2,100.00
Gasoline	$250.00	12	$3,000.00
Water & Sewer	$25.00	12	$300.00
Telephone / Internet	$250.00	12	$3,000.00
Airfare	$375.00	4	$1,500.00
Clothing	$250.00	1	$250.00
Gifts / Holidays	$850.00	1	$850.00
Other	$800.00	12	$9,600.00
		Total Estimated Expense	**$34,340.00**
		Surplus/(Deficit)	**$1,216.00**

The following operation and maintenance costs are part of the Community's business plan. Table 7 shows the 2012 Community Business Plan monthly water and sewer user fee structure which provides revenue for operations and maintenance (City of Chefornak, 2012).

Table 7 Existing Monthly Sewer User Fee Structure 2012

Existing Monthly Sewer User Fee Structure 2012					
Water & Sewer Service Category	**Average per Month**	**Rate**	**Collection Rate**	**Monthly Revenue**	**Yearly Revenue**
Flush Service	2	$25.00	100%	$50.00	$600.00
Flush Service – Low Income	3	$12.50	100%	$37.50	$450.00
Water Tokens	200	$0.25	100%	$50.00	$600.00
Sanitation Service	25	$25.00	100%	$625.00	$7,000.00
Sanitation Service – Low Income	4	$12.50	100%	$50.00	$600.00
Water Delivery	1	$10.00	100%	$10.00	$120.00
Water Delivery – Low Income	5	$5.00	100%	$25.00	$300.00
Self-Haul	3	$200.00	100%	$600.00	$7,200.00
School Water	100,000	$0.06	100%	$6,000.00	$72,000.00
Local City Contribution					$15,000.00
Total Revenue					**$104,370.00**

3.4.2 Impacts and Mitigations

The Proposed Action would have no disproportionate adverse impacts to minority or low-income populations. Construction may create a minor beneficial effect to the community through local employment and business revenue opportunities for local residents, including the Tribal government and Alaska Natives. In addition, economic savings would incur from treating less drinking water.

IHS would pay the capital expenses for the project. Local workers would be employed to build the new infrastructure. The Council can request State assistance at any time to determine the actual cost of service, or evaluate the fees for services. The costs for the City and School for the shared lagoon would be negotiated before lagoon operation begins in 2015. The value of water at the watering points and washeteria would be calculated with an assumed usage, and then readjusted to cover the actual usage of the washeteria. The project would provide the local government with expense data and assist in setting prices. The utility would be expected to set aside funds for replacement items such as washing machines.

The community is not recovering all costs in the current fee structure. The total reliability and total cost of water service would be reduced by the energy efficiencies. The cost of bucket disposal is expected to be similar to the cost for pickup service. The final design would determine the precise cost allocable to specific services, and the community's choice about rate setting would determine final costs. An estimated 10 seasonal construction jobs could be created, adding several hundred thousand dollars to the local economy.

Estimated fees for the new services are expected to be comparable to existing fees. Additional costs, besides those for construction, would include ongoing operational and maintenance costs. These would be the responsibility of the City of Chefornak. Table 8 below summarizes the estimated operation and maintenance costs and shows an expected operations and maintenance cost of $193,151. In contrast, Table 7 shows 2012 revenues of $104,370 with more than $15,000 offset from bingo fees. This is a substantial increase (54%). The School would offset costs by paying for water service and for a portion of the wastewater sent to the force main, but there is currently no way of quantifying the offset. However, it is unlikely to offset more than 20 to 25%. VSW is currently revising operations and maintenance costs to more precisely estimate costs and cost-sharing. However, such an increase may require a resolution from the community acknowledging the increased operations and maintenance costs from the Proposed Action if the difference exceeds 5%.

Table 8 Estimated Annual Operation and Maintenance Costs

Proposed Action Annual Operation and Maintenance Cost *(Randlett, 2014)*					
Project Component	**Labor**	**Materials and Supplies**	**Energy**	**Administration**	**Component Subtotals**
Pumphouse #1 (replaces existing pumphouse)	$10,125	$1,500	$17,064	$1,434	$30,123
Pumphouse #2 (serving new well field)	$10,125	$1,500	$17,064	$1,434	$30,123
Upgraded watering points	$3,375	$1,900	$22,000	$1,364	$28,639
Washeteria and Water Storage Tank	$40,500	$2,500	$31,000	$3,700	$77,700
Force Main and New Wastewater Lagoon	$3,000	$1,500	$4,000	$425	$8,925
Sewage Transfer Station	$13,500	$1,500	$1,800	$840	$17,640
Totals	**$80,625**	**$10,400**	**$92,928**	**$9,198**	**$193,151**

Under the No Action alternative health risk related to inadequate water supply and unsanitary sewage disposal would continue to be adverse. No additional fees would be assessed. No capital expenses would occur. Current employment would remain unchanged. Services would continue to be subsidized. No additional utility operational expenses would be created. No capital expenses would occur if no construction were undertaken. Current utility worker employment would stay stable.

3.4.3 Subsistence Culture and Living

3.4.3.1 Existing Conditions

Subsistence refers to the customary and traditional non-commercial use of wild resources. Both federal and state subsistence programs limit subsistence hunting and fishing to rural areas of Alaska, which includes the Chefornak area. The collection of wild resources as a means of subsistence is important to many people living in Chefornak. The majority of Native households in Chefornak rely on subsistence foods such as fish, caribou, bear, waterfowl, and berries (Selkregg, 1976).

Locally, lands along the bank of the Kinia River are used by residents of Chefornak for fish harvest during summer, and likely for berry picking and other traditional subsistence harvest activities. No specific data are available for subsistence harvest activities within the study area (ADFG, 2014).

Subsistence fishing occurs throughout the year, although it primarily takes place during the open water season (spring through fall). Fish commonly harvested for subsistence include blackfish, salmon, tomcod, whitefish, halibut, and herring. Most subsistence fishing efforts focus on Kinia River salmon to harvest**.**

Moose is the primary large mammal taken by subsistence hunters in the Chefornak area; the most heavily used area is north and east of Chefornak (Anderson, 2014; ADFG, 2014). Small game such as hare, fox, and ptarmigan, are also harvested for subsistence use, although no high subsistence use areas have been identified for these species. Furbearing animals (beaver, muskrat, mink, river otter, Arctic fox, and red fox) are commonly trapped by Chefornak area residents for subsistence and commercial uses. Limited trapping and hunting may occur in the study area; predominantly for red fox and blackfish. Most subsistence hunting and fishing occurs outside the study area. Waterfowl are harvested near Chefornak, to the west and south of the Kinia River (ADFG, 2014). Some bird hunting does take place near the proposed sewage lagoon particularly in the spring time (Anderson, 2014) Delta wide, an average of 23 birds are harvested per household per year between 2001 and 2005 (USFWS, 2007).

Subsistence use of vegetation includes the harvest of many types of berries, and the harvest of trees for fuel and timber for building materials. Seasonal collection of subsistence vegetation occurs primarily east of the new runway.

3.4.3.2 Impacts and Mitigations

The Proposed Action would not likely reduce subsistence opportunities in the vicinity of the study area. Considering the proximity of the City of Chefornak to the sewage lagoon, the Chefornak Airport to the south, and the Kinia River to the north, subsistence activities are likely limited in the study area to harvesting of vegetation (berries, roots, and firewood) and some small game hunting. Subsistence fishing activities along the Kinia River would not be affected by project activities. Because the greater Chefornak region supports an abundance of fish, wildlife, and subsistence vegetation in areas used more traditionally for subsistence harvests, any displacement of subsistence activities caused by the proposed project would be negligible. Ms. Anderson, City Clerk, confirmed that the proposed project would not impact subsistence activities.

Under the No Action alternative, subsistence resources and uses would not change.

3.5 Land Use

3.5.1 Existing Conditions

Land Use

The City of Chefornak covers approximately 5.7 square miles of land which consists of mostly tundra and approximately 0.8 square miles of water. The surrounding landscape is primarily treeless, and covered with multiple lakes and ponds, varying in size from less than one acre to thousands of acres. Tern Mountain rises to an elevation of 431 feet, is of volcanic origin, and is located five miles south of Chefornak. The average elevations within the community and in the surrounding area range from 76 feet to more than 112 feet above mean sea level (DCCED, 2013).

The current land use of the community consists of a school, the School sewage lagoon, existing fuel tank farm, temporary washeteria & lift station, pump house, watering points, honeybucket dump site, land fill, community clinic, barge and boat landing area, and an airport. Ordinance 98-01 adopted in 1998 established the Chefornak Public Water and Sewer Department, where by deeming the City as the owner and operator of the utilities (DCCED, 2013).

There is a winter use trail that exists through the area proposed for the force main. Community members use the trail to access the river, in both the winter and the summer. It is also used for ATV use.

Contaminated Sites

There are five contaminated sites currently within the City limits listed on the ADEC Contaminated Sites Program Database (See Figure 2). Three near the existing fuel tank farm, one near the existing lift station, and one within the vicinity of the existing Pumphouse. Of the five sites listed Site #s 3779, 3780, 3776, (near the existing fuel tank farm) and 3782 (near Pumphouse #1) are active, while Site #3781 (near the existing lift station) has had cleanup complete with institutional controls. All of the contaminated sites have been excavated, and all but the one near the School still have Diesel Range Organic levels that are above cleanup standards. Site visits are still occurring for all of the sites every 1-2 years until a Cleanup Complete Determination is issued (ADEC, 2013).

3.5.2 Impacts and Mitigation

Land Use

The Proposed Action is anticipated to impact a small amount of land out of the total available for community use. The two-cell sewage discharge lagoon is approximately 1,900 feet from the existing community. There is no road access at this time. Proposed construction of the new lagoon is 400 feet by 735 feet and there is a 1,900-foot force main leading from the community center to the lagoon dumping site (Alaska Department of Natural Resources, 2011).

To mitigate the potential impact resulting from blocking the access trail by the force main, the proposed project includes a trail crossing. The crossing detail is included in the project plans located in Appendix E.

Implementation of the Proposed Action would impact approximately eight acres within the City, and would be used for that purpose in the foreseeable future and would remove the potential for it to be used for another function. Discharges from the new sewage treatment lagoon are anticipated to be contained within City

land (Randlett, 2014). As a result, no indirect impacts would be anticipated from water discharges to adjacent properties. Therefore impacts to land use are expected to be minor. The No Action alternative would not result in any impacts to current land use.

Contaminated Sites

No contaminated sites would be impacted by the Proposed Action. The closest known contaminated site to a project component is 656 feet (Site #3781). The next closest is Site #3782 which is 1,148 feet from the Pumphouse #1. In the event that contamination is encountered during construction, it would be addressed in accordance with applicable state and federal regulations.

3.6 Public Health

3.6.1 Existing Conditions

The existing water and sewer conditions within the community present public health risks. The potential for an outbreak of disease is always a possibility given the inadequate water and sewer conditions. Known health issues in the region are dermatological, gastrointestinal, and respiratory illnesses. These conditions are exasperated by the frugal use of water by local residents.

The existing well and water treatment plant that were constructed by the PHS, have been supplying water to the community through the water plant for over 40 years and is in need of upgrades and repair. The City water meets the primary health standard for drinking water, but the salt content is higher than the secondary standards the EPA has established for esthetics.

Water for drinking, cooking, personal hygiene, kitchen sanitation, home cleaning, home laundry, and steam bathing come from one or more of the following sources: treated water from an existing water dispensing point, rain collected off the roof in a rain barrel, chipped ice collected from specific ponds, spring water gathered by boat, and bottled water purchased at the Chefarnrmute Inc. store.

This volume of water does not provide for the demand/need from the residents. Additional quantities are needed to provide for sanitation of clothing and hand washing.

Limited existing sanitation services are currently located within Chefornak. Outhouses, originally attempted in the 1960's, are no longer present in Chefornak. The public School treats sewage with a membrane bio-reactor system, and the treated wastewater effluent, as well as the wastewater from the washeteria is discharged to the School Tundra Pond Lagoon, which is an unlined pond in direct contact with the tundra.

The potential for public health risks are present. With the existing water and sewer conditions, there is not ample water to allow for adequate hand washing, clothes washing, or for drinking. Known health issues in the region are dermatological, gastrointestinal and respiratory illness (Grinnell & Frasene, 2014)

The existing well and water treatment plant that was constructed by the PHS has been supplying water to the community through the water plant for over forty years and is in need of upgrades/repair. The City water meets the health standards for drinking water, but the salt content is more than the taste and color standards the EPA has established for esthetics. Table 6 shows the cost of living within the City of Chefornak.

3.6.2 Impacts and Mitigation

The implementation of the Proposed Action would contribute to the overall improvement of public and environmental health conditions. The Proposed Action would increase access to treated water, and reduce exposure to raw sewage. The installation of an engineered sewage lagoon, water treatment plant, sewage transfer station, washeteria and upgraded watering points would assist in alleviating these issues. The Proposed Action would accomplish the following:

- Help supplement the household water budget with a laundry and showers in the new washeteria, while also providing easier access to treated water for hand washing and prevent the spread of illness and pathogens.
- Upgrading current watering points would improve access to, and promote the use of treated water for ingestion.
- The sewage transfer station would reduce the distance of transport and exposure to sewage. The consolidation of all currently uncontrolled sewage in the new lagoon would also improve environmental health by reducing exposure to sewage.
- Provision of a washeteria sized so all residents can sanitize their clothing, would assist in reducing the contagious skin illnesses such as MRSA with the use of dryers. Any health gains can be leveraged with community education.
- Residents laundering at the new facility could repurpose the gallons of water currently brought into the home for laundry to prevent illness through less frugal use of water.
- The availability to homeowners of evidence-based BMPs for consuming rain, ice, and chlorinated water would allow educated choices on water consumption and use.
- Additional water would be made available through the Laundromat, which could create a 30-gallon surplus of water at home for hygienic use. The Proposed Action would supplement the household water budget with a laundry and showers. Both can help eliminate pathogens.
- Shortening the distance between the bucket dumping site and the residential area would reduce the temptation to dump sewage in the river.
- Brief increase in four wheeler traffic on the boardwalk during a three week period needed to transport gravel previously delivered by barge to the washeteria pad site.
- Long term reduction of 2,200-foot trips by self-haul and City-hauled buckets for disposal at the dumpsite.
- The sewage transfer station would centralize sewage to reduce traffic to the dump area, and to allow for more effective odor control.
- If a short outage is necessary during work on electric utility lines, the outage would be coordinated with the City of Chefornak to ensure that no vital services are interrupted and a time of day is selected that causes the least impact to residences.

High risk would decline substantially, likely reducing infant mortality, as well as gastrointestinal and tuberculosis related illnesses. Also, this decline in health risks contributes to the overall cumulative improvement of health conditions, both within Chefornak and in many of the nearby Alaskan villages.

The proposed project would provide beneficial effects to all residents by reducing illness and increasing safety of human health and the environment. In addition there would be no impacts to subsistence as a result of the Proposed Action.

Under the No Action alternative, the short term risks would compound as population increases, and the other conditions would remain unchanged. Alternative health risk related to inadequate water supply and unsanitary sewage disposal would continue to be adverse (CE2, 2013a).

3.7 Resource Areas Eliminated from Detailed Study

As determined by the Environmental Review Checklist, the following resources have been eliminated from further detailed review in this EA. Resources that were considered to have no measureable impacts to resources were eliminated. For example, no threatened or endangered species occur in the project area. In other cases, such as visual quality, impacts would be reduced by environmental commitments such as replanting disturbed areas with native vegetation. An Environmental Review Checklist was completed for the project and served as the basis along with project scoping for elimination of non-relevant resources. The Environmental Review checklist is included as Appendix F.

Resources eliminated include:

- Soil and Geologic Resources
- Vegetation Resources
- Recreation Resources
- Soundscape Resources
- Visual Resources
- Historic Properties

3.7.1 Soil and Geologic Resources

The landscape is covered with innumerable lakes and ponds varying in size from less than one acre to thousands of acres. The City rests on a volcanic deposit, which is overlain by gray organic silts. The volcanic rock layer varies from 5 to 45 feet below the ground surface. Surrounding terrain is typically flat, treeless tundra. An exception to the flat terrain consists of several individual peaks of volcanic origin.

Well logs and soil studies also indicate the area is underlain with permafrost soils.

Based on geotechnical and thermal studies conducted during final design to characterize permafrost conditions, structures would be designed and constructed to address impacts from any degradation of permafrost, thermal erosion, or subsidence. Mitigation measures may include removing unacceptable substrate prior to building the embankment, cutting the standing vegetation but leaving it in place and placing geotextile fabric over the surface prior to fill deposition, completing some construction activities in winter, minimizing disturbance to native vegetation outside of the embankment footprint, encouraging re-growth of disturbed areas, or using thermal siphons, which prevent the melting of permafrost.

A SWPPP would be prepared and implemented as part of the NPDES General Permit for Storm Water Discharges from Construction Activities, and BMPs would be employed to minimize the potential for erosion and sedimentation during construction. The embankment slopes would be stabilized upon completion of the project.

No adverse effects on soil and geologic resources are expected from the Proposed Action.

3.7.2 Vegetation Resources

Vegetation cover consists of grasses, mosses, and lichen on the tundra. The landscape is mostly treeless, with a few areas that are used to harvest berries. Disturbance to native vegetation outside of the embankment footprint would be minimized by limiting earth-moving equipment and fill-hauling trucks to areas within the footprint of the project or local roads whenever possible. Vegetation would be re-established on the embankment and dike slopes. Major construction would occur during the winter months. None of the berry picking areas are within the range of the Proposed Action, and are not expected to have any adverse effects.

3.7.3 Recreation Resources

The recreational resources are limited within the City of Chefornak. There is playground equipment on the School grounds, and ATV trails used recreationally year round. No adverse effects on recreational resources are expected from the Proposed Action. Existing trails would be maintained by installation of a winter trail crossing section through the force main.

3.7.4 Soundscape Resources

The expected increase in four wheeler traffic transporting gravel material would create a short-term noise impact to the local residents. In addition, construction excavation equipment would increase localized noise impacts in the course of excavating and building the community sewage lagoon and the force main. During construction, the contractor would use equipment with mufflers and make certain that equipment is in good working order. In the short-term, winter excavation would cause noise consistent with that of a D8 Dozer at approximately 2,000 feet from the community. Over the long-term, there is no increase in noise projected from the Proposed Action.

3.7.5 Visual Resources

The profile of the proposed sewage lagoon berm and the proposed force main would be visible from the community. Three new structurally insulated panel buildings (the washeteria, Pumphouse #1, and Pumphouse #2) would be visible within the local neighborhoods of the community. During public comment, one resident requested that the exterior color of the washeteria be selected to be visible both at night and during a white out. As a result of this comment, the community would make the color selection for all new construction. Short-term equipment emissions are not expected to be visible. The distance from which improvements can be seen, and the visibility of the buildings at a distance in snow and night conditions are considered minor impacts. After completion of the project, embankments and staging/stockpile areas would be re-vegetated so that they blend in color and texture with adjacent vegetated areas.

3.7.6 Historic Properties

Chefornak is in an area originally settled by Yup'ik Eskimos during the 1950's. Due to the relatively short amount of time that the City has been settled and incorporated, the proposed projects are not known to be located in the proximity of recognized cultural resources sites. State Historic Preservation Office (SHPO)

has been consulted regarding the proposed project. A January 20, 2003 review of the Alaska Heritage Resources Survey maintained by the SHPO, listed no historical sites located within the developed community or surrounding area (Appendix A).

No impacts are likely, given current information about the location of cultural resources. If cultural resources are discovered during construction, the SHPO and Traditional Council would be notified immediately. Also, if workers discover a cultural site or cultural artifacts, they would follow procedures as directed by The Native American Graves Protection and Repatriation Act, and The National Historic Preservation Act.

3.8 Cumulative Impacts

Code of Federal Regulations (CFR) implementing NEPA (40 CFR 1508.7) define a cumulative effect (cumulative impact) as "the impact on the environment, which results from the incremental impact of the action when added to other past, present, and reasonably foreseeable future actions regardless of what agency (federal or non-federal) or person undertakes such other actions. Cumulative impacts can result from individually minor but collectively significant actions taking place over a period of time."

The rising cost of energy, and the continued physical degradation of the water plant, watering points, temporary laundromat, haul service equipment, and tundra pond would reduce resident's access to treated water and bucket haul service. The reduction in water and sewage disposal access would provide a greater opportunity for any infectious disease present in the village to spread.

Cumulative impacts are present for only resource topics resulting in a measurable impact. Cumulative impacts from the Proposed Action would result from the overall improvement of health conditions within Chefornak. Cumulative impacts would also result from the overall improvement of economic growth within Chefornak. All of the cumulative impacts of the Proposed Action, while important, would be small and do not constitute significant impacts within the context of NEPA compliance.

For the purposes of this Cumulative Effects analysis, the geographic area is defined as the City of Chefornak, and the immediately adjacent area. The time frame for consideration of future cumulative impacts is five years. Five years was chosen to reasonably reflect projects that could be in the planning stages, are likely to occur, but perhaps not yet funded. Projects that may occur beyond five years are highly speculative in nature and are not reasonably foreseeable.

Past and present external actions include the City of Chefornak and its airport. Project data in the following table is from the 2014 Chefornak Hazard Mitigation Plan, and list of past and reasonably foreseeable future projects for the City of Chefornak. Table 9 below shows the past and future projects for the City of Chefornak.

Table 9 Past Present and Reasonably Foreseeable Future Actions

City of Chefornak Projects					
Agency	**Fiscal Year**	**Status**	**Project Description**	**Funded Stage**	**Total Cost**
ANTHC	2010	Funded	Water treatment plant and sewer service improvements in Chefornak Alaska.	Preliminary	$1,885,199
ANTHC	2010	Funded	Sewer improvements in Chefornak, Alaska.	Preliminary	$1,711,924
DOT/ PF	2010	Funded	Airport Relocation: This amendment increases the Fiscal year (FY) 10 Governor's Budget by 2,600,000 Federal Funds for a new FY10 project total of 16,000,000. Complete construction of a new airport. Reshape embankments and place surfacing material on runway, taxiway, apron, and access.	Preliminary	$16,000,000
Denali Commission	2010	Funded	Association of Village Council Presidents (AVCP) – Department of Energy (DOE) Energy Efficiency and Conservation Block Grant Match funding to the US DOE Efficiency and Conservation Block Grant (EECBG) program's Alaska Tribal Allocation through the American Recovery and Reinvestment Act (ARRA). The match funding from DC represents 10% of eligible applicant allocations for any approved energy efficiency.	In-Progress	$1,181,480
Housing and Urban Development (HUD)	2009	Funded	Indian Housing Block Grant (IHBG) - Comments: Native American Housing Assistance and Self Determination Act (NAHASDA) administration, operating and construction funds. Indian Housing Block Grant (IHBG) - Comments: Native American Housing Assistance and Self Determination Act (NAHASDA) administration, operating and construction funds	Contract	$253,943
DEED	2009	Funded	Chaptnguak K-12 School Renovation and Addition	Preliminary	$4,182,623
Denali Commission	2009	Funded	The scope of work under this Financial Assistance Award consists of provision by the RurAL Community Action Program, Inc., of project grant management and technical assistance to the City of Chefornak for Landfill Clean up and repairs.	Equipment Purchase	$40,000
DOT/PF	2009	Funded	Airport Relocation: Airport Improvement Program Construction	Preliminary	$7,600,000
HUD	2008	Funded	IHBG/NAHASDA administration, operating and construction funds.	Design	$223,814
DOT/ PF	2008	Funded	Airport Relocation Legislative Grant	Design	$754,000
BIA	2014	Funded	Boardwalk replacement	Contract	$1,000,000

Many projects have recently been completed in Chefornak including completion of the new airport located directly south of the old airport and renovations to the School. Future projects identified include the proposed boardwalk replacement to the existing honeybucket lagoon. The project is funded by the Bureau of Indian Affairs and is expected to cost approximately $1,000,000. The project is expected to be completed in a single season.

No measurable impacts to the physical environment are anticipated from the Proposed Action. Therefore the Proposed Action is expected to contribute no cumulative effects on the physical environment including air quality, geology and soils, soundscape, or water resources.

No cumulative effects are anticipated to fish and wildlife habitat or threatened or endangered species from implementation of the Proposed Action. Because no past, present, or future impacts to fish and wildlife habitat or threatened or endangered species have been identified, and no other foreseeable impacts from construction were identified, and no cumulative effects are expected.

There are reasonably foreseeable future actions that could interact with the Proposed Action to affect the human environment, and the potential cumulative effects of such interactions, are briefly discussed below.

The impact from increased employment due to the construction and implementation of the Proposed Action constitutes a minor cumulative impact because it contributes, if only in a minor way, to the overall economic growth of the City of Chefornak. There would also be a minor incremental increase in community expenses related to the Proposed Action. Finally, the Proposed Action is expected to have an incremental cumulative beneficial impact to the human health of community members by modernizing the water and wastewater infrastructure.

3.9 Unavoidable Adverse Impacts

Two resource impacts as discussed in the preceding subsections would represent unavoidable adverse impacts: (1) the potential for odors from the lagoon and sewage transfer station, and (2) visual quality changes. While adverse, neither of these would constitute significant impacts within the context of NEPA compliance.

Unavoidable or adverse impacts associated with the No Action alternative include continued elevated risk for disease borne illnesses resulting from contaminated water.

3.10 Irreversible and irretrievable Impacts

NEPA requires a review of significant irreversible and irretrievable effects that occur from development of the Proposed Action (40 CFR 1502.16). An irreversible commitment of resources is defined as the loss of future options and applies primarily to non-renewable resources, such as minerals or cultural resources, and to those factors that are renewable only over long time spans, such as soil productivity. Irretrievable commitments represent the loss of production, use, or commitment of renewable natural resources for the period of the Proposed Action (e.g., vegetation loss or wetlands productivity). These decisions are reversible, but the foregone utilization opportunities are irretrievable.

Under development of the Proposed Action irreversible and irretrievable commitments of resources would occur from the use of land, fill, electrical energy, fuel, and manpower. Land that would lie beneath the Proposed Action components represents the greatest irretrievable resource. The No Action alternative would have no change from the current commitment of resources.

3.11 Mitigation

This section provides a summary of environmental commitments and mitigation measures that would be implemented as necessary under the Proposed Action. The environmental commitments are also discussed in Section 2.0 Proposed Action and Alternatives and mitigation measures are also discussed in the Affected Environment and Impacts section (Section 3.0).

- Air Quality: BMPs, such as watering for dust suppression, would be implemented as needed during construction activities to mitigate fugitive dust emissions.
- Permafrost: Based on geotechnical and thermal studies conducted during final design to characterize permafrost conditions, structures would be designed and constructed to address impacts from any degradation of permafrost, thermal erosion, or subsidence. Mitigation measures may include removing unacceptable substrate prior to building the embankment, cutting the standing vegetation but leaving it in place and placing geotextile fabric over the surface prior to fill deposition, completing some construction activities in winter, minimizing disturbance to native vegetation outside of the embankment footprint, encouraging re-growth of disturbed areas, or using thermal siphons, which prevent the melting of permafrost.
- Soil Erosion: A SWPPP would be prepared and implemented as part of the NPDES General Permit for Storm Water Discharges from Construction Activities, and BMPs would be employed to minimize the potential for erosion and sedimentation during construction. The embankment slopes would be stabilized upon completion of the project.
- Water Quality: A SWPPP would be prepared and implemented for the project to obtain coverage under the NPDES General Permit for Storm Water Discharges from Construction Activities. Water quality impacts would be mitigated through application of established BMPs to control soil erosion during ground-disturbing activities. Water discharges from the sewage lagoon would not be conducted unless laboratory testing confirmed that the water met discharge guidelines in the ADEC discharge permit.
- Wetlands: During construction, appropriate BMPs for preventing sedimentation of adjoining wetlands would be employed, and on-site environmental compliance monitoring by a qualified environmental inspector would be performed to ensure that the embankment is maintained within the fill limits and pollution sources are prevented from entering the surrounding wetlands. Compensatory mitigation could be required as part of the USACE Section 404 Permit for placement of fill in jurisdictional wetlands.
- Vegetation/Habitat: Disturbance to native vegetation outside of the embankment footprint would be minimized by limiting earth-moving equipment and fill-hauling trucks to areas within the footprint of the project or local roads whenever possible. Vegetation would be re-established on the embankment and dike slopes. Major construction would occur during the winter months.
- Floodplains: All structures would be built outside of the 100-year floodplain. The sewage lagoon and force main would be designed to withstand the 100-year flood event.
- Visual: After completion of the project, embankments and staging/stockpile areas would be re-vegetated so that they blend in color and texture with adjacent vegetated areas. All new structures would be painted to be visible during night and in whiteout conditions.

- Noise: During construction, the contractor would use equipment with mufflers and make certain that equipment is in good working order.
- Utilities: If a short outage is necessary during work on electric utility lines, the outage would be coordinated with the City of Chefornak to ensure that no vital services are interrupted and a time of day is selected that causes the least impact to residences.
- Cultural Resources: Should construction activities unearth any archaeological or cultural resources, construction would be halted in the immediate area, and SHPO and local tribes would be contacted.
- Contaminated Sites: In the event that contamination is encountered during construction, it would be addressed in accordance with applicable state and federal regulations.
- Trails: Winter trails would be maintained by the addition of a crossing section on the new force main extension.
- Socioeconomics: If an increase in operations and maintenance costs exceeds 5% of current cost, then a resolution from the community acknowledging the increased operations and maintenance costs from the Proposed Action would be required.

4.0 Consultation and Coordination

During the preparation of project permits and this EA, federal, state, and local agencies and government officials, Native organizations, and the public were consulted to obtain pertinent information, identify issues and mitigating measures, and/or assist in the development of reasonable alternatives. Consultation and Coordination Letters are included in Appendix A. Consultation has continued with various agencies regarding specific issues. Organizations that have been contacted regarding the project are listed below:

- Federal Agencies
  - United States Army Corps of Engineers, Regulatory Branch, Anchorage, AK
  - United States Federal Aviation Administration, Anchorage, AK
  - United States Fish and Wildlife Service, Anchorage, AK
  - United States Environmental Protection Agency, Anchorage, AK
- State Agencies
  - Alaska Department of Environmental Conservation, Division of Water and Wastewater, Anchorage, AK
  - Alaska Department of Natural Resources, Office of History and Archaeology, Anchorage, AK
  - Alaska Department of Fish and Game, Subsistence Division, Anchorage, AK
- Local Officials, Agencies, Commissions, and Boards
  - City of Chefornak
  - Chefornak Traditional Council
- Tribal Organizations
  - Chefarnrmute Inc.
- Others
  - Chefornak residents

5.0 List of Preparers

List of Preparers

Function	Key Personnel	Organization	Education; Years' Experience
Conceptual Engineering		CE2 Engineers, Inc.	
Environmental Assessment Project Management	Brian Kovol REM	Midnight Sun Environmental, LLC	M.S. Biology; 18 years
Senior Review	Nicholas Henegan P.E.	Midnight Sun Environmental, LLC	M.S. Civil Engineering; 30 years
	Kim Kovol	Midnight Sun Environmental, LLC	B.A. Education; 12 years
Environmental Analysis	Krista Scott	Midnight Sun Environmental, LLC	M.S. Environmental Planning; 6 years
	Meghan Humphrey	Midnight Sun Environmental, LLC	B.S. Earth Science; 1 year
	Jamie Wade	Midnight Sun Environmental, LLC	M.S. Raptor Biology

Agency Advisors

Function	Key Personnel	Organization
Lead Agency (Indian Health Service)	Kevin Bingley	NEPA Coordinator
Agency Representative (Alaska Native Tribal Health Consortium)	Chris Vaught	Environmental Coordinator Supervisor
State Representative (Village Safe Water)	Adele Fetter	Environmental Impact Analyst
	Susan Randlett P.E.	Project Manager
	Greg Magee P.E.	Program Manager

6.0 References

Alaska Department of Commerce, Community, and Economic Development. (2009). *Alaska Community Database: Chefornak*. Retrieved from: http://commerce.alaska.gov/cra/DCRAExternal/community/Details/9ac24aaf-73bd-45f6-a5cd-be30f687c04d on August 5, 2014.

Alaska Department of Commerce, Community, and Economic Development. (2013). *RUBA Community Status Report.* Retrieved from: http://commerce.alaska.gov/dcra/ruba/report/ruba_public_report.cfm?rid=615&isruba=1 on July 18, 2014.

ADEC. (1984). *Sanitation Facility Improvements. Chefornak, Alaska.* Village Safe Water Program.

ADEC. (2011). *Underground Storage Tanks Database* (n.d.). Retrieved from: http://www.dec.state.ak.us/spar/ipp/ust/search/default.htm

ADEC. (2013). *List of Contaminated Site Summaries by Region.* (n.d.).Retrieved from: http://www.dec.state.ak.us/spar/csp/list.htm

Alaska Department of Labor. (2012). *Profile of General Demographic Characteristics*. ADOL Research and Analysis Section, Demographics Unit.

Alaska Department of Natural Resources. (2011). *Alaska Mapper.* (n.d.). Retrieved from: http://dnr.alaska.gov/MapAK/browser?map_select=&gsid=8EFEB4E8FAC109191F60AF5508A82DBC.tomcat-91

Alaska Department of Natural Resources, Division of Parks & Outdoor Recreation. (2013). *Individual State Park Units.* (n.d.). Retrieved from: http://dnr.alaska.gov/parks/units/index.htm

American Society of Civil Engineers. (1996). *Cold Regions Utilities Monograph*.

Anderson, Alexandra (2014). Email correspondence between Susan Randlett of Village Safe Water and Alexandra Anderson the Chefornak City Clerk, *Spectacled and Steller's eider have not be seen nesting near the city or proposed lagoon areas and are only seen around the coast of the Bering Sea*. March 11, 2014.

Anderson, Alexandra (2014). Email correspondence between Brian Kovol of MSE and Alexandra Anderson the Chefornak City Clerk. *Subsistence resources and use in Chefornak*. August

CE2 Engineers, Inc. (2000). *Memorandum Report: Preliminary Testing of the Well Field at Chefornak.* Warren, John. P.E.

CE2 Engineers, Inc. (2011). *Application for the Corps Permit.* (n.d.) Retrieved from http://dec.alaska.gov/water/vsw/ProjectSites/chefornakProject/pdfs/Corps%20Permit%20Request%20--%20110628%20Chefornak%20%20Corps%20Permit%20App%20(2).pdf

CE2 Engineers, Inc. (2013a). *Selected Water and Wastewater Alternatives: City of Chefornak*.

CE2 Engineers, Inc. (2013b). *Conceptual Design Memorandum Chefornak Washeteria and Water Storage Tank*. Weisner, Paul. P.E.

CEQ-Regulations. (2014). Retrieved on July 31, 2014 from: http://ceq.hss.doe.gov/nepa/regs/ceq/toc_ceq.htm

City of Chefornak. (2012). *City of Chefornak Sanitation Utilities Business Plan.*

City of Chefornak. (2014). City of Chefornak Draft Hazard Mitigation Plan. Hazard Mitigation Planning Team.

City of Chefornak Community Council. "Resolution 09-05 (2009) [Resolution in Support of Choice B Sanitation Facilities as the Final Level of Sanitation Improvements for the Community]". 9 July 2009.

Clinton, William Jefferson. (1994). Executive Order 12898, Federal Actions to Address Environmental Justice in Minority and Low-*Income Populations*. Retrieved from: http://www.epa.gov/swerffrr/documents/executive_order_12898.htm.

Cowardin, L., V. Carter, F. Golet, and E. Laroe. (1979). *Classification of Wetlands and Deepwater Habitats of the United States*. USFWS, Biological Services Program, Report FWS/OBS-79/31.

CRW Engineering Group, LLC. (2014). *Preliminary Engineering Report: Water Treatment Plant and Washeteria Facility Improvements, Tuluksak, Alaska.* Draft. May 2014.

Duane Miller & Associates. (1998). *Geotechnical Investigation Water and Sewer Projects Chefornak, Alaska.* Hendee, Mikal K. E.I.T. & Miller, Duane L. P.E.

Division of Spill Prevention and Response. (2014). *Contaminated Sites Program.* Retrieved from: http://dec.alaska.gov/applications/spar/CSPSearch/results.asp on August 19, 2014.

EPA National Ambient Air Quality Standards (2014) Retrieved from: http://www.epa.gov/air/criteria.html

EPA. (2009). *Air Non-Attainment and Maintenance Areas*. (n.d.).
Retrieved from: http://www.epa.gov/air/oaqps/greenbk/ancl3.html

EPA. (2013). *Superfund: Cleaning up the Nation's Hazardous Wastes Sites.* Retrieved from: http://www.epa.gov/superfund/index.htm

Federal Emergency Management Agency. (2013). *Current FEMA Issued Flood Maps.* Retrieved from: https://msc.fema.gov/portal/search?AddressQuery=Chefornak on August 1, 2014.

Golder Associates Inc. (2004). *Report on Groundwater Geophysical Survey Chefornak, Alaska.*

Grinnell, M., and T. Frasene. (2014). *Reportable Infectious Diseases in Alaska.* Department of Health and Social Services, Division of Public Health, Section of Epidemiology.

HDR Engineering. (1992). *Chefornak Water Sources.* Wheaton, Scott R.

HDR Engineering. (1993). *Community Water Sources for the City of Chefornak.* Shen, Elizabeth J.

Mael, B. (2012, June 22) *Chefornak Lagoon*. Retrieved from: http://www.youtube.com/watch?v=XFIpkd9kOvg

Parks Land Use. (n.d.). Retrieved, from http://dnr.alaska.gov/parks/units/index.htm on July 31, 2014

Randlett, Susan. (2014). Meeting with Village Safe Water, Chefornak point of contact. *Chefornak existing conditions, and Proposed Action design criteria*. On July 28, 2014.

Selkregg, L. (1976). *Alaska Regional Profiles, Yukon Region*. University of Alaska, Arctic Environmental Information and Data Center. Prepared for the Office of the Governor and the Joint Land Use Planning Commission for Alaska.

State of Alaska Village Safe Water Program. (2011). *Wastewater Lagoon & Force Main Design Analysis Report.* CE2 Engineers, Inc.

USACE. (2007). *Alaska Baseline Erosion Assessment.*

USACE. (2008). *Floodplain Management Service Directory for Alaska*. Retrieved from: http://66.223.166.160/floodplain_data/Chefornak/Documents/chefornak_summary_sheet.pdf

U.S Census Bureau. (2010). *Census 2010 information*. Retrieved from United States Census Bureau website March 24, 2004: http://www.census.gov.

USFWS. (2003). *Wildlife information sheets on Spectacled eiders September 2003*. Retrieved from: http://www.fws.gov/alaska/nwr/yukondelta/pdf/spei%20final%20web.pdf

USFWS. (2008). *Alaska Region Endangered Species Listing. Proposed Candidate and Delisted Species in Alaska, April 2008 and Programmatic Consultation (PC) signed January 28, 2008.* Retrieved from: http://alaska.fws.gov/fisheries/endangered/listing.htm

USFWS. (2007). *Subsistence Migratory Bird Harvest Survey, Yukon-Kuskokwim Delta 2001-2005*. Alaska Migratory Bird Co-Management Council in Cooperation with the Yukon Delta Wildlife Refuge. 206pp.

USFWS. (2011). *Wildlife information sheets on Steller's eiders September 2003 and August 2011*. Retrieved from: http://www.fws.gov/alaska/fisheries/fieldoffice/anchorage/endangered/pdf/factsheet_stei.pdf

USFWS. (2013). *Endangered Species Listing.* Retrieved from: http://www.fws.gov/alaska/fisheries/endangered/listing.htm

United States Geologic Survey. (2009). *Water Science for Schools*. Retrieved on May 13, 2009 from: http://ga.water.usgs.gov/edu/qahome.html

Village Safe Water Program. & State of Alaska Department of Environmental Conservation. (2014). *Chefornak Water and Wastewater Improvements*

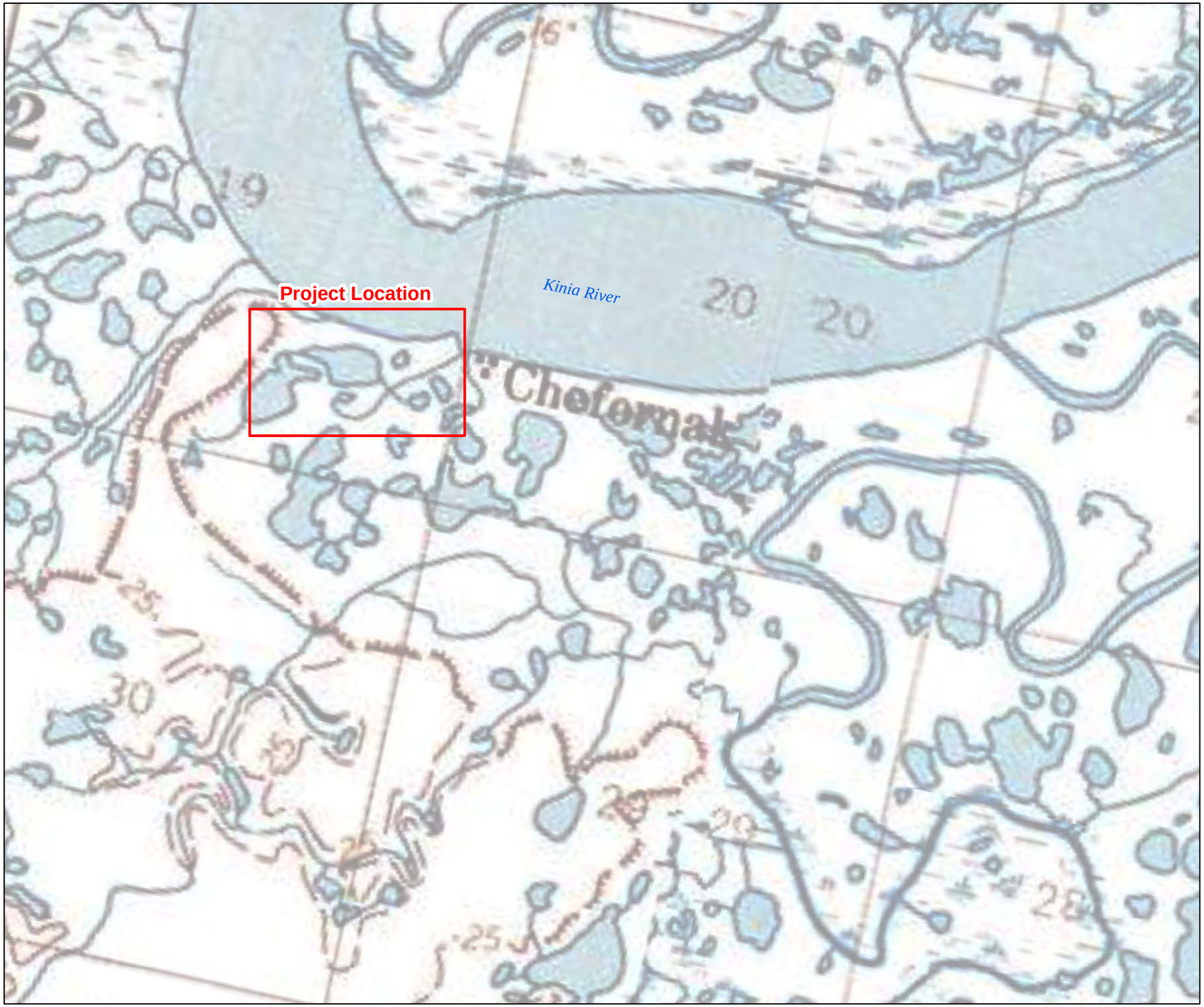

City of Chefornak Water and Waste Water Facility Upgrade Project

Figure 1

Site and Vicinity Map

2014

N
W
E
S

Miles
0 0.125 0.25 0.5

MSE Midnight Sun ENVIRONMENTAL, LLC
8123 Hartzell Road) Anchorage AK) 99507) 907-344-3244

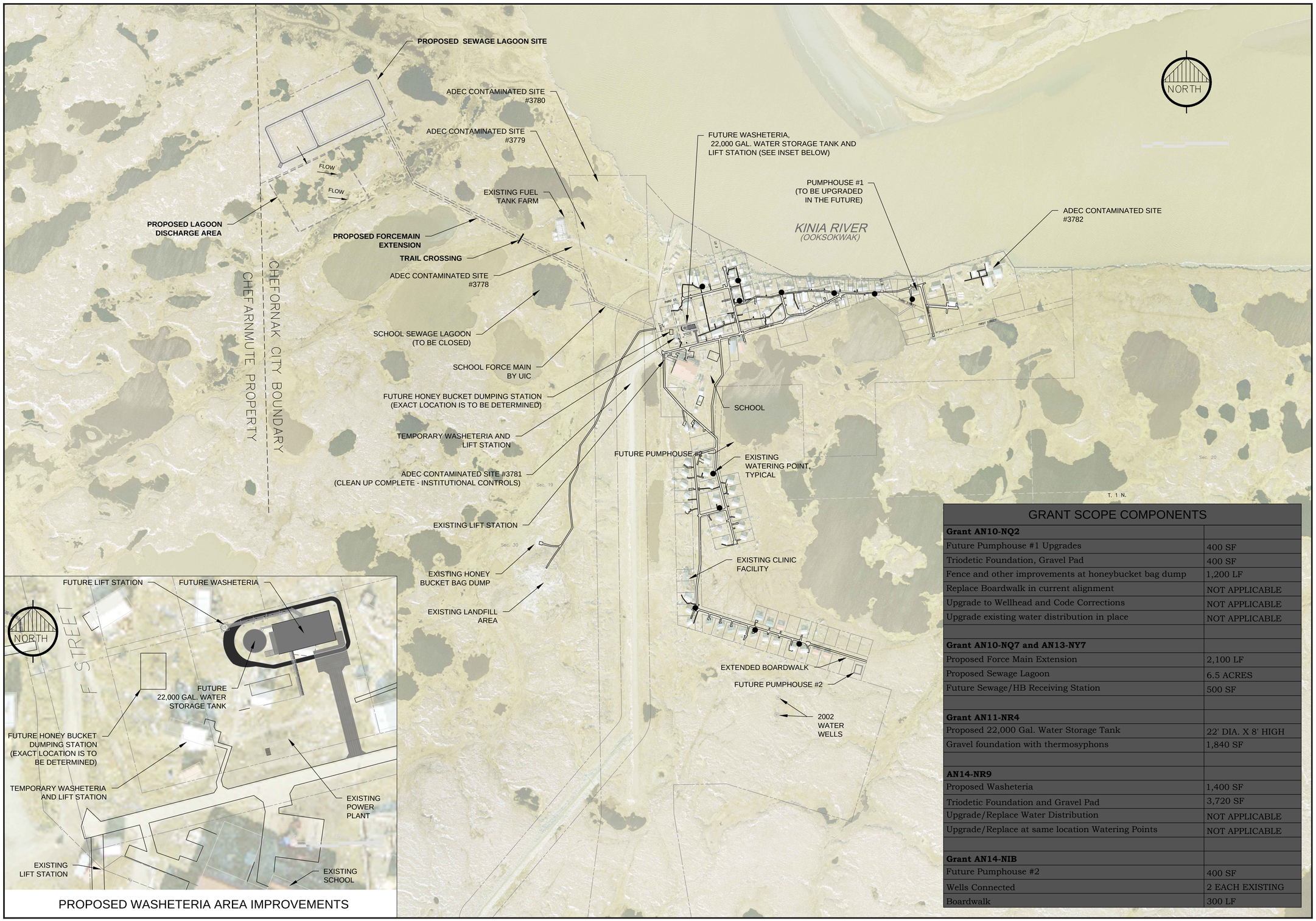

PROPOSED WASHETERIA AREA IMPROVEMENTS

GRANT SCOPE COMPONENTS	
Grant AN10-NQ2	
Future Pumphouse #1 Upgrades	400 SF
Triodetic Foundation, Gravel Pad	400 SF
Fence and other improvements at honeybucket bag dump	1,200 LF
Replace Boardwalk in current alignment	NOT APPLICABLE
Upgrade to Wellhead and Code Corrections	NOT APPLICABLE
Upgrade existing water distribution in place	NOT APPLICABLE
Grant AN10-NQ7 and AN13-NY7	
Proposed Force Main Extension	2,100 LF
Proposed Sewage Lagoon	6.5 ACRES
Future Sewage/HB Receiving Station	500 SF
Grant AN11-NR4	
Proposed 22,000 Gal. Water Storage Tank	22' DIA. X 8' HIGH
Gravel foundation with thermosyphons	1,840 SF
AN14-NR9	
Proposed Washeteria	1,400 SF
Triodetic Foundation and Gravel Pad	3,720 SF
Upgrade/Replace Water Distribution	NOT APPLICABLE
Upgrade/Replace at same location Watering Points	NOT APPLICABLE
Grant AN14-NIB	
Future Pumphouse #2	400 SF
Wells Connected	2 EACH EXISTING
Boardwalk	300 LF

Midnight Sun ENVIRONMENTAL, LLC
ENVIRONMENTAL | PROJECT MANAGEMENT | PROJECT DEVELOPMENT

CHEFORNAK SANITATION IMPROVEMENTS
CHEFORNAK, ALASKA
FIGURE 2

Scale: AS SHOWN
Date: MAR. 2014
Drawn: CM

CE2 ENGINEERS, INC.
PO BOX 230246 ANCHORAGE, AK 99523 PH: 907-563-9115 FAX: 907-563-9115

Appendix A
Consultation and Coordination Letters

Table of Contents

January 2014	Communication with CE2	Page 2
December 2013	Communication with USFWS	Pages 3-4
July 2011	Communication with USFWS	Pages 5-7
October 2011	Communication with SHPO	Page 8
December 2013	Communication with SHPO	Pages 9-10
December 2013	Communication with SHPO	Pages 11-12
June 2011	Communication with SHPO	Pages 13-14
February 2014	Communication with USACE	Pages 15-44
January 2014	Communication with CE2	Pages 45-47

Randlett, Susan A (DEC)

From: Mike Erdman <m.erdman@ce2engineers.com>
Sent: Thursday, January 30, 2014 2:19 PM
To: Randlett, Susan A (DEC)
Cc: Brian Aklin; Paul Weisner
Subject: CYF Lagoon

Susan,

I spoke with Gabriel Mahns of FAA, who provided additional clarification of FAA Advisory Circular 150/5200-33B. Since Chefornak Airport does not sell Jet-A fuel, the recommended minimum separation to a wastewater lagoon is 5,000 feet. Our separation is >8,000 feet.

I will send them a site plan and obtain an official determination.

Mike

Michael R. Erdman, P.E.
CE2 Engineers, Inc.
8221 Dimond Hook Drive
Anchorage, Alaska 99507
Ph: 907-349-1010
Fax 907-349-1015

FAA

Randlett, Susan A (DEC)

From: Lance, Ellen <ellen_lance@fws.gov>
Sent: Friday, December 13, 2013 8:21 AM
To: Randlett, Susan A (DEC)
Subject: Re: Chefornak Sewage Lagoon 2011-0147 - Request to evaluate effects of enlarged permit.

Susan, if ground disturbance is going to occur before nesting season initiates, you should be good to go.
Ellen
On Thursday, December 12, 2013, Randlett, Susan A (DEC) wrote:

Ellen,

I understand that Kimberly Klein is on leave through the end of January. The Village Safe Water project she addressed in her letter in 2011 did not begin construction, due to lack of funding. Now we hope to start in the next month or so, but found wastewater regulators requiring a larger footprint.

Can you guide me on the process to request the opinion of the Fish and Wildlife Service on how a larger footprint might affect the endangered species in the area? In the end, the water surface will be around 4 acres and the total footprint over 6 acres.

Susan Randlett

Village Safe Water Engineer I

Susan Randlett

Village Safe Water . Department of Environmental Conservation . 555 Cordova Street . Anchorage, AK 99501

1-907-269-7614 Phone

1-800-510-2332 ext. 7614 Toll Free

USFWS

From: Kimberly_Klein@fws.gov [mailto:Kimberly_Klein@fws.gov]
Sent: Wednesday, July 27, 2011 5:07 PM
To: Randlett, Susan A (DEC)
Cc: Strickland, Wade K (DEC); dbeveridge@anthc.org
Subject: Chefornak Sewage Lagoon 2011-0147

Please see the attached US Fish and Wildlife Service review of potential impacts of a sewage lagoon upgrade in Chefornak on species listed under the Endangered Species Act. Please reply or call with questions or if you need a hard copy of this letter. Thank you.

(See attached file: 2011-0147_Chefornak_Sewage Lagoon.pdf)

Kimberly Klein
Endangered Species Biologist
USFWS/AFWFO
605 W. 4th Ave. Room G-61
Anchorage, AK 99501
(907) 271-2066

--

Ellen W. Lance
Endangered Species Branch Chief
Anchorage Fish and Wildlife Field Office
605 West 4th Ave., Rm G61
Anchorage, Alaska 99501
(907) 271-1467
http://alaska.fws.gov/fisheries/fieldoffice/anchorage/endangered/program_overview.htm

United States Department of the Interior

FISH AND WILDLIFE SERVICE
Anchorage Fish & Wildlife Field Office
605 West 4th Avenue, Room G-61
Anchorage, Alaska 99501-2249

In reply refer to
AFWFO

July 27, 2011

EMAILED TO:

Susan Randlett
Village Safe Water Program
Department of Environmental Conservation
555 Cordova St. Anchorage, AK 99501

Re: Sewage Lagoon - Chefornak, Alaska (*Consultation number 2011-0147*)

Dear Ms. Randlett,

On June 29, 2011 we received a request for concurrence with your determination that a proposed sewage lagoon project in Chefornak, Alaska will have no affect on species listed under the Endangered Species Act of 1973 (16 U.S.C. 1531 et seq., as amended; ESA). The City of Chefornak's proposed lagoon project consists of a five-acre wastewater lagoon and 1,900 feet of twelve-inch overland pipe connecting the lagoon to the existing community infrastructure. The lagoon will help the community meet their long-term projected environmental health and safety needs; it will provide improved treatment via a primary and secondary treatment cell system rather than the existing single lagoon system consisting of an unimproved tundra pond. The Environmental Protection Agency is funding this project; funds will be granted through the Alaska Native Tribal Health Consortium (ANTHC).

Project Description: The facilities will be constructed approximately 2,000 feet west of the developed community of Chefornak. The lagoon will be excavated during winter when the ground is frozen. About 40,500 cubic yards of material will be removed and shaped into berms to form the sides of the lagoon. Construction will start in January 2012, and the facility will begin operating in 2012. The lagoon will be constructed of impermeable soils and will be maintained to prevent dike erosion. During construction, a storm water pollution prevention plan will be followed to reduce discharge of surface water containing high sediment loads caused by soil disturbance. After construction, the lagoon and pipe will be owned and maintained by the City of Chefornak. No new overhead powerlines, buildings, roads, or other new infrastructure will be installed.

Two times per year, controlled discharges of tested wastewater will be conducted. The discharges will be conducted in compliance with an Alaska Department of Environmental Conservation *Alaska Pollutant Discharge Elimination System* General Permit for Seasonal Discharges from Sewage Lagoons. Treated wastewater will be discharged to nearby wetlands. Wastewater will not be discharged to nearby rivers or streams. Discharges will be monitored to verify that applicable water quality standards are met.

Listed Species:
The following species are found in the project vicinity:

Steller's eider: North American breeding Steller's eiders (*Polysticta stelleri*), listed as threatened under the ESA, are diving ducks that spend most of their time in shallow near-shore marine waters. An area of marine habitat near Chefornak has been designated as critical habitat for Steller's eiders. This area is used seasonally in spring (Larned 2007; Larned and Bollinger 2009) and between July 15 and October 1. It is known as the Kuskokwim Shoals Unit. Molting and wintering flocks congregate on exposed shoals, in protected lagoons and bays, and along rocky headlands and islets. Some individuals may remain in this area over winter, but most birds will disperse to wintering grounds on the Alaska Peninsula by late October.

Spectacled eider: Spectacled eiders (*Somateria fischeri*), listed as threatened under the ESA, may occur in the project vicinity during the nesting season. Their nesting habitat occurs along the Yukon-Kuskokwim coast within three miles of the shoreline. Spectacled eiders nest in western Alaska from April 15 to July 15. Around spring break-up, spectacled eiders select nesting areas on wet coastal tundra near shallow ponds or lakes. Soon after eggs are laid males leave the nesting grounds. Breeding females and their young may remain on the nesting grounds until early September.

Impact Avoidance Measures:
Winter construction will reduce the potential effect on eiders, as they are rarely overwinter here. You have indicated that if possible, all project components will be conducted prior to May 5 or after July 25 of each year, and if any construction must occur within this time period, the crew will be trained to recognize the spectacled eider and its nest. Work will stop until after July 15 if any eider nest is observed. Work may continue between April 15 and July 15 in areas where all standing vegetation has been removed or the ground has been disturbed prior to April 15, as spectacled eiders are unlikely to select nest sites in previously-denuded areas.

Conclusion:
Given these considerations, and the low likelihood that discharges of treated wastewater to wetlands will contaminate downstream marine habitat, we concur with your determination that the project may affect but is not likely to adversely affect Steller's and spectacled eiders. In view of this, requirements of section 7 of the Endangered Species Act of 1973 (16 U.S.C. 1531 et seq., as amended, ESA) have been satisfied. However, obligations under section 7 of the ESA must be reconsidered if new information reveals project impacts that may affect listed species or critical habitat in a manner not previously considered, if this action is subsequently modified in a manner which was not considered in this assessment, or if a new species is listed or critical habitat is determined that may be affected by the proposed action. If the proposed project changes, please contact us again to verify there is no effect on listed species or critical habitat.

This letter relates only to federally listed or proposed species, and/or designated or proposed critical habitat, under our jurisdiction. This letter does not address species under the jurisdiction of the National Marine Fisheries Service, or other legislation or responsibilities under the Fish and Wildlife Coordination Act, Clean Water Act, National Environmental Policy Act, Marine Mammal Protection Act, Migratory Bird Treaty Act, or Bald and Golden Eagle Protection Act.

Susan Randlett

Thank you for your cooperation in meeting our joint responsibilities under the ESA. If you have any questions, please contact me at (907) 271-2066 and refer to consultation number 2011-0147.

Sincerely,

Kimberly Klein
Endangered Species Biologist

cc: Wade Strickland, ADEC
Dave G. Beveridge, ANTHC

Larned WW. 2008. Steller's Eider Spring Migration Surveys Southwest Alaska 2007. U.S. Fish and Wildlife Service, Waterfowl Management, 43655 K Beach Rd., Soldotna, Alaska 99669.

Larned WW, Karen S. Bollinger. 2009. Steller's Eider Spring Migration Surveys Southwest Alaska 2009. Unpublished. U.S. Fish and Wildlife Service, Waterfowl Management. 23 pp.

T 10.14.2011 3130 DEC

Village Safe Water
OCT 19 2011
RECEIVED

RECEIVED
OCT 12 2011
OHA

STATE OF ALASKA

DEPT. OF ENVIRONMENTAL CONSERVATION
DIVISION OF WATER
VILLAGE SAFE WATER

SEAN PARNELL, GOVERNOR
555 Cordova Street
Anchorage, Alaska 99501-2617
PHONE: (907) 269-7614
FAX: (907) 269-7509

October 10, 2011

Ms. Shina duVall, RPA
Archaeologist, Review and Compliance Coordinator
Alaska State Historic Preservation Office
Office of History and Archaeology
550 W. 7th Ave., Suite 1310

RE: Chefornak Wastewater Lagoon and Force Main Improvements

Dear Ms. duVall:

The City of Chefornak is proposing to construct a new 300 ft by 700 foot wastewater lagoon, and a 2,000 foot aboveground sewer force main (see enclosed figure).

The project funding is managed by the State of Alaska Village Safe Water.

The enclosed cultural resources review on August 30, 2011 by Brian Davis, describes the area's low probability for cultural resources. The purpose of this letter is to inform you of the scope of this project and to request your concurrence on our finding that no historic properties will be affected by the project.

The project construction will occur during the periods when the ground is frozen over the next three years, beginning this winter and ending in the spring of 2013.

Please contact me at 269-7614 with any inquiries or comments.

Respectfully,

Susan Randlett, P.E.
VSW Project Engineer

Encl: Chefornak Cultural Resources Review
Site Plan

cc: City of Chefornak
CE2 Engineers, Inc.

No Historic Properties Affect
Alaska State Historic Preservation Of
Date. 10.14.2011
File No. 3130-2R DEC

9476

Randlett, Susan A (DEC)

From: Duvall, Shina A (DNR)
Sent: Tuesday, December 17, 2013 12:57 PM
To: Randlett, Susan A (DEC)
Cc: Fetter, Adele J (DEC); m.erdman@ce2engineers.com
Subject: RE: Request for Review of 2011 SHPO Finding that No Historic Properties Affected

Hi Susan,

I believe that our original concurrence still applies to the undertaking despite the change. I don't believe we would have any additional concerns about the revised footprint. However, you are correct that the other project components should be reviewed by our office once they are fully developed.

Please let me know if you have any questions or if we may be of further assistance.

Best regards,
Shina

Shina duVall, RPA
Archaeologist, Review and Compliance Coordinator
Alaska State Historic Preservation Office / Office of History and Archaeology
550 W. 7th Ave., Suite 1310
907-269-8720 (phone) 907-269-8908 (fax)
shina.duvall@alaska.gov

From: Randlett, Susan A (DEC)
Sent: Friday, December 13, 2013 3:13 PM
To: Duvall, Shina A (DNR)
Cc: Fetter, Adele J (DEC); m.erdman@ce2engineers.com
Subject: Request for Review of 2011 SHPO Finding that No Historic Properties Affected

Shina,
Here is the revised footprint for federal grants AN10NQ7 and AN13NY7. To meet a construction schedule, I would like to know whether your letter of 2011 remains in force given the larger area of disturbance.

- Sewage lagoon and
- Force main above ground pipework

My recollection is that Steve Street at AVCP looked at the lagoon request in 2011. As I understand it, the low likelihood of cultural significant artifacts links back to the ground being too marshy to reach or live on for several months out of the year.

I am assuming that since the following project components are not fully developed, the following items will need a future request for review. They are described in a planning document if you would like to see the conceptual arrangement for the undersigned items.

- A building to receive honeybucket waste will be designed and installed on a developed lot in the town site. (AN10-NQ2)

- Modifications inside the existing 1983 water treatment plant (AN10-NQ2)
- Putting two existing wells in service (AN10-NQ2)
- Installing two small pump houses adjacent to the existing water distribution loop (AN10-NQ2).
- Installing a fence around a honeybucket dump site (AN10-NQ2)
- Upgrading boardwalk in the same alignment (AN10-NQ2)

Please feel free to call. I can include the design engineer on a teleconference if helpful.

Susan

Susan Randlett
Village Safe Water . Department of Environmental Conservation . 555 Cordova Street . Anchorage, AK 99501
1-907-269-7614 Phone
1-800-510-2332 ext. 7614 Toll Free

From: Mike Erdman [mailto:m.erdman@ce2engineers.com]
Sent: Friday, December 13, 2013 2:35 PM
To: Randlett, Susan A (DEC)
Cc: Paul Weisner
Subject: CYF Lagoon

Susan,

Revised lagoon configuration attached. I added approximate "toe to toe" dimensions .

Mike

Randlett, Susan A (DEC)

From: Randlett, Susan A (DEC)
Sent: Tuesday, December 17, 2013 2:15 PM
To: Duvall, Shina A (DNR)
Subject: RE: Request for Review of 2011 SHPO Finding that No Historic Properties Affected

Thank you, Shina.

If I hear any concerns from the funder I will be back in touch.

Susan

From: Duvall, Shina A (DNR)
Sent: Tuesday, December 17, 2013 12:57 PM
To: Randlett, Susan A (DEC)
Cc: Fetter, Adele J (DEC); m.erdman@ce2engineers.com
Subject: RE: Request for Review of 2011 SHPO Finding that No Historic Properties Affected

Hi Susan,

I believe that our original concurrence still applies to the undertaking despite the change. I don't believe we would have any additional concerns about the revised footprint. However, you are correct that the other project components should be reviewed by our office once they are fully developed.

Please let me know if you have any questions or if we may be of further assistance.

Best regards,
Shina

Shina duVall, RPA
Archaeologist, Review and Compliance Coordinator
Alaska State Historic Preservation Office / Office of History and Archaeology
550 W. 7th Ave., Suite 1310
907-269-8720 (phone) 907-269-8908 (fax)
shina.duvall@alaska.gov

From: Randlett, Susan A (DEC)
Sent: Friday, December 13, 2013 3:13 PM
To: Duvall, Shina A (DNR)
Cc: Fetter, Adele J (DEC); m.erdman@ce2engineers.com
Subject: Request for Review of 2011 SHPO Finding that No Historic Properties Affected

Shina,
Here is the revised footprint for federal grants AN10NQ7 and AN13NY7. To meet a construction schedule, I would like to know whether your letter of 2011 remains in force given the larger area of disturbance.

- Sewage lagoon and

- Force main above ground pipework

My recollection is that Steve Street at AVCP looked at the lagoon request in 2011. As I understand it, the low likelihood of cultural significant artifacts links back to the ground being too marshy to reach or live on for several months out of the year.

I am assuming that since the following project components are not fully developed, the following items will need a future request for review. They are described in a planning document if you would like to see the conceptual arrangement for the undersigned items.

- A building to receive honeybucket waste will be designed and installed on a developed lot in the town site. (AN10-NQ2)
- Modifications inside the existing 1983 water treatment plant (AN10-NQ2)
- Putting two existing wells in service (AN10-NQ2)
- Installing two small pump houses adjacent to the existing water distribution loop (AN10-NQ2).
- Installing a fence around a honeybucket dump site (AN10-NQ2)
- Upgrading boardwalk in the same alignment (AN10-NQ2)

Please feel free to call. I can include the design engineer on a teleconference if helpful.

Susan

Susan Randlett
Village Safe Water . Department of Environmental Conservation . 555 Cordova Street . Anchorage, AK 99501
1-907-269-7614 Phone
1-800-510-2332 ext. 7614 Toll Free

From: Mike Erdman [mailto:m.erdman@ce2engineers.com]
Sent: Friday, December 13, 2013 2:35 PM
To: Randlett, Susan A (DEC)
Cc: Paul Weisner
Subject: CYF Lagoon

Susan,

Revised lagoon configuration attached. I added approximate "toe to toe" dimensions .

Mike

STATE OF ALASKA

DEPT. OF ENVIRONMENTAL CONSERVATION
DIVISION OF WATER
VILLAGE SAFE WATER

SEAN PARNELL, GOVERNOR
555 Cordova Street
Anchorage, Alaska 99501-2617
PHONE: (907) 269-7614
FAX: (907) 269-7509

June 21, 2011

Ms. Judith E. Bittner
State Historic Preservation Officer
Alaska Department of Natural Resources
550 West 7th Avenue, Suite 1310
Anchorage, Alaska 99501-3565

RE: Request for Concurrence - Chefornak Lagoon and Force Main

Dear Ms. Bittner:

The purpose of this letter is to request your concurrence on my finding that the Chefornak Lagoon and Force Main project will have no impact on historical or cultural resources in Chefornak. I spoke with Ms. Shina Duvall about this project this morning.

People settled in this area in the 1950's, when Old Chefornak resettled. CE2 Engineers, Inc. reviewed the Alaska Heritage Resources Survey and found no sites in project area or the surrounding area.

Project Description:

The Chefornak Lagoon and Force Main project, as shown in Attachment 1, has two components:

- A five acre wastewater lagoon with discharge of treated effluent to land, and
- A 1,900 foot, overland pipe with an outer diameter of 12", connecting the lagoon to an existing school pipe.

Project Location:

The project is in a marshy wetland area about 2,000 feet from the residential area of Chefornak.

Chefornak itself is at junction of the Kinia and Keguk Rivers, in the Yukon-Kuskokwim Delta. The community lies at approximately 60.160000 North Latitude and 164.265830 West Longitude. (Section 19, Town 001 North, Range 086 West, Seward Meridian.)

Project Funding

EPA is funding the project through the Clean Water Act – Indian Set Aside program. The reference number is Cooperative Project Agreement AN 10-NQ7.

Project Timeline:

If logistics allow, this project will be constructed between January 2012 and October 2012, with some finish work from October 2012 until May 2013.

Thank you for your assistance with this project. Please don't hesitate to contact me for supporting information.

Sincerely,

Susan Randlett
Village Safe Water Engineer

Encl: Location Map
Conceptual Project Map

CC: City of Chefornak
CE2 Engineers, Inc.

Randlett, Susan A (DEC)

From: Berkner, Jason R POA <Jason.R.Berkner@usace.army.mil>
Sent: Monday, February 03, 2014 3:44 PM
To: Randlett, Susan A (DEC)
Subject: RE: Chefornak - Submittal Complete (UNCLASSIFIED)
Attachments: Mod_PN.docx

Classification: UNCLASSIFIED
Caveats: NONE

Hi Susan,

We have all the necessary information to process the modification of the Section 404 Clean Water Act authorization. Last week the attached 15-day coordination letter was submitted for release, so you should be seeing it shortly if you have not already. Our permit decision would follow within 2-weeks of the expiration of the coordination letter. This would be considered a very minor modification and no hold-ups or complications are anticipated.

Thanks,

Jason Berkner
Project Manager
Regulatory Division
U.S. Army Corps of Engineers
PO Box 6898, 2204 3rd St.
JBER, Alaska 99506

phone: (907)-753-5778

-----Original Message-----
From: Randlett, Susan A (DEC) [mailto:susan.randlett@alaska.gov]
Sent: Sunday, February 02, 2014 8:48 PM
To: Berkner, Jason R POA
Subject: [EXTERNAL] Chefornak - Submittal Complete

Jason,
I am hoping to compile all the agency consults for a NEPA environmental assessment Monday.

Would you please respond with a statement I can include in the appendix, to indicate the necessary submittals for the lagoon and force main have been made to the Corps?

Thank you for your help to me, and to the community of Chefornak.

Susan Randlett
Village Safe Water Engineer
907-269-7614 (phone)

US Corps

Classification: UNCLASSIFIED
Caveats: NONE

FILE TOOLS VIEW Mod_PN.docx (Protected View) - Word
PROTECTED VIEW Be careful—email attachments can contain viruses. Unless you need to edit, it's safer to stay in Protected View. Enable Editing
Navigati...
Search docume
HEADINGS PAGE
Create an interactive outline of your document.
It's a great way to keep track of where you are or quickly move your content around.
To get started, go to the Home tab and apply Heading styles to the headings in your document.

DEPARTMENT OF THE ARMY
ALASKA DISTRICT, U.S. ARMY CORPS OF ENGINEERS
REGULATORY DIVISION
P.O. BOX 6898
JBER, ALASKA 99506-0898

Regulatory Division
POA-2011-640-M1, Kinia River

Dear Reviewer:

We are requesting your comments within 15 days from the date of this letter regarding the proposed modification of Department of the Army permit number POA-2011-640, which was issued on November 7, 2012, to the City of Chefornak for the construction of a three-cell sewage lagoon and a 2,100-foot-long elevated force main. Of the eight acres of wetland impact authorized under this permit, 6.75 acres of wetland loss are presently attributed to the construction of the lagoon in accordance with plans dated May 16, 2012. This is the 1st modification of the original permit. The project site is located within Section 19, T. 1 N., R. 86 W., Seward Meridian; USGS Quad Map Baird Inlet A-7; Latitude 60.1625° N., Longitude 164.2961° W.; Chefornak, Alaska.

The permittee requests the permit be modified to change the size and configuration of the sewage lagoon in order to more closely conform to Alaska Department of Environmental Conservation (DEC) design specifications. The proposed modification would slightly alter the location of the lagoon, and reduce the size of its footprint by 0.19-acre. The modified lagoon footprint (wetland loss) would measure approximately 6.56 acres. Details on the proposed modification are shown on the enclosed plan (figure 1 of 1), dated December 2013.

Based upon our review of the original authorization, and the proposed project changes, the Corps finds this proposal is substantially similar to the original permit authorization. Therefore, we have determined the proposed modification does not warrant a public notice.

PAGE 1 OF 2 100%
2:42 PM 2/4/2014

FILE TOOLS VIEW Mod_PN.docx (Protected View) - Word
PROTECTED VIEW Be careful—email attachments can contain viruses. Unless you need to edit, it's safer to stay in Protected View. Enable Editing
Navigati...
Search docume
HEADINGS PAGE
Create an interactive outline of your document.
It's a great way to keep track of where you are or quickly move your content around.
To get started, go to the Home tab and apply Heading styles to the headings in your document.

Based upon our review of the original authorization, and the proposed project changes, the Corps finds this proposal is substantially similar to the original permit authorization. Therefore, we have determined the proposed modification does not warrant a public notice.

If you have questions, please contact me via email at Jason.R.Berkner@usace.army.mil, by mail at the address above, or by phone at (907) 755-5778, or toll free from within Alaska at (800) 478-2712.

Sincerely,

Jason Berkner
Project Manager

CONCUR
CEPOA-RD
Holley
Berkner/TYPIST/3-2712
27-JAN-2014/(1145)
JRB/MOD-PN

Enclosure

BCF:

North Branch

ADEC	james.rypkema@alaska.gov
ADF&G-DH, Fairbanks	william.morris@alaska.gov
ADNR-DMLW, Anchorage	dnr.scro.dcom.cor@alaska.gov
ADNR-DMLW, Fairbanks (north of AK Range)	jeanne.proulx@alaska.gov

PAGE 1 OF 2 100%
2:43 PM 2/4/2014

APPLICATION FOR DEPARTMENT OF THE ARMY PERMIT *(33 CFR 325)*	OMB APPROVAL NO. 0710-0003 EXPIRES: 31 August 2012

Public reporting burden for this collection of information is estimated to average 11 hours per response, including the time for reviewing instructions, searching existing data sources, gathering and maintaining the data needed, and completing and reviewing the collection of information. Send comments regarding this burden estimate or any other aspect of this collection of information, including suggestions for reducing this burden, to Department of Defense, Washington Headquarters, Executive Services and Communications Directorate, Information Management Division and to the Office of Management and Budget, Paperwork Reduction Project (0710-0003). Respondents should be aware that notwithstanding any other provision of law, no person shall be subject to any penalty for failing to comply with a collection of information if it does not display a currently valid OMB control number. Please DO NOT RETURN your form to either of those addresses. Completed applications must be submitted to the District Engineer having jurisdiction over the location of the proposed activity.

PRIVACY ACT STATEMENT

Authorities: Rivers and Harbors Act, Section 10, 33 USC 403; Clean Water Act, Section 404, 33 USC 1344; Marine Protection, Research, and Sanctuaries Act, Section 103, 33 USC 1413; Regulatory Programs of the Corps of Engineers; Final Rule 33 CFR 320-332. Principal Purpose: Information provided on this form will be used in evaluating the application for a permit. Routine Uses: This Information may be shared with the Department of Justice and other federal, state, and local government agencies, and the public and may be made available as part of a public notice as required by Federal law. Submission of requested information is voluntary, however, if information is not provided the permit application cannot be evaluated nor can a permit be issued. One set of original drawings or good reproducible copies which show the location and character of the proposed activity must be attached to this application (see sample drawings and instructions) and be submitted to the District Engineer having jurisdiction over the location of the proposed activity. An application that is not completed in full will be returned.

(ITEMS 1 THRU 4 TO BE FILLED BY THE CORPS)

1. APPLICATION NO.	2. FIELD OFFICE CODE	3. DATE RECEIVED	4. DATE APPLICATION COMPLETE

(ITEMS BELOW TO BE FILLED BY APPLICANT)

5. APPLICANT'S NAME:
First - Bernard Middle - Last – Mael
Company – City of Chefornak
E-mail Address – citychefornak@yahoo.com

8. AUTHORIZED AGENT'S NAME AND TITLE (an agent is not required)
First - Susan Middle - Last – Randlett
Company – Alaska DEC - Village Safe Water
E-mail Address – susan.randlett@alaska.gov

6. APPLICANT'S ADDRESS.
Address - PO Box 29
City – Chefornak State – AK Zip – 99561 Country – USA

9. AGENT'S ADDRESS
Address - 555 Cordova Street
City – Anchorag State – AK Zip – 99501 Country – USA

7. APPLICANT'S PHONE NOs. W/AREA CODE
a. Residence b. Business 867-8528 c. Fax 867-8704

10. AGENT'S PHONE NOs. W/AREA CODE
a. Residence b. Business 269-7614 c. Fax 269-7509

STATEMENT OF AUTHORIZATION

11. I hereby authorize, Susan Randlett to act in my behalf as my agent in the processing of this application and to furnish, upon request, supplemental information in support of this permit application.

APPLICANT'S SIGNATURE DATE

NAME, LOCATION, AND DESCRIPTION OF PROJECT OR ACTIVITY

12. PROJECT NAME OR TITLE (see instructions)
Chefornak Wastewater Lagoon

13. NAME OF WATERBODY, IF KNOWN (if applicable)
Kinia River

14. PROJECT STREET ADDRESS (if applicable)
Address N/A
City - State – Zip -

15. LOCATION OF PROJECT
Latitude: °N 60 09' 34"
Longitude: °W 164 15' 58"

16. OTHER LOCATION DESCRIPTIONS, IF KNOWN (see instructions)
State Tax Parcel ID Municipality
Section – 19 Township – 001N Range – 086W Seward Meridian

17. DIRECTIONS TO THE SITE
Approximately 1900 feet from the developed community of Chefornak (USS 4421); no road access at this time.

18. Nature of Activity (Description of project, include all features)

Proposed construction of a 400 ' by 735' three cell facultative sewage lagoon and a 1900' force main from the existing community to the lagoon. The material source is the onsite soil. Winter construction from January 2010 to April 2013.

19. Project Purpose (Describe the reason or purpose of the project, see instructions)

To provide the community of Chefornak with a modern sewage disposal facility.

USE BLOCKS 20-23 IF DREDGED AND/OR FILL MATERIAL IS TO BE DISCHARGED

20. Reason(s) for Discharge

To build the lagoon dikes and provide support for the force main.

21. Type(s) of Material Being Discharged and the Amount of Each Type in Cubic Yards:

Type Amount in Cubic Yards	Type Amount in Cubic Yards	Type Amount in Cubic Yards
Local silt, 40,500 CY		

22. Surface Area in Acres of Wetlands or Other Waters Filled (see instructions)

Acres 8.0 acres: Lagoon - 346,500 square feet, Forcemain - 25 x 1900 sf of disturbed area

Or

Liner Feet finished forcemain 8 ft wide by 1900 linear feet

23. Description of Avoidance, Minimization, and Compensation (see instructions)

There is no alternative to locating the project in wetlands; impact will be avoided as possible, SWPPP will be implemented to minimize impacts; project budget does not include compensatory mitigation.

24. Is Any Portion of the Work Already Complete? Yes ☐ No ☑ IF YES, DESCRIBE THE COMPLETED WORK

25. Addresses of Adjoining Property Owners, Lessees, Etc., Whose Property Adjoins the Waterbody (If more than can be entered here, please attach a supplemental list).

Address – Chefarnrmute, Inc. PO Box 70

City – Chefornak State – AK Zip – 99561

26. List of Other Certifications or Approvals/Denials Received from other Federal, State, or Local Agencies for Work Described in This Application.

AGENCY	TYPE APPROVAL*	IDENTIFICATION NUMBER	DATE APPLIED	DATE APPROVED	DATE DENIED
SHPO	Concurrence		June 21, 2011		
USF&WS	Concurrence		June 28, 2011		

* Would include but is not restricted to zoning, building, and flood plain permits

27. Application is hereby made for a permit or permits to authorize the work described in this application. I certify that the information in this application is complete and accurate. I further certify that I possess the authority to undertake the work described herein or am acting as the duly authorized agent of the applicant.

SIGNATURE OF APPLICANT DATE SIGNATURE OF AGENT DATE

The application must be signed by the person who desires to undertake the proposed activity (applicant) or it may be signed by a duly authorized agent if the statement in block 11 has been filled out and signed.

18 U.S.C. Section 1001 provides that: Whoever, in any manner within the jurisdiction of any department or agency of the United States knowingly and willfully falsifies, conceals, or covers up any trick, scheme, or disguises a material fact or makes any false, fictitious or fraudulent statements or representations or makes or uses any false writing or document knowing same to contain any false, fictitious or fraudulent statements or entry, shall be fined not more than $10,000 or imprisoned not more than five years or both.

State of Alaska, Department of Natural Resources, Division of Coastal & Ocean Management

Coastal Project Questionnaire and Certification Statement

The Coastal Project Questionnaire (CPQ) is a diagnostic tool that will identify the state and federal permit requirements for your project that are subject to a consistency review. You must answer all questions. If you answer "Yes" to any of the questions, please call that specific department for further instructions to avoid delay in processing your application. You can find an agency contact list online at http://alaskacoast.state.ak.us/Contacts/PRCregcont.html.

A complete project packet includes accurate maps and plan drawings at scales large enough to show details, copies of your state and federal permit applications, your answers to this questionnaire, and a complete consistency evaluation. DCOM will notify you within 21 days of receipt if the packet is incomplete and what information is still required.

For additional information or assistance, you may call or email the Juneau Project Review at (907) 465-2142, or the Anchorage Project Review at (907) 269-7478. This CPQ document contains numerous hyperlinks (underlined text that has a connection to an internet web page) and is best viewed on-line. Additional instructions are available at http://www.alaskacoast.state.ak.us/Projects/pcpq.html

■ APPLICANT INFORMATION

1. City of Chefornak
Name of Applicant
PO Box 29
Address
Chefornak AK 99561
City/State/Zip
907-867-8528
Daytime Phone
907-867-8704 citychefornak@yahoo.com
Fax Number E-mail Address

2. Susan Randlett, Village Safe Water Program
Agent (or responsible party if other than applicant)
555 Cordova Street
Address
Anchorage, AK 99501
City/State/Zip
907-269-7614
Daytime Phone
907-269-7509 susan.randlett@alaska.gov
Fax Number E-mail Address

■ PROJECT INFORMATION

	Yes	No
1. This activity is a: ☒ new project ☐ modification or addition to an existing project		
2. If this is a modification or an addition, do you currently have any State, federal or local approvals for this activity? *NOTE: Approval means any form of authorization.* If "yes," please list below:	☐	☐

Approval Type	Approval #	Issuance Date	Expiration Date

3. If this is a modification, was this original project reviewed for consistency with the Alaska Coastal Management Program?	☐	☐

Previous ACMP I.D. Number: _____ (example: AK 0706-05AA or ID2004-0505JJ)
Previous Project Name: _____ Previous Project Applicant: _____

■ PROJECT DESCRIPTION

Attach a complete and detailed narrative description of your new project or of your modification/addition including ALL associated facilities and changes to the current land or water use (if not already attached as part of an agency application). Clearly delineate the project boundaries and all property owners, including owners of adjacent land, on the site plan. The

scale of the maps and plan drawings must be large enough to show pertinent details. Identify your proposed footprint or disturbed area. If this project is a modification to an approved project, identify existing facilities and proposed changes on the site plan.

Proposed starting date for project: _____ Proposed ending date for project:_____

■ PROJECT LOCATION and LAND OWNERSHIP

Yes No

4. Describe/identify the project location on a map (Including nearest community, the name of the nearest land feature or body of water, and other legal description such as a survey or lot number.).
   Township 01N Range 86W Section 19 Meridian Seward
   Latitude/Longitude _____ / _____ (specify Decimal Degrees or Degrees, Minutes, Seconds)
   USGS Quad Map _____
5. The project is located on: ☐ State land or water* ☐ Federal land ☐ Private land ☒ Municipal land
   (Check all that apply) ☐ Mental Health Trust land ☐ University of Alaska land
   Contact the applicable landowner(s) to obtain necessary authorization. State land ownership can be verified using Alaska Mapper. ****State land can be uplands, tidelands or submerged lands to 3 miles offshore.***
6. Is the project within or associated with the Trans Alaska Pipeline corridor? ..... ☐ ☒

■ COASTAL DISTRICT

Yes No

7. Is the project located in a coastal district? ..... ☒ ☐
   If yes, identify the applicable coastal district(s) Ceñaliulriit CRSA and contact them to ensure your project conforms with district policies and zoning requirements. *Coastal districts are a municipality or borough, home rule or first class city, second class municipality with planning powers, or coastal resource service area. A coastal district is a participant in the State's consistency review process. Early interaction with the district can benefit you significantly; please contact the district representative listed on the contact list at* ***http://www.alaskacoast.state.ak.us/Contacts/PRCregcont.html***

■ DEPARTMENT OF NATURAL RESOURCES (DNR) APPROVALS

DNR DIVISION OF MINING, LAND & WATER- LAND SECTION

Yes No

1. Is the proposed project on State-owned land or water or will you need to cross State-owned land for access? *(NOTE: State land includes the land below the ordinary high water line of navigable streams, rivers and lakes, and in marine waters, below the mean high tide line seaward for three miles. State land does not include Alaska Mental Health Trust Land or University of Alaska Land.)* ..... ☐ ☒
2. If you answered yes to the question above, indicate the person you contacted at the appropriate Division of Mining, Land and Water regional office for information.
   a) Name/date of Contact: _____
   b) Is an application required for the proposed activity? ..... ☐ ☐
   c) If "YES" then submit a signed copy of the completed application to the DCOM. If "No", explain why an application isn't required. Explanation: _____

DNR DIVISION OF MINING, LAND & WATER- MATERIALS SECTION

Yes No

3. Do you plan to dredge or otherwise excavate or remove materials such as rock, sand, gravel, peat, or overburden from any land regardless of ownership? ..... ☒ ☐
   a) Location of excavation site if different than the project site: _____
   Township _____ Range _____ Section _____ Meridian _____
4. At any one site (regardless of land ownership), do you plan any of the following? ..... ☒ ☐
   ☒ Excavate five or more acres over a year's time
   ☐ Excavate 50,000 cubic yards or more of materials (rock, sand, gravel, soil, peat, overburden, etc.) over a year's time
   ☐ Have a cumulative, un-reclaimed, excavated area of five or more acres
5. Do you plan to place fill or excavated material on State-owned land? ..... ☐ ☒
   a) Location of fill or material disposal site if different than the project site: _____
   Township _____ Range _____ Section _____ Meridian _____

6. If you answered yes to any question above, indicate the person you contacted at the appropriate Division of Mining, Land and Water regional office for information.
   a) Name/date of Contact: _____
   b) Is an application required for the proposed activity? ..... ☐ ☐
   c) If "YES" then submit a signed copy of the completed application to the DCOM. If "No", explain why an application isn't required. Explanation: _____

DNR DIVISION OF MINING, LAND & WATER- MINING SECTION

	Yes	No
7. Do you plan to mine for locatable minerals such as silver, gold, or copper?	☐	☒
8. Do you plan to explore for or extract coal?	☐	☒
9. If you answered yes to any question above, indicate the person you contacted at the appropriate Division of Mining, Land and Water regional office for information.		
a) Name/date of Contact: _____		
b) Is an application required for the proposed activity?	☐	☐
c) If "YES" then submit a signed copy of the completed application to the DCOM. If "No", explain why an application isn't required. Explanation: _____		

DNR DIVISION OF MINING, LAND & WATER- WATER SECTION

	Yes	No
10. Will this project or development divert, impound, withdraw, or use any fresh water (regardless of land ownership)? *(NOTE: If you know of other water users who withdraw from the same source or any potential conflicts affecting this use of water, contact the Water Section. If you are obtaining water exclusively from either an existing Public Water Supply or from a rainwater catchment system, you are not required to contact the DNR Water Section regional office.)*	☐	☒
a) Check all points-of-withdrawal or water sources that apply:		
☐ Public Water system (name):_____		
☐ Stream or Lake (name): _____		
☐ Well		
☐ Rain catchment system		
☐ Other: _____		
b) Intended use(s) of water: _____		
c) Amount (maximum daily, not average, in gallons per day): _____		
d) Is the point of water withdrawal on property you own?	☐	☐
11. Do you plan to build or alter a dam (regardless of land ownership)?	☐	☒
12. If you answered yes to any question above, indicate the person you contacted at the appropriate Division of Mining, Land and Water regional office for information.		
a) Name/date of Contact: _____		
b) Is an application required for the proposed activity?	☐	☐
c) If "YES" then submit a signed copy of the completed application to the DCOM. If "No", explain why an application isn't required. Explanation: _____		

DNR DIVISION OF FORESTRY

	Yes	No
13. Does your operation meet **both** of the following criteria on any land, regardless of ownership?		
a) The project will commercially harvest timber on 10 or more acres, or commercially harvest timber that intersects, encompasses, or borders on surface waters, **and**		
b) The project involves one or more of the following: site preparation, thinning, slash treatment, construction and maintenance of roads associated with a commercial timber harvest, or any other activity leading to or connected to a commercial timber harvest operation	☐	☒
14. If you answered yes to any question above, indicate the person you contacted at the appropriate Division of Forestry regional office for information.		
a) Name/date of Contact: _____		
b) Is an application required for the proposed activity?	☐	☐
c) If "YES" then submit a signed copy of the completed application to the DCOM. If "No", explain why an application isn't required. Explanation: _____		

DNR DIVISION OF OIL & GAS

	Yes	No
15. a) Will you be exploring for or producing oil and/or gas?	☐	☒
b) Will you conduct surface use activities on/within an oil and gas lease or unit? If yes, please specify: _____	☐	☒
16. Do you plan to drill a geothermal well (regardless of land ownership)?	☐	☐
17. If you answered yes to any question above, indicate the person you contacted at the appropriate Division of Oil & Gas office for information. a) Name/date of Contact: _____		
b) Is an application required for the proposed activity?	☐	☐
c) If "YES" then submit a signed copy of the completed application to the DCOM. If "No", explain why an application isn't required. Explanation: _____ Visit the Division of Oil & Gas website for application forms and additional information.		

DNR OFFICE OF HISTORY & ARCHAEOLOGY

	Yes	No
18. Will you investigate, remove, or impact historical, archaeological or paleontological resources (anything over 50 years old) on State-owned land?	☐	☒
19. If you answered yes to the question above, indicate the person you contacted at the State Historic Preservation Office for information. a) Name/date of Contact: _____		

DNR DIVISION OF GEOLOGICAL & GEOPHYSICAL SURVEYS

	Yes	No
20. Is the proposed project located within a natural hazard area designated by a coastal district in the approved district plan? (Refer to the district plan or contact the coastal district office.)	☐	☐
a) If "yes", describe the measures you will take in the siting, design, construction, and operation of the proposed activity to protect public safety, services, and the environment from potential damage caused by the designated natural hazard(s) in the Natural Hazards portion of the attached Coastal Consistency Evaluation (11 AAC 112.210).		
21. If you have contacted someone, please indicate the person you contacted at the Coastal District or the State for information. The Division of Geological & Geophysical Survey **may have** additional information on hazards for the area. a) Name/date of Contact: _____		

DNR DIVISION OF PARKS & OUTDOOR RECREATION

	Yes	No
22. Is the proposed project located in a unit of the Alaska State Park System including navigable waters, tidelands or submerged lands to three miles offshore?	☐	☒
23. If you answered yes to any question above, indicate the person you contacted at the appropriate DNR Division of Parks & Recreation office for information. a) Name/date of Contact: _____		
b) Is an application required for the proposed activity?	☐	☐
c) If "YES" then submit a signed copy of the completed application to the DCOM. If "No", explain why an application isn't required. Explanation: _____		

DNR APPROVALS

List the Department of Natural Resources permits or authorizations required for your project below:

Types of project approvals or permits needed.	Date application submitted

■ DEPARTMENT OF FISH AND GAME (DFG) APPROVALS

	Yes	No
1. Is your project located in a designated State Game Refuge, Critical Habitat Area or State Game Sanctuary?	☐	☒

2. Does your project include construction/operation of a salmon hatchery? ..... ☐ ☐
3. Does your project affect, or is it related to, a previously permitted salmon hatchery? ..... ☐ ☒
4. Does your project include construction of an aquatic farm? ..... ☐ ☒
5. Will you work in, remove water or material from, or place anything in, a stream, river or lake? *(NOTE: This includes work or activities below the ordinary high water mark or on ice, in the active flood plain, on islands, in or on the face of the banks, or, for streams entering or flowing through tidelands, above the level of mean lower low tide. If the proposed project is located within a special flood hazard area, a municipal floodplain development permit may be required. Contact the affected city or borough planning department for additional information and a floodplain determination.)* ..... ☐ ☐
   a) If yes, name of waterbody: _____
6. If you answered yes to any questions above, indicate the person you contacted at the appropriate Department of Fish and Game office for information. *(For projects involving Hatcheries or Aquatic Farms, please contact the Division of Commercial Fisheries. Other projects should contact the Division of Habitat.)*
   a) Name/date of Contact: _____
   b) Is an application required for the proposed activity? ..... ☐ ☐
   c) If "YES" then submit a signed copy of the completed application to the DCOM. If "No", explain why an application isn't required. Explanation: _____

DFG APPROVALS

List the Department of Fish and Game permits or authorizations required for your project below:

Types of project approvals or permits needed.	Date application submitted

■ DEPARTMENT OF ENVIRONMENTAL CONSERVATION (DEC) APPROVALS

DEC DIVISION OF WATER

	Yes	No
1 a) Will a discharge of non-domestic wastewater to lands, waters, or the subsurface of the state occur? *(NOTE: Non-domestic wastewater includes wastewater from commercial or industrial facilities, excavation projects, wastewater from man-made containers or containment areas, or any other non-domestic wastewater disposal activities see 18 AAC 72.990 for definitions.)*	☐	☒
b) Will a discharge of domestic wastewater or septage to lands, waters or the subsurface of the state occur? *(see 18 AAC 72.990 for definitions.)*	☐	☒
c) Will the wastewater disposal activity require a mixing zone or zone of deposit to meet Water Quality Standards (WQS)? (Many disposal activities require a mixing zone to meet WQS, contact DEC if unsure.)	☐	☒
d) Will the project include a stormwater collection/discharge system?	☐	☒
e) Will the project include placing fill in wetlands?	☐	☒
f) Is the surrounding area inundated with water at any time of the year?	☐	☒
g) Do you intend to construct, install, modify or use any part of a domestic or non-domestic wastewater treatment or disposal system?	☒	☐
2. Does your project qualify for a general permit for wastewater?	☒	☐

3. If you answered yes to any questions above, indicate the person you contacted at the DEC-Division of Water for information.
   a) Name/date of Contact: Wade Strickland, June 15, 2011
   b) Is an application required for the proposed activity? ..... ☒ ☐
   c) If "YES" then submit a signed copy of the completed application to the DCOM. If "No", explain why an application isn't required. Explanation: Plan Approval is necessary; Plans will be submitted for approval when completed.

DEC DIVISION OF ENVIRONMENTAL HEALTH

	Yes	No
4 a) Will your project result in construction, modification, or operation of a facility for solid waste disposal? *(NOTE: Solid waste means drilling wastes, household garbage, refuse, sludge, construction or demolition wastes, industrial solid waste, asbestos, and other discarded, abandoned, or unwanted solid or semi-solid material, whether or not subject to decomposition, originating from any source. Disposal means placement of solid waste on land.)*	☐	☒
b) Will your project result in treatment of solid waste at the site? *(Examples of treatment methods include, but are not limited to: incineration, open burning, baling, and composting.)*	☐	☒
c) Will your project result in storage or transfer of solid waste at the site?	☐	☒
d) Will the project result in storage of more than 50 tons of materials for reuse, recycling, or resource recovery?	☐	☒
e) Will any sewage solids or biosolids be disposed of or land-applied to the site? *(NOTE: Sewage solids include wastes that have been removed from a wastewater treatment plant system, such as a septic tank lagoon dredge, or wastewater treatment sludge that contain no free liquids. Biosolids are the solid, semi- solid or liquid residues produced during the treatment of domestic septage in a treatment works which are land applied for beneficial use.)* ..	☐	☒
5. Will your project require application of oil, pesticides, and/or any other broadcast chemicals?	☐	☒
6. Does your project qualify for a general permit for solid waste?	☐	☒
7. If you answered yes to any question above, indicate the person you contacted at the DEC- Division of Environmental Health for information.		
a) Name/date of Contact: _____		
b) Is an application required for the proposed activity?	☐	☐
c) If "YES" then submit a signed copy of the completed application to the DCOM. If "No", explain why an application isn't required. Explanation: _____		

DEC DIVISION OF AIR QUALITY

	Yes	No
8 a) Will you have an asphalt plant designed to process no less than *five tons per hour* of product?	☐	☒
b) Will you have a thermal remediation unit with a rated capacity of at least five tons per hours of untreated material? ..	☐	☒
c) Will you have a rock crusher with a rated capacity of at least five tons per hour?	☐	☒
d) Will you have one or more incinerators with a cumulative rated capacity of 1,000 pounds or more per hour?	☐	☒
e) Will you have a coal preparation plant?	☐	☒
f) Will you have a Port of Anchorage stationary source?	☐	☒
g) Will you have a facility with the potential to emit no less than 100 tons per year of any regulated air contaminant?.....	☐	☒
h) Will you have a facility with the potential to emit no less than 10 tons per year of any hazardous air contaminant or 25 tons per year of all hazardous air contaminants?.....	☐	☒
i) Will you be constructing a new stationary source with a potential to emit greater than:	☐	☒
☐ 15 tons per year (tpy) of PM-10		
☐ 40 tpy of nitrogen oxides		
☐ 40 tpy of sulfur dioxide		
☐ 0.6 tpy of lead; or		
☐ 100 tpy of CO within 10 km of a nonattainment area		
j) Will you be commencing construction, or *(if not already authorized under* 18 AAC 50*)* relocating a portable oil and gas operation? *(answer "yes" unless you will comply with an existing operating permit developed for the portable oil and gas operation at the permitted location; or you will operate as allowed under AS 46.14.275 without an operating permit)*	☐	☒
k) Will you be commencing construction or (if not already authorized under 18 AAC 50) relocating an emission unit with a rated capacity of 10 million Btu or more per hour in a sulfur dioxide special protection area established under 18 AAC 50.025?	☐	☒
l) Will you be commencing a physical change to or a change in the method of construction of an existing stationary source with a potential to emit an air pollutant greater than an amount listed in g) that will cause for that pollutant an emission increase (calculated at your discretion) as either an increase in potential to emit that is greater than:	☐	☒
☐ 10 tpy of PM-10		
☐ 10 tpy of sulfur dioxide		
☐ 10 tpy of nitrogen oxides; or		
☐ 100 tpy of CO within 10 km of a nonattainment area; or		

actual emissions and a net emissions increase greater than:

- ☐ 10 tpy of PM-10
- ☐ 10 tpy of sulfur dioxide
- ☐ 10 tpy of nitrogen oxides; or
- ☐ 100 tpy of CO within 10 km of a nonattainment area

m) Will you be commencing construction or making a major modification of a Prevention of Significant Deterioration stationary source under 18 AAC 50.306? ..... ☐ ☒

n) Will you be commencing construction or making a major modification of a nonattainment area major stationary source under 18 AAC 50.311? ..... ☐ ☒

o) Will you be commencing construction or reconstructing a major stationary source under 18 AAC 50.316, for hazardous air pollutants? Definition of Regulated Air Pollutants can be found at http://www.epa.gov/ttn/oarpg/t5/memoranda/rapdef.pdf ..... ☐ ☒

9. If you answered yes to any questions above, indicate the person you contacted at the DEC- Division of Air Quality for information.

a) Name/date of Contact: _____

b) Is an application required for the proposed activity? ..... ☐ ☒

c) If "YES" then submit a signed copy of the completed application to the DCOM. If "No", explain why an application isn't required. Explanation: _____

DEC DIVISION OF SPILL PREVENTION AND RESPONSE

Yes No

10 a) Will your project involve the operation of waterborne tank vessels or oil barges that carry crude or non crude oil as bulk cargo, or the transfer of oil or other petroleum products to or from such a vessel or a pipeline system? ..... ☐ ☒

b) Will your project require or include onshore or offshore oil facilities with an effective aggregate storage capacity of greater than 5,000 barrels of crude oil or greater than 10,000 barrels of non-crude oil? ..... ☐ ☒

c) Will you operate facilities on land or water for exploration or production of hydrocarbons? ..... ☐ ☒

11. If you answered yes to any questions above, indicate the person you contacted at the DEC-Division of Spill Prevention and Response office for information.

a) Name/date of Contact: _____

b) Is a plan required for the proposed activity? ..... ☐ ☐

c) If "YES" then submit a signed copy of the completed Oil Discharge Prevention & Contingency Plan to the DCOM. If "No", explain why an application isn't required. Explanation: _____

DEC APPROVALS

List the Department of Environmental Conservation permits or authorizations required for your project below:

Types of plan approvals or permits needed	Date application submitted

■ FEDERAL APPROVALS

U.S. ARMY CORPS OF ENGINEERS (USACE)

Yes No

1. Will you discharge dredged and/or fill material or perform dredging activities in waters of the U.S? Section 404 of the Clean Water Act requires that a Department of the Army permit be obtained for the placement or discharge of dredged and/or fill material into waters of the U.S., including wetlands (33 U.S.C. 1344). *(Your application to the USACE would also serve as application for DEC Water Quality Certification.)* ..... ☒ ☐

2. Will you place fill or structures or perform work in waters of the U.S? Section 10 of the Rivers and Harbors Act of 1899 requires that a Department of the Army permit be obtained for structures or work in or affecting navigable waters of the U.S. (33 U.S.C. 403) *(Waters of the U.S. include marine waters subject to the ebb and flow of the tide, rivers, streams, lakes tributaries, and wetlands. If you are not certain whether your proposed project is located within a wetland, contact the USACE Regulatory Division to request a wetlands determination. For additional information about the Regulatory Program, visit www.poa.usace.army.mil/reg)* ..... ☒ ☐

3. If you answered yes to the question above, indicate the person you contacted at the US Army Corps of Engineers for information.
   a) Name/date of Contact: Victor Ross, June 17, 2011
   b) Is an application required for the proposed activity? ..... ☒ ☐
   c) If "YES" then submit a signed copy of the completed application to the DCOM. If "No", explain why an application isn't required. Explanation: _____

BUREAU OF LAND MANAGEMENT (BLM)

	Yes	No
4. Is the proposed project located on BLM land, or will you need to cross BLM land for access?	☐	☒
5. If you answered yes to the question above, indicate the person you contacted at the Bureau of Land Management for information.		
a) Name/date of Contact: _____		
b) Is an application required for the proposed activity?	☐	☐
c) If "YES" then submit a signed copy of the completed application to the DCOM. If "No", explain why an application isn't required. Explanation: _____		

U.S. COAST GUARD (USCG)

	Yes	No
6 a) Do you plan to construct a bridge or causeway over tidal (ocean) waters, or navigable rivers, streams or lakes?	☐	☒
b) Does your project involve building an access to an island?	☐	☒
c) Do you plan to site, construct, or operate a deepwater port?	☐	☒
7. If you answered yes to any question above, indicate the person you contacted at the appropriate US Coast Guard office for information.		
a) Name/date of Contact: _____		
b) Is an application required for the proposed activity?	☐	☒
c) If "YES" then submit a signed copy of the completed application to the DCOM. If "No", explain why an application isn't required. Explanation: _____		

U.S. ENVIRONMENTAL PROTECTION AGENCY (EPA)

	Yes	No
8 a) Will the proposed project have a discharge to any waters?	☐	☐
b) Will you dispose of sewage sludge?	☐	☒
c) Will construction of your project expose 1 or more acres of soil? *(NOTE: This applies to the total amount of land disturbed, even if disturbance is distributed over more than one season, and also applies to areas that are part of a larger common plan of development or sale.)*	☒	☐
d) Is your project an industrial facility that will have stormwater discharge directly related to manufacturing, processing, or raw materials storage areas at an industrial plant? If you answered yes to c) or d), your project may require an NPDES Stormwater permit	☐	☒
9. If you answered yes to any question above, indicate the person you contacted at the US Environmental Protection Agency for information.		
a) Name/date of Contact: _____		
b) Is an application required for the proposed activity?	☐	☒
c) If "YES" then submit a signed copy of the completed application to the DCOM. If "No", explain why an application isn't required. Explanation: Project will need to submit and implement a SWPPP to the State of Alaska, Dept. of Environmental Conservation, Stormwater program.		

FEDERAL AVIATION ADMINISTRATION (FAA)

	Yes	No
10 a) Is your project located within five miles of any public airport?	☒	☐
b) Will you have a waste discharge that is likely to decay within 5,000 feet of any public airport?	☐	☒
11. If you answered yes to the question above, indicate the person you contacted at the Federal Aviation Administration for information.		
a) Name/date of Contact: _____		

FEDERAL ENERGY REGULATORY COMMISSION (FERC)

	Yes	No
12 a) Does the project include any of the following:	☐	☒
1) a non-federal hydroelectric project on any navigable body of water		
2) locating a hydro project on federal land (including transmission lines)		
3) using surplus water from any federal government dam for a hydro project		
b) Does the project include construction and operation, or abandonment of interstate natural gas pipeline facilities under sections 7 (b) and (c) of the Natural Gas Act (NGA)?	☐	☒
c) Does the project include construction and operation of natural gas or liquefied natural gas importation or exportation facilities under section 3 of the NGA?	☐	☒
d) Does the project include construction for physical interconnection of electric transmission facilities under section 202 (b) of the FPA?	☐	☒
13. If you answered yes to any question above, indicate the person you contacted at the appropriate Federal Energy Regulatory Commission office for information.		
a) Name/date of Contact: _____		
b) Is an application required for the proposed activity?	☐	☐
c) If "YES" then submit a signed copy of the completed application to the DCOM. If "No", explain why an application isn't required. Explanation: _____		

U.S. FOREST SERVICE (USFS)

	Yes	No
14 a) Does the proposed project involve construction on USFS land?	☐	☒
b) Does the proposed project involve the crossing of USFS land with a water line?	☐	☒
c) The current list of Forest Service permits that require ACMP consistency review are online at http://alaskacoast.state.ak.us/Clawhome/handbook/pdf/11_AAC_110.pdf in Article 4, 11 AAC 110.400, pages 28-30. Does your proposed project include any of Forest Service authorizations found on pages 28-30 of the ACMP Handbook?	☐	☐
15. If you answered yes to any question above, indicate the person you contacted at United States Forest Service for information.		
a) Name/date of Contact: _____		
b) Is an application required for the proposed activity?	☐	☐
c) If "YES" then submit a signed copy of the completed application to the DCOM. If "No", explain why an application isn't required. Explanation: _____		

U.S. FISH AND WILDLIFE SERVICE (USFWS)

	Yes	No
16 a) Is your proposed project on land managed by the USFWS?	☐	☒
b) Does your project require a Right of Way from the USFWS under 50 C.F.R. 29 and 50 C.F.R 36?	☐	☒
17. If you answered yes to any question above, indicate the person you contacted at the US Fish and Wildlife Service for information.		
a) Name/date of Contact: _____		
b) Is an application required for the proposed activity?	☐	☐
c) If "YES" then submit a signed copy of the completed application to the DCOM. If "No", explain why an application isn't required. Explanation: _____		

OTHER FEDERAL AGENCY APPROVALS

	Yes	No
18 a) Other Federal agencies with authorizations reviewable under the Alaska Coastal Management Program are posted online at http://alaskacoast.state.ak.us/Clawhome/handbook/pdf/11_AAC_110.pdf in Article 4, 11 AAC 110.400, pages 28-30. Does your proposed project include any of the Federal agency authorizations found on pages 28-30 of the ACMP Handbook?	☐	☒
b) If yes, which federal authorizations? _____		

19. Have you applied for any other federal permits or authorizations? ..... ☐ ☒

Agency	Approval Type	Date Submitted

Note: The Coastal Project Questionnaire (CPQ) identifies state and federal permits subject to a consistency review. You may need additional permits from other agencies or the affected city and borough government to proceed with your activity. Attach the documentation requested under the Project Description.

ACMP Consistency Evaluation & Certification Statement

Pursuant to 11 AAC 110.215 (a)(1)(c), the applicant shall submit an evaluation of how the proposed project is consistent with the statewide standards at 11 AAC 112.200 - 11 AAC 112.990 and with the applicable district enforceable policies, sufficient to support the consistency certification. Evaluate your project against each section of the state standards and applicable district enforceable policies using the template below or by submitting a narrative description in letter or report form. District enforceable policies are available on the ACMP website at http://www.alaskacoast.state.ak.us. Definitions of key terms can be found at: 11 AAC 110.990, 11 AAC 112.990 and 11 AAC 114.990.

If you need more space for an adequate explanation of any of the applicable standards, please attach additional pages to the end of this document. Be sure to include references to the specific sections and subsections that you are evaluating.

STATEWIDE STANDARDS

11 AAC 112.200. Coastal Development

Standard:

(a) In planning for and approving development in or adjacent to coastal waters, districts and state agencies shall manage coastal land and water uses in such a manner that those uses that are economically or physically dependent on a coastal location are given higher priority when compared to uses that do not economically or physically require a coastal location.

(b) Districts and state agencies shall give, in the following order, priority to

(1) water-dependent uses and activities;

(2) water-related uses and activities; and

(3) uses and activities that are neither water-dependent nor water-related for which there is no practicable inland alternative to meet the public need for the use or activity.

(c) The placement of structures and the discharge of dredged or fill material into coastal water must, at a minimum, comply with the standards contained in 33 CFR Parts 320 - 323, revised as of July 1, 2003.

Evaluation:

(a) How is your project economically or physically dependent on a coastal location? Why are you proposing to place the project at the selected location?

The project is dependent on its location because it is proposed to serve the community of Chefornak, a coastal location.

(b) Evaluation of development priority.

(1) How is the proposed project water-dependent? Explain.

(2) How is the proposed project water-related? Explain.

(3) If the proposed project is neither water-dependent nor water-related, please explain why there is not a practicable inland alternative that meets the public need for the use or activity. Explain.

The project is neither water dependent or related, however there is no other practicable inland alternative that would serve the community of Chefornak.

(c)

DCOM defers to the United States Corps of Engineers (USACE) to interpret compliance with the referenced standards.
If you plan to discharge or fill waters of the US, have you applied to the Corps of Engineers for the appropriate authorization?
Yes, the Corps permit has been applied for.

---

11 AAC 112.210. Natural hazard areas.
Standard:
(a) In addition to those identified in 11 AAC 112.990, the department, or a district in a district plan, may designate other natural processes or adverse conditions that present a threat to life or property in the coastal area as natural hazards. Such designations must provide the scientific basis for designating the natural process or adverse condition as a natural hazard in the coastal area, along with supporting scientific evidence for the designation.
(b) Areas likely to be affected by the occurrence of a natural hazard may be designated as natural hazard areas by a state agency or, under 11 AAC 114.250(b), by a district.
(c) Development in a natural hazard area may not be found consistent unless the applicant has taken appropriate measures in the siting, design, construction, and operation of the proposed activity to protect public safety, services, and the environment from potential damage caused by known natural hazards.
(d) For purposes of (c) of this section, "appropriate measures in the siting, design, construction, and operation of the proposed activity" means those measures that, in the judgment of the coordinating agency, in consultation with the department's division of geological and geophysical surveys, the Department of Community and Economic Development as state coordinating agency for the National Flood Insurance Program under 44 C.F.R. 60.25, and other local and state agencies with expertise,
(1) satisfy relevant codes and safety standards; or
(2) in the absence of such codes and standards;
(A) the project plans are approved by an engineer who is registered in the state and has engineering experience concerning the specific natural hazard; or
(B) the level of risk presented by the design of the project is low and appropriately addressed by the project plans.
Evaluation:
(a) Describe the natural hazards designated in the district plan as they affect this site.
(b) Describe how the proposed project is designed to accommodate the designated hazards. How will you use site design and operate the proposed activity to protect public safety, services and the environment from potential damaged caused by known natural hazards?
Natural hazards of the site include flooding. However, the lagoon has been designed so that the berms will withstand flooding, including 100 year flood elevations.

(d)(1) Describe the measures you will take to meet relevant codes and safety standards in the siting, design, construction and operation of the proposed activity.
(d)(2)(A) If your project is located in an area without codes and safety standards, how is your project engineered for the specific natural hazard? Give the name of the appropriately qualified registered engineer who will approve the plans for protecting public safety, services, and the environment from damage caused by hazards OR
(d)(2)(B) If the level of risk presented by the design of the project is low, how do the project plans and project design address the potential natural hazard?
The lagoon is designed to withstand flooding. Additionally, the design incorporates all relevant local, state, and federal codes and safety standards.

---

11 AAC 112.220. Coastal access.
Standard:
Districts and state agencies shall ensure that projects maintain and, where appropriate, increase public access to, from, and along coastal water.
Evaluation:

Please explain how the proposed project will maintain and, where appropriate, increase public access to, from and along coastal water.

The project will have no impact on public access to, from, and/or along coastal water.

11 AAC 112.230. Energy facilities.

Standard:

(a) The siting and approval of major energy facilities by districts and state agencies must be based, to the extent practicable, on the following standards:

(1) site facilities so as to minimize adverse environmental and social effects while satisfying industrial requirements;

(2) site facilities so as to be compatible with existing and subsequent adjacent uses and projected community needs;

(3) consolidate facilities;

(4) consider the concurrent use of facilities for public or economic reasons;

(5) cooperate with landowners, developers, and federal agencies in the development of facilities;

(6) select sites with sufficient acreage to allow for reasonable expansion of facilities;

(7) site facilities where existing infrastructure, including roads, docks, and airstrips, is capable of satisfying industrial requirements;

(8) select harbors and shipping routes with least exposure to reefs, shoals, drift ice, and other obstructions;

(9) encourage the use of vessel traffic control and collision avoidance systems;

(10) select sites where development will require minimal site clearing, dredging, and construction;

(11) site facilities so as to minimize the probability, along shipping routes, of spills or other forms of contamination that would affect fishing grounds, spawning grounds, and other biologically productive or vulnerable habitats, including marine mammal rookeries and hauling out grounds and waterfowl nesting areas;

(12) site facilities so that design and construction of those facilities and support infrastructures in coastal areas will allow for the free passage and movement of fish and wildlife with due consideration for historic migratory patterns;

(13) site facilities so that areas of particular scenic, recreational, environmental, or cultural value, identified in district plans, will be protected;

(14) site facilities in areas of least biological productivity, diversity, and vulnerability and where effluents and spills can be controlled or contained;

(15) site facilities where winds and air currents disperse airborne emissions that cannot be captured before escape into the atmosphere;

(16) site facilities so that associated vessel operations or activities will not result in overcrowded harbors or interfere with fishing operations and equipment.

(b) The uses authorized by the issuance of state and federal leases, easements, contracts, rights-of-way, or permits for mineral and petroleum resource extraction are uses of state concern.

Evaluation:

(a) If this standard applies to your project, please describe in detail how the proposed project is designed to meet each applicable section of this standard:

(1)N/A

(2)

(3)

(4)

(5)

(6)

(7)

(8)

(9)

(10)

(11)

(12)

(13)

(14)

(15)_____
(16)_____

(b) List the authorizations for state and federal leases, easements, contracts, rights-of-way, water rights, or permits for mineral and petroleum resource extraction you have applied for or received.

_____

11 AAC 112.240. Utility routes and facilities.
Standard:
(a) Utility routes and facilities must be sited inland from beaches and shorelines unless
(1) the route or facility is water-dependent or water related; or
(2) no practicable inland alternative exists to meet the public need for the route or facility.
(b) Utility routes and facilities along the coast must avoid, minimize, or mitigate
(1) alterations in surface and ground water drainage patterns;
(2) disruption in known or reasonably foreseeable wildlife transit;
(3) blockage of existing or traditional access.

Evaluation:
(a) If the proposed utility route or facility is sited adjacent to beaches or shorelines, explain how the route or facility is water dependent water related or why no practicable inland alternative exists.
The utility route is not sited adjacent to beaches or shorelines.

_____

(b) If the proposed utility route or facility is sited along the coast, explain how you will avoid, minimize or mitigate:
(1) alterations in surface and ground water drainage patterns;

_____

(2) disruption in known or reasonably foreseeable wildlife transit;

_____

(3) blockage of existing or traditional access.

_____

11 AAC 112.250. Timber harvest and processing.
Standard:
AS 41.17 (Forest Resources and Practices Act) and the regulations adopted under that chapter with respect to the harvest and processing of timber are incorporated into the program and constitute the components of the program with respect to those purposes.

Evaluation:
Does your activity involve harvesting or processing of timber? Yes _____ No X
If yes, please explain how your proposed project meets the standards of the State Forest Resources and Practices Act.

_____

11 AAC 112.260. Sand and gravel extraction.
Standard:
Sand and gravel may be extracted from coastal waters, intertidal areas, barrier islands, and spits if there is no practicable alternative to coastal extraction that will meet the public need for the sand or gravel.

Evaluation:
If your proposed project includes extracting sand or gravel from coastal waters, intertidal areas, barrier islands or spits,

please explain why there is no practicable alternative to coastal extraction that meets the public need for sand or gravel. Local silt will be extracted from the lagoon site and used on-site to construct the lagoon berms. There is no practicable alternative for this action if the lagoon is to be built.

11 AAC 112.270. Subsistence.
Standard:
(a) A project within a subsistence use area designated by the department or under 11 AAC 114.250(g) must avoid or minimize impacts to subsistence uses of coastal resources.
(b) For a project within a subsistence use area designated under 11 AAC 114.250(g), the applicant shall submit an analysis or evaluation of reasonably foreseeable adverse impacts of the project on subsistence use as part of
(1) a consistency review packet submitted under 11 AAC 110.215; and
(2) a consistency evaluation under 15 C.F.R. 930.39, 15 C.F.R. 930.58, or 15 C.F.R. 930.76.
(c) Repealed 10/29//2004, Register 172.
(d) Except in nonsubsistence areas identified under AS 16.05.258, the department may, after consultation with the appropriate district, federally recognized Indian tribes, Native corporations, and other appropriate persons or groups, designate areas in which a subsistence use is an important use of coastal resources as demonstrated by local usage.
(e) For purposes of this section, "federally recognized Indian tribe," "local usage", and "Native corporation" have the meanings given in 11 AAC 114.990.

Evaluation:
(a) Is your proposed project located within a subsistence use area designated by a coastal district?
Yes _____ No X
If yes, please describe how the proposed project is designed to "avoid or minimize impacts to subsistence uses of coastal resources:"

(b) If your project is located in a subsistence use area designated by the coastal district, provide an analysis or evaluation of its reasonably foreseeable adverse impacts to the subsistence uses.

(c) No response required.

(d) If your project is not located in a designated subsistence use area, please describe any subsistence uses of coastal resources within the project area. Please be advised that subsistence use areas may be designated by the department during a review.

(e) No response required.

11 AAC 112.280. Transportation routes and facilities.
Standard:
Transportation routes and facilities must avoid, minimize, or mitigate
(1) alterations in surface and ground water drainage patterns;
(2) disruption in known or reasonably foreseeable wildlife transit; and
(3) blockage of existing or traditional access.

Evaluation:
If your proposed project includes transportation routes or facilities, describe how it avoids, minimizes, or mitigates
(1) alterations in surface and ground water drainage patterns;

N/A

(2) disruption in known or reasonably foreseeable wildlife transit; and

(3) blockage of existing or traditional access.

11 AAC 112.300. Habitats.
Standard:
(a) Habitats in the coastal area that are subject to the program are
(1) offshore areas;
(2) estuaries;
(3) wetlands;
(4) tideflats;
(5) rocky islands and sea cliffs;
(6) barrier islands and lagoons;
(7) exposed high-energy coasts;
(8) rivers, streams, and lakes and the active floodplains and riparian management areas of those rivers, streams, and lakes; and
(9) important habitat.
(b) The following standards apply to the management of the habitats identified in (a) of this section:
(1) offshore areas must be managed to avoid, minimize, or mitigate significant adverse impacts to competing uses such as commercial, recreational, or subsistence fishing, to the extent that those uses are determined to be in competition with the proposed use;
(2) estuaries must be managed to avoid, minimize, or mitigate significant adverse impacts to
(A) adequate water flow and natural water circulation patterns; and
(B) competing uses such as commercial, recreational, or subsistence fishing, to the extent that those uses are determined to be in competition with the proposed use;
(3) wetlands must be managed to avoid, minimize, or mitigate significant adverse impacts to water flow and natural drainage patterns;
(4) tideflats must be managed to avoid, minimize, or mitigate significant adverse impacts to
(A) water flow and natural drainage patterns; and
(B) competing uses such as commercial, recreational, or subsistence uses, to the extent that those uses are determined to be in competition with the proposed use;
(5) rocky islands and sea cliffs must be managed to
(A) avoid, minimize, or mitigate significant adverse impacts to habitat used by coastal species; and
(B) avoid the introduction of competing or destructive species and predators;
(6) barrier islands and lagoons must be managed to avoid, minimize, or mitigate significant adverse impacts (A) to flows of sediments and water;
(B) from the alteration or redirection of wave energy or marine currents that would lead to the filling in of lagoons or the erosion of barrier islands; and
(C) from activities that would decrease the use of barrier islands by coastal species, including polar bears and nesting birds;
(7) exposed high-energy coasts must be managed to avoid, minimize, or mitigate significant adverse impacts
(A) to the mix and transport of sediments; and
(B) from redirection of transport processes and wave energy;
(8) rivers, streams, and lakes must be managed to avoid, minimize, or mitigate significant adverse impacts to
(A) natural water flow;
(B) active floodplains; and
(C) natural vegetation within riparian management areas; and
(9) important habitat
(A) designated under 11 AAC 114.250(h) must be managed for the special productivity of the habitat in accordance with

district enforceable policies adopted under 11 AAC 114.270(g); or
(B) identified under (c)(1)(B) or
(C) of this section must be managed to avoid, minimize, or mitigate significant adverse impacts to the special productivity of the habitat.
(c) For purposes of this section,
(1) "important habitat" means habitats listed in (a)(1) – (8) of this section and other habitats in the coastal area that are
(A) designated under 11 AAC 114.250(h);
(B) identified by the department as a habitat
(i) the use of which has a direct and significant impact on coastal water; and
(ii) that is shown by written scientific evidence to be biologically and significantly productive; or
(C) identified as state game refuges, state game sanctuaries, state range areas, or fish and game critical habitat areas under AS 16.20;
(2) "riparian management area" means the area along or around a waterbody within the following distances, measured from the outermost extent of the ordinary high water mark of the waterbody:
(A) for the braided portions of a river or stream, 500 feet on either side of the waterbody;
(B) for split channel portions of a river or stream, 200 feet on either side of the waterbody;
(C) for single channel portions of a river or stream, 100 feet on either side of the waterbody;
(D) for a lake, 100 feet of the waterbody.

Evaluation:
(a) List the habitats from (a) above that are within your proposed project area or that could be affected by your proposed project.
Wetlands

(b) Describe how the proposed project avoids, minimizes, or mitigates impacts to each of the identified habitat(s) in section (a) above. Implementation of a SWPPP to prevent runoff from the project area; excavation and surface impact will be minimized – only the area necessary for the lagoon and pipeline route will be used, equipment will be kept within strict boundaries on the project.

(c) No response required.

11 AAC 112.310. Air, land and water quality
Standard:
Not withstanding any other provision of this chapter, the statutes and regulations of the Department of Environmental Conservation with respect to the protection of air, land, and water quality identified in AS 46.40.040(b) are incorporated into the program and, as administered by that department, constitute the exclusive components of the program with respect to those purposes.

Evaluation: No response required.

11 AAC 112.320. Historic, prehistoric, and archeological resources.
Standard:
(a) The department will designate areas of the coastal zone that are important to the study, understanding, or illustration of national, state, or local history or prehistory, including natural processes.
(b) A project within an area designated under (a) of this section shall comply with the applicable requirements of AS 41.35.010 – 41.35.240 and 11 AAC 16.010 – 11 AAC 16.900.

Evaluation:
(a) Have you contacted the State Historic Preservation Office (SHPO) to see if your project is in a designated area of the coastal zone that is important to the study, understanding, or illustration of national, state, or local history or prehistory, including natural processes?

State of Alaska, Department of Natural Resources, Division of Coastal & Ocean Management

SHPO has been contacted as has the AVCP staff archeologist.

(b) If your project is within an area designated under (a) of this section, how will you comply with the applicable requirements in the statutes and regulations listed in (b)?
The project will comply with SHPO stipulations, if any.

Affected Coastal District Enforceable Policies: SEE ATTACHED PAGES

Evaluate each applicable district enforceable policy using a format similar to the one you completed above for the State Standards. District enforceable policies are available at http://alaskacoast.state.ak.us/. If you need more space for an adequate explanation of any of the applicable district enforceable policies, please attach additional pages to the end of this document.

Applicable District Plan(s) _____

Enforceable Policy: _____

Evaluation:

_____

_____

Enforceable Policy: _____

Evaluation:

_____

_____

Enforceable Policy: _____

Evaluation:

_____

_____

Certification Statement

The information contained herein is true and complete to the best of my knowledge. I certify that the proposed activity complies with, and will be conducted in a manner consistent with, the Alaska Coastal Management Program.

_____ _____

Signature of Applicant or Agent Date

Note: Federal agencies conducting an activity that will affect the coastal zone are required to submit a federal consistency determination, per 15 CFR 930, Subpart C, rather than this certification statement.
ACMP has developed a guide to assist federal agencies with this requirement. Contact ACMP to obtain a copy.

This certification statement will not be complete until all required State and federal authorization requests have been submitted to the appropriate agencies.

Project Description: Please provide or attach a brief description of your project including the planned work, any effects to coastal uses and resources and how your project is being designed to avoid, minimize and mitigate those effects.

The Chefornak Lagoon and Force Main project has two components:

- A five acre wastewater lagoon with discharge of treated effluent to land, and
- A 1,900 foot, overland pipe with an outer diameter of 12", connecting the lagoon to an existing school pipe.

Project Area: Please provide or attach a map of your project location and your proposed work. (Including nearest community, the name of the nearest land feature or body of water, and other legal description such as a survey or lot number.)

Nearest Community: Chefornak

Nearest Waterbody: Kinia River

Legal Survey Description: Section 19, T 01N, R 86W

Ceñaliulriit Coastal Resource Service Area Management Plan

Proposed Chefornak Lagoon Evaluation

4.4 Enforceable Policies

C. Coastal Development
C-1. Multiple Use
a. Project applicants shall site, design, construct, and operate structures or dredged of fill material placed in coastal waters to minimize the need for duplicative coastal facilities.

b. This policy applies to uses and activities areas covered by the Coastal Development standard (11 AAC 112.200).

EVALUATION: The Chefornak Lagoon project is not a duplicative project.

C-2. Optimum Shoreline Use
a. The following water dependent uses shall be given priority consideration for waterfront use in the following order: Subsistence fishing sites, commercial fishing sites, and fishing gear storage.

b. This policy applies to uses and activities covered by the statewide Coastal Development standard (11 AAC.112.200).

EVALUATION: The Chefornak Lagoon project is not located on a waterfront and will not conflict with subsistence fishing, commericial fishing, or fishing gear storage.

D. Natural Hazards
D-1. Ice Hazards
a. Project facilities shall not be located in areas subject to ice hazards unless there is no practicable alternative.

b. This policy applies to all areas designated for natural ice hazards under 11 AAC 114.250(b) as described in Section 4.5.2.

EVALUATION: The proposed lagoon location is not subject to ice hazards.

G. Sand and Gravel Extraction
G-2. Sand and Gravel Priority Siting
a. Sand and gravel operations shall be located in areas using the following order of priority:
1) Sand and gravel from already disturbed areas where existing development has been abandoned,

2) Existing sand and gravel sources unless alternate sites would result in less impacts to habitat and subsistence uses,
3) New upland pits,
4) Rivers, streams and lakes that do not support fish,
5) Shoreline and offshore gravel sources,
6) Floodplain gravel sources, and

EVALUATION: The proposed lagoon will use in-situ silt for construction; no other sites will be used for mining gravel.

4.5 Designated Areas

4.5.2 Natural Hazard Areas

The CRSA designates three types of natural hazard areas under 11 AAC 114.250 for all
non-federal lands within the district's coastal zone:
• Permafrost: All land based areas above high tide a natural hazard area for permafrost,
• Ice Hazards: All offshore areas for ice hazards.

Uses and activities that could be proposed for areas designated as natural hazard areas include: Subsistence harvests, hunting and fishing, cultural uses, commercial fishing, independent backcountry recreation, commercial recreation, tourism, development of transportation and utility routes and facilities, sand and gravel extraction, onshore and offshore mining, onshore and offshore oil and gas exploration and development, housing and subdivisions, remote camps, and off-road travel.

EVALUATION: Permafrost is a natural hazard at the proposed site, however the project is a utility route and a utility facility and utility routes and facilities are a stated proposed use of permafrost natural hazard areas.

US Army Corps
of Engineers
Alaska District

Regulatory Division (1145)
CEPOA-RD
Post Office Box 6898
JBER, Alaska 99506-0898

Public Notice of Application for Permit

PUBLIC NOTICE DATE:	August 16, 2011
EXPIRATION DATE:	September 16, 2011
REFERENCE NUMBER:	POA-2011-640
WATERWAY:	Kinia River

Interested parties are hereby notified that a Department of the Army permit application has been received for work in waters of the United States as described below and shown on the enclosed project drawings.

Comments on the described work, with the reference number, should reach this office no later than the expiration date of this Public Notice to become part of the record and be considered in the decision. Please contact **Victor Ross** at (907) 753-2779, toll free from within Alaska at (800) 478-2712, by fax at (907) 753-5567, or by email at **victor.o.ross@usace.army.mil** if further information is desired concerning this notice.

APPLICANT: The City of Chefornak, Post Office Box 29, Chefornak, Alaska 99561.

AGENT: Susan Randlett, ADEC Safe Water, 555 Cordova Street, Anchorage, Alaska 99501.

LOCATION: The project site is located within Section 19, T. 01N., R. 86W., Seward Meridian; USGS Quad Map Baird Inlet A-7; Latitude N 60° 09' 34", Longitude W 164° 15' 58"; USS 4421, Chefornak, Alaska.

PURPOSE: The applicant's stated purpose is to provide the City of Chefornak with a modern sewage disposal facility.

PROPOSED WORK: Build an elevated sewage force main from the community of Chefornak to the proposed new sewage lagoon site. Complete three new cells for sewage disposal. A pre-treatment cell, a primary cell, and a secondary cell would all be constructed. The berms for the lagoons would be constructed from the material excavated from within the cells. The finished force main would be above ground and impact an area eight feet wide by 1,900 feet long. The lagoons would encompass a total of eight acres. All work would be performed in accordance with the enclosed plan (sheets 1-3), dated July 2011.

ADDITIONAL INFORMATION: The berms for the cells would be fill material und jurisdiction. Only the berms and the wood sleepers placed directly on the for the force main would constitute fill under Corps jurisdiction.

COPS 2011

The disposal of sewage in the cell is not a jurisdictional activity requiring a permit from the Corps. The excavation of the material from the cells is also not a Corps regulated activity. The total acreage of the cells is provided as a reference for the secondary impacts of a regulated activity.

APPLICANT PROPOSED MITIGATION: The applicant proposes the following mitigation measures to avoid, minimize, and compensate for impacts to waters of the United States from activities involving discharges of dredged or fill material.

a. Avoidance: The community is surrounded by wetlands. There is no alternative to the placement of fill for the new lagoon berms, and for the force main route.

b. Minimization: No road is planned for the force main. The force main will be placed on sleepers on the ground to eliminate gravel fill. An elevated pathway over the sleepers is planned for permanent access. Construction is planned in winter to reduce the need for construction support fill. No road will be built for the force main. The fill material for the berms will be excavated from the center of the lagoons. No material pit is required.

c. Compensatory Mitigation: None is proposed. All construction funds are required to supply a modern sewage disposal facility for the City of Chefornak. The new sewage lagoon will result in cleaner water for the aquatic environment.

WATER QUALITY CERTIFICATION: A permit for the described work will not be issued until a certification or waiver of certification, as required under Section 401 of the Clean Water Act (Public Law 95-217), has been received from the Alaska Department of Environmental Conservation.

CULTURAL RESOURCES: The latest published version of the Alaska Heritage Resources Survey (AHRS) has been consulted for the presence or absence of historic properties, including those listed in or eligible for inclusion in the National Register of Historic Places. There are no listed or eligible properties in the vicinity of the worksite. Consultation of the AHRS constitutes the extent of cultural resource investigations by the District Commander at this time, and he is otherwise unaware of the presence of such resources. This application is being coordinated with the State Historic Preservation Office (SHPO). Any comments SHPO may have concerning presently unknown archeological or historic data that may be lost or destroyed by work under the requested permit will be considered in our final assessment of the described work.

ENDANGERED SPECIES: No threatened or endangered species are known to use the project area.

This application is being coordinated with the U.S. Fish and Wildlife Service and the National Marine Fisheries Service (NMFS). Any comments they may have concerning endangered or threatened wildlife or plants or their critical habitat will be considered in our final assessment of the described work.

ESSENTIAL FISH HABITAT: The Magnuson-Stevens Fishery Conservation and Management Act, as amended by the Sustainable Fisheries Act of 1996, requires all Federal agencies to consult with the NMFS on all actions, or proposed actions, permitted, funded, or undertaken by the agency, that may adversely affect Essential Fish Habitat (EFH).

Preliminarily, we have determined the described activity would not adversely affect EFH in the project area.

TRIBAL CONSULTATION: The Alaska District fully supports tribal self-governance and government-to-government relations between Federally recognized Tribes and the Federal government. Tribes with protected rights or resources that could be significantly affected by a proposed Federal action (e.g., a permit decision) have the right to consult with the Alaska District on a government-to-government basis. Views of each Tribe regarding protected rights and resources will be accorded due consideration in this process. This Public Notice serves as notification to the Tribes within the area potentially affected by the proposed work and invites their participation in the Federal decision-making process regarding the protected Tribal right or resource. Consultation may be initiated by the affected Tribe upon written request to the District Commander during the public comment period.

PUBLIC HEARING: Any person may request, in writing, within the comment period specified in this notice, that a public hearing be held to consider this application. Requests for public hearings shall state, with particularity, reasons for holding a public hearing.

EVALUATION: The decision whether to issue a permit will be based on an evaluation of the probable impacts, including cumulative impacts of the proposed activity and its intended use on the public interest. Evaluation of the probable impacts, which the proposed activity may have on the public interest, requires a careful weighing of all the factors that become relevant in each particular case. The benefits, which reasonably may be expected to accrue from the proposal, must be balanced against its reasonably foreseeable detriments. The outcome of the general balancing process would determine whether to authorize a proposal, and if so, the conditions under which it will be allowed to occur. The decision should reflect the national concern for both protection and utilization of important resources. All factors, which may be relevant to the proposal, must be considered including the cumulative effects thereof. Among those are conservation, economics, aesthetics, general environmental concerns, wetlands, cultural values, fish and wildlife values, flood hazards, floodplain values, land use, navigation, shore erosion and accretion, recreation, water supply and conservation, water quality, energy needs, safety, food and fiber production, mineral needs, considerations of property ownership, and, in general, the needs and welfare of the people. For activities involving 404 discharges, a permit will be denied if the discharge that would be authorized by such permit would not comply with the Environmental Protection Agency's 404(b)(1) guidelines. Subject to the preceding sentence and any other applicable guidelines or criteria (see Sections 320.2 and 320.3), a permit will be granted unless the District Commander determines that it would be contrary to the public interest.

The Corps of Engineers is soliciting comments from the public; Federal, State, and local agencies and officials; Indian Tribes; and other interested parties in order to consider and evaluate the impacts of this proposed activity. Any comments received will be considered by the Corps of Engineers to determine whether to issue, modify, condition or deny a permit for this proposal. To make this decision, comments are used to assess impacts on endangered species, historic properties, water quality, general environmental effects, and the other public interest factors listed above. Comments are used in the preparation of an Environmental Assessment and/or an Environmental Impact Statement pursuant to the National Environmental Policy Act. Comments are also used to determine the need for a public hearing and to determine the overall public interest of the proposed activity.

AUTHORITY: This permit will be issued or denied under the following authority:

(X) Discharge dredged or fill material into waters of the United States - Section 404 Clean Water Act (33 U.S.C. 1344). Therefore, our public interest review will consider the guidelines set forth under Section 404(b) of the Clean Water Act (40 CFR 230).

Project drawings and a Notice of Application for State Water Quality Certification are enclosed with this Public Notice.

District Commander
U.S. Army, Corps of Engineers

Enclosures

SEAN PARNELL, GOVERNOR

STATE OF ALASKA

DEPT. OF ENVIRONMENTAL CONSERVATION
DIVISION OF WATER
401 Certification Program
Non-Point Source Water Pollution Control Program

DEPARTMENT OF ENVIRONMENTAL CONSERVATION
WQM/401 CERTIFICATION
555 CORDOVA STREET
ANCHORAGE, ALASKA 99501-2617
PHONE: (907) 269-7564/FAX: (907) 334-2415

NOTICE OF APPLICATION
FOR
STATE WATER QUALITY CERTIFICATION

Any applicant for a federal license or permit to conduct an activity that might result in a discharge into navigable waters, in accordance with Section 401 of the Clean Water Act of 1977 (PL95-217), also must apply for and obtain certification from the Alaska Department of Environmental Conservation that the discharge will comply with the Clean Water Act, the Alaska Water Quality Standards, and other applicable State laws. By agreement between the U.S. Army Corps of Engineers and the Department of Environmental Conservation, application for a Department of the Army permit to discharge dredged or fill material into navigable waters under Section 404 of the Clean Water Act also may serve as application for State Water Quality Certification.

Notice is hereby given that the application for a Department of the Army Permit described in the Corps of Engineers' Public Notice No. **POA-2011-640, Kinia River**, serves as application for State Water Quality Certification from the Department of Environmental Conservation.

After reviewing the application, the Department may certify there is reasonable assurance the activity, and any discharge that might result, will comply with the Clean Water Act, the Alaska Water Quality Standards, and other applicable State laws. The Department also may deny or waive certification.

Any person desiring to comment on the project, with respect to Water Quality Certification, may submit written comments to the address above by the expiration date of the Corps of Engineer's Public Notice.

Randlett, Susan A (DEC)

From: Paul Weisner <p.weisner@ce2engineers.com>
Sent: Tuesday, January 28, 2014 5:40 PM
To: Randlett, Susan A (DEC)
Subject: Chefornak contaminated sites

Susan,

I have examined the State of Alaska contaminated sites database, with sites numbered 3778, 3779, 3780, 3781, and 3782 using the ARCGIS website. The URL for this site is

http://www.arcgis.com/home/webmap/viewer.html?webmap=315240bfbaf84aa0b8272ad1cef3cad3

None of the Chefornak Grant Projects will have any work performed or material storage sites utilized closer than 100 ft of the above mention sites.

Regards,

Paul C. Weisner, P.E.
CE2 Engineers, Inc.
PO Box 232946
Anchorage, AK 99523-2946
Ph (907) 349-1010
Fax (907 349-1015
email: p.weisner@ce2engineers.com

CONT. SITES

Division of Spill Prevention and Response

Contaminated Sites Program

CSP Database Search Results

New CSP Database Search

Records Found: 6 **2/4/2014**

	Hazard ID	Site Name	Location	Status	File ID	Closure Details	Open Sites with Institutional Controls	Cleanup Chronology
1	2609	AKARNG Chefornak FSA	Unnamed Road, Chefornak, AK 99561	Cleanup Complete	2408.38.001			
2	3778	Chefornak Light Plant Former Tank Farm	South Bank of Kinia River, Chefornak, AK 99561	Open	2408.38.002			
3	3779	Chefornak Chefarnrmute Corp. Former Tank Farm	South Bank of Kinia River, Chefornak, AK 99561	Open	2408.38.005			
4	3780	Chefornak Avugiak Store	South Bank of Kinia River, Chefornak, AK 99561	Open	2408.38.006			
5	3781	Chefornak School Tank Farm	South Bank of Kinia River, Chefornak, AK 99561	Cleanup Complete - Institutional Controls	2408.38.007			
6	3782	Chefornak Former BIA School Tanks	South Bank of Kinia River, Chefornak, AK 99561	Open	2408.38.008			

New CSP Database Search

Back to the Top

For questions about contaminated sites information, please contact:
Evonne Reese, Environmental Program Specialist, (907) 465-5229.

For CSP database technical support or assistance, please contact:
Jeremy Frank, Analyst Programmer, (907) 465-5267.

Randlett, Susan A (DEC)

From: Mccabe, Gene C (DEC)
Sent: Wednesday, February 05, 2014 1:10 PM
To: Randlett, Susan A (DEC)
Subject: RE: Wastewater Plan Set at 65%

Susan,

At the 65% design point, as long as we stay on course with the BOD loading rate for the lagoon, I don't see any major issues moving forward with an Approval to Construct and ultimately an Approval to Operate. We've pinned down the major basis for design parameters at the 65% review. As long as they stay constant, we should be able to turn the 95% review quickly, but it all depends on workload at the time of submittal and if there are any changes since 65%.

I hope that helps some.

Gene

Gene McCabe
Engineering Support & Plan Review
907-269-7692

From: Randlett, Susan A (DEC)
Sent: Tuesday, February 04, 2014 3:24 PM
To: Mccabe, Gene C (DEC)
Subject: Wastewater Plan Set at 65%

WW
permit
to cons

Gene,

http://dec.alaska.gov/water/vsw/ProjectSites/chefornakProject/pdfs/Chefornak_Wastewater_Lagoon_65_JAN_2014.pdf

I am preparing a list of permits received for the lagoon/force main.

I realize that no Approval to Construct has been issued, because the sealed agency review set has not been issued. The design has been under discussion since 2011, and comments from Wastewater have been incorporated into the design.

Would you please comment on:

1) Is there any issue which might prevent an Approval to Operate?
2) Given the Wastewater program's familiarity with the plan set, what can I expect for turnaround on delivery of the 95%?

Thank you.

Susan

Appendix B

Eight Step Process for Floodplain Development

8 Step Process for Floodplains Development Cross Reference Matrix		
Step	**Description**	**Section of EA**
1	Identify floodplains in project area	3.1
2	Conduct early public involvement and inter-agency coordination (Public notice)	1.2-1.3
3	Identify practicable alternatives	2.1.2
4	Assess effects (Impacts)	3.0-3.11
5	Minimize effects	3.0-3.11
6	Re-evaluate alternatives	FONSI
7	Document effects and notify public (Public notice to FONSI)	1.3/FONSI
8	Ensure post-implementation compliance	Construction Documents

Eight-Step Planning Process for Floodplains **Construction of Water and Wastewater System Improvements, City of Chefornak**	
Step 1: Determine whether the Proposed Action is located in a 100-year floodplain, or whether it has the potential to be affected by a floodplain. The proposed project includes the construction of water and sewer improvements within the City of Chefornak. <u>Water System Improvements</u> – Upgrade a well head and bring electrical connections to code, erect a bolted steel water tank, replace a pumphouse, as well as construct a new one, construct a new washeteria and upgrades to 12 existing watering points. <u>Wastewater System Improvements</u> -- Instillation of a sewage transfer station, a new lift station to serve the new washeteria, install 2,100 LF above ground extension of the school's force main, and construction of a 4.2 acre sewage lagoon.	**Project Analysis:** Flooding is a minimal hazard in Chefornak as the community is located on a raised outcropping of rock which protects it from river flooding. However, the area adjacent to the community is relatively flat and is subject to periodic flooding caused by snow melt, rainfall runoff, and occasional high water from the Kinia River. Snowmelt run-off and rainfall flooding occurs during spring thaw and the fall rainy season as a result of soil saturation (City of Chefornak, 2014). No FEMA mapping exists for the project site. The USACE website does not have a listing for a base flood elevation, as there has been no flood of record. (http://66.223.166.160/floodplain_data/Chefornak/Documents/chefornak_summary_sheet.pdf) The highest flood point is estimated to be at 76.8 feet above sea level, as determined by the flotsam mounds along the river bank. Some aspects of the Proposed Action, such as the water treatment plant, washeteria, watering points, water storage tank, and pumphouses would not be located within the floodplain. A 2013 CE2 report shows that the ground elevation in those areas is approximately 95 feet, which is well above historical high water. The remaining elements of the Proposed Action include the sewage lagoon and force main extension and associated boardwalk. These components are located entirely within relative low flat wetlands. Design drawings from CE2 Engineers, Inc. dated February 2014 show surface elevations for the sewage lagoon of between approximately 77 and 79 feet. Based on their finding of flotsam mounds very near the base elevation of the sewage lagoon and force main, and confirmation from the USACE that the community has 3-4 feet of freeboard at flood stage, it is likely that a portion exists within the floodplain.
Step 2: Notify public at earliest possible time of the intent to carry out an action in a floodplain, and involve the affected and	**Project Analysis:** The public has been included in all decision making for this project. Public meetings were held in the community of Chefornak with the assistance of a Yup'ik translator. These meeting were held to gather public comments on the project and its design. No negative comments were received regarding the project; all comments collected were in support of the

interested public in the decision-making process.	project. The community believes strongly that these improvements should have already been made years ago, as their existing water and wastewater system is in profound disrepair, resulting in a public health threat. A 30-day public notice to gather public comment specific to the floodplain concerns was issued by the United States Department of Health and Human Services Indian Health Service was posted at the City Hall in the City of Chefornak on July 15, 2014. This federal public notice addressed 3 issues related to the floodplain: potential loss of infrastructure, environmental degradation, and public safety. No comments have been submitted since the notice was posted.
Step 3: Identify and evaluate practicable alternatives to locating the Proposed Action in a floodplain.	**Project Analysis:** The area surrounding the community is comprised of relatively uniform flat topography. Locating the sewage lagoon outside of the floodplain would involve relocating more than twice the distance from the community and could not be accomplished within City land and boundaries. Therefore, there is no practical alternative that avoids placement within the floodplain. However, due to the relatively similar elevation and vast expanse of the floodplain in relation to the fill area of approximately 8 acres, impacts to the floodplain are considered negligible. As potential mitigation associated with construction within the floodplain, all engineering designs would be required to withstand these potential flooding events. The No Action Alternative would not result in any impacts to the floodplain. Conditions would continue as they currently exist, and the risk of flooding in the community would remain low.
Step 4: Identify the full range of potential direct or indirect impacts associated with the occupancy or modification of floodplains, and the potential direct and indirect support of floodplain development that could result from the Proposed Action.	**Project Analysis:** The proposed project will not affect the functions and values of the floodplain. Neither lagoon nor force main will impede or redirect flood flows due to the overall flat topography of the community and the delta which stretches for hundreds of miles. All other project elements are located above the known flood elevation of 76.8 feet. As no local ordinances or building codes exist in Chefornak, the project utilized local survey and interviews to determine the estimated flood elevation. Although the Proposed Action would result in temporary impacts to the floodplain (e.g. temporary removal of vegetation, excavation and fill activities, and increased sediment flow) during construction activities, VSW will utilize standard sedimentation and erosion control best management practices to minimize such impacts. Types of best management practices to be used are re-vegetation with native species, installation of silt fences and the use of vegetated buffers. The

	only permanent impact to the floodplain will be an overall improvement to water quality, as raw sewage would be removed from the community and deposited within the new sewage lagoon. To avoid impediments to the movement of floodwaters, the Proposed Action will engineer all structures to withstand a flood event. No element of the Proposed Action would impede flood flows due to the vast size of the coastal delta where Chefornak is located.
Step 5: Minimize the potential adverse impacts from work within floodplains (id'd in step 4.), restore and preserve the natural and beneficial values served by floodplains.	**Project Analysis:** Impacts to floodplains would been minimized by: • Raising all new infrastructure to the maximum practical extent. • No work will occur that disturbs the banks of the Kinia River. • Project components have been buried to the extent feasible. • All work will occur within existing community boundaries. Footprints for project activities have been reduced to the smallest possible area and sediment and erosion control best management practices will be used during all ground disturbing activities. Re-vegetation will be initiated on areas of ground disturbance. All project elements with the exception of the force main and sewage lagoon are located at least one foot above the flood elevation. The force main and sewage lagoon would be engineered to withstand a flood event and the sewage lagoon berms would be as much as seven feet above flood elevations. The Proposed Action will not have an impact on public safety related to the floodplain. The community will continue to live at risk of flood events. This information is also reviewed in the Environmental Assessment.
Step 6: Re-evaluate the Proposed Action to determine: 1. If it is still practical in light of its exposure to flood hazards 2. The extent to which it will aggravate the hazards to others 3. Its potential to disrupt floodplain values	**Project Analysis:** The proposed project remains the only practicable alternative to eliminate the dire sanitation conditions that currently exist in the City of Chefornak. The project will not expose any segment of the population to additional flood hazards because of the overall flat terrain found in the surrounding area. None of the project components will impede or redirect flood flows, nor will floodplain values be disrupted as the water levels in the floodplain will not change as a result of this project. Therefore, it is still practicable to construct the proposed project within the floodplain. These results are preliminary, pending public comment. The public notice for the proposed project addressed three issues: 1. Loss of existing and proposed infrastructure due to potential flood events, 2. Environmental degradation due to flooding of the existing and proposed improved sewage lagoon, and 3. Public Safety due to the location of existing homes in the floodplain.

Step 7: If the agency decides to take action in a floodplain, prepare and provide the public with a finding and explanation of any final decision that the floodplain is the only practicable alternative. The explanation should include any relevant factors considered in the decision-making process.	**Project Analysis:** An Environmental Assessment public notice will be posted at the Chefornak Post Office informing the public of the decision to proceed with the project. The public notice will include a list of the alternatives considered, a statement how the project affects the floodplain, and a statement of the minimization steps that have been incorporated into the project.
Step 8: Review the implementation and post implementation phases of the Proposed Action to ensure that the requirements of the EO is fully implemented. Oversight responsibility shall be integrated into existing processes.	**Project Analysis:** This step is integrated into the NEPA process, the engineering design plans and specifications, and the Construction Management's oversight functions.

Appendix C

Construction Costs

Pump House 1 (Replacing Old PHS Water Plant and Upgrading 1 Well)					
Item	Activity	Unit	Unit Price	Quantity	Cost
1	Triodetic Foundation	LS	$14,000	1	$14,000
2	Floor + Steps	LS	$14,000	1	$14,000
3	Structure Shell (SIP)	LS	$14,000.00	1	$14,000
4	Metal Siding and Roofing	LS	$8,500.00	1	$8,500
5	Doors	LS	$6,000	1	$6,000
6	Horizontal Tank HDPE	LS	$8,000	1	$8,000
7	Mechanical Equipment	LS	$75,000	1	$75,000
8	Electrical Equipment	LS	$50,000	1	$50,000
9	Well improvements and arctic pipe connecting lines	LS	$35,000	1	$35,000
10	Boardwalk to building	FT	$500	100	$50,000
11	Core Crew (Supt, Plumber, Electrician)	LS	$90,000	1	$90,000
12	Local Force Account Crew	LS	$144,000	1	$144,000
13	Freight	LS	$75,000	1	$75,000
	*2013 dollars assuming force account construction / local wages			Subtotal	$583,500
				Contingency (20%)	$116,700
				Subtotal w/contingency	$700,200
				Design (8%)	$56,000
				Construction Management	$126,000
				VSW EMT(8%)	$56,000
				NE Pumphouse 1 Total	**$938,200**

Pump House 2 (New Pump House for South Well Field and Hooking up 2 Wells)					
Item	Activity	Unit	Unit Price	Quantity	Cost
1	Triodetic Foundation	LS	$14,000.00	1	$14,000
2	Floor + Steps	LS	$14,000.00	1	$14,000
3	Structure Shell (SIP)	LS	$14,000.00	1	$14,000
4	Metal Siding and Roofing	LS	$8,500.00	1	$8,500
5	Doors	LS	$6,000	1	$6,000
6	Horizontal Tank HDPE	LS	$8,000	1	$8,000
7	Mechanical Equipment	LS	$75,000	1	$75,000
8	Electrical Equipment	LS	$50,000	1	$50,000
9	Well improvements and arctic pipe connecting lines	LS	$100,000	1	$100,000
10	Boardwalk to building	FT	$500	300	$150,000
11	Core Crew (Supt, Plumber, Electrician)	LS	$90,000	1	$90,000
12	Local Force Account Crew	LS	$144,000	1	$144,000
13	Freight	LS	$75,000	1	$75,000
	*2013 dollars assuming force account construction / local wages			Subtotal	$748,500
				Contingency (20%)	$149,700
				Subtotal w/contingency	$898,200
				Design (8%)	$71,900
				Construction Management (15%)	$134,700
				VSW EMT(08%)	$71,856
				S Pumphouse 2 Total	**$1,176,656**

Water Distribution Loop Upgrade					
Item	Activity	Unit	Unit Price	Quantity	Cost
1	Junction Box Materials+ Welding	LS	$6,000	30	$180,000
2	Core Crew (Supt, Plumber, Electrician)	LS	$1,100	30	$33,000
3	Local Force Account Crew	LS	$1,100	30	$33,000
4	Freight	LS	$500	30	$15,000
	*2013 dollars assuming force account construction / local wages			Subtotal	$261,000
				Contingency (20%)	$52,200
				Subtotal w/contingency	$313,200
				Design (8%)	$25,100
				Construction Management 15%	$47,000
				VSW EMT(8%)	$25,100
				Water Distribution Loop Upgrade Total	**$410,400**

Watering Points Upgrade (10 ea)					
Item	Activity	Unit	Unit Price	Quantity	Cost
1	Materials+ Welding	LS	$10,000	10	$100,000
2	Lineman	LS	$500	10	$5,000
3	Electrician	FT	$1,000	10	$10,000
4	Plumbing assembly	LS	$500	10	$5,000
5	Electrical and Controls	LS	$8,000	1	$8,000
6	Core Crew (Supt, Plumber, Electrician)	LS	$4,000	10	$40,000
7	Local Force Account Crew	LS	$4,000	1	$4,000
8	Freight	LS	$1,500	10	$15,000
	*2013 dollars assuming force account construction / local wages			Subtotal	$187,000
				Contingency (20%)	$37,400
				Subtotal w/contingency	$224,400
				Design (8%)	$18,000
				Construction Management (15%)	$33,700
				VSW EMT(8%)	$18,000
				10 Watering Points Total	**$294,100**

20,000 GAL Washeteria Water Storage Tank					
Item	Activity	Unit	Unit Price	Quantity	Cost
1	Foundation Pad + Thermosyphons	LS	$20,000	1	$20,000
2	20,000 Gal Insulated Horizontal Tank on Skid	LS	$45,000	1	$45,000
3	Connecting Piping	FT	$150	50	$7,500
4	Plumbing and Heat Exchanger	LS	$16,000	1	$16,000
5	Electrical and Controls	LS	$8,000	1	$8,000
6	Core Crew (Supt, Plumber, Electrician)	LS	$18,000	1	$18,000
7	Local Force Account Crew	LS	$25,000	1	$25,000
8	Freight	LS	$25,000	1	$25,000
	*2013 dollars assuming force account construction / local wages			Subtotal	$164,500
				Contingency (20%)	$32,900
				Subtotal w/contingency	$197,400
				Design (8%)	$15,800
				Construction Management (15%)	$29,600
				VSW EMT(8%)	$15,800
	20,000 GAL Washeteria Water Storage Tank Total				**$258,600**

Washeteria (Includes Water Distribution Mechanical and Waste Heat Recovery)					
Item	Activity	Unit	Unit Price	Quantity	Cost
1	Triodetic Foundation and	LS	$134,000	1	$134,000
2	Floor + Steps	LS	$30,000	1	$30,000
3	Structure Shell (SIP)	LS	$25,000	1	$25,000
4	Metal Siding and Roofing	LS	$16,000	1	$16,000
5	Doors	LS	$4,500	1	$4,500
6	Bathroom Accessories	LS	$5,000	1	$5,000
7	Plumbing fixtures	LS	$10,000	1	$10,000
8	Finishes	LS	$10,000	1	$10,000
9	Laundry Equipment	LS	$58,000	1	$58,000
10	Windows	LS	$2,500	1	$2,500
11	Waste Heat Recovery	LS	$30,000	1	$30,000
12	Mechanical	LS	$67,000	1	$67,000
13	Electrical	LS	$56,000	1	$56,000
14	Boardwalk to building	FT	$300	100	$30,000
15	Core Crew (Supt, Plumber, Electrician)	LS	$102,000	1	$102,000
16	Local Force Account Crew	LS	$135,000	1	$135,000
17	Construction Equipment Rental	LS	$80,000	1	$80,000
18	Freight	LS	$115,000	1	$115,000
	*2013 dollars assuming force account construction / local wages			Subtotal	$910,000
				Contingency (20%)	$182,000
				Subtotal w/contingency	$1,092,000
				Design (8%)	$87,400
				Construction Management (15%)	$163,800
				VSW EMT(8%)	$87,400
				Washeteria Total	**$1,430,600**

Honey Bucket Dump Station					
Item	Activity	Unit	Unit Price	Quantity	Cost
1	Materials for Dump Station, equipment, etc.	LS	$100,000	1	$100,000
2	Core Crew	LS	$28,000	1	$28,000
3	Local Force Account Crew	LS	$20,000	1	$20,000
4	Freight	LS	$30,000	1	$30,000
*2013 dollars assuming force account construction / local wages				Subtotal	$178,000
				Contingency (20%)	$35,600
				Subtotal w/contingency	$213,600
				Design (8%)	$17,100
	Construction Management (15%)				$32,000
				VSW EMT(8%)	$17,100
				Honey Bucket Dump Station Total	**$279,800**

Sewage Lagoon and Force Main					
Item	Activity	Unit	Unit Price	Quantity	Cost
1	Materials for Lagoon and force Main, equipment, etc.	LS	$800,000	1	$800,000
2	Core Crew	LS	$250,000	1	$250,000
3	Local Force Account Crew	LS	$300,000	1	$300,000
4	Freight	LS	$110,000	1	$110,000
2013 dollars assuming force account/local wages				Subtotal	$1,460,000
				Contingency (20%)	$292,000
				Subtotal w/contingency	$1,752,000
				Design (8%)	$140,200
				Construction Management (15%)	$262,800
				VSW EMT(8%)	$140,200
				Sewage Lagoon and Force Main Total	**$2,295,200**

Appendix D

Project Permits and Authorizations

PROJECT PERMITS AND AUTHORIZATIONS

Following National Environmental Policy Act guidelines, the project team has identified federal, state, and local agencies (referred to as "participating agencies") that have jurisdiction by law or special expertise related to the various environmental issues. Based on scoping activities and the Chefornak City Council's selected water and wastewater upgrade configuration, the following resource agencies (listed in the following Table) were identified as requiring permits for project-related activities. These agencies' input was solicited to assess the project's potential environmental impacts.

Agency	Permit Received	Scope Permitted	Date of Permit
Federal			
US Army Corps of Engineers	POA-2011-640-M1, Kinia River	Lagoon, Force Main	11/7/2012
US Army Corps of Engineers	POA-2011-640-M1, Kinia River, Modification #1	Revised lagoon configuration	Pending 15-day public notice
US Army Corps of Engineers	General Permit #2007-541	Washeteria, Tank, Pumphouse 1 and 2, 300 ft. Boardwalk	To be submitted in April 2014
US Fish and Wildlife Service	No likely adverse effect on Spectacled and Stellers' Eiders	Original lagoon confirmation	7/27/2011
US Fish and Wildlife Service	No likely adverse effect on Spectacled and Stellers' Eiders	Revised lagoon configuration,	12/13/2013
US Fish and Wildlife Service Office	Pending	Pumphouse 1and 2, Water Storage Tank, Washeteria, 300 ft. Boardwalk	3/12/2014
Federal Aviation Administration	Separation distance requirements met	Lagoon, Force Main	1/30/2014
State of Alaska			

ADEC, Division of Water	General Permit AKB-573000	Lagoon Discharge starting in 2015	Apply in 2015
Agency	Permit Received	Scope Permitted	Date of Permit
State of Alaska (Continued)			
ADNR, Office of History and Archaeology	"No historic properties affected"	Sewage Lagoon and force main	10/14/2011 3/30-2R DEC
ADNR, Office of History and Archaeology	No historic properties affected	Revised lagoon configuration	Affirmation of the original finding 12/17/2013
ADNR, Office of History and Archaeology	No action	Ground disturbing activities: Pumphouse 1 and 2, Boardwalk, Washeteria, tank.	Requested 3/17/2014
ADEC, Division of Water, Wastewater Discharge	Conditional Approval to Construct, Plan Tracking 8655	Excavation of lagoon footprint in April/May 2014; Force main pending.	3/4/2014 2015 approval pending final review
ADEC, Division of Water, Wastewater Discharge	Approval to Construct	Lift Stations and connections; sewage transfer station	Pending washeteria and transfer station design.
ADEC, Division of Water, Wastewater Discharge	Storm Water Pollution Prevention Permit	All ground disturbing activities	Submit NOI 7 days before construction.

ADEC, Division of Water, Wastewater Discharge	Dewatering Permit		In the event dewatering is needed.
ADPS Fire Marshal	To be requested	Pumphouse 1and 2, Washeteria, and Sewage Transfer Station	Request on completion of the component
ADEC, Drinking Water Program	To be requested	Washeteria, Tank, Pumphouse 1and 2	Request at 95% washeteria design
Agency	Permit Received	Scope Permitted	Date of Permit
State of Alaska (Continued)			
ADNR, Division of Coastal and Ocean Management	Coastal Questionnaire	Lagoon and force main	Submitted in 2011 prior to closure of the program.
Architectural Barriers Act	Plan Sets	All buildings to comply with the Americans with Disabilities Act.	Verify in development of plan sets.

US Army Corp of Engineers

Permit: CWA Section 404 (Wetlands) for Lagoon and Force Main Status: Issued in 2011, Revised and in public notice period.

Mitigation: None

Permit: General Permit # 2007-541– for Village Infrastructure Status: Apply on completion of plan sets affecting wetland.

US Fish and Wildlife Service

Finding: Not likely to adversely affect listed species.

Status: Issued finding letter on July 27, 2011.

Reaffirmed finding on December 13, 2013, and _____

Mitigation: None

Alaska Department of National Resources, State Historic Preservation Officer

Concurrence: No historic properties affected.

Status: Issued finding letter on October 14, 2011.

Reaffirmed finding on December 17, 2013.

Mitigation: None

Alaska Department of Environmental Conservation, Division of Water

Permit: Storm Water Pollutant Prevention Plan (SWPPP), Notice of Intent. Status: SWPPP will be submitted at least one week before construction.

Approval: Approval to construct under 18AAC72

Status: Approved for construction, all sheets needed for Season 1

Approval for Season 2 pending reviewer's completion

Approval: 18AAC72 review for remaining project elements

Status: Sewage pump station and other wastewater components will be submitted at the 95% stage.

Alaska Department of Environmental Conservation, Division of Water

Permit: Alaska Pollutant Discharge Elimination System for seasonal discharge of lagoon beginning in 2015.

Status: Application under a general permit for lagoon discharge.

Alaska Department of Public Safety, Division of Life and Fire Safety

Permit: Fire Marshall Code and Plan Review

Status: At 95% completion, the plan sets for the washeteria/water tank, the two pump houses, and the sewage transfer station will be submitted for review.

Alaska Department of Environmental Conservation, Division of Environmental Health

Approval: Approval to Construct under 18AAC80

Status: No approvals requested for remaining facilities subject to 18AAC80. At 95% completion, all components with potable water will be submitted for review.

Appendix E

Site Plans

Table of Contents

1.	**Pumphouse Repairs**	**Pages 2-4**
2.	**Washeteria and Water Tank**	**Pages 5-65**
3.	**Two Cell Lagoon**	**Pages 66-93**
4.	**Water Distribution Points & Watering Points**	**Pages 94-106**

CITY OF CHEFORNAK, ALASKA

2012 PUMP HOUSE REPAIRS

IN COOPERATION WITH STATE OF ALASKA
VILLAGE SAFE WATER AND THE CITY OF
CHEFORNAK, ALASKA

G:\ACAD\CHEFORNAK\2012 PUMP HOUSE REPAIRS\COVER.dwg, 8/20/2012 3:17:02 PM, cmerz, \\Ce2main\LANTER MP C2050\LD5200 PCL 6

95% ISSUED FOR REVIEW

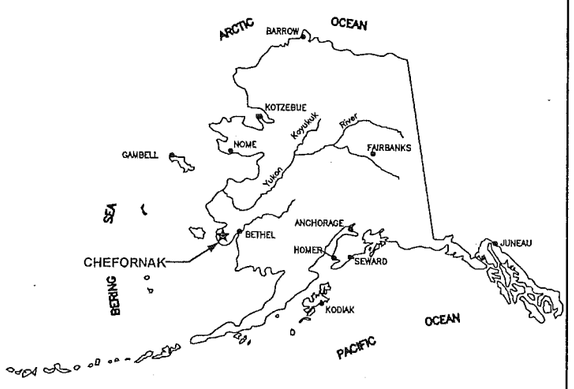

PROJECT LOCATION

Location Map

CE2 ENGINEERS, INC.

PO BOX 232946 ANCHORAGE, AK 99523 PH: 907-349-1010 FAX: 907-349-1015

STATE OF ALASKA 49TH PAUL C. WESNER CE-10276 REGISTERED PROFESSIONAL ENGINEER

Consultant

RECORD DRAWING CERTIFICATE

THESE DRAWINGS REFLECT RECORDED INFORMATION OBTAINED DURING CONSTRUCTION.
INFORMATION PROVIDED HEREIN IS ACCURATE TO THE BEST OF MY KNOWLEDGE.

NAME DATE

Construction Foreman –

FINAL DESIGN (Date) –

ADEC APPROVAL (Date)

Construction Period (From) – (To) –

As-Builts (Date)

SHEET INDEX

No.	Title
	COVER SHEET AND DRAWING INDEX
A1.1	PUMP HOUSE FOUNDATION AND FLOOR PLAN
A1.2	REPAIR DETAILS

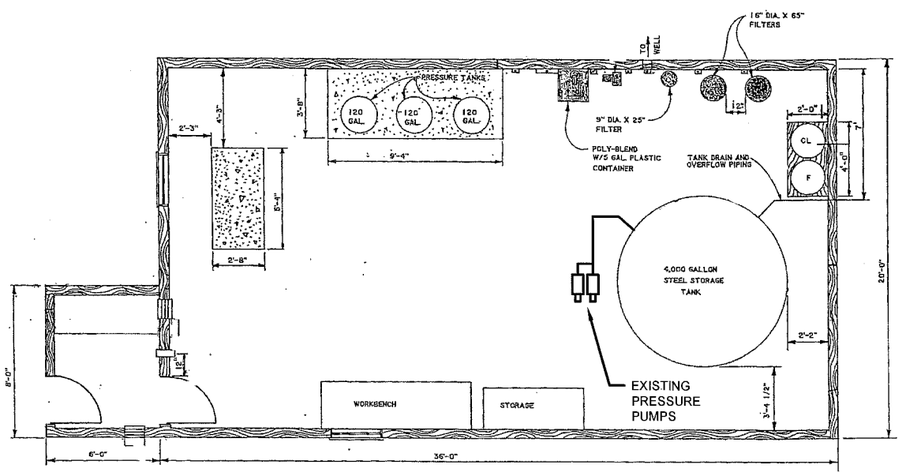

MECHANICAL FLOOR PLAN

1 A1.1 EXISTING FLOOR PLAN 1989
SCALE: 1/4" = 1'-0"

SCOPE OF WORK FOR THE WATER PLANT REPAIRS PROJECT

THE EXISTING 4,000 GAL WELDED STEEL WATER STORAGE TANK HAS BEEN LOCATED IN THE EAST END OF THE PUMP HOUSE FOR THIRTY YEARS. DURING THAT TIME, FILTER BACKWASH WATER UNDER THE BUILDING HAS CAUSED SETTLEMENT OF THREE KEY PILES UNDER THE TANK. SWEATING OF THE TANK HAS CAUSED ROT ON THE FLOOR. BOTH OF THESE SITUATIONS HAVE CAUSED THE POSSIBILITY OF FLOOR AND TANK FAILURE. TO PROVIDE A TEMPORARY REMEDY UNTIL THE NEW PUMP HOUSE IS CONSTRUCTED, IT IS PROPOSED THAT THE WATER TANK BE RELOCATED ON A REINFORCED FLOOR.

STEPS IN THE RELOCATION AND REPAIR PROJECT

1. ARRANGE WITH SCHOOL TO HAVE THEIR POTABLE WATER TANKS FULL SO THAT THEY DO NOT HAVE TO DRAW WATER FROM THE WELL AND WATER CIRCULATION SYSTEM.
2. SET UP A TEMPORARY PRESSURE PUMP AND TANK SYSTEM TO PROVIDE PRESSURIZED WATER TO THE EXISTING WATER DISTRIBUTION LOOP DURING THE TANK MOVE.
3. TAKE EXISTING PRESSURE PUMPS OUT OF SERVICE AND MOVE THEM AND THE DISCHARGE PIPING OUT OF THE WAY OF THE TANK MOVE.
4. REINFORCE FLOOR AS SHOWN IN DETAIL 3 THIS SHEET AND DETAIL B SHEET A1.2 WITH STEEL BEAMS WELDED TO EXISTING PILE.
5. REINFORCE FLOOR SURFACE WITH PLYWOOD AS SHOWN IN DETAIL 1 SHEET A1.2. LAY DOWN CONTAINMENT MEMBRANE BUT DO NOT BUILD RIM ASSEMBLY.
6. EMPTY WATER OUT OF THE TANK AND DISCONNECT ALL PIPING CONNECTIONS TO THE TANK. CLEAN OUT RUST, SEDIMENT, AND WIREBRUSH.
7. RELOCATE THE TANK TO THE NEW POSITION SHOWN IN DETAIL 2 THIS SHEET. USE LUMBER AND PIPE ROLLERS TO MOVE THE TANK.
8. CUT HOLES IN TANK FOR TANK OUTLET AND OVERFLOW PIPING. PLUG EXISTING PIPING PENETRATIONS AND USE FOAM INSULATION OR WOOD TO MAKE A SMOOTH SURFACE OVER THE PLUGS AND MANHOLE TO PREVENT CHAFING OF THE PVC LINER.
9. INSTALL NSF-COMPLIANT PVC TANK LINER INTO TANK. CUT HOLES FOR PENETRATIONS AND INSTALL SIDEWALL TANK FITTINGS.
10. INSTALL PVC PUMP SUCTION PIPING AND FITINGS TO THE NEW TANK. RELOCATE ORIGINAL PRESSURE PUMPS AND DISCHARGE MANIFOLD AND APPURTENANCES. INSTALL NEW PVC SUCTION MANIFOLD FOR THESE ORIGINAL PUMPS.
11. INSTALL PVC PIPING FROM WELL AND FILTERS TO TANK. FIT DISCHARGE INTO TOP OF TANK.
12. INSTALL EMERGENCY OVERFLOW PIPING INTO TANK, ROUTE PIPING TO EAST END OF BUILDING AND PENETRATE END WALL.
13. CONSTRUCT CONTAINMENT RIM AS SHOWN IN SECTION A SHEET A1.2.
14. DISINFECT TANK PER AWWA C652-11 METHOD 3 AS FOUND IN SECTION 4.3 OF THE STANDARD. DISCHARGE SUPERCHLORINATED WATER AFTER NEUTRALIZATION WITH SODIUM THIOSULFATE.
15. TAKE TWO BAC-T SAMPLES 30 MINUTES APART AND SEND TO YUKON-KUSKOKWIM HEALTH CORP. (YKHC) FOR TESTING. AFTER THE SUCCESSFUL BAC-T TESTS, THE TANK CAN BE RETURNED TO SERVICE.

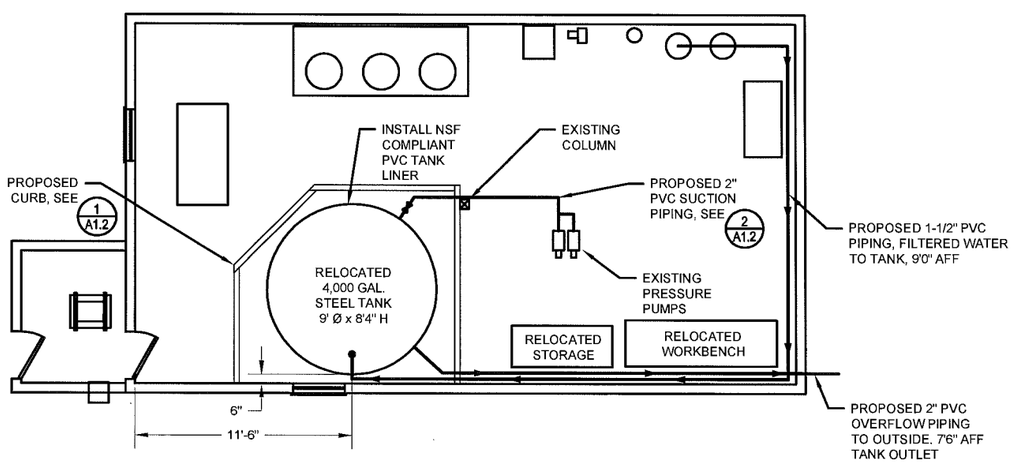

2 A1.1 PROPOSED FLOOR PLAN
SCALE: 1/4" = 1'-0"

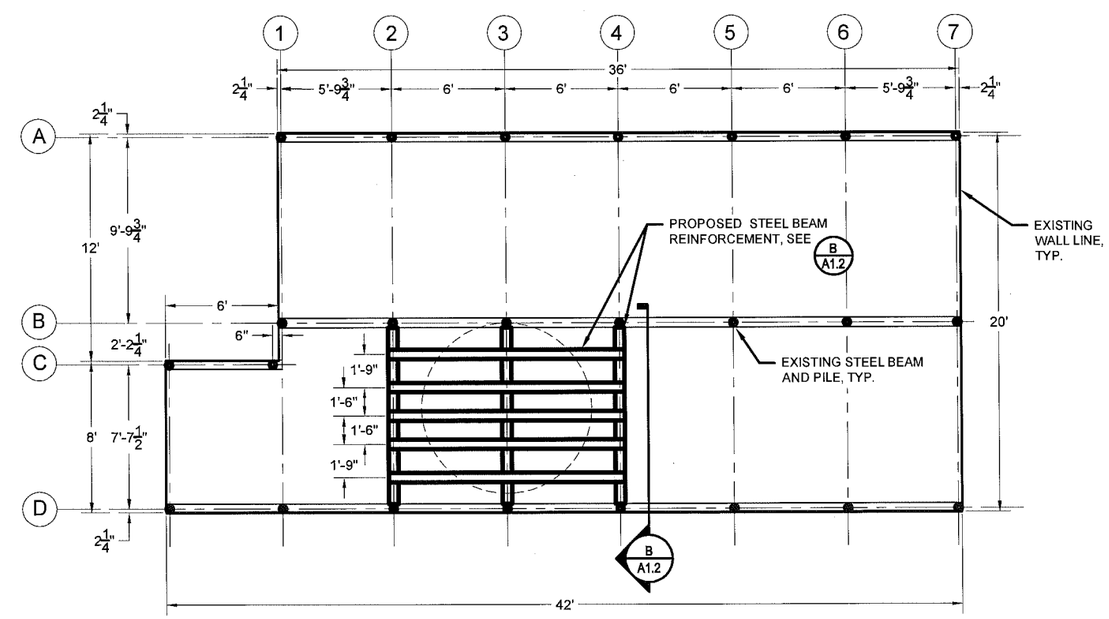

3 A1.1 EXISTING / PROPOSED FOUNDATION PLAN
SCALE: 1/4" = 1'-0"

RECORD DRAWING CERTIFICATE
THESE DRAWINGS REFLECT RECORDED INFORMATION OBTAINED DURING CONSTRUCTION. INFORMATION PROVIDED HEREIN IS ACCURATE TO THE BEST OF MY KNOWLEDGE.
NAME DATE

SCALE: AS SHOWN
BAR IS ONE INCH ON ORIGINAL DRAWING
0 1"
IF NOT ONE INCH ON THIS SHEET, ADJUST SCALES ACCORDINGLY

CONSTRUCTION RECORD
FIELD BOOK
STAKING
FOREMAN
AS-BUILT
INSPECTOR

STATE OF ALASKA 49TH
PAUL C. SCHMIDT
CE-10278
REGISTERED PROFESSIONAL ENGINEER

2012 PUMP HOUSE REPAIRS
PUMP HOUSE FOUNDATION & FLOOR PLAN
CHEFORNAK, ALASKA

CE2 ENGINEERS, INC.
PO BOX 223948 ANCHORAGE, AK 99523 PH: 907-349-1010 FAX: 907-349-1015

REVISION	BY	DATE

Project No.
Date AUG 2012
Designed PCW
Drawn LAW/CM
Approved PCW

Sheet No. A1.1
SHEET ___ OF ___

G:\ACAD\CHEFORNAK\2012 PUMP HOUSE REPAIRS\A1.1 FLOOR PLAN.dwg, 9/13/2012 3:26:01 PM, Flash, \\CE2MAIN\LANIER MP C2050/LD520C PCL 6

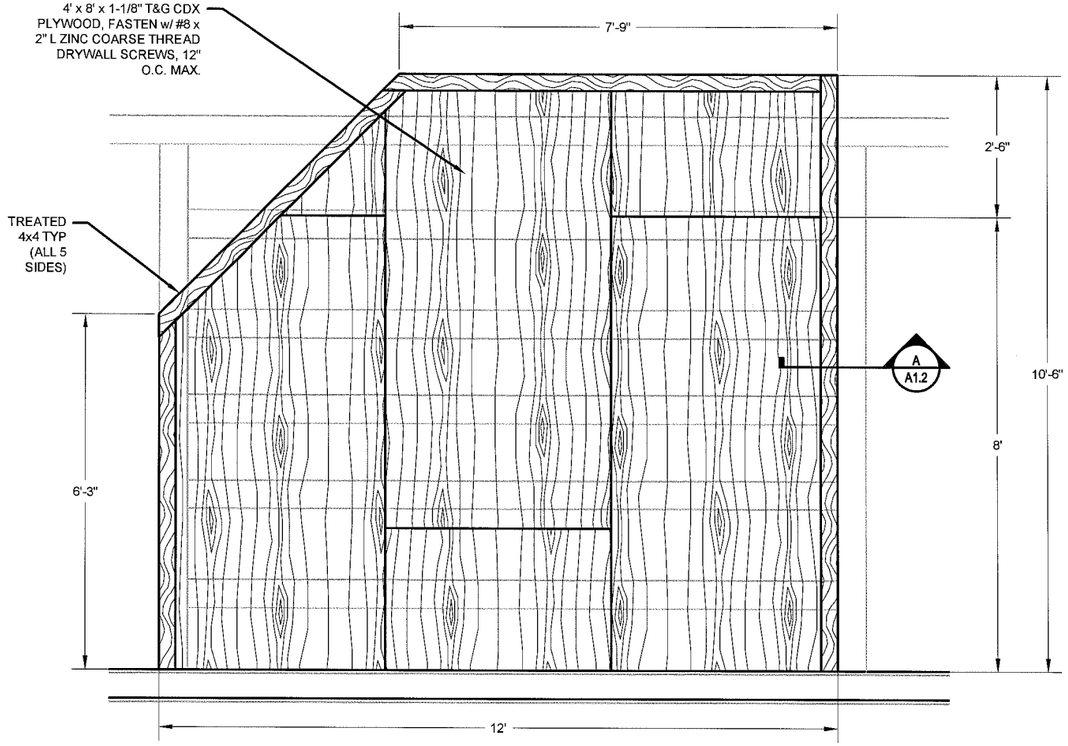

1 A1.2 PROPOSED FLOOR REINFORCEMENT
SCALE: 3/4" = 1'-0"

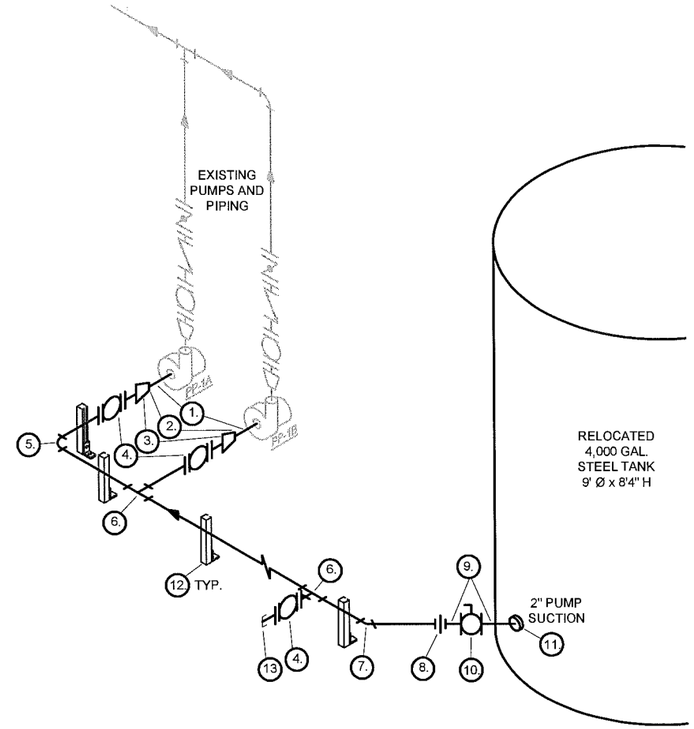

MATERIALS SCHEDULE

1. 1-1/4"x2-1/2" SCH 40 SS PIPE NIPPLE
2. 1-1/4" SS REINFORCED FEMALE ADAPTER, PVC SOCxSR FIPT, SPEARS #835-012SR
3. 2"x1-1/4" REDUCER COUPLING SOC, PVC SPEARS #829-250
4. 2" TRUE UNION BALL VALVE, VITON SEALS SOCxSOC SPEARS #2339-020
5. 2" PVC 90° EL SOC, SPEARS #806-020
6. 2" PVC TEE SOC, SPEARS #801-020
7. 2" PVC 45° EL, SOC SPEARS #817-020
8. 2" PVC UNION, VITON SEALS , SOCxFIPT SPEARS #859-020
9. 2"x3" L SCH 40 SS NIPPLE MxM
10. 2" BRASS BALL VALVE, FULL PORT, FxF, 600# WOG, RED-WHITE FIGURE 5544F-2" OR EQUAL
11. 2" TANK ADAPTER WITH NEOPRENE GASKET, SOCxF, SPEARS #871-020 OR EQUAL, 2" SUCTION ASSY BUILT FOR TANK w/ 2" PVC AND 2" 90° EL
12. PIPE SUPPORT BASE USING UNISTRUT: P1000T CHANNEL, P2942 POST BASE, 1/2"x1" BOLT, 1/2" SPRING NUT, P117 PIPE CLAMP FOR 2" NOM. PIPE, P2860-10 PLASTIC END CAP
13. 2" PVC SS REINFORCED FEMALE ADAPTOR, SPIG X F, SPEARS#878-020SR; 2" TYPE F CAMLOK ADAPTOR, M CAM X M, POLYPRO, PT COUPLINGS #2770620; 2" TYPE V DUST CAP, PT COUPLINGS #2771120

NOTE: ALL PVC PIPE AND FITTINGS SHALL BE SCHEDULE 80 WHERE APPLICABLE.

2 A1.2 PRESSURE PUMPS PROPOSED PIPING ISOMETRIC
SCALE: NTS

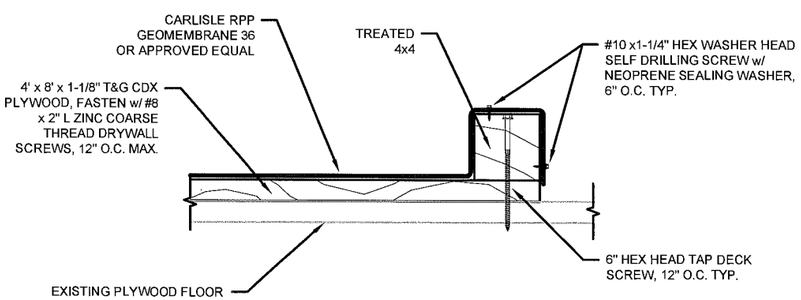

A A1.2 PROPOSED FLOOR CONTAINMENT AND RIM SECTION
SCALE: 3" = 1'-0"

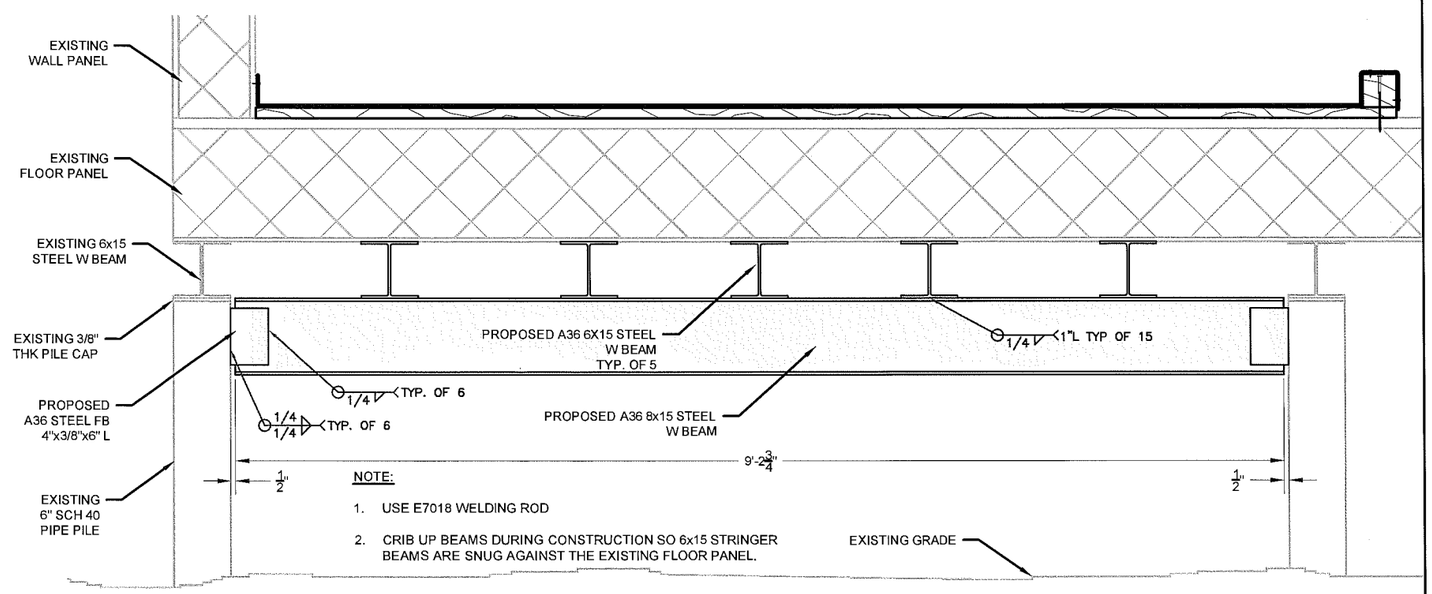

NOTE:

1. USE E7018 WELDING ROD
2. CRIB UP BEAMS DURING CONSTRUCTION SO 6x15 STRINGER BEAMS ARE SNUG AGAINST THE EXISTING FLOOR PANEL.

B A1.2 PROPOSED STEEL BEAM REINFORCEMENT
SCALE: 1-1/2" = 1'-0"

RECORD DRAWING CERTIFICATE
THESE DRAWINGS REFLECT RECORDED INFORMATION OBTAINED DURING CONSTRUCTION. INFORMATION PROVIDED HEREIN IS ACCURATE TO THE BEST OF MY KNOWLEDGE.
NAME DATE

SCALE: AS SHOWN
BAR IS 1INCH ON ORIGINAL DRAWING 0 1"
IF NOT ONE INCH ON THIS SHEET, ADJUST SCALES ACCORDINGLY

CONSTRUCTION RECORD
FIELD BOOK
STAKING
FOREMAN
AS-BUILT
INSPECTOR

STATE OF ALASKA 49TH PAUL G. BRUNER CE-10279 REGISTERED PROFESSIONAL ENGINEER

2012 PUMP HOUSE REPAIRS
REPAIR DETAILS
CHEFORNAK, ALASKA

CE2 ENGINEERS, INC.
PO BOX 223948 ANCHORAGE, AK 99523 PH: 907-349-1010 FAX: 907-349-1015

REVISION	BY	DATE

Project No. ____ Date AUG 2012
Designed POW
Drawn LAW/CM
Approved POW

Sheet No. A1.2
SHEET ____ OF ____

G:\ACAD\CHEFORNAK\2012 PUMP HOUSE REPAIRS\A1.2 DETAILS.dwg, 9/13/2012 3:42:12 PM, Flash, \\CE2MAIN\LANIER MP C2050/LD520C PCL 6

CITY OF CHEFORNAK, ALASKA

WASHETERIA AND WATER TANK

IN COOPERATION WITH STATE OF ALASKA
VILLAGE SAFE WATER AND THE CITY OF
CHEFORNAK, ALASKA

JUNE 2014 - 95% ISSUED FOR AGENCY APPROVAL

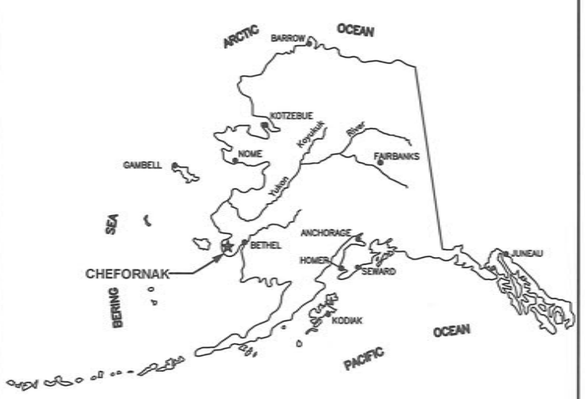

PROJECT LOCATION

Location Map

CE2 ENGINEERS, INC.
PO BOX 232946 ANCHORAGE, AK 99523 PH: 907-349-1010 FAX: 907-349-1015

STATE OF ALASKA 49TH PAUL C. WESNER CE-10276 REGISTERED PROFESSIONAL ENGINEER
6-26-2014

Consultant

RECORD DRAWING CERTIFICATE

THESE DRAWINGS REFLECT RECORDED INFORMATION OBTAINED DURING CONSTRUCTION.
INFORMATION PROVIDED HEREIN IS ACCURATE TO THE BEST OF MY KNOWLEDGE.

NAME DATE

Construction Foreman –

FINAL DESIGN (Date) –

ADEC APPROVAL (Date)

Construction Period (From) – (To) –

As-Builts (Date)

SHEET INDEX

No.	Title
GENERAL	
G1.0	COVER SHEET AND SHEET INDEX
G2.0	VICINITY MAP
G2.1	PROJECT AREA
G3.0	SYSTEM SCHEMATIC AND DESIGN CRITERIA
G4.0	GENERAL NOTES AND LEGEND
G5.0	GEOTECHNICAL INFORMATION
CIVIL	
C1.0	SURVEY CONTROL
C2.0	PROJECT SITE PLAN
C3.0	PAD CONSTRUCTION
C4.1	WATER TANK PLAN, ELEVATIONS AND DETAILS
C4.2	WATER TANK DETAILS
C5.1	LIFT STATION DETAILS
C5.2	LIFT STATION
C5.3	LIFT STATION TANK
C6.1	UTILIDOR / PIPE SUPPORT DETAILS
C6.2	FORCE MAIN PIPE DETAILS
C6.3	UTILIDOR DETAILS
C6.4	CONNECTION BOX DETAILS
C6.5	UTILIDOR PIPE ANCHORING DETAILS
C6.6	ARCTIC PIPE DETAILS
C6.7	UTILIDOR CONNECTION BRACKET DETAILS
ARCHITECTURAL	
A1.1	WASHETERIA FLOOR PLAN
A1.2	WASHETERIA ENLARGED FLOOR PLANS
A1.3	WASHETERIA ROOF PLAN, INT. ELEVATIONS
A2.1	WASHETERIA EXTERIOR ELEVATIONS
A3.1	WASHETERIA BUILDING SECTIONS
A3.2	WASHETERIA WALL SECTIONS
A3.3	WASHETERIA WALL SECTIONS
STRUCTURAL	
S0.1	STRUCTURAL NOTES
S1.1	WASHETERIA FOUNDATION PLAN
S2.1	WASHETERIA FLOOR FRAMING PLAN
S2.2	WASHETERIA RAMP / EXT. STAIR FRAMING PLAN
S3.1	WASHETERIA ROOF FRAMING PLAN
S4.1	WASHETERIA BUILDING SECTIONS
S4.2	WASHETERIA WALL SECTIONS
MECHANICAL	
M1.0	LEGEND, DRAWING LIST AND MECH/PLUM'G OVERVIEW
M1.1	EQUIPMENT LIST
M1.2	EQUIPMENT LIST
M1.3	PLUMBING FIXTURES, MATERIALS AND NOTES
M1.4	PIPING AND GENERAL MATERIALS
M1.5	CONTROLS AND SEQUENCE OF OPERATION
M1.6	CONTROL DIAGRAMS
M1.7	BOILER CONTROL DIAGRAM
M1.8	UNIT HEATER CONTROLS
M1.9	CONTROL DIAGRAMS
M2.0	UNDER FLOOR PLUMBING PLAN
M2.1	PLUMBING PLAN
M2.5	PLUMBING DIAGRAMS AND DETAILS
M3.0	MECHANICAL PLAN – PIPING
M3.1	MECHANICAL PLAN – HVAC
M3.5	HVAC AND HEATING DETAILS
M3.6	MECHANICAL DETAILS
M4.0	HEATING AND WATER SUPPLY DIAGRAM
M4.1	POWER PLANT HEAT RECOVERY PIPING
ELECTRICAL	
E1.1	ELECTRICAL LEGEND AND GENERAL REQUIREMENTS
E2.1	ELECTRICAL SITE PLAN
E3.1	ELECTRICAL LIGHTING PLAN
E4.1	ELECTRICAL POWER PLAN
E4.2	ELECTRICAL POWER PLAN
E5.1	ELECTRICAL DIAGRAMS AND DETAILS
E5.2	ELECTRICAL DIAGRAMS AND DETAILS

G:\ACAD\CHEFORNAK\2013 Washeteria and Water Tank\COVER.dwg, 6/26/2014 12:25:31 PM, cmerz, \\Ce2main\LANIER MP C2050\LD520C PCL 6

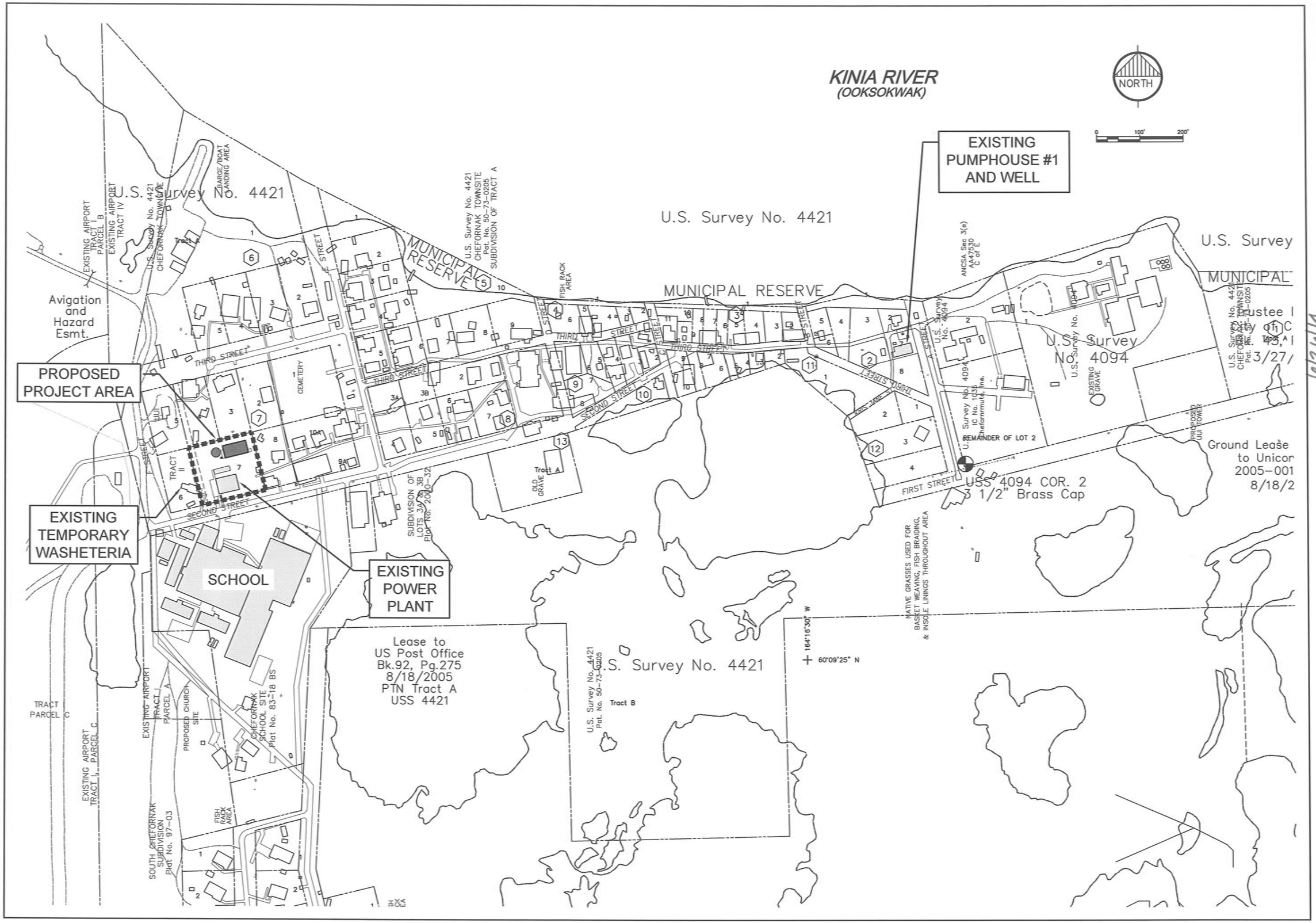

RECORD DRAWING CERTIFICATE
THESE DRAWINGS REFLECT RECORDED INFORMATION OBTAINED DURING CONSTRUCTION. INFORMATION PROVIDED HEREIN IS ACCURATE TO THE BEST OF MY KNOWLEDGE.
NAME DATE

SCALE: AS SHOWN
BARS 1 ONE INCH ON ORIGINAL DRAWING 0 1"
IF NOT ONE INCH ON THIS SHEET, ADJUST SCALES ACCORDINGLY

CONSTRUCTION RECORD
FIELD BOOK
STAKING
FOREMAN
AS-BUILT
INSPECTOR

STATE OF ALASKA 49TH PAUL C. WEBER CE-10276 REGISTERED PROFESSIONAL ENGINEER

6/26/14

WASHETERIA AND WATER TANK
VICINITY MAP
CHEFORNAK, ALASKA

CE2 ENGINEERS, INC.
PO BOX 232948 ANCHORAGE, AK 99523 PH: 907-349-1019 FAX: 907-349-1015

REVISION	BY	DATE

Project No. ____
Date MAR. 2014
Designed ____
Drawn CM
Approved PGW

Sheet No. G2.0
SHEET ____ OF ____

G:\ACAD\CHEFORNAK\2013 Washeteria and Water Tank\G2.0 Vicinity Map.dwg, 6/25/2014 2:25:43 PM, cmerz, \\Ce2main\LANIER MP C2050/LD520C PCL 6

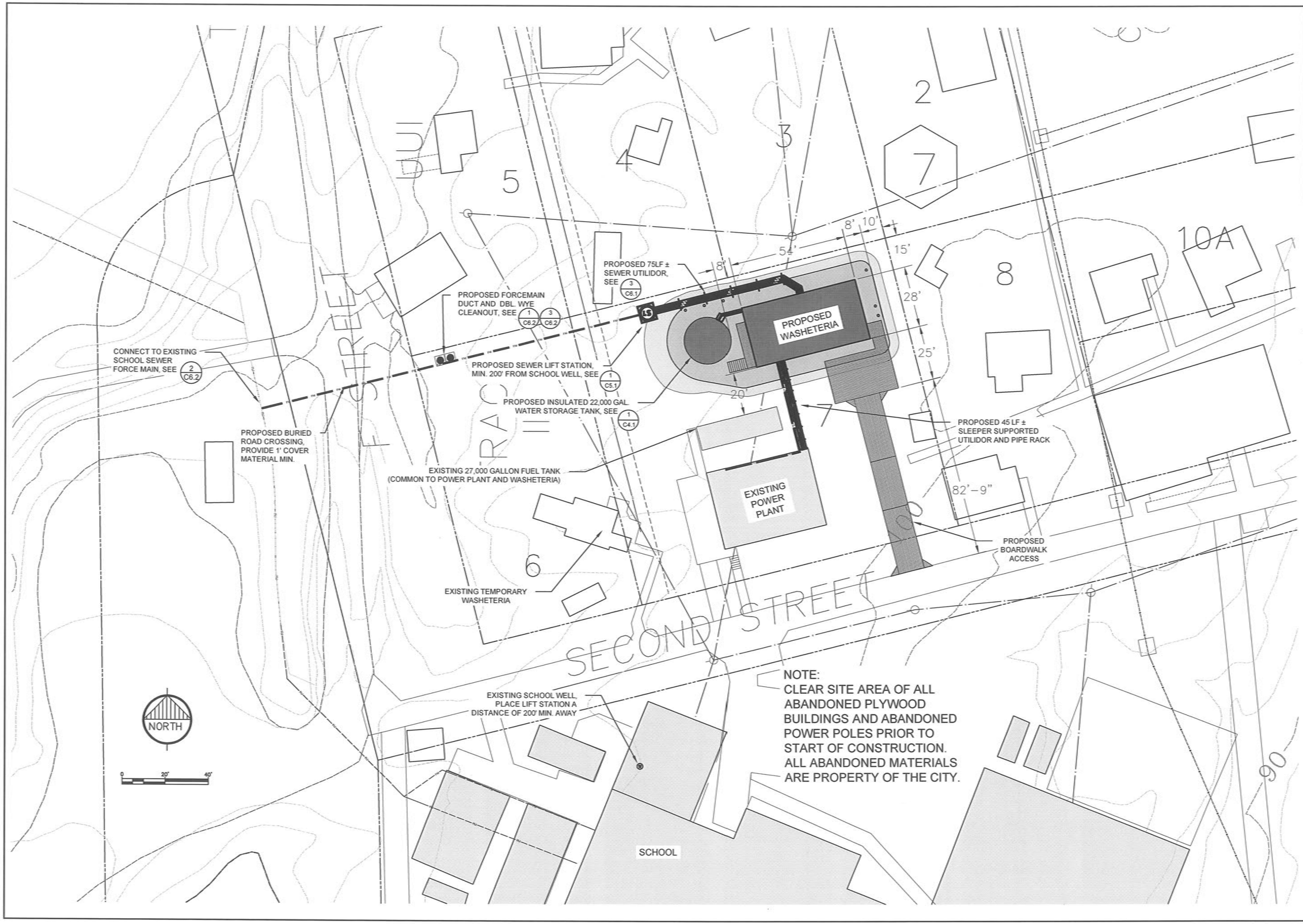

NOTE:
CLEAR SITE AREA OF ALL ABANDONED PLYWOOD BUILDINGS AND ABANDONED POWER POLES PRIOR TO START OF CONSTRUCTION. ALL ABANDONED MATERIALS ARE PROPERTY OF THE CITY.

RECORD DRAWING CERTIFICATE
THESE DRAWINGS REFLECT RECORDED INFORMATION OBTAINED DURING CONSTRUCTION. INFORMATION PROVIDED HEREIN IS ACCURATE TO THE BEST OF MY KNOWLEDGE.
NAME DATE

SCALE: AS SHOWN
BAR IS ONE INCH ON ORIGINAL DRAWING 0 1"
IF NOT ONE INCH ON THIS SHEET, ADJUST SCALES ACCORDINGLY

CONSTRUCTION RECORD
FIELD BOOK
STAKING
FOREMAN
AS-BUILT
INSPECTOR

6/26/14

STATE OF ALASKA 49TH PAUL C. WEBER CE-10276 REGISTERED PROFESSIONAL ENGINEER

WASHETERIA AND WATER TANK
PROJECT AREA
CHEFORNAK, ALASKA

CE2 ENGINEERS, INC.
PO BOX 232948 ANCHORAGE, AK 99523 PH: 907-349-1015 FAX: 907-349-1015

REVISION	BY	DATE

Project No. ____
Date MAR. 2014
Designed PCW
Drawn CM
Approved PCW

Sheet No. G2.1
SHEET ____ OF ____

G:\ACAD\CHEFORNAK\2013 Washeteria and Water Tank\G2.1 PROJECT AREA.dwg, 6/25/2014 2:25:22 PM, cmerz, \\Ce2main\LANIER MP C2050/LD520C PCL 6

PROJECT SCOPE

- CONSTRUCT A 1,512 SQUARE FOOT WASHETERIA BUILDING, WHICH INCLUDES LAUNDRY FACILITIES, TWO RESTROOMS, UTILITY OFFICE AND MECHANICAL ROOM.
- WASHETERIA IS TO BE INSTALLED ON A TRIODETIC FOUNDATION FRAME.
- WORK WILL INCLUDE ACCESS BOARDWALK AND A HANDICAP ACCESSIBLE RAMP.
- CONSTRUCTION OF WASHETERIA, WATER STORAGE TANK, LIFT STATION AND FORCE MAIN SCHEDULED TO BE CONSTRUCTED IN 2014.

PROJECT DESIGN CRITERIA

- DESIGN POPULATION (2033): 532 PERSONS
- AVERAGE WATER DEMAND (2033): 2,000 GAL/DAY
- FINISH FLOOR ABOVE FLOOD HIGH WATER ELEVATION.
- PUBLIC FACILITY DESIGNED TO BE ADA ACCESSIBLE.
- ADJACENT BOARDWALK WILL BE WIDENED TO PROVIDE WASHETERIA PARKING.
- POWER IS SUPPLIED FROM CITY'S 3-PHASE 480V PLANT POWER. IT WILL BE STEPPED DOWN TO 208/120V IN THE WASHETERIA.
- BOILERS AND RECOVERED WASTE HEAT FROM THE CITY POWER PLANT WILL PROVIDE HEAT.
- DRYERS WILL OPERATE BY HOT GLYCOL AND UTILIZE A TWO STAGE ENGINEERED COIL.
- FUEL FOR THE BOILERS IS SUPPLIED TO A DAY TANK SUPPLIED FROM THE POWER PLANT 27,000 GALLON TANK AND THE FUEL USE WILL BE METERED.
- A WASHETERIA EMERGENCY HEATER WILL BE POWERED BY A UPS (BATTERY BACK-UP SYSTEM).
- A HYDRONICALLY HEATED WATER HEATER WILL PROVIDE HOT WATER TO THE WASHERS, BATHROOMS, AND SHOWERS.
- WASHERS, DRYERS AND SHOWERS ARE TOKEN-OPERATED .
- WASTE WILL BE DISCHARGED BY GRAVITY FROM WASHETERIA TO PUMP STATION, THEN PUMPED THROUGH A FORCE MAIN TO THE EXISTING WASTEWATER LAGOON THRU SCHOOL FORCE MAIN UNTILL NEW LAGOON IS ONLINE IN 2015.

LEGEND

S	SEWER LINE
FM	FORCE MAIN
E	ELECTRIC
W	WATER
DHW	DOMESTIC HOT WATER
DCW	DOMESTIC COLD WATER
G	GLYCOL
F	FUEL LINE
D	DRYER
H.E.	HEAT EXCHANGER
L.S.	LIFT STATION
P.T.	PRESSURE TANK
P.P.	PRESSURE PUMP
P.T.	PRESSURE TANK
W	WASHER
W.H.	WATER HEATER

NOTE:
SCHEMATIC ONLY - EQUIPMENT LOCATIONS MAY VARY. SEE SHEETS M2.0, M3.0 AND M4.0 FOR MORE DETAILED PLUMBING PLAN, MECHANICAL EQUIPMENT LAYOUT AND HEATING / WATER SUPPLY DIAGRAMS

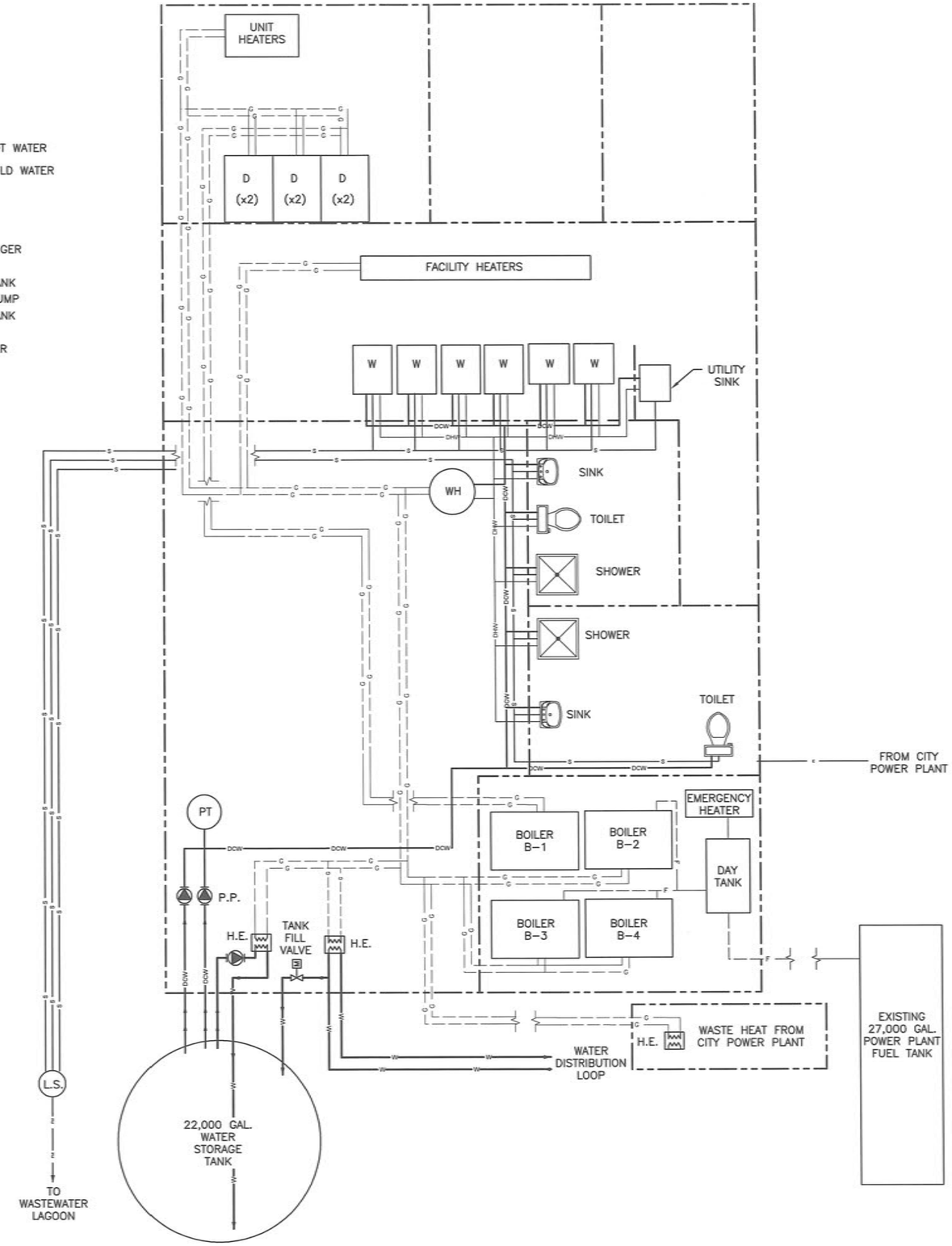

DAILY WASHETERIA WATER CONSUMPTION FOR DESIGN

Item	Consumption Rate	Water Consumption
30-lb washer/extractors (4 ea)	31 loads/day @ 44 gallons/load	1400 gallons
18-lb washers (2 ea)	20 loads/day@ 22 gallons/load	500 gallons
Toilets (2 ea)	30 flushes/day @ 1.6 gallons/flush	200 gallons
Showers (2 ea)	20 showers/day @ 25 gallons/shower	500 gallons
Lavatory (2 ea)	50 gallons/day	50 gallons
Utility sinks (2 ea)	30 gallons/day	30 gallons
	Total estimated daily water consumption	2680 gallons per day
	Engineering design consideration	3000 gallons per day

RECORD DRAWING CERTIFICATE
THESE DRAWINGS REFLECT RECORDED INFORMATION OBTAINED DURING CONSTRUCTION. INFORMATION PROVIDED HEREIN IS ACCURATE TO THE BEST OF MY KNOWLEDGE.
NAME DATE

SCALE: AS SHOWN
BARS ON ONE INCH ON ORIGINAL DRAWING 0 1"
IF NOT ONE INCH ON THIS SHEET, ADJUST SCALES ACCORDINGLY

CONSTRUCTION RECORD
FIELD BOOK
STAKING
FOREMAN
AS-BUILT
INSPECTOR

STATE OF ALASKA 49TH PAUL C. WEBER CE-10276 REGISTERED PROFESSIONAL ENGINEER
6/26/14

WASHETERIA AND WATER TANK
SYSTEM SCHEMATIC AND DESIGN CRITERIA
CHEFORNAK, ALASKA

CE2 ENGINEERS, INC.
PO BOX 220946 ANCHORAGE, AK 99522 PH: 907-349-1010 FAX: 907-349-1015

REVISION	BY	DATE

Project No. ____ Date MAR. 2014 Designed PCW Drawn CM Approved PCW

Sheet No. G3.0
SHEET ____ OF ____

G:\ACAD\CHEFORNAK\2013 Washeteria and Water Tank\G3.0 Schematic and Design Criteria.dwg, 6/25/2014 2:24:28 PM, cmerz, \\Ce2main\LANIER MP C2050/LD520C PCL 6

GENERAL NOTES

1. ALL CONSTRUCTION SHALL BE DONE IN A SAFE WORKMANLIKE MANNER TO INDUSTRY STANDARDS AND IN CONFORMANCE WITH APPLICABLE LOCAL STATE AND FEDERAL CODES AND REGULATIONS. HIGH STANDARDS OF WORKMANSHIP SHOWING A SENSE OF PRIDE BY WORKMEN SHALL BE MAINTAINED. WORKERS SHALL BE PREPARED TO SIGN THEIR INDIVIDUAL WORK AS IF IT WAS THEIR OWN ARTWORK.
2. ALL MATERIALS SHALL MEET OR EXCEED THE MINIMUM QUALITY STANDARDS SPECIFIED IN THE DRAWINGS. ANY MATERIAL IN CONTACT WITH THE WELL WATER OR POTABLE WATER SHALL BE NSF 61 APPROVED. SOLDER CONTAINING LEAD SHALL NOT BE ALLOWED.
3. THE BASIS OF VERTICAL CONTROL IS THE 3" BLM BRASS CAP OF USS 4412, TR-A, CORNER 11, BLOCK 6, AS SHOWN ON SURVEY CONTROL SHEET C1.0 AS POINT INDENTIFIER 616. THE ELEVATION OF THE TOP OF CAP IS 77.68 FT.
4. THE BASIS OF HORIZONTAL CONTROL IS THE BEARING BETWEEN POINT INDENTIFIER 600 AND POINT IDENTIFIER 616 AS SHOWN ON SURVEY CONTROL SHEET C1.0. THE BEARING IS NORTH 7° 14' 42" E WITH A LENGTH OF 2988.5 FEET.
5. EXISTING UTILITIES ARE SHOWN IN APPROXIMATE LOCATION TO THE BEST KNOWLEDGE OF THE ENGINEER AT THE TIME OF DESIGN. UTILITY RECORDS MAY NOT BE COMPLETELY ACCURATE. THE PROJECT SUPERINTENDENT SHALL VERIFY HORIZONTAL AND VERTICAL LOCATION OF UTILITIES WITHIN EACH CONSTRUCTION REACH PRIOR TO CONSTRUCTION. ALL UTILITIES ARE ABOVE GROUND UNLESS OTHERWISE NOTED.

WATER AND SEWER -	CHEFORNAK WATER AND SEWER UTILITY	(907) 867-8301
ELECTRIC -	NATERKAQ LIGHT PLANT	(907) 867-8213
TELEPHONE -	UNITED UTILITIES, INC.	(800) 478-2020

6. THE PROJECT SUPERINTENDENT SHALL BE RESPONSIBLE FOR MAINTAINING A CLEAN SET OF AS-BUILT "RED LINE" RECORD DRAWINGS SHOWING LOCATION AND SWING TIES TO ALL BURIED SYSTEM COMPONENTS. ALL ELEVATIONS SHALL BE MARKED ASB (AS-BUILT) OR F.C. (FIELD CHANGED) WITH THE CORRECT VALUE INSERTED. DRAWINGS SHALL BE KEPT CURRENT IN RED PENCIL AND UPDATED DAILY IN A NEAT AND LEGIBLE FASHION. A COPY OF THE AS-BUILT DRAWINGS SHALL BE SUBMITTED TO THE CITY OF CHEFORNAK AND THE VILLAGE SAFE WATER PROJECT ENGINEER.
7. GENERAL RESTORATION - THE AREAS IMPACTED BY CONSTRUCTION SHALL BE RETURNED TO PRECONSTRUCTION CONDITION OR BETTER. CONSTRUCTION DEBRIS SHALL BE REMOVED FROM THE AREA AND DISPOSED OF IN A PROPER MANNER. DUE CARE AND CAUTION SHALL BE TAKEN TO AVOID DISTURBING PERSONAL PROPERTY.
8. CONSTRUCTION IN SENSITIVE AREAS - TIMBER MATS OR PADS SHALL BE USED TO PROTECT VEGETATIVE COVER DURING CONSTRUCTION. ANY DAMAGE CAUSED BY CONSTRUCTION ACTIVITIES SHALL BE REPAIRED OR RESEEDED AS NECESSARY TO RETURN THE AREAS AFFECTED BY CONSTRUCTION TO ITS PRECONSTRUCTION STATE.
9. THE CONSTRUCTION SITE SHALL BE ADEQUATELY PROTECTED, RESTRICTED AND BARRICADED IN THE BEST PUBLIC INTERESTS OF HEALTH, SAFETY AND WELFARE, WITH VISIBLE AND STABLE BARRIERS, UNDERSTANDABLE, LARGE-PRINT WARNING SIGNS, AND OTHER PRECAUTIONARY EQUIPMENT AND MEASURES AS REQUIRED. ALL SAFETY MEASURES SHALL BE IN CONFORMANCE WITH APPLICABLE STATE OF ALASKA DOT AND OSHA SAFETY REQUIREMENTS.
10. EXISTING BOARDWALK SHALL BE REMOVED ONLY WHERE INDICATED ON THE PLANS AND IN ALL AREAS WHERE THE EXISTING BOARDWALK CONFLICTS WITH THE PROPOSED BOARDWALK ALIGNMENT. REMOVED BOARDWALK MATERIAL WITH ANY SALVAGE VALUE SHALL BE CLEANED OF FASTENERS (NAILS, SCREWS, PLATES, ETC.) AND NEATLY STACKED AT A LOCATION DESIGNATED BY THE CITY. PROVIDE STICKERS BETWEEN EVERY THIRD ROW IN THE STACK. EXISTING BOARDWALK MATERIAL WITH NO SALVAGE VALUE SHALL BE DISPOSED OF AT THE LANDFILL.

GENERAL DESIGN CRITERIA:

DESIGN TEMPERATURE:	13,200 HEATING DEGREE DAYS
LOOP WATER TEMPERATURE	40°F ± 2°F
HEATING LOADS:	
BUILDING	50,000 Btu-HR
DOMESTIC WATER	50,000 Btu-HR
DRYERS	(6) @ 60,000 Btu-HR
WASHERS	(SEE MECHANICAL)
AIR CHANGES	4 / HOUR

WATERLINES / WATER TANK:

1. TESTING - ALL TESTING SHALL BE IN CONFORMANCE WITH THE FOLLOWING REQUIREMENTS.
   A. PLUMBING TESTING - PERFORM A TEST OF WATERLINES. ALL POTABLE WATER PIPING MUST BE PRESSURIZED TO 90 PSI WITH WATER AND LEFT FOR 1 HOUR. AFTER THE INITIAL STABILIZATION PERIOD WITH NO LOSS IN PRESSURE.
   B. ALL TESTS SHALL BE WITNESSED BY A REPRESENTATIVE DESIGNATED BY THE OWNER (CITY OF CHEFORNAK). UPON SUCCESSFUL COMPLETION OF A TEST THE RESULTS OF THE TEST SHALL BE DOCUMENTED ON A TEST FORM AND ACKNOWLEDGED BY SIGNATURE OF THE OWNER'S REPRESENTATIVE WITNESSING THE TEST AND BY THE PROJECT SUPERINTENDENT. THE SUPERINTENDENT'S RED LINED AS-BUILT DRAWINGS SHALL ALSO NOTE, FOR EACH SEGMENT OF THE SYSTEM TESTED, THE TIME AND DATE OF THE TEST AND THE NAME OF THE OWNER'S WITNESS. COPIES OF THIS TEST SHALL BE SENT TO VSW ENGINEER.
   C. THE CONSTRUCTION MANAGER WILL SUBMIT A QA/QC MANUAL OF ALL TESTING FOR REVIEW.
2. WATER PIPING SHALL BE BUTT FUSED, HDPE SDR 11 (PE 3408), ROUTED THROUGH AN INSULATED ARCTIC PIPE DUCT. THE DUCT SHALL HAVE A 4"Ø HDPE, SDR 17 CORE PIPE, 3" MINIMUM OF 3-4 LB/CF POLYURETHANE FOAM AND AN 12"ØX16 GAUGE CORRUGATED ALUMINUM JACKET.
3. DISINFECTION - ALL WATERLINES AND WATER TANKS TO BE DISINFECTED AND TESTED FOR COLIFORM IN ACCORDANCE WITH AWWA C651/3.

BOARDWALK:

1. ALL BOARDWALK MATERIALS SHALL BE AS SPECIFIED IN THE DRAWINGS AND MEET THE FOLLOWING REQUIREMENTS:
   A. LUMBER: HEMLOCK AND DOUGLAS FIR (HEM-FIR) GRADE #2 OR BETTER. ALL SIZES ARE GIVEN IN NOMINAL DIMENSIONS (I.E., 4X12 WILL MEASURE 3 1/2" THICK BY 11 1/2" WIDE).
   B. WOOD TREATMENT: ALL WOOD MATERIALS USED SHALL BE TREATED WITH THE WOOD PRESERVATIVE CROMATED COPPER ARSENATE (CCA) AT THE FOLLOWING CONCENTRATIONS:
      "SOIL CONTACT" (INCLUDES ALL SLEEPERS) - 0.6 POUNDS PER CUBIC FOOT
      ABOVE GROUND (>6" ABOVE GROUND) - 0.4 POUNDS PER CUBIC FOOT

GENERAL STRUCTURAL NOTES

1. UNLESS NOTED OTHERWISE, ALL CONSTRUCTION SHALL CONFORM TO AASHTO STANDARD SPECIFICATIONS FOR HIGHWAY BRIDGES. IN ADDITION TO DEAD LOADS, THE BOARDWALK WAS DESIGNED FOR THE LIVE AND ENVIRONMENTAL LOADS AS SHOWN ON THE STRUCTURAL GENERAL NOTES, SHEET S0.1

BOARDWALK FOUNDATION

2. A FOUNDATION INVESTIGATION WAS PREPARED FOR A PREVIOUS PROJECT BY DUANE MILLER AND ASSOCIATES. SOILS IN THE AREA GENERALLY CONSIST OF A PUMICE BOLDER MATRIX WITH A THIN ORGANIC MAT OVERLAYING SILT. MARGINAL TEMPERATURE PERMAFROST AS WELL AS THAWED SOIL CONDITIONS EXIST IN THE PROJECT AREA.

3. LUMBER SHALL BE HEM-FIR, GRADE NO. 2 OR BETTER. ALL WOOD MEMBERS SHALL BE TREATED WITH THE WOOD PRESERVATIVE CCA, CROMATED COPPER ARSENATE, WITH THE FOLLOWING CONCENTRATIONS:
   Soil Contact - 0.6 pounds per cubic foot
   Above Grade - 0.4 pounds per cubic foot

4. STEEL HARDWARE AND FASTENERS, INCLUDING STRUCTURAL PLATES, SHAPES, BARS, AND ASSEMBLIES, SHALL BE GALVANIZED IN ACCORDANCE WITH THE REQUIREMENTS OF ASTM A-123. BOLTS, NUTS AND SIMILAR THREADED FASTENERS SHALL BE GALVANIZED IN ACCORDANCE WITH ASTM A-153. SURFACES SHALL BE THOROUGHLY CLEANED OF RUST AND SCALE PRIOR TO GALVANIZING. FIELD REPAIRS TO GALVANIZING SHALL BE MADE USING "GALVINOX", GALVO-WELD", OR EQUAL.

PIPING (GENERAL):

1. ALL PIPING AND FITTINGS SHALL BE NSF-61 COMPLIANT WHERE SUCH PIPING AND FITTINGS ARE IN CONTACT WITH RAW OR POTABLE WATER IN THE WATER TREATMENT OR DISTRIBUTION PROCESS.
2. ALL PIPING SHALL BE LEAD FREE.
3. ALL PLUMBING USING SOLDERED JOINTS SHALL USE A SOLDER CERTIFIED TO NOT TO CONTAIN LEAD (BRIDGET OR EQUAL)

COPPER TUBING AND FITTINGS:

1. ALL COPPER TUBING SHALL BE ASTM B75 DRAWN TEMPER, ANSI/NSF-61 CERTIFIED, TYPE L THICKNESS.
2. COPPER SOLDER FITTINGS SHALL BE PRODUCED IN ACCORDANCE WITH ASME/ANSI B16.22, AND SHALL BE ANSI/NSF-61 CERTIFIED.

SERVICE LINES:

1. HDPE MATERIAL
   A) LISTED BY THE PPI WITH DESIGNATION OF PE-3408
   B) CELL CLASSIFICATION OF 345434C OR BETTER IN ACCORDANCE WITH ASTM D3350
   C) MUST EXCEED 1000 HOURS WHEN TESTED IN ACCORDANCE WITH ASTM F1248 RING ENVIRONMENTAL STRESS CRACK RESISTANCE TEST) WITH FEWER THAN 50 PERCENT FAILURES.
   D) APPROVED BY THE NATIONAL SANITATION FOUNDATION (NSF) FOR POTABLE WATER SERVICE.
   E) SHALL CONTAIN TWO PERCENT (2%) CARBON BLACK FOR ULTRAVIOLET (UV) PROTECTION AND SHALL BE HOMOGENEOUS THROUGHOUT.

MECHANICAL: FOR MECHANICAL NOTES SEE SHEET M1.1

HYDRONIC PIPING:

1. HYDRONIC HEAT TRACE:
   HYDRONIC HEAT TRACE (WHERE SPECIFIED) SHALL BE A MINIMUM OF 2" DIA. HDPE, SDR 11 AND LISTED BY THE PLASTIC PIPE INSTITUTE (PPI) WITH A DESIGNATION OF PE4710 AND A CELL CLASSIFICATION OF PE445574C OR BETTER AS PER ASTM D3350.

PIPELINE TESTING:

1. GENERAL:
   ALL TESTING SHALL BE IN CONFORMANCE WITH THE FOLLOWING REQUIREMENTS:
   ALL TESTS SHALL BE WITNESSED BY A REPRESENTATIVE DESIGNATED BY THE COMMUNITY. UPON SUCCESSFUL COMPLETION OF A TEST THE RESULTS OF THE TEST SHALL BE DOCUMENTED ON A TEST FORM AND ACKNOWLEDGED BY SIGNATURE OF THE COMMUNITY'S REPRESENTATIVE WITNESSING THE TEST AND BY THE PROJECT SUPERINTENDENT. THE SUPERINTENDENT'S RED LINED AS-BUILT DRAWINGS SHALL ALSO NOTE THE TIME AND DATE OF THE TEST, AS WELL AS THE NAME OF THE COMMUNITY'S WITNESS, FOR EACH PIPE SEGMENT TESTED.
2. FORCEMAIN TESTING:
   PERFORM HYDROSTATIC TESTING OF ALL FORCEMAIN PIPING. FILL THE LINES WITH POTABLE WATER AND REMOVE AIR POCKETS PRIOR TO STARTING THE TEST. PRESSURIZE TO 100 PSI AND LEAVE FOR A MINIMUM OF 1 HOUR. AFTER THIS INITIAL PERIOD, ADD WATER TO BRING THE PRESSURE UP TO 100 PSI AND BEGIN A ONE HOUR TEST. THERE SHALL BE NO LOSS IN PRESSURE DURING THE 1 HOUR TEST FOR THE PIPING TO BE ACCEPTED.
3. GLYCOL HEAT TRACE TESTING - PERFORM HYDROSTATIC TESTING OF GLYCOL HEAT TRACE. HYDROSTATIC TESTS SHALL BE PERFORMED AFTER INSTALLATION. FILL THE LINE WITH WATER AND REMOVE AIR PRIOR TO STARTING THE TEST. PRESSURIZE TO 1.5 X OPERATING PRESSURE (80 PSI) = 120 PSI AND LEAVE FOR A MINIMUM OF 1-HOUR. AFTER THIS INITIAL PERIOD, ADD WATER TO BRING THE PRESSURE UP TO 120 PSI AND BEGIN A 4-HOUR TEST. FOR THE GLYCOL LOOP TO BE ACCEPTED THERE SHOULD BE NO LOSS IN PRESSURE. NO VISIBLE LEAKS SHOULD BE NOTED UPON A VISUAL INSPECTION OF EACH JOINT UNDER PRESSURE.

LEGEND

EXISTING PLAN VIEW	EXISTING PROFILE VIEW	PROPOSED PLAN VIEW	PROPOSED PROFILE VIEW	DESCRIPTION
				PROPOSED BOARD ROAD (WIDTH AS NOTED)
				EXISTING BOARD ROAD TO REMAIN
				EXISTING BOARD ROAD TO BE REMOVED
				GROUND PROFILE
W		W		WATERMAIN
		WM		FUTURE WATERMAIN
		FM		FUTURE WASTEWATER FORCEMAIN
E				OVERHEAD ELECTRIC
POL				PETROLEUM/OIL/LUBRICANTS
				UTILITY POLE AND GUY WIRE ANCHOR
X				FENCE
24				CONTOUR LINE
				SHORELINE
				EXISTING GROUND
				STRUCTURE
				EARTHWORK SLOPE
				NATURAL GROUND OR COMPACTED SOIL
				DIRECTION OF DRAINAGE
				PROPERTY LINE OR SECTION LINE
				MATCHLINE
				PERMANENT EASEMENT
		A.W.W.		ALL WEATHER WOOD
CMP				CORRUGATED METAL PIPE
(xx.xx)				EXISTING GRADE ELEV.
		TOB:		TOP OF BOARD ROAD ELEV.
OR B.C.				BRASS CAP MONUMENT AS NOTED
				TEST HOLE
24.5				SPOT ELEVATION
21				BLOCK NUMBER
3A				LOT NUMBER
IPS				IRON PIPE SIZE (INDUSTRY STANDARD OUTSIDE PIPE DIAMETER)
WW X				6" WELL
		M.B.		MECHANICAL BOLT
		G.R.C.		GALVANIZED RIGID CONDUIT
		ELEV.		ELEVATION

SECTION AND DETAIL DESIGNATIONS

A / S1.2 — SECTION (SECTION LETTER; SHEET ON WHICH SECTION IS SHOWN) — NTS

2 / S2.2 — DETAIL (DETAIL NUMBER; SHEET ON WHICH DETAIL IS SHOWN) — NTS

RECORD DRAWING CERTIFICATE
THESE DRAWINGS REFLECT RECORDED INFORMATION OBTAINED DURING CONSTRUCTION. INFORMATION PROVIDED HEREIN IS ACCURATE TO THE BEST OF MY KNOWLEDGE.
NAME / DATE

SCALE: AS SHOWN
BAR IS ONE INCH ON ORIGINAL DRAWING
IF NOT ONE INCH ON THIS SHEET, ADJUST SCALES ACCORDINGLY

CONSTRUCTION RECORD
FIELD BOOK
STAKING
FOREMAN
AS-BUILT
INSPECTOR

STATE OF ALASKA 4938 PAUL C. WEBNER CE-10276 REGISTERED PROFESSIONAL ENGINEER
6/26/14

WASHETERIA AND WATER TANK
GENERAL NOTES AND LEGEND
CHEFORNAK, ALASKA

CE2 ENGINEERS, INC.
PO BOX 232948 ANCHORAGE, AK 99523 PH: 907-349-1010 FAX: 907-349-1015

REVISION	BY	DATE

Project No. ____ Date MAR. 2014 Designed ____ Drawn ____ Approved PCW

Sheet No. G4.0
SHEET ____ OF ____

G:\ACAD\CHEFORNAK\2013 Washeteria and Water Tank\G4.0 GENERAL NOTES AND LEGEND.dwg, 6/25/2014 2:29:46 PM, cmerz, \\Ce2main\LANIER MP C2050/LD520C PCL 6

EXERPT FROM GOLDER ASSOCIATES REPORT DATED OCTOBER 7, 2013, SECTION 3.0 SITE AND SUBSURFACE CONDITIONS:

THE SUBSURFACE CONDITIONS AT THE SITE WERE GENERALLY CONSISTENT BASED ON HAND PROBE DEPTHS AND THE HAND DUG TEST PITS. FROZEN SOILS, GENERALLY INTERPRETED AS THE TOP OF THE PERMAFROST, WERE ENCOUNTERED ACROSS THE SITE. IN GENERAL, THE ACTIVELY LAYER DEPTH WAS APPROXIMATELY 2 FEET. SUBSURFACE CONDITIONS GENERALLY CONSISTED OF APPROXIMATELY 1.5 FEET OF UNFROZEN ORGANIC MATERIAL (ORGANIC MAT) OVERLYING 0.5 FEET OF FROZEN ORGANIC SILT, OVERLYING FROZEN SILT. IN SOME AREAS, THE HAND PROBE AND TEST PITS ENCOUNTERED BURIED TRASH SEVERAL INCHES UNDER THE ORGANIC MAT.

HAND PROBES WERE NOT CONDUCTED WITHIN THE FOOTPRINT OF THE EXISTING ABANDONED BUILDING AT THE SITE. IT IS UNKNOWN IF THE BUILDING WAS HEATED WHEN IT WAS IN USE. INCREASED DEPTH OF THAW MAY BE PRESENT UNDER THE FOOTPRINT OF THE BUILDING.

BASED ON OUR EXPERIENCE IN CHEFORNAK AND A REVIEW OF HISTORICAL DATA, OUR FINDINGS ARE GENERALLY SIMILAR TO SUBSURFACE CONDITIONS ENCOUNTERED IN OTHER GEOTECHNICAL EXPLORATIONS.

J:\2013 Jobs\133-95062 Ce2 Chefornak Washeteria\CAD\PRODUCTION\Borehole_Location_Maps.dwg [Layout: 2 PROBE GRID | Modified: BSeikke 10/07/2013 11:29 AM | Plotted: BSeikke 10/07/2013

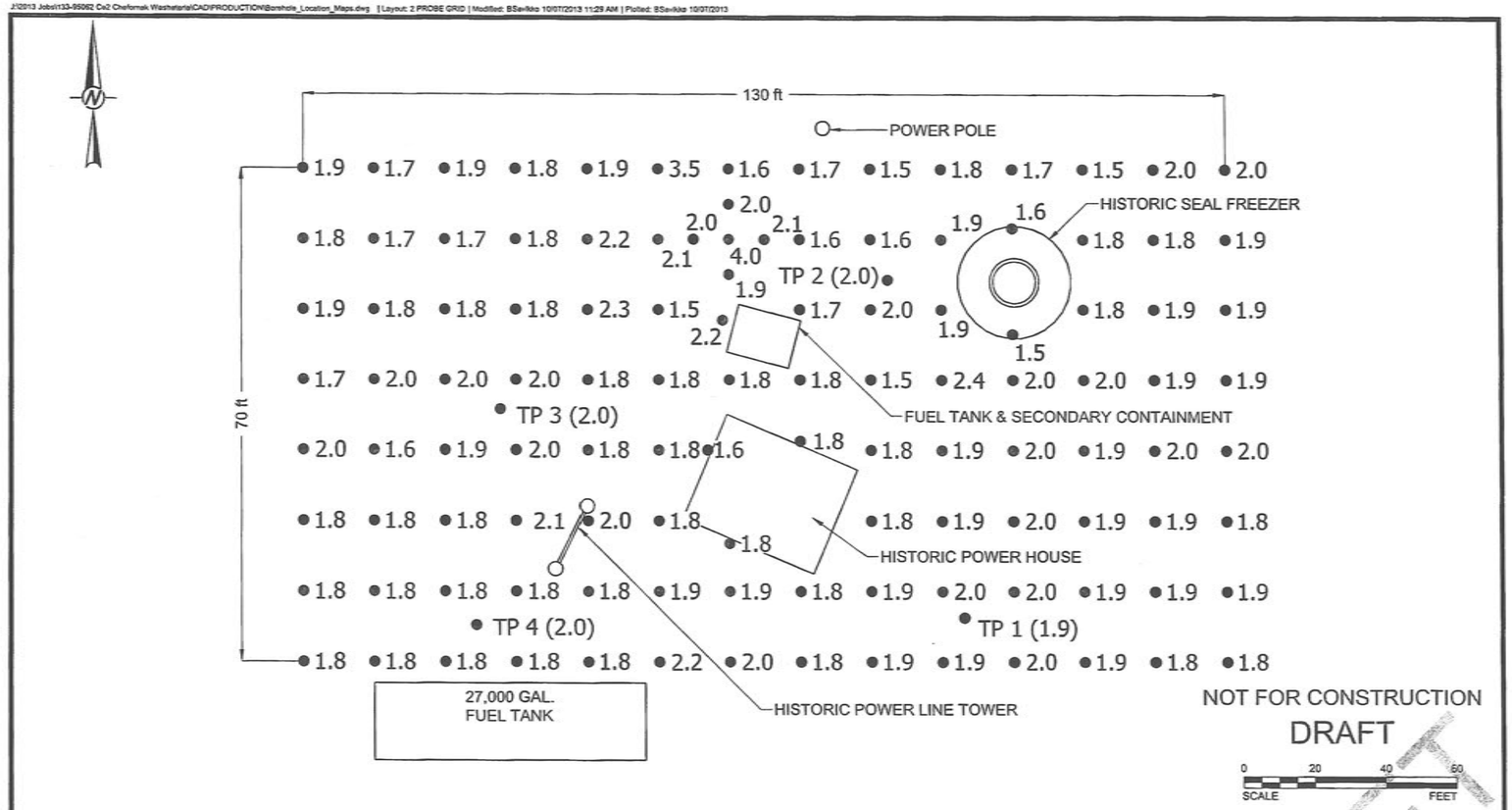

LEGEND

- ● 1.9 PROBE LOCATION IN FEET, TO REFUSAL
- ● TP (1.9) TEST PIT LOCATION IN FEET, TO REFUSAL

NOTES

1. ALL LOCATIONS ARE APPROXIMATE

PROJECT: CE2 ENGINEERS, INC. WASHETERIA CHEFORNAK, ALASKA

TITLE: **PROBE GRID**

Golder Associates

PROJECT No.		133-95062	FILE No.	Borehole_Location_Maps
DESIGN	JLL	2013-08-21	SCALE	1"=40'
CADD	MSF	2013-08-21	FIGURE	2
CHECK	BBS	2013-10-07		
REVIEW				

DRAFT

RECORD DRAWING CERTIFICATE
THESE DRAWINGS REFLECT RECORDED INFORMATION OBTAINED DURING CONSTRUCTION. INFORMATION PROVIDED HEREIN IS ACCURATE TO THE BEST OF MY KNOWLEDGE.
NAME DATE

SCALE: AS SHOWN
BAR IS ONE INCH ON ORIGINAL DRAWING
IF NOT ONE INCH ON THIS SHEET, ADJUST SCALES ACCORDINGLY

CONSTRUCTION RECORD
FIELD BOOK
STAKING
FOREMAN
AS-BUILT
INSPECTOR

10/2/14

STATE OF ALASKA 49TH PAUL C. WEIMER CE-10276 REGISTERED PROFESSIONAL ENGINEER

WASHETERIA AND WATER TANK
GEOTECHNICAL INFORMATION
CHEFORNAK, ALASKA

CE2 ENGINEERS, INC.
PO BOX 223948 ANCHORAGE, AK 99523 PH: 907-349-1010 FAX: 907-349-1015

REVISION	BY	DATE

Project No. ___ Date MAR. 2014 Designed PCW Drawn CM. Approved PCW.

Sheet No. G5.0
SHEET ___ OF ___

G:\ACAD\CHEFORNAK\2013 Washeteria and Water Tank\G5.0 GEOTECHNICAL INFORMATION.dwg, 6/26/2014 12:24:30 PM, cmerz, \\Ce2main\LANIER MP C2050/LD520C PCL 6

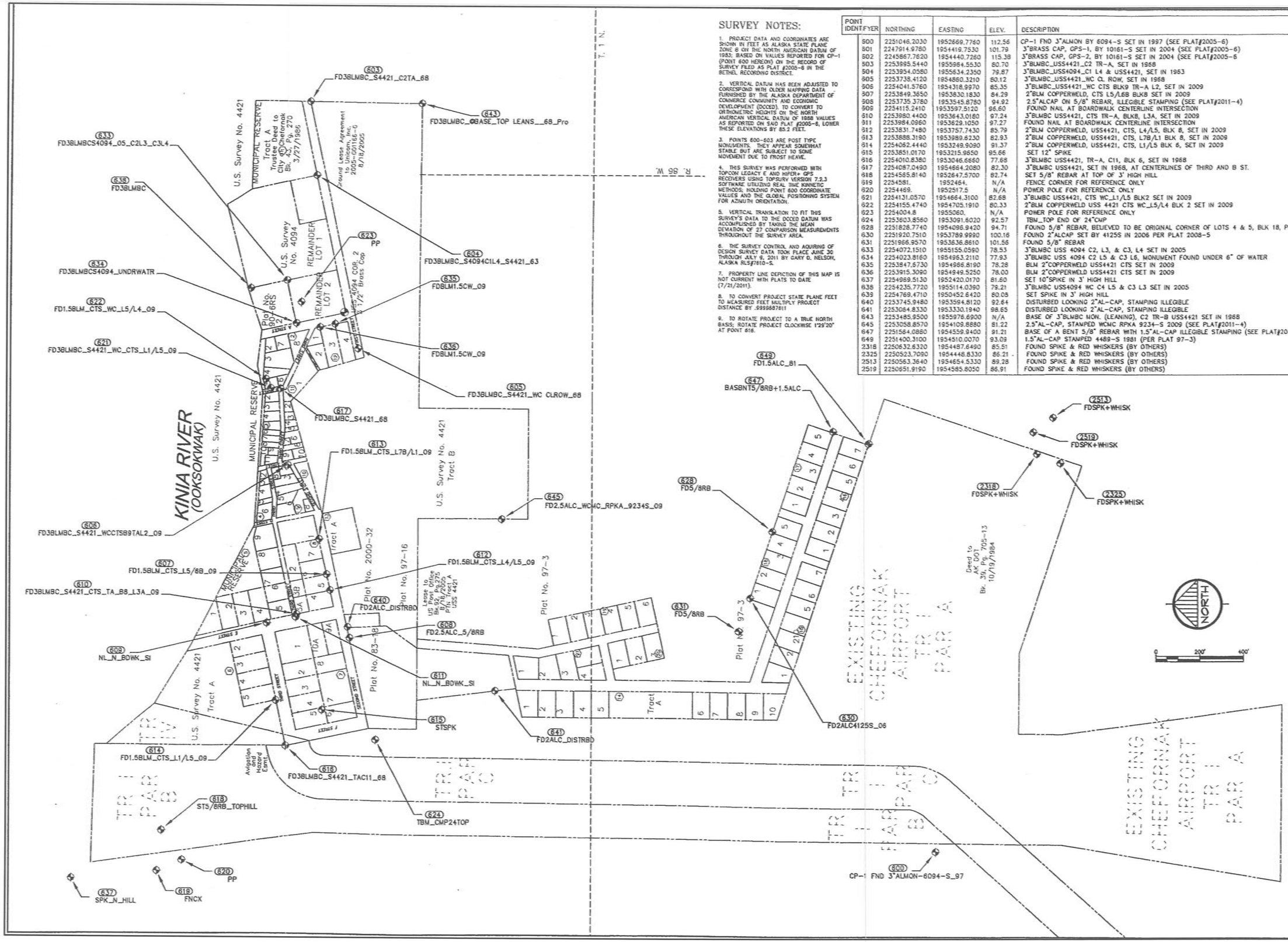

SURVEY NOTES:

1. PROJECT DATA AND COORDINATES ARE SHOWN IN FEET AS ALASKA STATE PLANE ZONE 6 ON THE NORTH AMERICAN DATUM OF 1983; BASED ON VALUES REPORTED FOR CP-1 (POINT 600 HEREON) ON THE RECORD OF SURVEY FILED AS PLAT #2005-6 IN THE BETHEL RECORDING DISTRICT.

2. VERTICAL DATUM HAS BEEN ADJUSTED TO CORRESPOND WITH OLDER MAPPING DATA FURNISHED BY THE ALASKA DEPARTMENT OF COMMERCE COMMUNITY AND ECONOMIC DEVELOPMENT (DCCED). TO CONVERT TO ORTHOMETRIC HEIGHTS ON THE NORTH AMERICAN VERTICAL DATUM OF 1988 VALUES AS REPORTED ON SAID PLAT #2005-6, LOWER THESE ELEVATIONS BY 85.2 FEET.

3. POINTS 600-603 ARE POST TYPE MONUMENTS. THEY APPEAR SOMEWHAT STABLE BUT ARE SUBJECT TO SOME MOVEMENT DUE TO FROST HEAVE.

4. THIS SURVEY WAS PERFORMED WITH TOPCON LEGACY E AND HIPER+ GPS RECEIVERS USING TOPSURV VERSION 7.2.3 SOFTWARE UTILIZING REAL TIME KINNETIC METHODS; HOLDING POINT 600 COORDINATE VALUES AND THE GLOBAL POSITIONING SYSTEM FOR AZIMUTH ORIENTATION.

5. VERTICAL TRANSLATION TO FIT THIS SURVEY'S DATA TO THE DCCED DATUM WAS ACCOMPLISHED BY TAKING THE MEAN DEVIATION OF 27 COMPARISON MEASUREMENTS THROUGHOUT THE SURVEY AREA.

6. THE SURVEY CONTROL AND ACQUIRING OF DESIGN SURVEY DATA TOOK PLACE JUNE 30 THROUGH JULY 9, 2011 BY GARY D. NELSON, ALASKA RLS#7810-S.

7. PROPERTY LINE DEPICTION OF THIS MAP IS NOT CURRENT WITH PLATS TO DATE (7/21/2011).

8. TO CONVERT PROJECT STATE PLANE FEET TO MEASURED FEET MULTIPLY PROJECT DISTANCE BY .9999887811

9. TO ROTATE PROJECT TO A TRUE NORTH BASIS; ROTATE PROJECT CLOCKWISE 1°29'20" AT POINT 616.

POINT IDENTIFYER	NORTHING	EASTING	ELEV.	DESCRIPTION
500	2251046.2030	1952669.7760	112.56	CP-1 FND 3"ALMON BY 6094-S SET IN 1997 (SEE PLAT#2005-6)
501	2247914.9780	1954419.7530	101.79	3"BRASS CAP, GPS-1, BY 10161-S SET IN 2004 (SEE PLAT#2005-6)
502	2245867.7620	1954440.7260	115.38	3"BRASS CAP, GPS-2, BY 10161-S SET IN 2004 (SEE PLAT#2005-6
503	2253995.5440	1955984.5530	80.70	3"BLMBC_USS4421_C2 TR-A, SET IN 1968
504	2253954.0580	1955634.2350	79.87	3"BLMBC_USS4094_C1 L4 & USS4421, SET IN 1953
505	2253738.4120	1954860.3210	80.12	3"BLMBC_USS4421_WC CL ROW, SET IN 1968
506	2254041.5760	1954318.9970	85.35	3"BLMBC_USS4421_WC CTS BLK9 TR-A L2, SET IN 2009
507	2253849.3650	1953830.1830	84.29	2"BLM COPPERWELD, CTS L5/L6B BLK8 SET IN 2009
508	2253735.3780	1953545.8780	94.92	2.5"ALCAP ON 5/8" REBAR, ILLEGIBLE STAMPING (SEE PLAT#2011-4)
509	2254115.2410	1953597.5120	96.60	FOUND NAIL AT BOARDWALK CENTERLINE INTERSECTION
510	2253980.4400	1953643.0180	97.24	3"BLMBC USS4421, CTS TR-A, BLK8, L3A, SET IN 2009
511	2253984.0960	1953629.1050	97.27	FOUND NAIL AT BOARDWALK CENTERLINE INTERSECTION
512	2253831.7480	1953757.7430	85.79	2"BLM COPPERWELD, USS4421, CTS, L4/L5, BLK 8, SET IN 2009
513	2253888.3190	1953989.6230	82.93	2"BLM COPPERWELD, USS4421, CTS, L7B/L1 BLK 8, SET IN 2009
514	2254062.4440	1953249.9090	91.37	2"BLM COPPERWELD, USS4421, CTS, L1/L5 BLK 6, SET IN 2009
515	2253851.0170	1953215.9650	95.66	SET 12" SPIKE
516	2254010.8380	1953046.6650	77.68	3"BLMBC USS4421, TR-A, C11, BLK 6, SET IN 1968
517	2254087.0490	1954664.2080	82.30	3"BLMBC USS4421, SET IN 1968, AT CENTERLINES OF THIRD AND B ST.
518	2254585.8140	1952647.5700	82.74	SET 5/8" REBAR AT TOP OF 3' HIGH HILL
519	2254581.	1952464.	N/A	FENCE CORNER FOR REFERENCE ONLY
520	2254469.	1952517.5	N/A	POWER POLE FOR REFERENCE ONLY
621	2254131.0570	1954664.3100	82.68	3"BLMBC USS4421, CTS WC_L1/L5 BLK2 SET IN 2009
622	2254155.4740	1954705.1910	80.33	2"BLM COPPERWELD USS 4421 CTS WC_L5/L4 BLK 2 SET IN 2009
623	2254004.8	1955060.	N/A	POWER POLE FOR REFERENCE ONLY
624	2253603.8560	1953091.6020	92.57	TBM_TOP END OF 24"CMP
628	2251828.7740	1954096.9420	94.71	FOUND 5/8" REBAR, BELIEVED TO BE ORIGINAL CORNER OF LOTS 4 & 5, BLK 18, PLAT 97-3
630	2251920.7510	1953789.9990	100.16	FOUND 2"ALCAP SET BY 4125S IN 2006 PER PLAT 2008-5
631	2251966.9570	1953836.8610	101.56	FOUND 5/8" REBAR
633	2254072.1510	1955155.0590	78.53	3"BLMBC USS 4094 C2, L3, & C3, L4 SET IN 2005
634	2254023.8160	1954953.2110	77.93	3"BLMBC USS 4094 C2 L5 & C3 L6, MONUMENT FOUND UNDER 6" OF WATER
635	2253847.6730	1954966.8190	78.28	BLM 2"COPPERWELD USS4421 CTS SET IN 2009
636	2253915.3090	1954949.5250	78.00	BLM 2"COPPERWELD USS4421 CTS SET IN 2009
637	2254989.5130	1952420.0170	81.50	SET 10"SPIKE IN 3' HIGH HILL
638	2254235.7720	1955114.0390	79.21	3"BLMBC USS4094 WC C4 L5 & C3 L3 SET IN 2005
639	2254769.4710	1950452.6420	80.08	SET SPIKE IN 3' HIGH HILL
640	2253745.9480	1953564.8120	92.64	DISTURBED LOOKING 2"AL-CAP, STAMPING ILLEGIBLE
641	2253084.8330	1953330.1940	98.65	DISTURBED LOOKING 2"AL-CAP, STAMPING ILLEGIBLE
643	2253485.9500	1955976.6900	N/A	BASE OF 3"BLMBC MON. (LEANING), C2 TR-B USS4421 SET IN 1968
645	2253058.8570	1954109.8880	81.22	2.5"AL-CAP, STAMPED WCMC RPKA 9234-S 2009 (SEE PLAT#2011-4)
647	2251564.0880	1954559.9400	91.21	BASE OF A BENT 5/8" REBAR WITH 1.5"AL-CAP ILLEGIBLE STAMPING (SEE PLAT#2011-4)
649	2251400.3100	1954510.0070	93.09	1.5"AL-CAP STAMPED 4489-S 1981 (PER PLAT 97-3)
2318	2250632.6320	1954487.6490	85.51	FOUND SPIKE & RED WHISKERS (BY OTHERS)
2325	2250523.7090	1954448.8330	86.21	FOUND SPIKE & RED WHISKERS (BY OTHERS)
2513	2250563.3640	1954654.5330	89.28	FOUND SPIKE & RED WHISKERS (BY OTHERS)
2519	2250651.9190	1954585.8050	88.91	FOUND SPIKE & RED WHISKERS (BY OTHERS)

RECORD DRAWING CERTIFICATE
THESE DRAWINGS REFLECT RECORDED INFORMATION OBTAINED DURING CONSTRUCTION. INFORMATION PROVIDED HEREIN IS ACCURATE TO THE BEST OF MY KNOWLEDGE.
NAME DATE

SCALE: AS SHOWN
BAR IS ONE INCH ON ORIGINAL DRAWING 0 1"
IF NOT ONE INCH ON THIS SHEET, ADJUST SCALES ACCORDINGLY

CONSTRUCTION RECORD
FIELD BOOK
STAKING
FOREMAN
AS-BUILT
INSPECTOR

STATE OF ALASKA 49TH GARY D. NELSON LS 7810 9-5-11

SURVEY CONTROL
CHEFORNAK, ALASKA

CE2 ENGINEERS, INC.
PO BOX 223549 ANCHORAGE, AK 99522 PH: 907-349-1010 FAX: 907-349-1015

REVISION	BY	DATE

Project No. ____
Date ____
Designed ____ CM
Drawn ____ GN
Approved ____

Sheet No.
C1.0

G:\ACAD\CHEFORNAK\2013 Washeteria and Water Tank\C1.0 SURVEY CONTROL.dwg, 6/25/2014 2:28:29 PM, cmerz, \\Ce2main\LANIER MP C2050/LD520C PCL 6

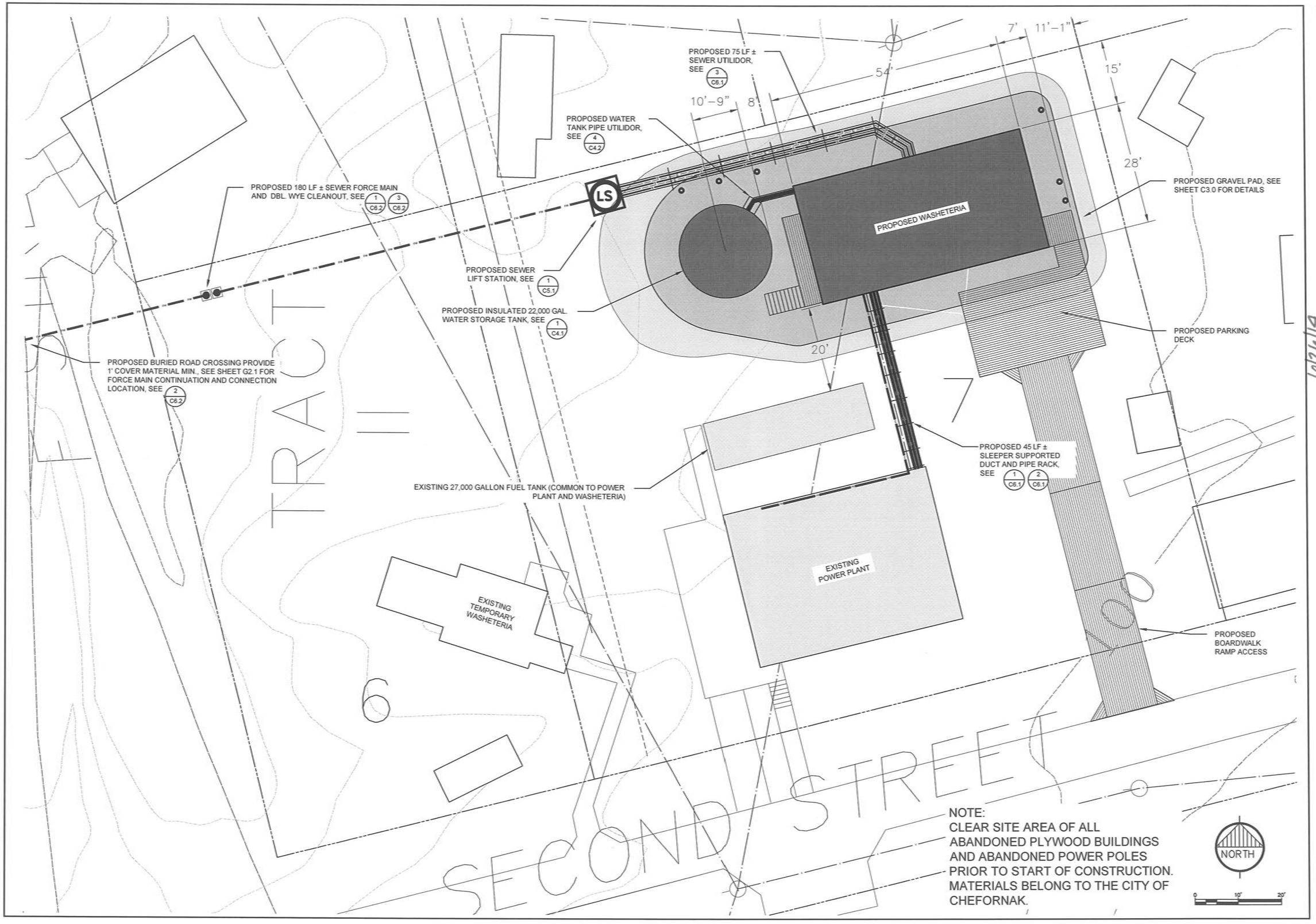

NOTE:
CLEAR SITE AREA OF ALL ABANDONED PLYWOOD BUILDINGS AND ABANDONED POWER POLES PRIOR TO START OF CONSTRUCTION. MATERIALS BELONG TO THE CITY OF CHEFORNAK.

RECORD DRAWING CERTIFICATE
THESE DRAWINGS REFLECT RECORDED INFORMATION OBTAINED DURING CONSTRUCTION. INFORMATION PROVIDED HEREIN IS ACCURATE TO THE BEST OF MY KNOWLEDGE.
NAME DATE

SCALE: AS SHOWN
BAR IS ONE INCH ON ORIGINAL DRAWING
0 1"
IF NOT ONE INCH ON THIS SHEET, ADJUST SCALES ACCORDINGLY

CONSTRUCTION RECORD
FIELD BOOK
STAKING
FOREMAN
AS-BUILT
INSPECTOR

STATE OF ALASKA 49TH REGISTERED PROFESSIONAL ENGINEER PAUL C. WERNER CE-10276
6/25/14

WASHETERIA AND WATER TANK
PROJECT SITE PLAN
CHEFORNAK, ALASKA

CE2 ENGINEERS, INC.
PO BOX 223948 ANCHORAGE, AK 99523 PH: 907-349-1010 FAX: 907-349-1015

REVISION	BY	DATE

Project No. ____ Date MAR. 2014
Designed ____ CM
Drawn ____
Approved ____ PCW

Sheet No. C2.0
SHEET ____ OF ____

G:\ACAD\CHEFORNAK\2013 Washeteria and Water Tank\C2.0 SITE PLAN.dwg, 6/25/2014 2:36:16 PM, cmerz, \\Ce2main\LANIER MP C2050/LD520C PCL 6

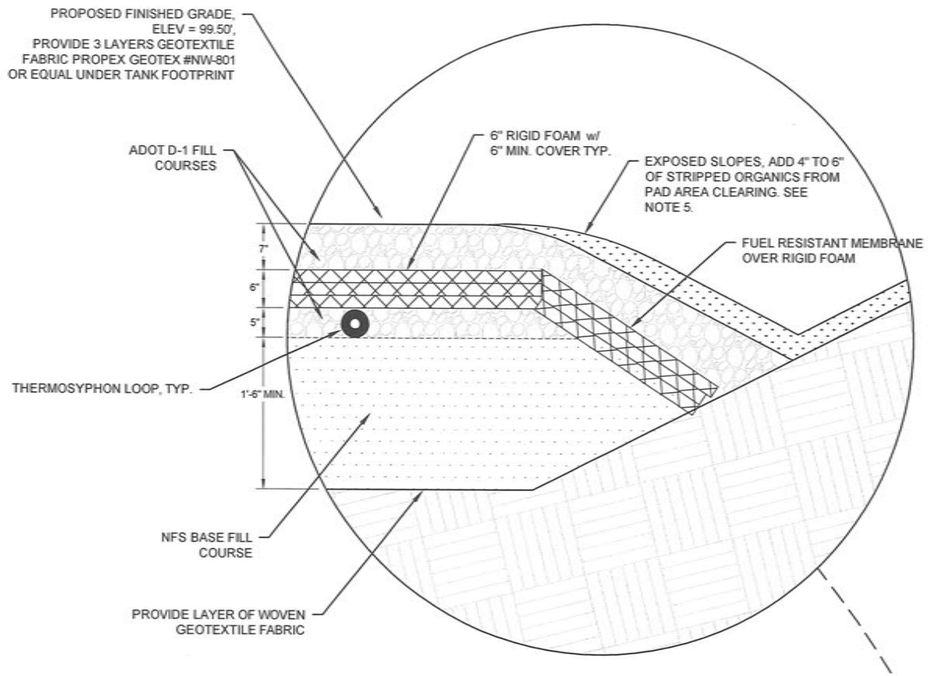

2 PAD DETAIL
SCALE: 1" = 1'-0"

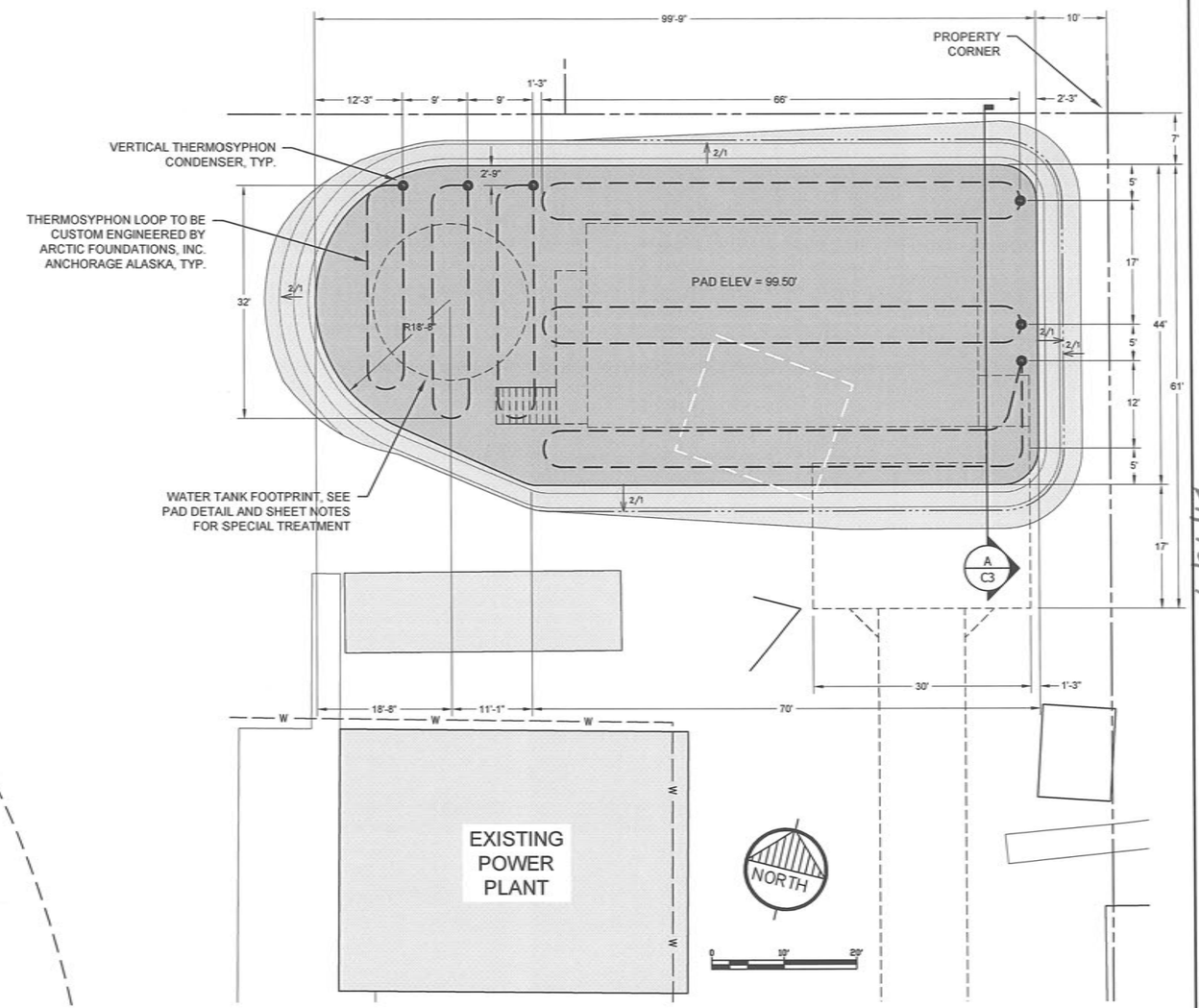

1 PAD CONSTRUCTION PLAN
SCALE: 1" = 10'

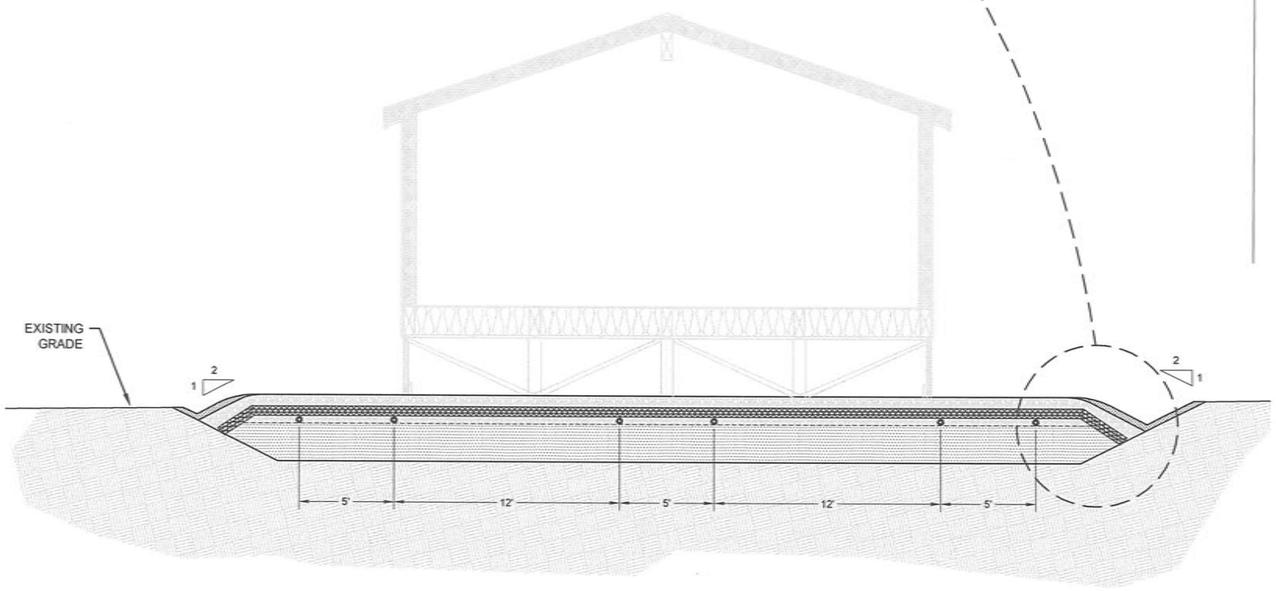

A PAD CONSTRUCTION SECTION
SCALE: 1/4" = 1'-0"

NOTES:

1. ALL DIMENSIONS ARE PRELIMINARY AND MAY CHANGE DUE TO GEOTECHNICAL INFORMATION.
2. THREE THERMOSYPHON LOOPS WILL BE PLACED AND CHARGED FOR BOTH WATER STORAGE TANK PAD AND WASHETERIA PAD (TOTAL 6 EA).
3. FOAM INSULATION SHALL BE DOW HI-40 EXTRUDED POLYSTYRENE INSULATION(2'x8'x2" THK) SHEETS, PLACED CROSSWAYS IN 3 LAYERS FOR 6" INSULATION.
4. UNDER WATER TANK FOOTPRINT PROVIDE 3 LAYERS NON-WOVEN GEOTEXTILE FABRIC PROPEX GEOTEX #NW-801 OR EQUAL FOR PADDING BOTTOM OF TANK.
5. REVEGITATION - AFTER FINAL GRADING AND SHAPING, SIDE SLOPE CAP OF ORGANICS SHALL BE FERTILIZED, WATERED, AND SEEDED IN ACCORDANCE WITH THE FOLOWING SPECIFICATIONS:

	NAME/TYPE	RATE	METHOD
FERTILIZER:	20-20-20	180 lbs/acre	Broadcast
BLENDED SEED MIX:			
Bering Hairgrass	Norcoast	16 lbs/acre	Broadcast
Ryegrass	Annual	2 lbs/acre	Broadcast
Red Fescue	Arctic Red	14 lbs/acre	Broadcast

SEEDING SHALL TAKE PLACE PRIOR TO AUGUST 15TH OF THE YEAR OF PROJECT COMPLETION, UNLESS OTHERWISE APPROVED.

RECORD DRAWING CERTIFICATE
THESE DRAWINGS REFLECT RECORDED INFORMATION OBTAINED DURING CONSTRUCTION. INFORMATION PROVIDED HEREIN IS ACCURATE TO THE BEST OF MY KNOWLEDGE.
NAME DATE

SCALE: AS SHOWN
BAR IS ONE INCH ON ORIGINAL DRAWING
IF NOT ONE INCH ON THIS SHEET, ADJUST SCALE ACCORDINGLY

CONSTRUCTION RECORD
FIELD BOOK
STAKING
FOREMAN
AS-BUILT
INSPECTOR

10/26/14

STATE OF ALASKA 49TH REGISTERED PROFESSIONAL ENGINEER PAUL C. WEBNER CE-10276

WASHETERIA AND WATER TANK
PAD CONSTRUCTION
CHEFORNAK, ALASKA

CE2 ENGINEERS, INC.
PO BOX 223248 ANCHORAGE, AK 99523 PH: 907-349-1015 FAX: 907-349-1015

REVISION	BY	DATE

Project No. ____ Date MAR. 2014
Designed PCW
Drawn CM
Approved PCW

Sheet No. C3.0
SHEET ____ OF ____

G:\ACAD\CHEFORNAK\2013 Washeteria and Water Tank\C3.0 Pad Construction.dwg, 6/25/2014 2:27:43 PM, cmerz, \\Ce2main\LANIER MP C2050/LD520C PCL 6

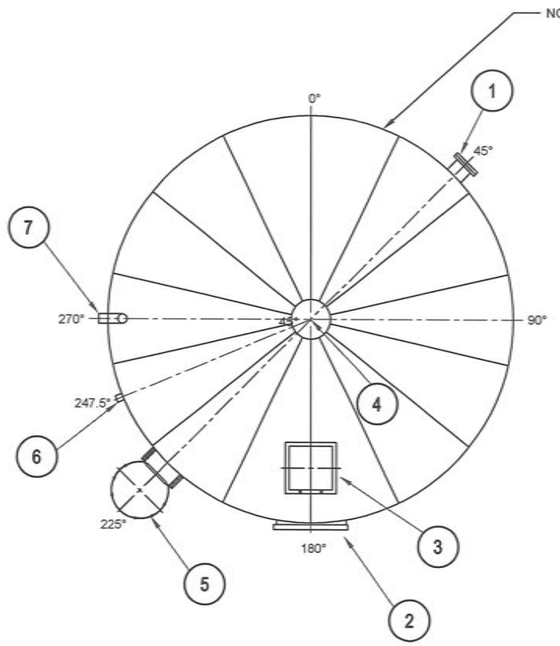

1 / C4.1 WATER TANK DECK PLAN
NOT TO SCALE

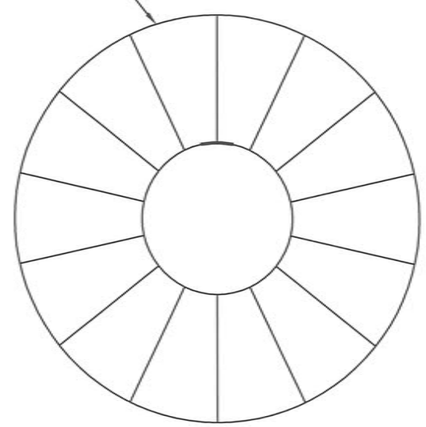

2 / C4.1 WATER TANK BOTTOM PLAN
NOT TO SCALE

NOTES

1. ORIENT ACCESSORIES AS SHOWN. IF CONFLICT ARISES WITH STAVE VERTICAL SEAMS, CONTACT ENGINEER FOR RESOLUTION.
2. TANK TO MEET AWWA-D 103-9 STANDARDS AND OPENING REINFORCEMENT TO COMPLY WITH API650.
3. A ROLLED TAPERED PANEL (RTP) TYPE TANK IS ALSO ACCEPTABLE.
4. TANK SHALL BE POWDER COATED CARBON STEEL w/ INTERIOR COATING MEETING NSF-61.
5. ALL NOZZLES, FLANGES, SUPPORTS AND INTERNAL PIPE SHALL BE STAINLESS STEEL TYPE ASTM A240, TYPE 304L.
6. ALL FLANGED CONNECTIONS SHALL MEET THE STANDARD REQUIREMENTS OF AWWA C228, CLASS D.
7. TANK WILL BE INSULATED WITH 5" FOAM INSULATION TOP (DOUBLE DECK) AND SIDES (THERMACON OR EQUAL). INCLUDING MANHOLE INSULATION COVERS.
8. PROVIDE OSHA COMPLIANT LADDER AND GUARDRAILS.

ACCESSORY ORIENTATION CHART

ITEM	SERVICE	SIZE	REF DEGREE	RADIUS	ELEVATION FROM BOTTOM FLANGE OF SIDE STAVE TO CENTERLINE OF ACCESSORY
1	NOZZLE MANIFOLD	10"	45°	---	1'-0"
2	SHELL MANWAY	30"	180°	---	2'-6"
3	ROOF HATCH	24"	180°	---	---
4	MUSHROOM VENTILATOR	20"	CENTER	CENTER	---
5	LADDER, SAFETY CAGE, LOCKING LID	---	225°	---	---
6	FLANGED DRAIN NOZZLE AND INTERNAL SUCTION ELBOW	3"	247.5°	---	9"
7	INTERNAL OVERFLOW PIPE	4"	270°	---	2'-0"

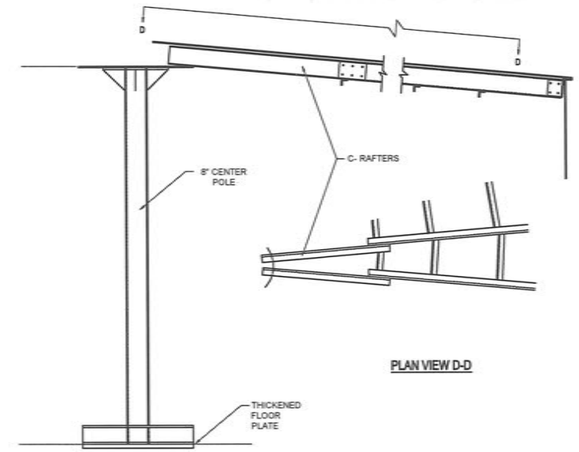

PLAN VIEW D-D

3 / C4.1 CENTER SUPPORT DETAIL
NOT TO SCALE

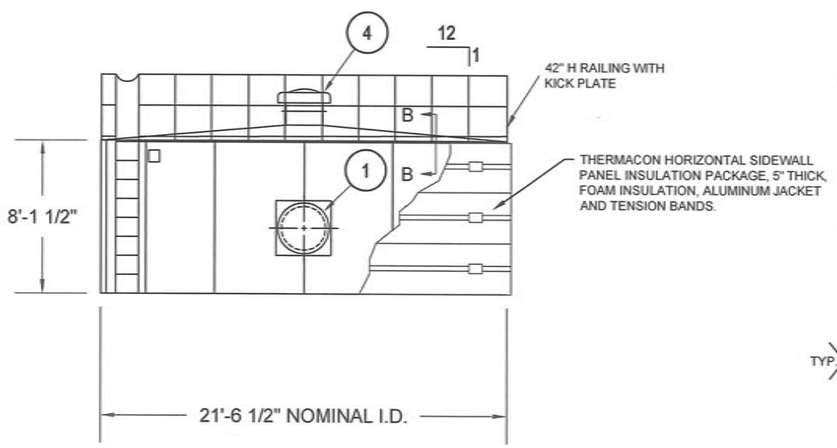

A / C4.1 WATER TANK ELEVATION
NOT TO SCALE

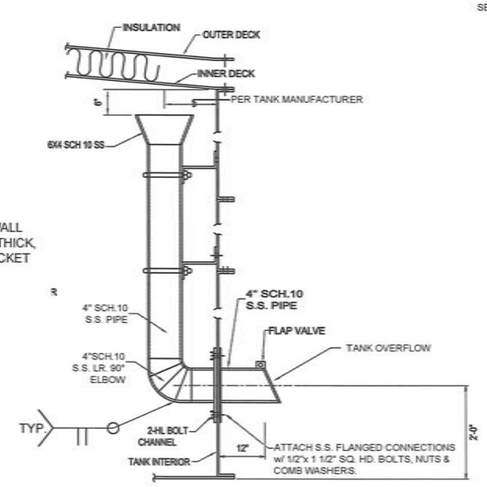

4 / C4.1 INTERNAL OVERFLOW WEIR
NOT TO SCALE

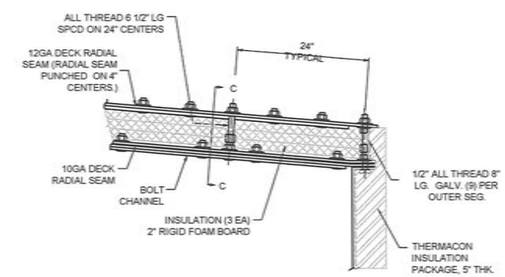

B / C4.1 SECTION B-B
NOT TO SCALE

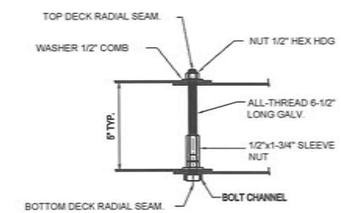

C / C4.1 SECTION C-C
NOT TO SCALE

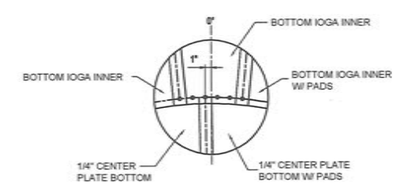

5 / C4.1 FLOOR JOINT DETAIL
NOT TO SCALE

RECORD DRAWING CERTIFICATE
THESE DRAWINGS REFLECT RECORDED INFORMATION OBTAINED DURING CONSTRUCTION. INFORMATION PROVIDED HEREIN IS ACCURATE TO THE BEST OF MY KNOWLEDGE.
NAME DATE

SCALE: AS SHOWN
BAR IS ONE INCH ON ORIGINAL DRAWING
0 1"
IF NOT ONE INCH ON THIS SHEET, ADJUST SCALES ACCORDINGLY

CONSTRUCTION RECORD
FIELD BOOK
STAKING
FOREMAN
AS-BUILT
INSPECTOR

6/26/14
STATE OF ALASKA 4938 PAUL C. WEBNER CE-10276 REGISTERED PROFESSIONAL ENGINEER

WASHETERIA AND WATER TANK
WATER TANK PLAN, ELEVATIONS, AND DETAILS
CHEFORNAK, ALASKA

CE2 ENGINEERS, INC.
PO BOX 232049 ANCHORAGE, AK 99523 PH: 907-349-1010 FAX: 907-349-1015

REVISION	BY	DATE

Project No. ____
Date MAR. 2014
Designed PCW
Drawn CM
Approved PCW

Sheet No. C4.1
SHEET ____ OF ____

G:\ACAD\CHEFORNAK\2013 Washeteria and Water Tank\C4.1 C4.2 WATER TANK.dwg, 6/25/2014 2:27:22 PM, cmerz, \\Ce2main\LANIER MP C2050/LD520C PCL 6

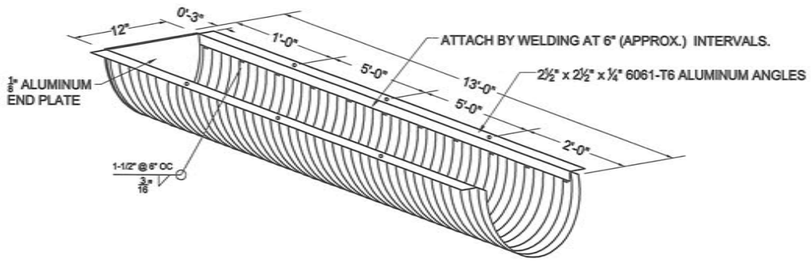

NOTES:

1) DIMENSIONS ARE SUBJECT TO MANUFACTURING TOLERANCES.

1 / C4.2 OVERFLOW CULVERT DETAIL

NOT TO SCALE

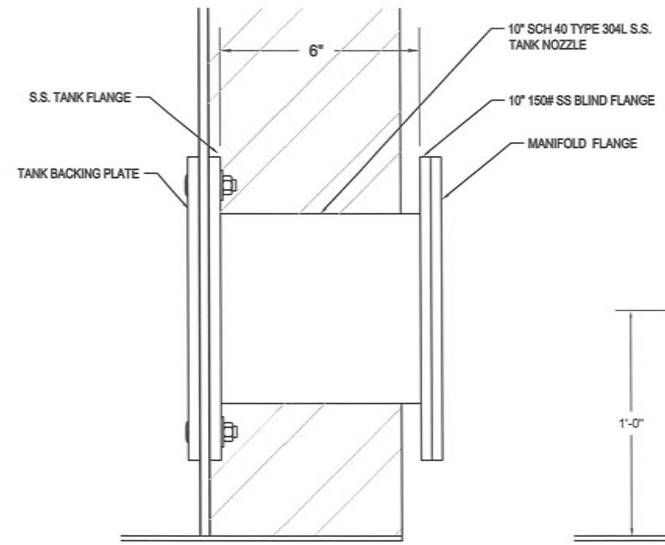

SIDE VIEW

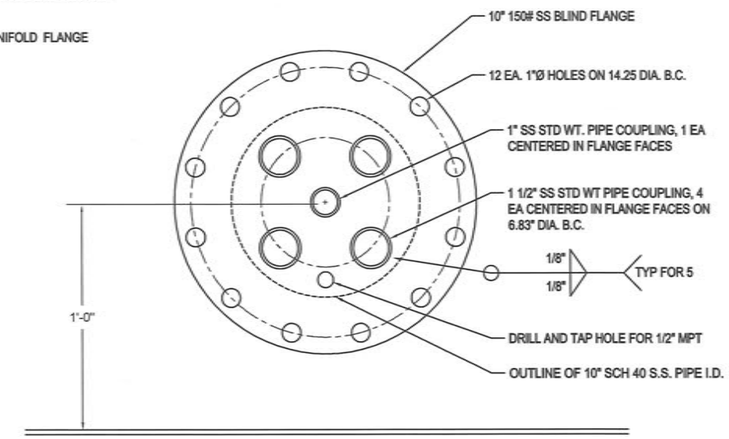

FRONT VIEW

2 / C4.2 WATER TANK PIPE MANIFOLD FLANGE

NOT TO SCALE

NOTES:

1. REMOVE ALL ORGANIC MATERIAL 6-10" BENEATH THE 4x12 SLEEPERS AND REPLACE WITH ADOT TYPE C-1 MATERIAL.
2. STACK UP TO 2 SLEEPERS AS FIELD REQUIRED.
3. UTILIDOR SLEEPER SUPPORTS WILL BE PLACED EVERY 6' O.C.

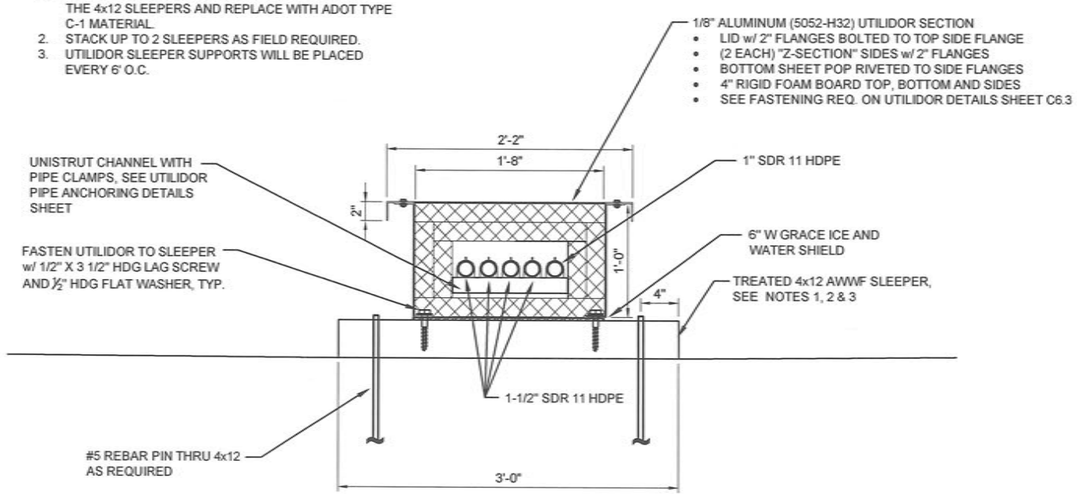

4 / C4.2 WATER TANK PIPE UTILIDOR

NOT TO SCALE

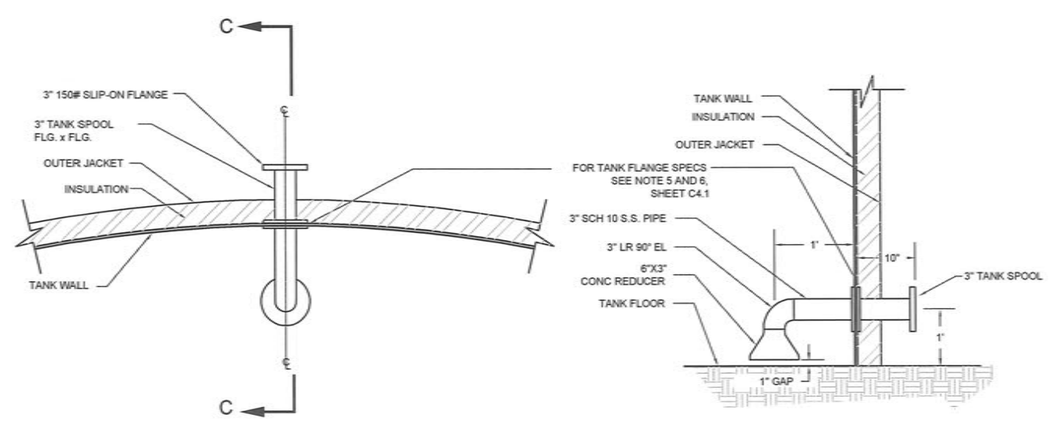

SECTION C-C

3 / C4.2 3" DRAIN PIPE AND SUCTION DETAIL

NOT TO SCALE

RECORD DRAWING CERTIFICATE

THESE DRAWINGS REFLECT RECORDED INFORMATION OBTAINED DURING CONSTRUCTION. INFORMATION PROVIDED HEREIN IS ACCURATE TO THE BEST OF MY KNOWLEDGE.

NAME _____ DATE _____

SCALE: AS SHOWN

BAR IS ONE INCH ON ORIGINAL DRAWING. 0 1"

IF NOT ONE INCH ON THIS SHEET, ADJUST SCALES ACCORDINGLY

CONSTRUCTION RECORD

FIELD BOOK

STAKING

FOREMAN

AS-BUILT

INSPECTOR

6/26/14

STATE OF ALASKA 49TH FRANK L. WEBER CE-10276 REGISTERED PROFESSIONAL ENGINEER

WASHETERIA AND WATER TANK

WATER TANK DETAILS

CHEFORNAK, ALASKA

CE2 ENGINEERS, INC.

PO BOX 232048 ANCHORAGE, AK 99523 PH: 907-349-1019 FAX: 907-349-1015

REVISION	BY	DATE

Project No. _____ Date MAR. 2014

Designed PCW

Drawn CM

Approved PCW

Sheet No. C4.2

SHEET _____ OF _____

G:\ACAD\CHEFORNAK\2013 Washeteria and Water Tank\C4.1 C4.2 WATER TANK.dwg, 6/25/2014 2:27:09 PM, cmerz, \\Ce2main\LANIER MP C2050/LD520C PCL 6

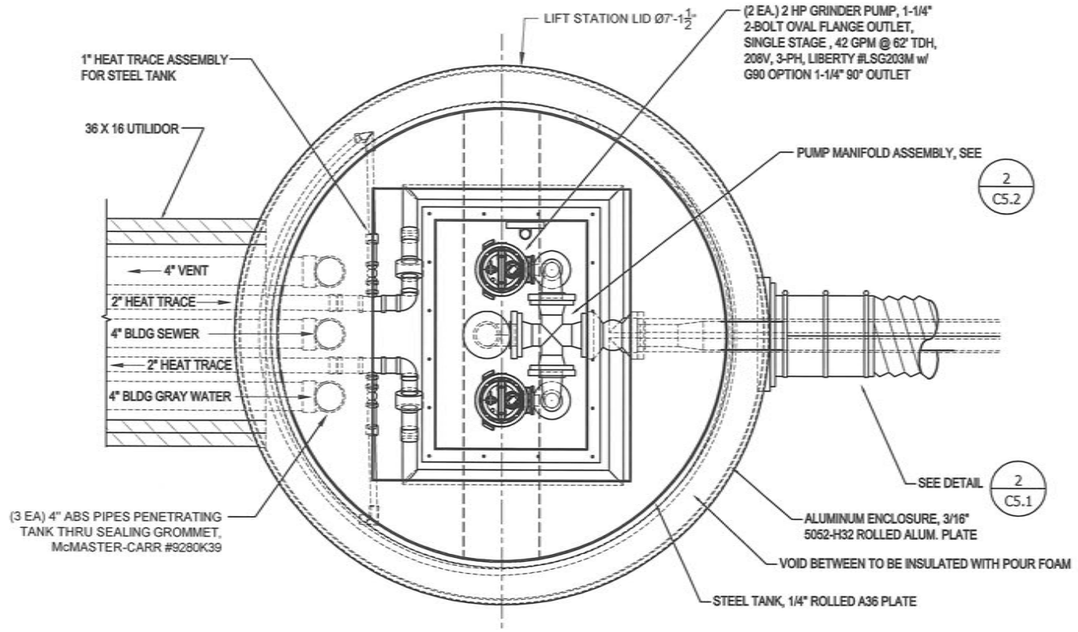

1 C5.1 LIFT STATION PLAN VIEW
NTS

LIFT STATION DESIGN CRITERIA

WORST CASE SCENARIO:

4 EA 30 LB WASHER-EXTRACTORS AND 2 EA 18 LB WASHERS DISCHARGE SIMULTANEOUSLY IN 5 MINUTES DURATION, ALONG WITH 2 EA SHOWERS IN 10 MIN, 2 EA TOILET FLUSHES, AND 2 EA LAVATORY USES.

TOTAL WASHETERIA WASTEWATER VOLUME:

4 EA 30 LB UNITS:	4 X 22 GAL	=	88 GAL
2 EA 18 LB UNITS:	2 X 11 GAL	=	22 GAL
2 EA SHOWER:	2 X 25 GAL	=	40 GAL
2 EA TOILET FLUSH:	2 X 1.6 GAL	=	3 GAL
2 EA LAVATORY USE:	2 x 1 GAL	=	2 GAL
TOTAL VOLUME IN PEAK FLOW		=	165 GAL

DESIGN FOR 200 GAL, OR 26.7 CU FT

ASSUME 1 FT DRAWDOWN BY LEAD PUMP, SO TANK CROSS SECTIONAL AREA IS 26.7 CU FT/1 FT = 26.7 SQ FT

MINIMUM AREA = PI/4 X D^2 =26.7 SQ FT

MINIMUM D = SQRT(4/PI X 26.7) = 5.8 FT, SAY 6 FT DIAMETER

TANK DEPTH AND OPERATING POINTS:

LOW LEVEL: COVER LIFT PUMP, SO DEPTH FROM TANK BOTTOM = 1'-6"

LEAD PUMP ON: 1' ABOVE LOW LEVEL, SO 2'-6"

LAG PUMP ON: 6" ABOVE LEAD PUMP ON, SO 3'-0"

HIGH LEVEL ALARM: 6" ABOVE LAG PUMP ON, SO 3'-6". HIGH LEVEL ALARM SETS OFF ALARM AND SHUT DOWNS WASHERS TO PREVENT OVERFLOW OF LIFT STATION.

ROOF OF TANK: 6" ABOVE HIGH LEVEL ALARM, SO 4'-0"

LIFT STATION PUMPS SHOULD BE ABLE TO DRAIN DOWN 1 FT OF DEPTH (200 GAL) IN 5 MINUTES WITH JUST THE LEAD PUMP, SO A LIBERTY LSG 203M 2 HP GRINDER PUMP DELIVERING 40 GPM @65' TDH WILL MEET THIS REQUIREMENT. TWO PUMPS WILL BE INSTALLED WITH A LIBERTY IPD-34-511 DUPLEX CONTROL PANEL.

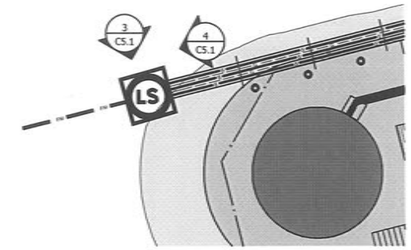

KEY MAP

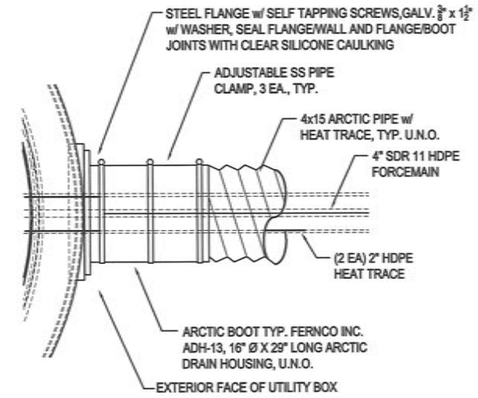

2 C5.1 PENETRATION DETAIL PLAN VIEW
NTS

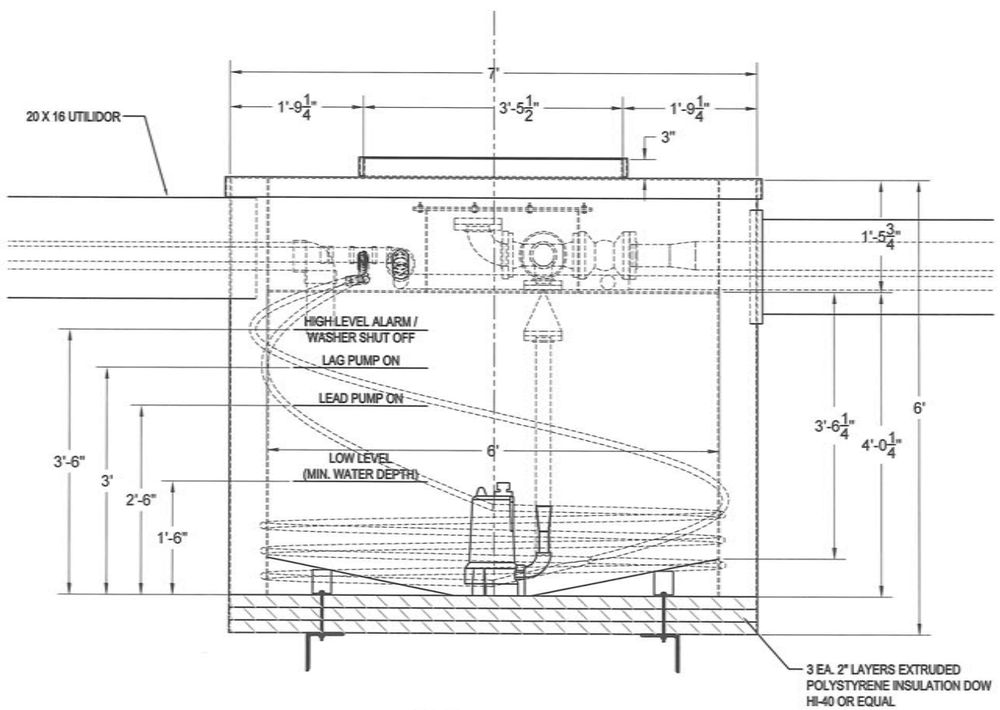

3 C5.1 ELEVATION
NTS

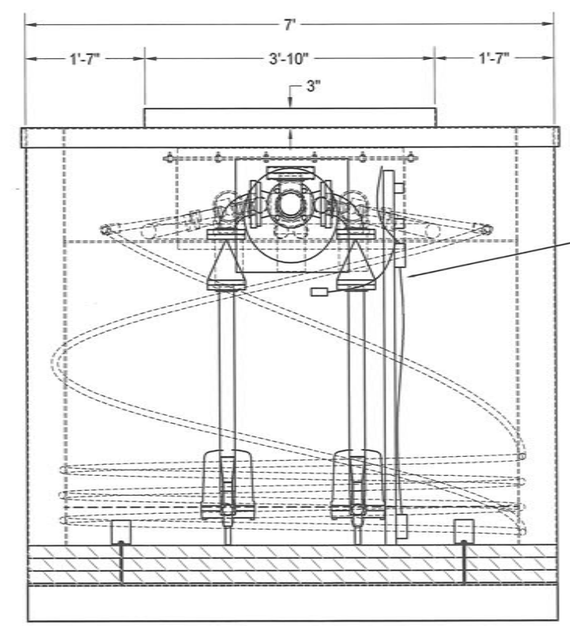

SEE LIBERTY IPD-34-511CONTROL PANEL FOR DETAILED INSTALLATION INSTRUCTIONS OF THE FOLLOWING ASSEMBLY:

- (2 EA) 6" UNISTRUT P3300 SS STRUTS w/ P115S SS PIPE CLAMPS BOLTED TO TANK RISER
- 1-1/2" SCH 80 PVC PIPE FROM TANK BOTTOM TO TANK RISER, FASTENED TO UNISTRUT
- SHIELDED 3-CONDUCTOR WIRE TO LEVEL SENSOR AND HIGH LEVEL ALARM FLOAT
- SENSOR TUBE TY-WRAPED TO PVC PIPE (DO NOT PINCH TUBE)
- LOWER LEVEL SENSOR FASTENED TO PVC PIPE WITH SS HOSE CLAMP 1" FROM BOTTOM OF TANK

4 C5.1 ELEVATION
NTS

RECORD DRAWING CERTIFICATE
THESE DRAWINGS REFLECT RECORDED INFORMATION OBTAINED DURING CONSTRUCTION. INFORMATION PROVIDED HEREIN IS ACCURATE TO THE BEST OF MY KNOWLEDGE.
NAME DATE

SCALE: AS SHOWN
BAR IS ONE INCH ON ORIGINAL DRAWING 0 1"
IF NOT ONE INCH ON THIS SHEET, ADJUST SCALES ACCORDINGLY

CONSTRUCTION RECORD
FIELD BOOK
STAKING
FOREMAN
AS-BUILT
INSPECTOR

6/25/14

STATE OF ALASKA 49TH PAUL C. WEBER CE-10276 REGISTERED PROFESSIONAL ENGINEER

WASHETERIA AND WATER TANK
LIFT STATION DETAILS
CHEFORNAK, ALASKA

CE2 ENGINEERS, INC.
PO BOX 230948 ANCHORAGE, AK 99523 PH: 907-349-1010 FAX: 907-349-1015

REVISION	BY	DATE

Project No. ____ Date MAR. 2014 Designed PCW Drawn CM Approved PCW

Sheet No. C5.1
SHEET ____ OF ____

G:\ACAD\CHEFORNAK\2013 Washeteria and Water Tank\C5.1 C5.2 C5.3 LIFT STATION DETAILS.dwg, 6/25/2014 3:14:02 PM, cmerz, \\Ce2main\LANIER MP C2050/LD520C PCL 6

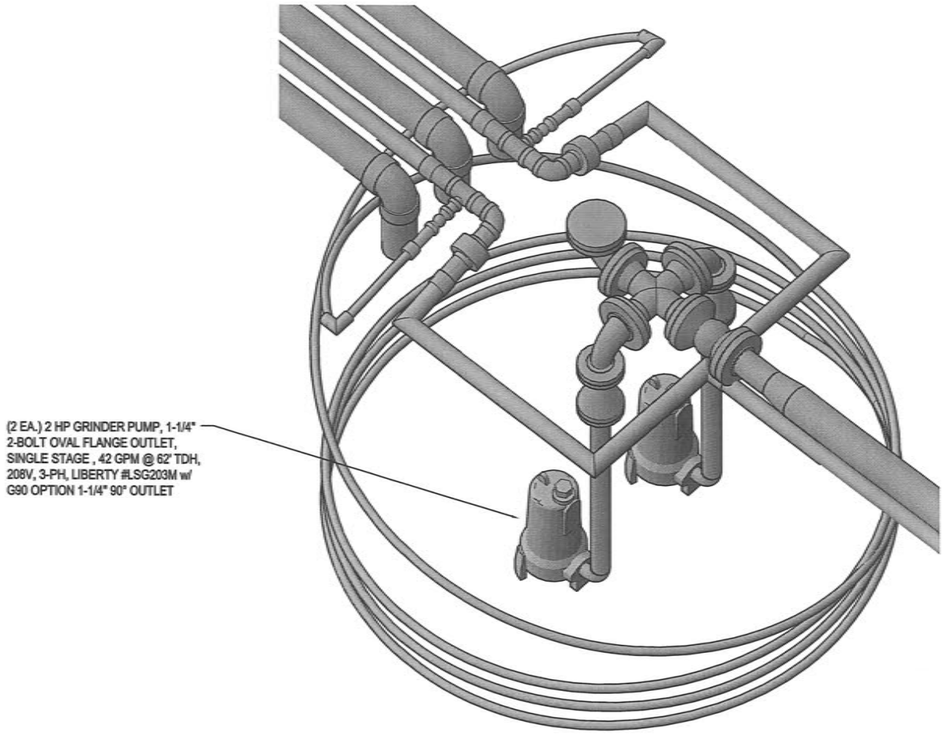

2 / C5.2 LIFT STATION PIPING
NTS

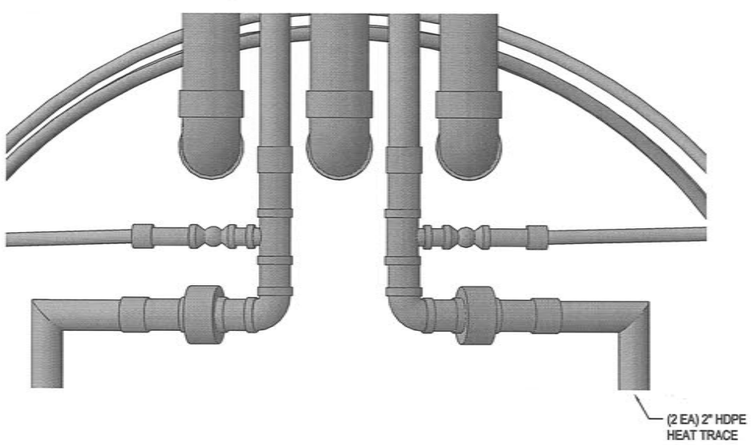

3 / C5.2 LIFT STATION HEAT TRACE ASSEMBLEY
NTS

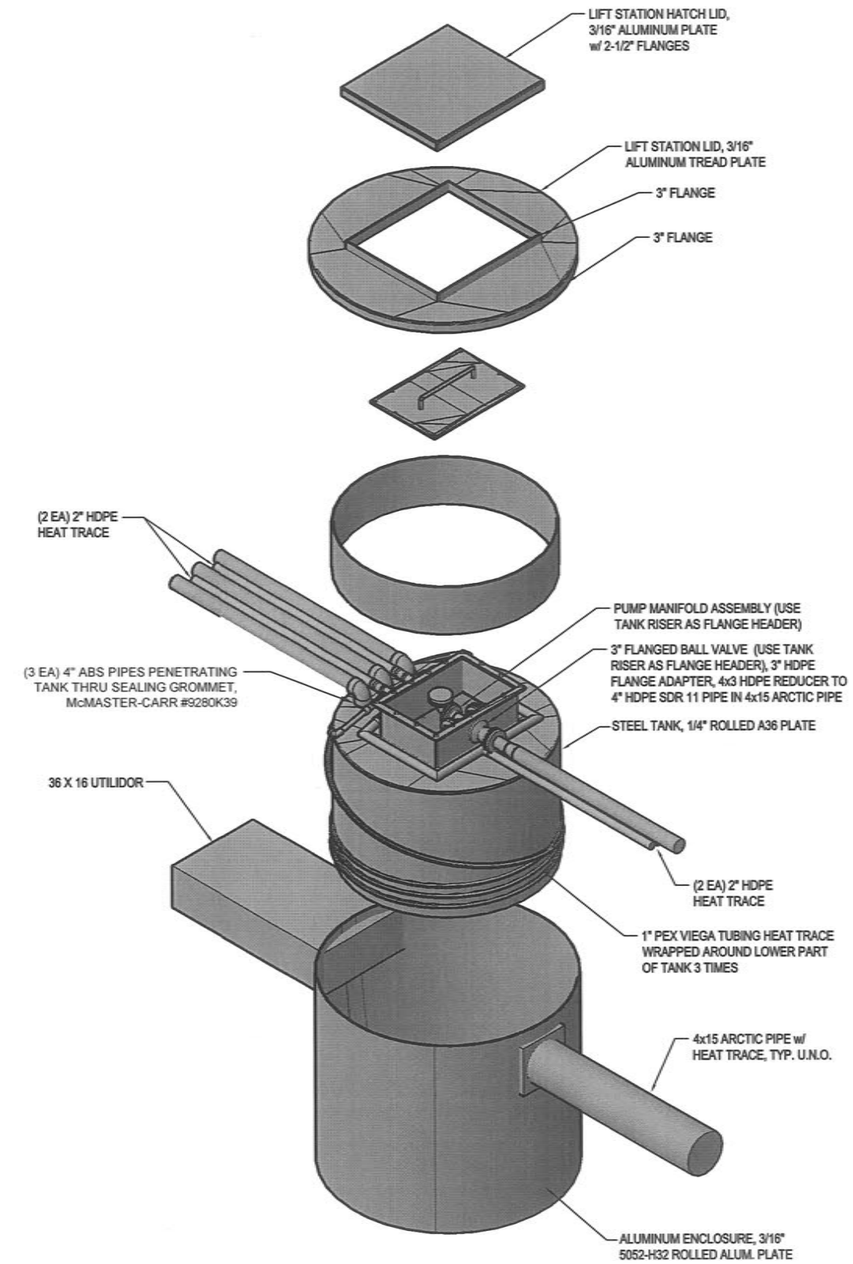

1 / C5.2 LIFT STATION EXPLODED VIEW
NTS

RECORD DRAWING CERTIFICATE
THESE DRAWINGS REFLECT RECORDED INFORMATION OBTAINED DURING CONSTRUCTION. INFORMATION PROVIDED HEREIN IS ACCURATE TO THE BEST OF MY KNOWLEDGE.
NAME DATE

SCALE: AS SHOWN
BAR IS ONE INCH ON ORIGINAL DRAWING
0 1"
IF NOT ONE INCH ON THIS SHEET, ADJUST SCALES ACCORDINGLY

CONSTRUCTION RECORD
FIELD BOOK
STAKING
FOREMAN
AS-BUILT
INSPECTOR

6/26/14
STATE OF ALASKA 4938 PAUL C. WEBNER CE-10276 REGISTERED PROFESSIONAL ENGINEER

WASHETERIA AND WATER TANK
LIFT STATION
CHEFORNAK, ALASKA

CE2 ENGINEERS, INC.
PO BOX 223646 ANCHORAGE, AK 99523 PH: 907-349-1015 FAX: 907-349-1015

REVISION	BY	DATE

Project No. ____
Date MAR. 2014
Designed ____
Drawn ____
Approved PCW

Sheet No. C5.2
SHEET ____ OF ____

G:\ACAD\CHEFORNAK\2013 Washeteria and Water Tank\C5.1 C5.2 C5.3 LIFT STATION DETAILS_recover.dwg, 6/25/2014 12:47:17 PM, cmerz, \\Ce2main\LANIER MP C2050/LD520C PCL 6

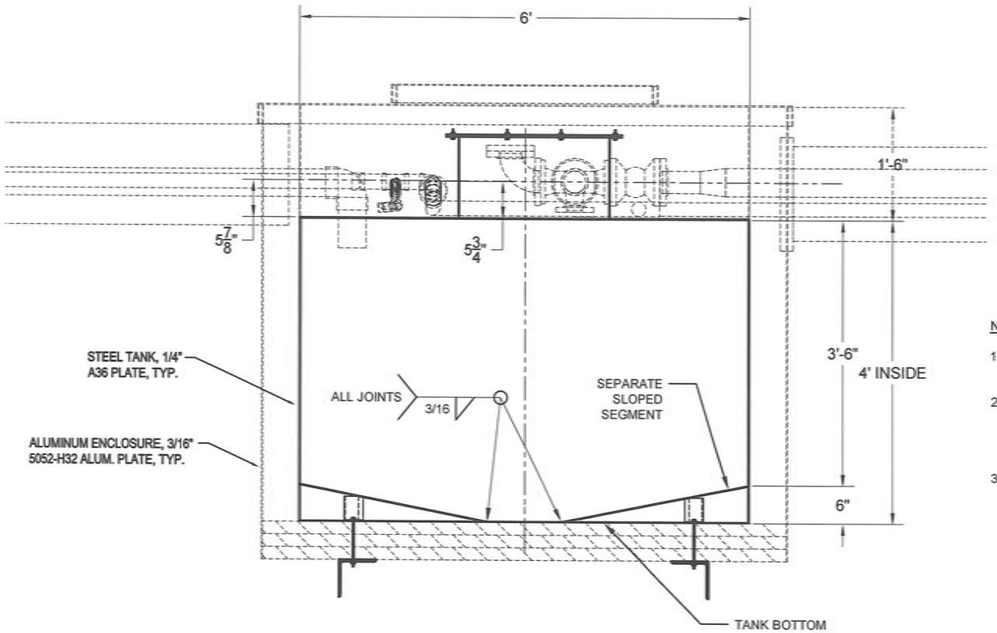

3 C5.3 STEEL TANK SECTION
NTS

NOTES:

1. ALL TANK MATERIAL SHALL BE A36 STEEL PLATE, 1/4" THICK, U.N.O.
2. INSIDE OF TANK SHALL BE COATED WITH CARBOLINE BITUMASTIC 50 IN 1 COAT, 18 MIL MIN. THICKNESS,PREP STEEL PER MANUFACTURE'S PRODUCT DATA SHEET
3. COAT OUTSIDE OF TANK WITH RED PRIMER.

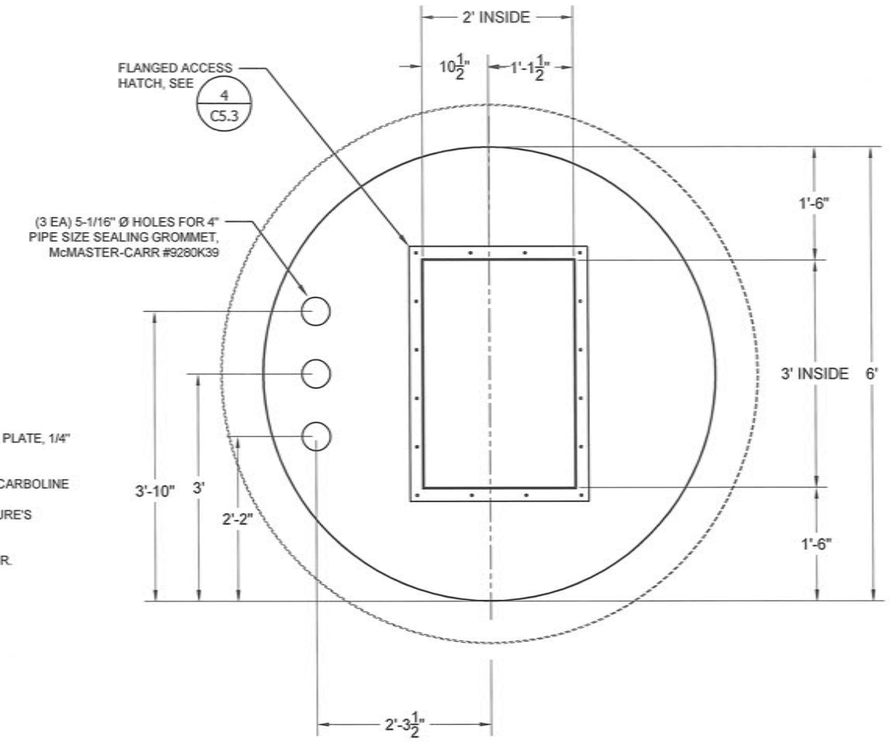

1 C5.3 TANK TOP
NTS

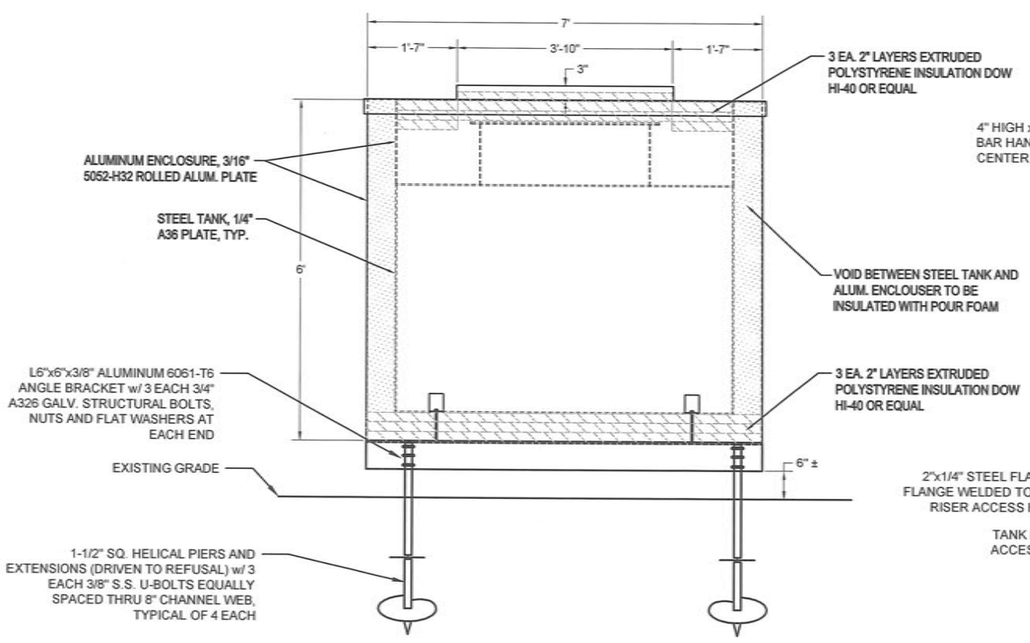

5 C5.3 LIFT STATION ENCLOSURE SECTION
NTS

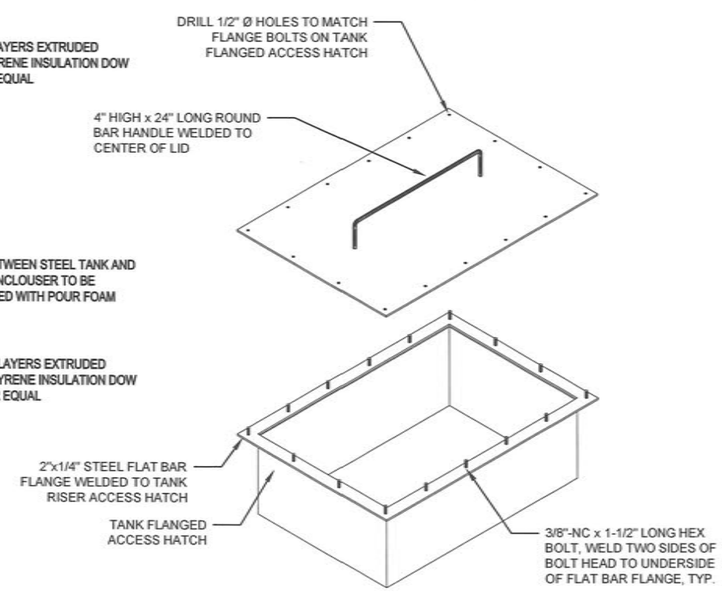

4 C5.3 STEEL TANK LID AND FLANGED HATCH
NTS

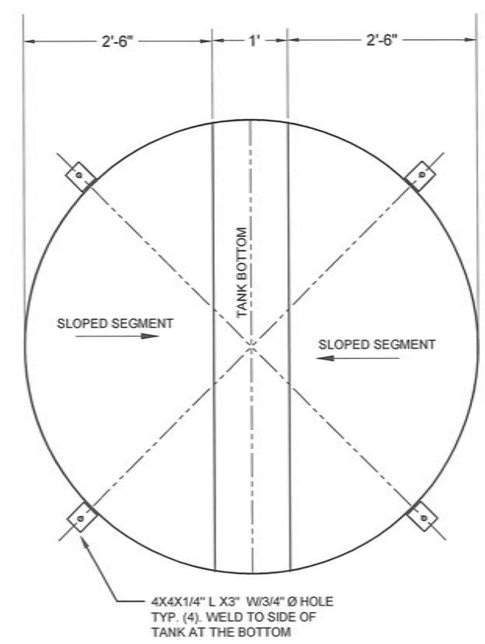

2 C5.3 TANK TOP
NTS

RECORD DRAWING CERTIFICATE
THESE DRAWINGS REFLECT RECORDED INFORMATION OBTAINED DURING CONSTRUCTION. INFORMATION PROVIDED HEREIN IS ACCURATE TO THE BEST OF MY KNOWLEDGE.
NAME DATE

SCALE: AS SHOWN
BAR IS ONE INCH ON ORIGINAL DRAWING
0 1"
IF NOT ONE INCH ON THIS SHEET, ADJUST SCALES ACCORDINGLY

CONSTRUCTION RECORD
FIELD BOOK
STAKING
FOREMAN
AS-BUILT
INSPECTOR

6/26/14
STATE OF ALASKA 49TH PAUL C. WEBER CE-10276 REGISTERED PROFESSIONAL ENGINEER

WASHETERIA AND WATER TANK
LIFT STATION TANK
CHEFORNAK, ALASKA

CE2 ENGINEERS, INC.
PO BOX 232948 ANCHORAGE, AK 99523 PH: 907-349-1010 FAX: 907-349-1015

REVISION	BY	DATE

Project No. ____ Date MAR. 2014
Designed ____
Drawn ____
Approved PCW

Sheet No. C5.3
SHEET ____ OF ____

G:\ACAD\CHEFORNAK\2013 Washeteria and Water Tank\C5.1 C5.2 C5.3 LIFT STATION DETAILS_recover.dwg, 6/25/2014 12:47:34 PM, cmerz, \\Ce2main\LANIER MP C2050/LD520C PCL 6

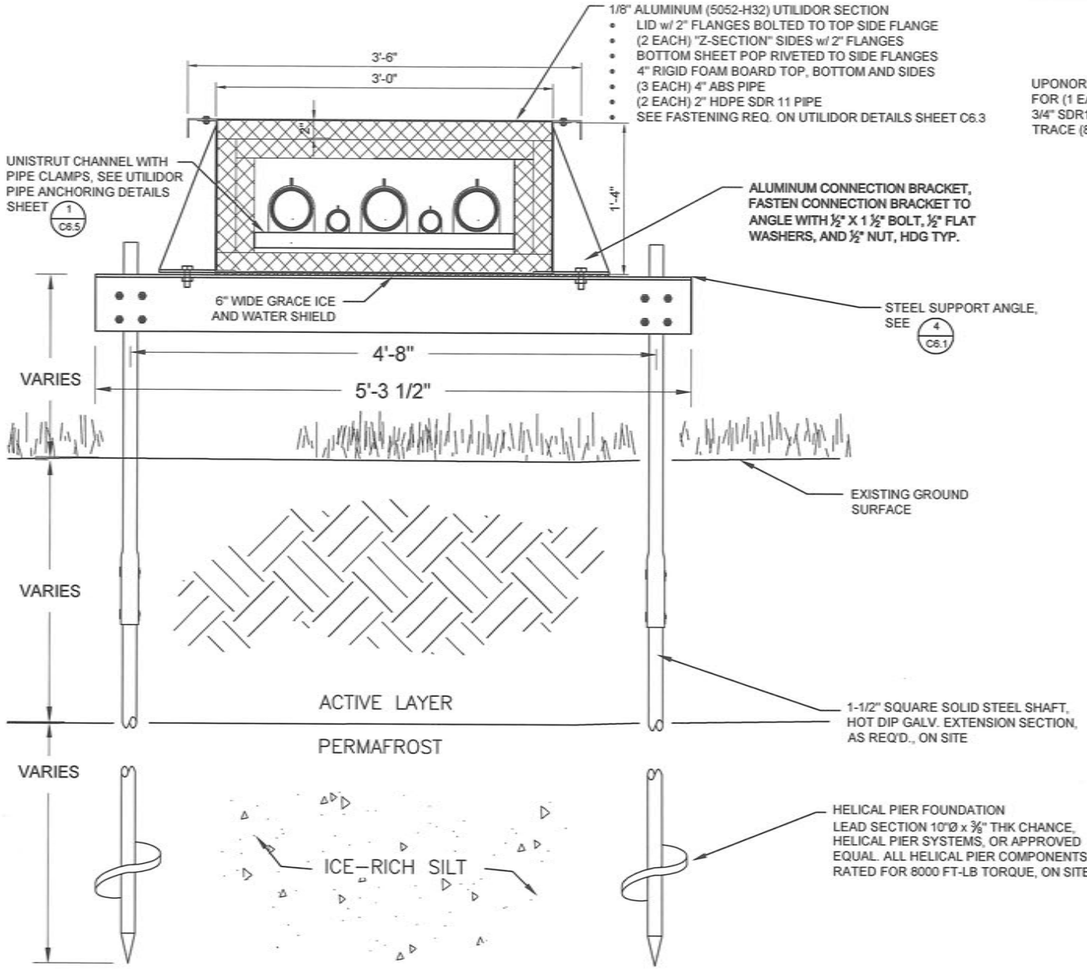

3 C6.1 NTS SEWER UTILIDOR AND HELICAL PIER SUPPORT DETAILS

NOTES:

1. REMOVE ALL ORGANIC MATERIAL 6-10" BENEATH THE 4x12 SLEEPERS AND REPLACE WITH ADOT TYPE C-1 MATERIAL.
2. STACK UP TO 2 SLEEPERS AS FIELD REQUIRED.
3. UTILIDOR SLEEPER SUPPORTS WILL BE PLACED EVERY 6' O.C.
4. PROVIDE INSULATING GASKETS AND/OR COATINGS BETWEEN DISSIMILAR METALS, TYP.

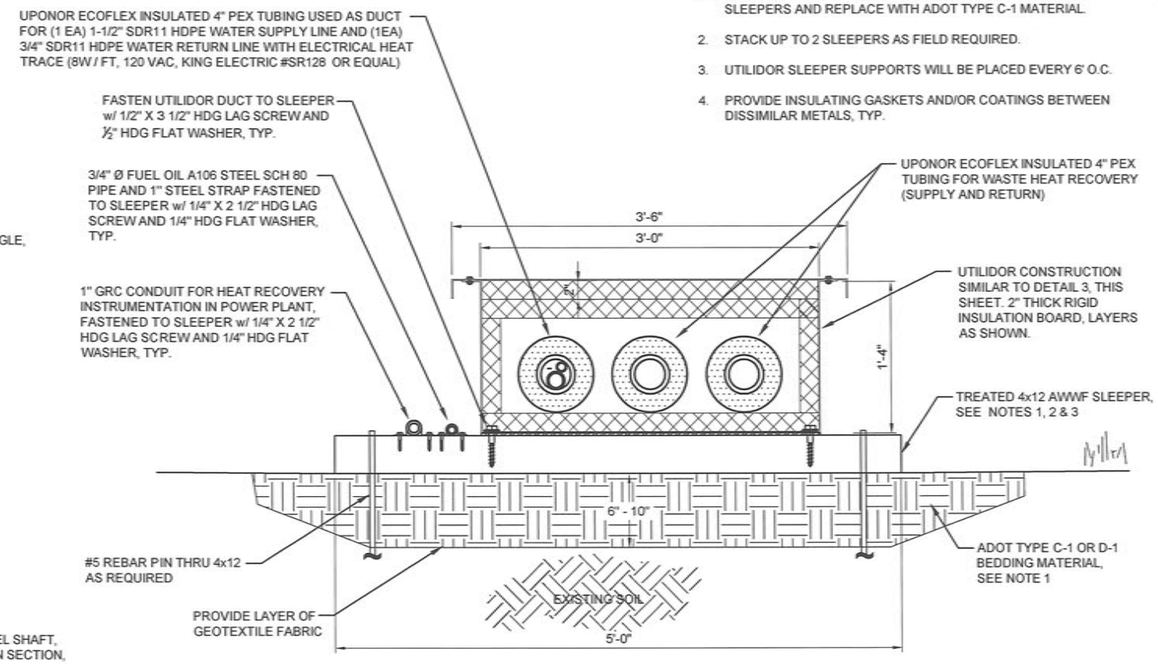

1 C6.1 NTS WATER AND WASTE HEAT DUCT SLEEPER SUPPORT DETAILS

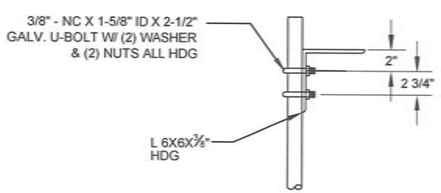

4 C6.1 NTS STEEL SUPPORT ANGLE DETAILS

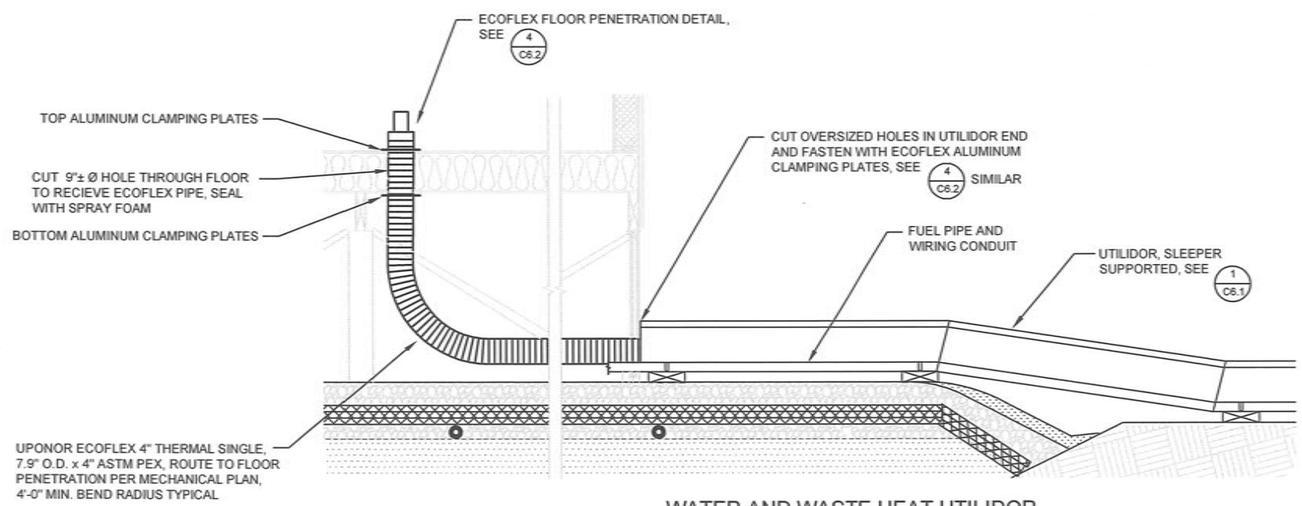

2 C6.1 NTS WATER AND WASTE HEAT UTILIDOR TO WASHETERIA / POWER PLANT

RECORD DRAWING CERTIFICATE
THESE DRAWINGS REFLECT RECORDED INFORMATION OBTAINED DURING CONSTRUCTION. INFORMATION PROVIDED HEREIN IS ACCURATE TO THE BEST OF MY KNOWLEDGE.
NAME DATE

SCALE: AS SHOWN
BAR TO THE INCH ON ORIGINAL DRAWING 0 1"
IF NOT ONE INCH ON THIS SHEET, ADJUST SCALES ACCORDINGLY

CONSTRUCTION RECORD
FIELD BOOK
STAKING
FOREMAN
AS-BUILT
INSPECTOR

STATE OF ALASKA 49TH PAUL C. WEBNER CE-10276 REGISTERED PROFESSIONAL ENGINEER
6/24/14

WASHETERIA AND WATER TANK
UTILIDOR / PIPE SUPPORT DETAILS
CHEFORNAK, ALASKA

CE2 ENGINEERS, INC.
PO BOX 230968 ANCHORAGE, AK 99523 PH: 907-349-1010 FAX: 907-349-1015

REVISION	BY	DATE

Project No. ____ Date MAR. 2014
Designed PCW
Drawn CM
Approved PCW

Sheet No. C6.1
SHEET ____ OF ____

G:\ACAD\CHEFORNAK\2013 Washeteria and Water Tank\C6.1 Utilidor Details.dwg, 6/25/2014 2:16:52 PM, cmerz, \\Ce2main\LANIER MP C2050/LD520C PCL 6

NOTES:

1. REMOVE ALL ORGANIC MATERIAL 6-10" BENEATH THE 4x12 SLEEPERS AND REPLACE WITH ADOT TYPE C-1 MATERIAL.
2. STACK UP TO 2 SLEEPERS AS FIELD REQUIRED.
3. UTILIDOR SLEEPER SUPPORTS WILL BE PLACED EVERY 6' O.C.

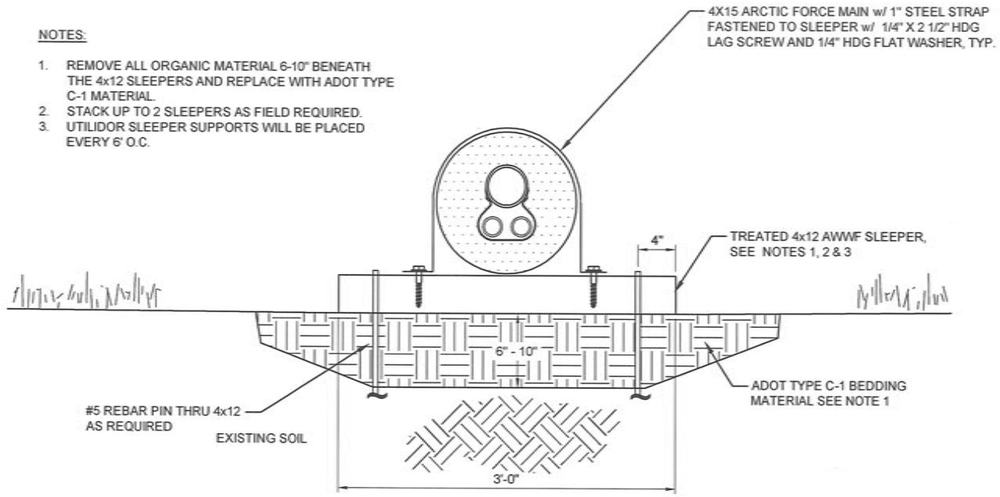

1 / C6.2 4X15 ARCTIC PIPE FORCE MAIN SLEEPER SUPPORT
SCALE: NTS

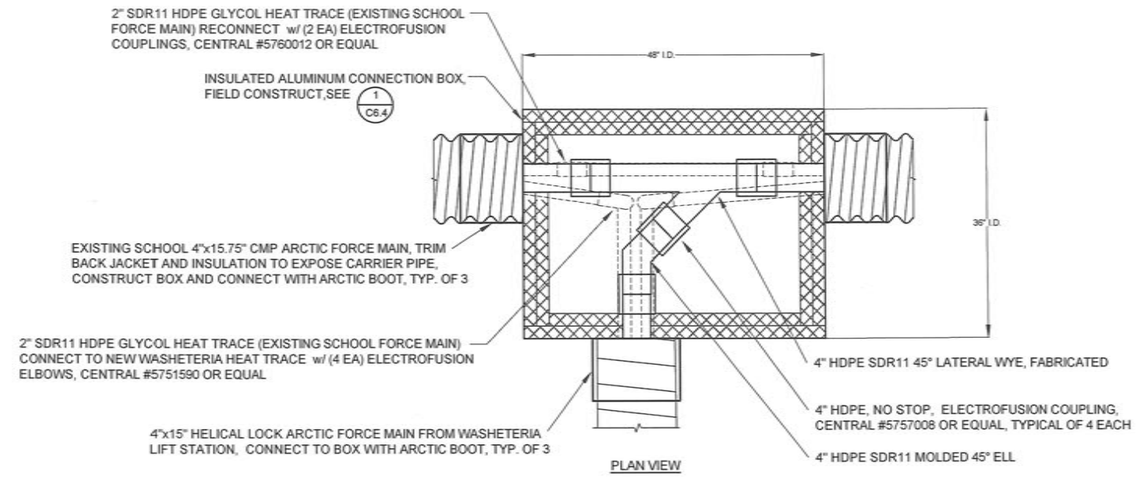

2 / C6.2 CONNECTION TO EXISTING SCHOOL FORCE MAIN
SCALE: NTS

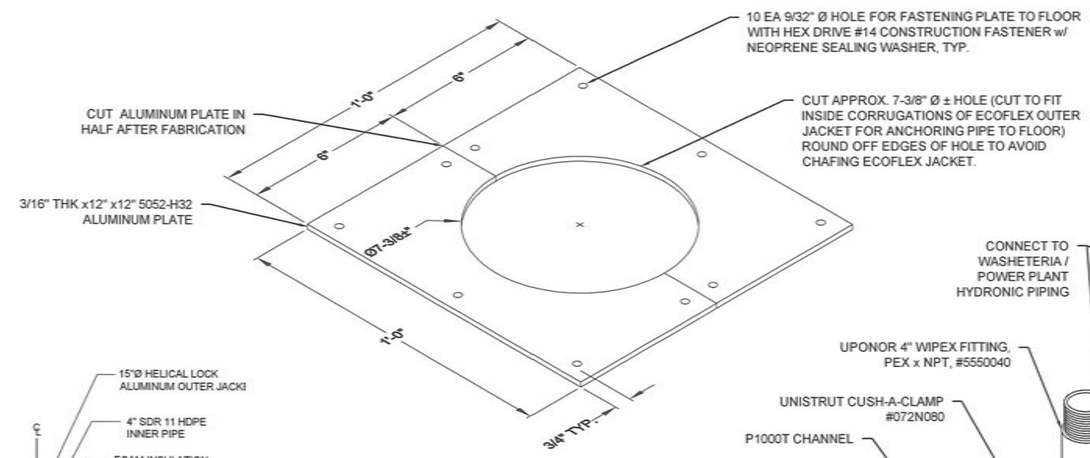

ECOFLEX ALUMINUM CLAMPING PLATES DETAIL

DOUBLE COMBO WYE TABLE		
NOMINAL SIZE	CORE PIPE O.D.	NOM. OUTER JACKET O.D.
4"	4.5"	15"

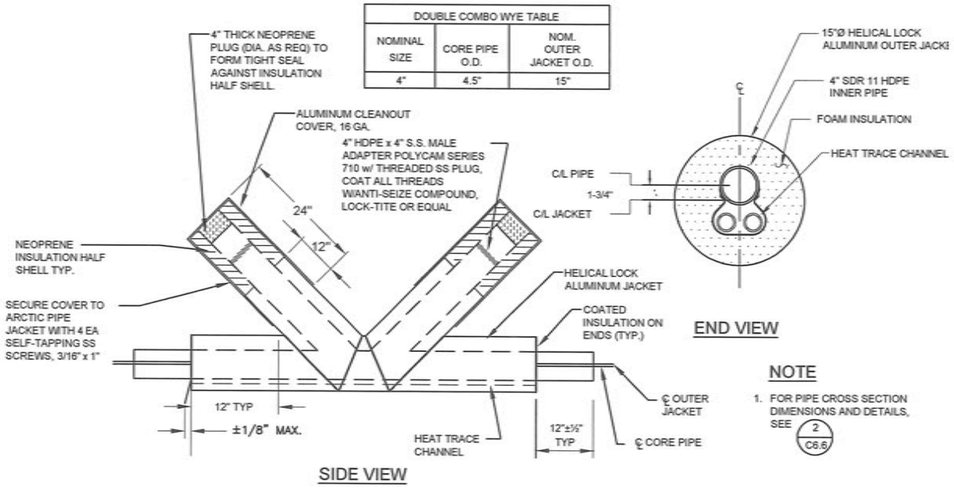

NOTE

1. FOR PIPE CROSS SECTION DIMENSIONS AND DETAILS, SEE 2 / C6.6

3 / C6.2 4X15 ARCTIC PIPE w/ DBL 4X12 CLEANOUT DETAIL
SCALE: NTS

NOTE:

1. ALL PART NUMBERS ARE UNISTRUT, U.N.O.

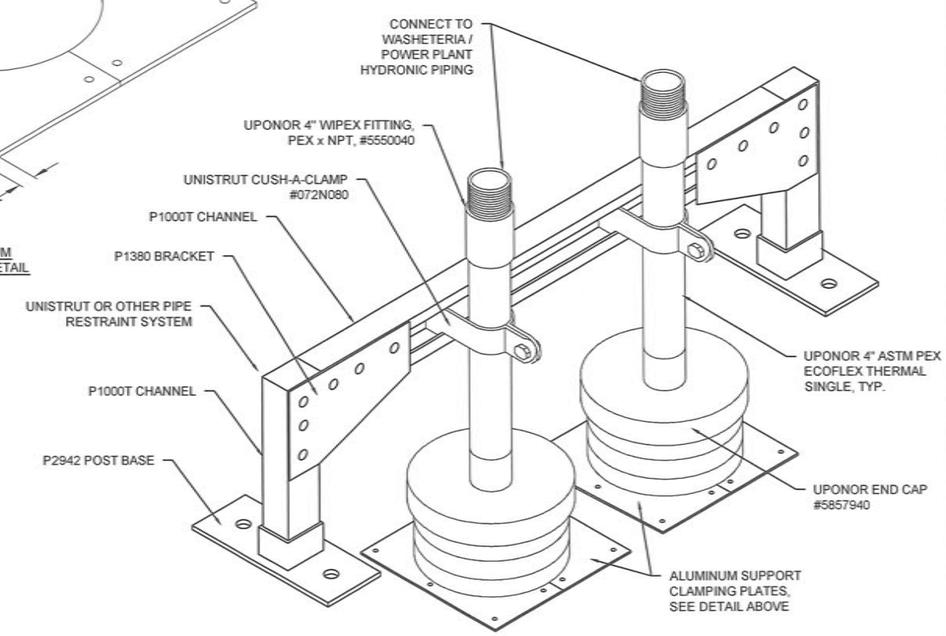

4 / C6.2 ECOFLEX FLOOR PENETRATION DETAIL
SCALE: NTS

RECORD DRAWING CERTIFICATE
THESE DRAWINGS REFLECT RECORDED INFORMATION OBTAINED DURING CONSTRUCTION. INFORMATION PROVIDED HEREIN IS ACCURATE TO THE BEST OF MY KNOWLEDGE.
NAME DATE

SCALE: AS SHOWN
BAR IS ONE INCH ON ORIGINAL DRAWING 0 1"
IF NOT ONE INCH ON THIS SHEET, ADJUST SCALES ACCORDINGLY

CONSTRUCTION RECORD
FIELD BOOK
STAKING
FOREMAN
AS-BUILT
INSPECTOR

STATE OF ALASKA 4938 PAUL C. WEBER CE-10276 REGISTERED PROFESSIONAL ENGINEER
6/25/14

WASHETERIA AND WATER TANK
FORCE MAIN AND PIPE DETAILS
CHEFORNAK, ALASKA

CE2 ENGINEERS, INC.
PO BOX 230946 ANCHORAGE, AK 99523 PH: 907-349-1010 FAX: 907-349-1015

REVISION	BY	DATE

Project No. ____ Date MAR. 2014 Designed PCW Drawn DDR Approved PCW

Sheet No. C6.2
SHEET ____ OF ____

G:\ACAD\CHEFORNAK\2013 Washeteria and Water Tank\C6.2 FORCEMAIN AND PIPE DETAILS.dwg, 6/25/2014 2:17:11 PM, cmerz, \\Ce2main\LANIER MP C2050/LD520C PCL 6

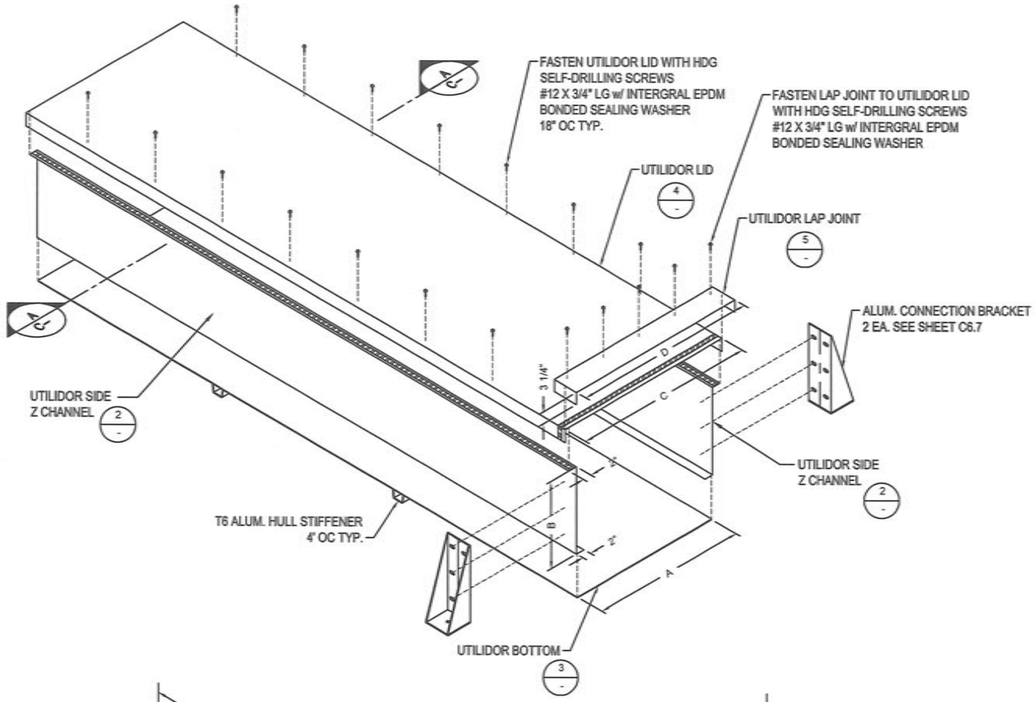

1 C6.3 UTILIDOR ISOMETRIC NTS

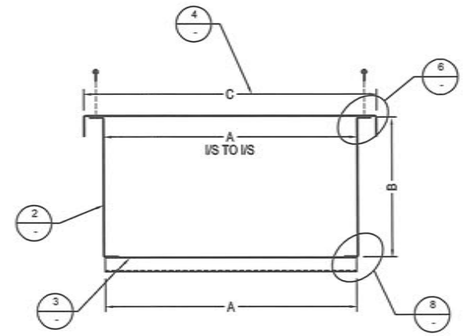

A C6.3 UTILIDOR SECTION NTS

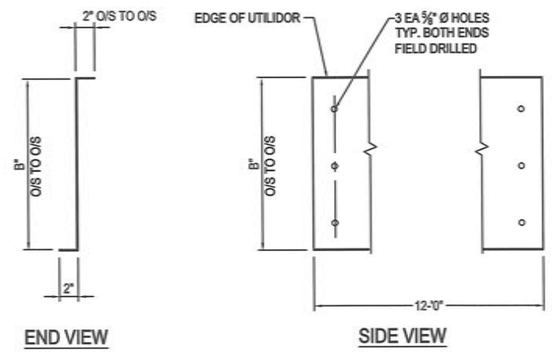

2 C6.3 SIDE Z-CHANNEL DETAILS NTS

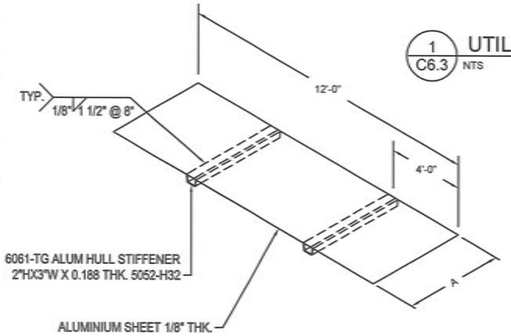

3 C6.3 BOTTOM SHEET DETAIL NTS

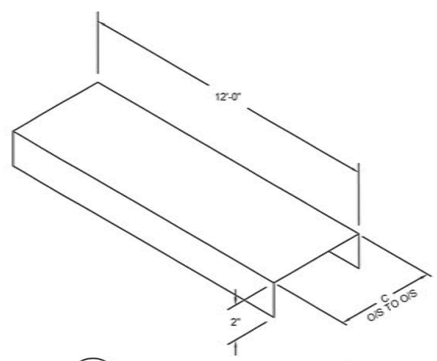

4 C6.3 UTILIDOR LID DETAIL NTS

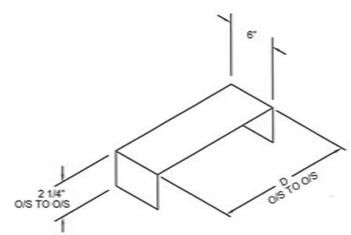

5 C6.3 UTILIDOR LAP JOINT NTS

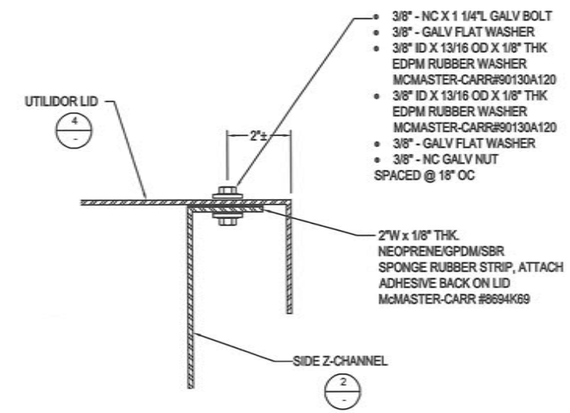

6 C6.3 TOP CORNER DETAILS NTS

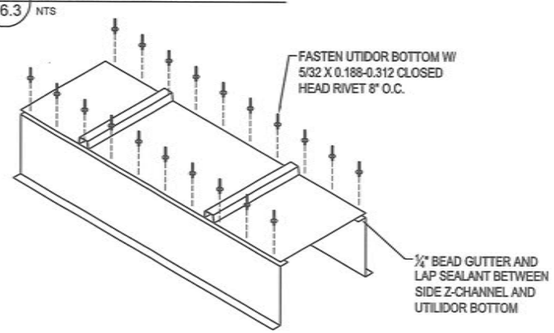

7 C6.3 BOTTOM FASTENING DETAILS NTS

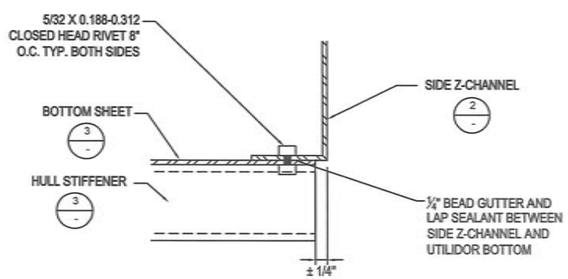

8 C6.3 BOTTOM CORNER DETAILS NTS

NOTE:

1. ALL ALUMINIUM SHALL BE 5052 1/8" THICK, UNLESS OTHERWISE NOTED.
2. BOTTOM OF UTILIDOR WILL BE SEALED W/ BUTUAL ACETATE GUTTER AND LAP SEALANT 1/4" BEAD.
3. FASTEN UTILIDOR BOTTOM W/ RIVETS BEFORE INSTALLING ALUMINIUM HULL STIFFENERS.

RECORD DRAWING CERTIFICATE
THESE DRAWINGS REFLECT RECORDED INFORMATION OBTAINED DURING CONSTRUCTION. INFORMATION PROVIDED HEREIN IS ACCURATE TO THE BEST OF MY KNOWLEDGE.
NAME DATE

SCALE: AS SHOWN
BARS ONE INCH ON ORIGINAL DRAWING 0 1"
IF NOT ONE INCH ON THIS SHEET, ADJUST SCALES ACCORDINGLY

CONSTRUCTION RECORD
FIELD BOOK
STAKING
FOREMAN
AS-BUILT
INSPECTOR

STATE OF ALASKA 49TH PAUL C. WEBNER CE-10276 REGISTERED PROFESSIONAL ENGINEER

WASHETERIA AND WATER TANK
UTILIDOR DETAILS
CHEFORNAK, ALASKA

CE2 ENGINEERS, INC.
PO BOX 232948 ANCHORAGE, AK 99523 PH: 907-349-1019 FAX: 907-349-1015

REVISION	BY	DATE

Project No. ____ Date MAR. 2014
Designed PCW
Drawn CM
Approved PCW

Sheet No. C6.3
SHEET ____ OF ____

G:\ACAD\CHEFORNAK\2013 Washeteria and Water Tank\C6.3 Utilidor Details 2.dwg, 6/25/2014 2:26:56 PM, cmerz, \\Ce2main\LANIER MP C2050/LD520C PCL 6

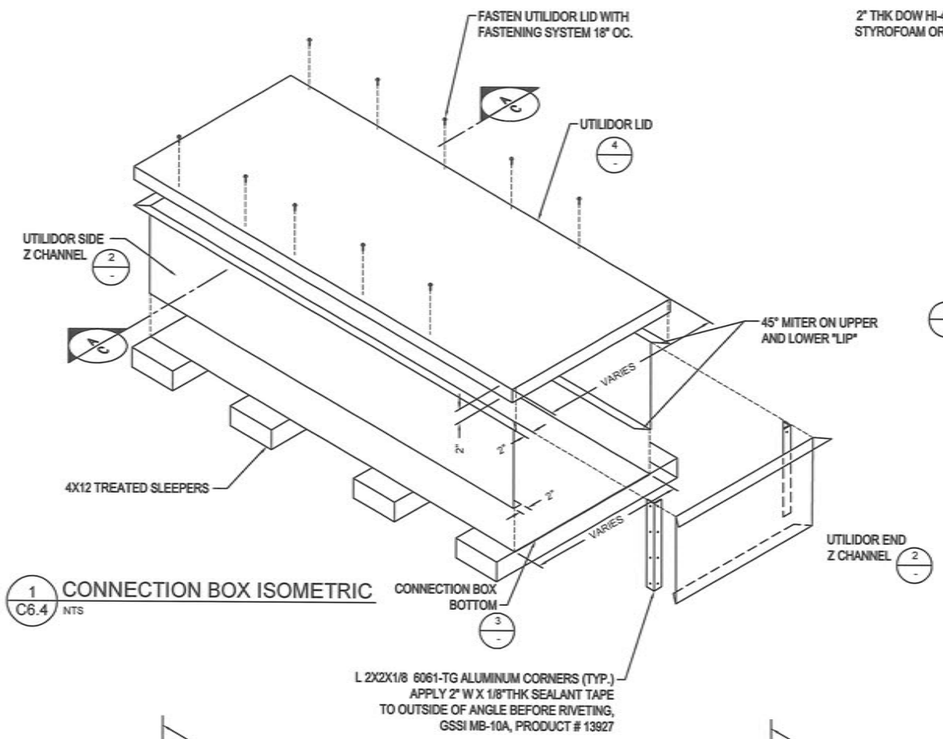

1 / C6.4 CONNECTION BOX ISOMETRIC
NTS

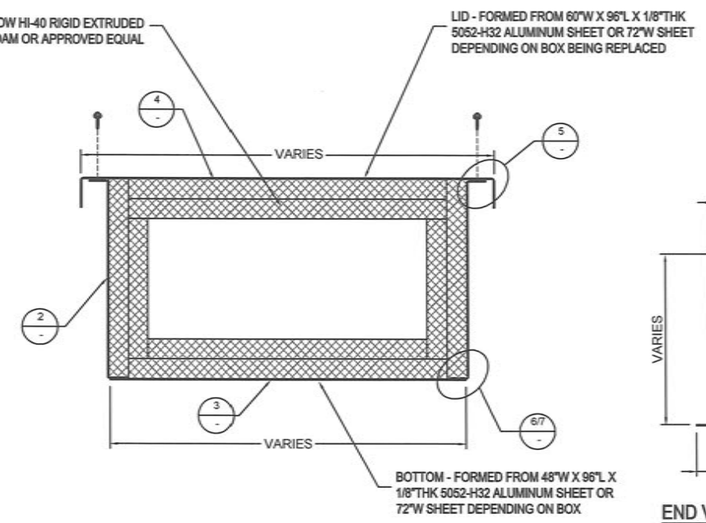

A / C6.4 CONNECTION BOX SECTION
NTS

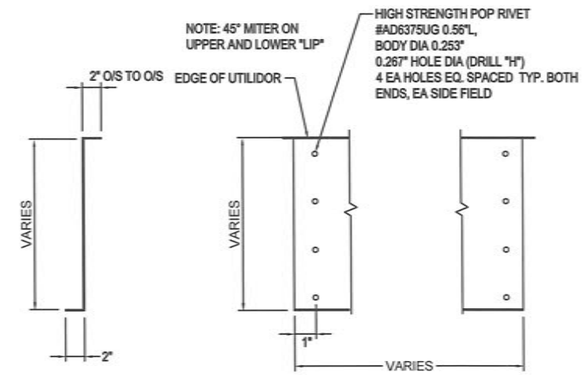

2 / C6.4 SIDE & END Z-CHANNEL DETAILS
NTS

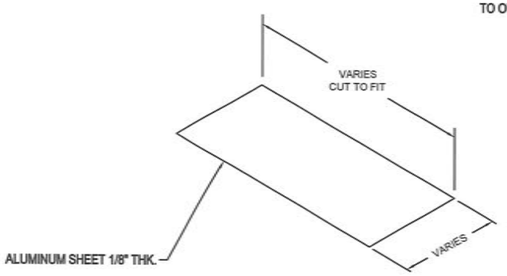

3 / C6.4 BOTTOM SHEET DETAIL
NTS

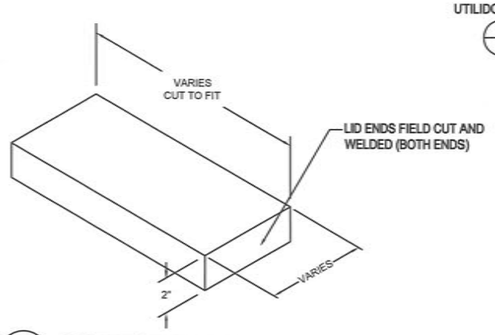

4 / C CONNECTION BOX LID DETAIL
NTS

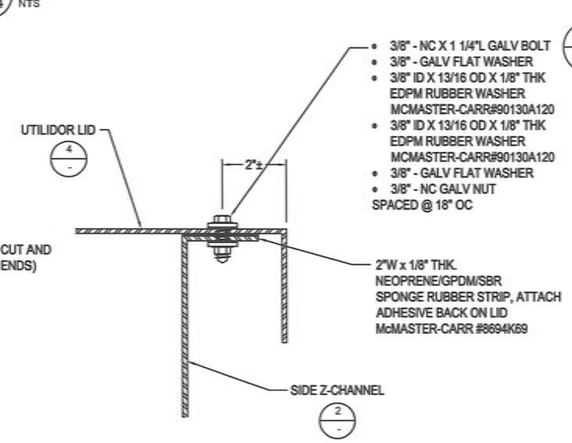

5 / C6.4 TOP BOLTED DETAIL
NTS

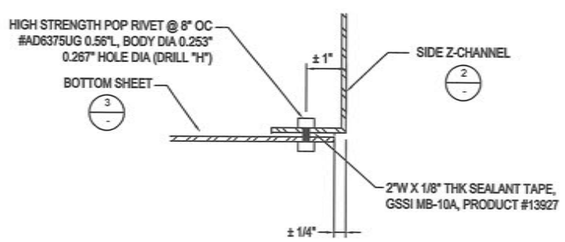

6 / C6.4 BASE SEAM DETAIL (EXCEPT AT SLEEPERS)
NTS

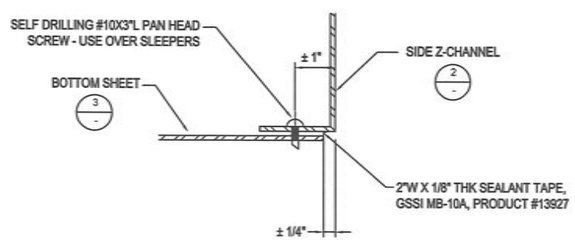

7 / C6.4 BASE SEAM DETAIL (AT SLEEPERS)
NTS

NOTE:

1. ALL ALUMINUM SHALL BE 5052-H32 1/8" THICK, UNLESS OTHERWISE NOTED.
2. BOTTOM OF UTILIDOR WILL BE SEALED W/ 2"W X 1/8" THK SEALANT TAPE, GSSI MB-10A, PRODUCT #13927

RECORD DRAWING CERTIFICATE
THESE DRAWINGS REFLECT RECORDED INFORMATION OBTAINED DURING CONSTRUCTION. INFORMATION PROVIDED HEREIN IS ACCURATE TO THE BEST OF MY KNOWLEDGE.
NAME DATE

SCALE: AS SHOWN
BAR IS ONE INCH ON ORIGINAL DRAWING
0 1"
IF NOT ONE INCH ON THIS SHEET, ADJUST SCALES ACCORDINGLY

CONSTRUCTION RECORD
FIELD BOOK
STAKING
FOREMAN
AS-BUILT
INSPECTOR

6/26/14
STATE OF ALASKA
49TH
PAUL C. WEBBER
CE-10276
REGISTERED PROFESSIONAL ENGINEER

2013 WATER DISTRIBUTION AND WATERING POINTS
CONNECTION BOX DETAILS
CHEFORNAK, ALASKA

CE2 ENGINEERS, INC.
PO BOX 223948 ANCHORAGE, AK 99523 PH: 907-349-1010 FAX: 907-349-1015

REVISION	BY	DATE

Project No. ____
Date APRIL 2013
Designed PCW
Drawn LAW
Approved PCW

Sheet No. C6.4
SHEET ____ OF ____

G:\ACAD\CHEFORNAK\2013 Washeteria and Water Tank\C6.4 CONNECTION BOX DETAILS.dwg, 6/25/2014 2:26:44 PM, cmerz, \\Ce2main\LANIER MP C2050/LD520C PCL 6

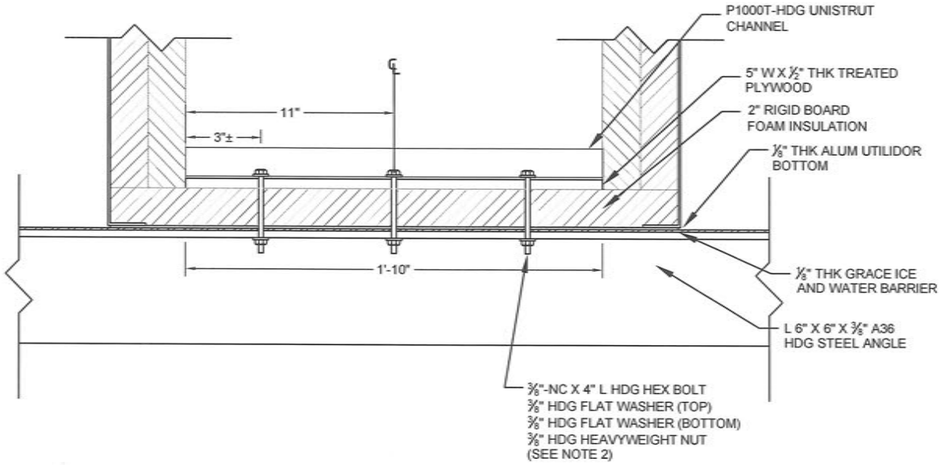

1 / C6.5 PIPE ANCHOR ASSEMBLY FASTENER LAYOUT
NTS

NOTES:

1. PLACE PIPE ANCHOR ASSEMBLY EVERY OTHER UTILIDOR SECTION (12' ± O.C.), AND BEFORE AND AFTER EACH UTILIDOR JUMP.
2. WHEN CONNECTING TO 4X12 SLEEPER REPLACE WITH ⅜" X 6" HDG LAG SCREW AND ⅜" HDG FLAT WASHER.
3. INSULATION AND PIPE CLAMPS NOT SHOWN ON FASTENER LAYOUT FOR CLARITY

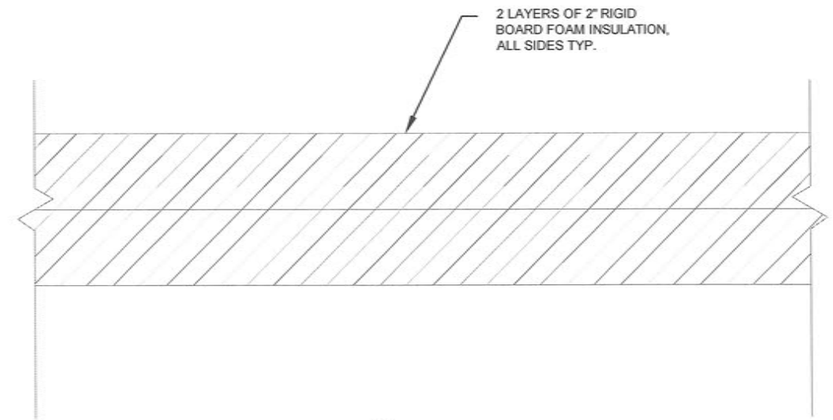

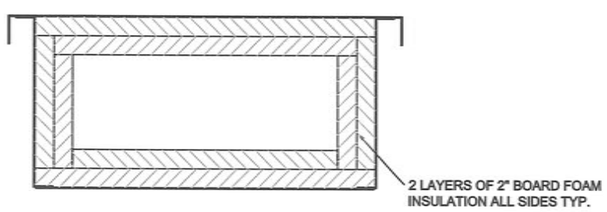

2 / C6.5 TYPICAL INSULATION LAYOUT
NTS

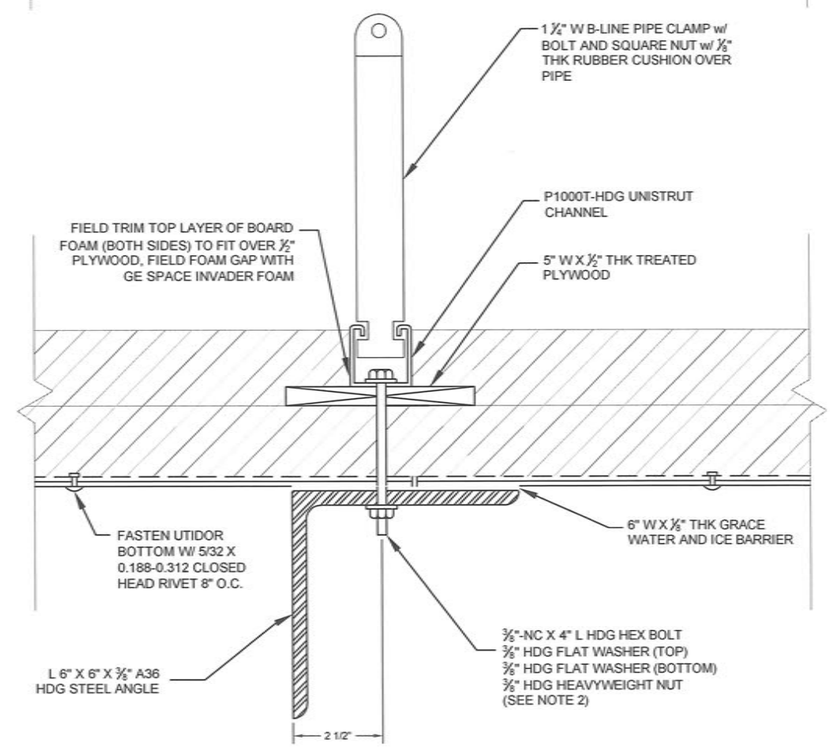

3 / C6.5 PIPE ANCHOR ASSEMBLY TYPICAL SECTION
NTS

RECORD DRAWING CERTIFICATE
THESE DRAWINGS REFLECT RECORDED INFORMATION OBTAINED DURING CONSTRUCTION. INFORMATION PROVIDED HEREIN IS ACCURATE TO THE BEST OF MY KNOWLEDGE.
NAME DATE

SCALE: AS SHOWN
BAR IS ONE INCH ON ORIGINAL DRAWING 0 1"
IF NOT ONE INCH ON THIS SHEET, ADJUST SCALES ACCORDINGLY

CONSTRUCTION RECORD
FIELD BOOK
STAKING
FOREMAN
AS-BUILT
INSPECTOR

6/26/14
STATE OF ALASKA 49TH PAUL C. WEBNER CE-10276 REGISTERED PROFESSIONAL ENGINEER

WASHETERIA AND WATER TANK
UTILIDOR PIPE ANCHORING DETAILS
CHEFORNAK, ALASKA

CE2 ENGINEERS, INC.
PO BOX 232048 ANCHORAGE, AK 99523 PH: 907-349-1019 FAX: 907-349-1015

REVISION	BY	DATE

Project No. ____ Date MAR. 2014 Designed PCW Drawn CM Approved PCW

Sheet No. C6.5
SHEET ____ OF ____

G:\ACAD\CHEFORNAK\2013 Washeteria and Water Tank\C6.5 Utilidor Pipe Anchor Details.dwg, 6/25/2014 2:26:28 PM, cmerz, \\Ce2main\LANIER MP C2050/LD520C PCL 6

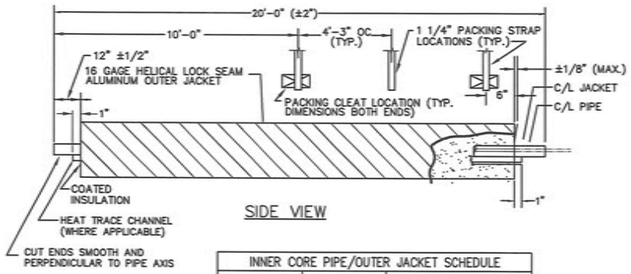

INNER CORE PIPE/OUTER JACKET SCHEDULE		
NOMINAL CORE PIPE DIA.	INNER CORE PIPE O.D.	NOMINAL OUTER JACKET DIA.
4 INCH	4.50"	12 INCH
4 INCH	4.50"	15 INCH
8 INCH	8.625"	18 INCH

1 C6.6 HDPE ARCTIC PIPE TYPICAL
N.T.S.

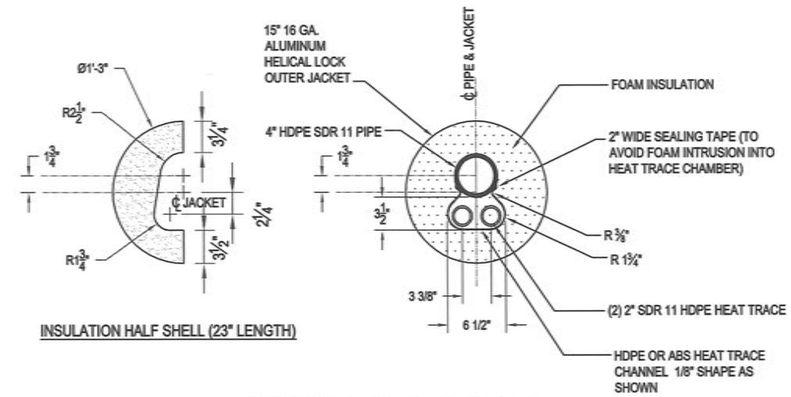

2 C6.6 4" X 15" HDPE ARCTIC PIPE CROSS SECTION - GLYCOL TRACED
N.T.S.

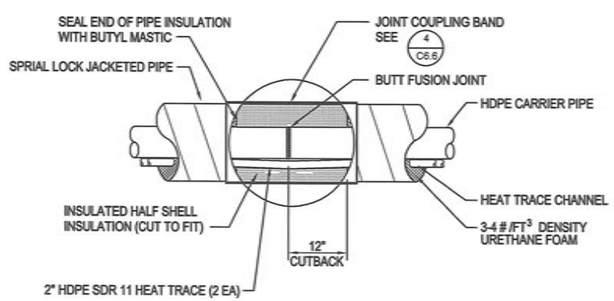

3 C6.6 TYPICAL BUTT FUSION JOINT
N.T.S.

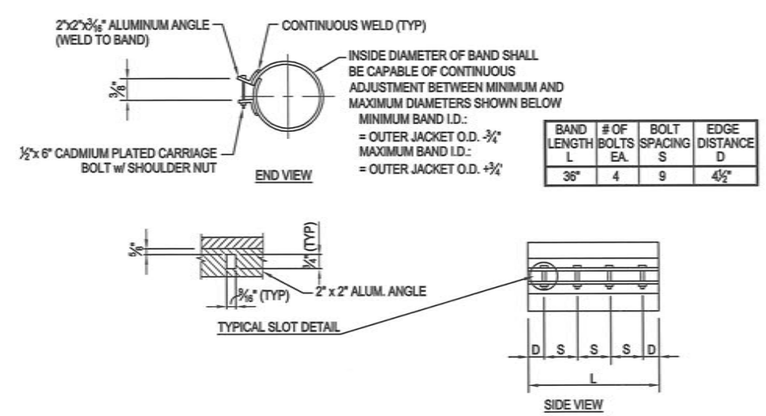

BAND LENGTH L	# OF BOLTS EA.	BOLT SPACING S	EDGE DISTANCE D
36"	4	9	4 1/2"

4 C6.6 ARCTIC PIPE COUPLING BAND
N.T.S.

RECORD DRAWING CERTIFICATE
THESE DRAWINGS REFLECT RECORDED INFORMATION OBTAINED DURING CONSTRUCTION. INFORMATION PROVIDED HEREIN IS ACCURATE TO THE BEST OF MY KNOWLEDGE.
NAME DATE

SCALE: AS SHOWN
BAR IS ONE INCH ON ORIGINAL DRAWING
0 1"
IF NOT ONE INCH ON THIS SHEET, ADJUST SCALES ACCORDINGLY

CONSTRUCTION RECORD
FIELD BOOK
STAKING
FOREMAN
AS-BUILT
INSPECTOR

6/26/14
STATE OF ALASKA 49TH PAUL C. WEBNER CE-10276 REGISTERED PROFESSIONAL ENGINEER

WASHETERIA AND WATER TANK
ARTIC PIPE DETAILS
CHEFORNAK, ALASKA

CE2 ENGINEERS, INC.
PO BOX 223948 ANCHORAGE, AK 99523 PH: 907-349-1010 FAX: 907-349-1015

REVISION	BY	DATE

Project No. ____
Date MAR. 2014
Designed PCW
Drawn CM
Approved PCW

Sheet No. C6.6
SHEET ____ OF ____

G:\ACAD\CHEFORNAK\2013 Washeteria and Water Tank\C6.6 ARCTIC PIPE DETAILS.dwg, 6/25/2014 2:26:09 PM, cmerz, \\Ce2main\LANIER MP C2050/LD520C PCL 6

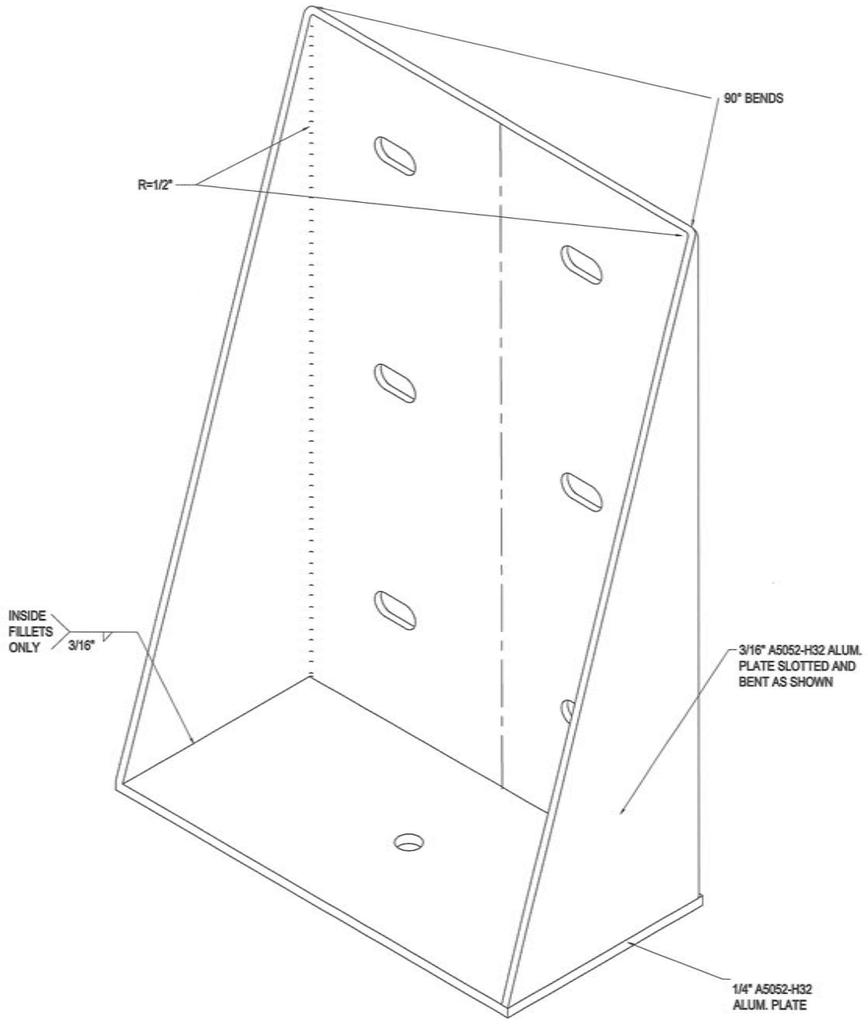

ISOMETRIC VIEW

1 C6.7 UTILIDOR CONNECTION BRACKET ISOMETRIC
NTS

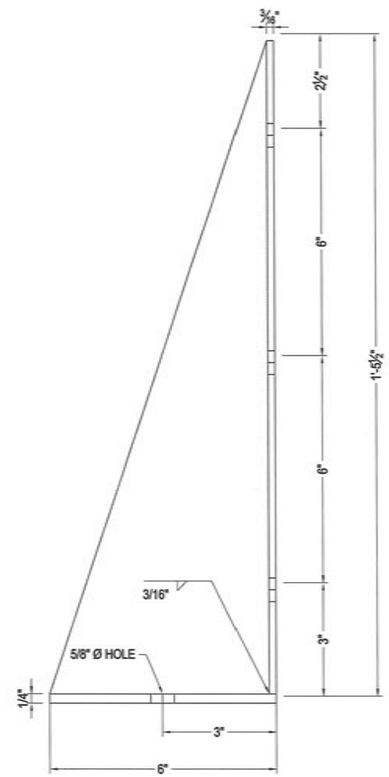

SIDE VIEW

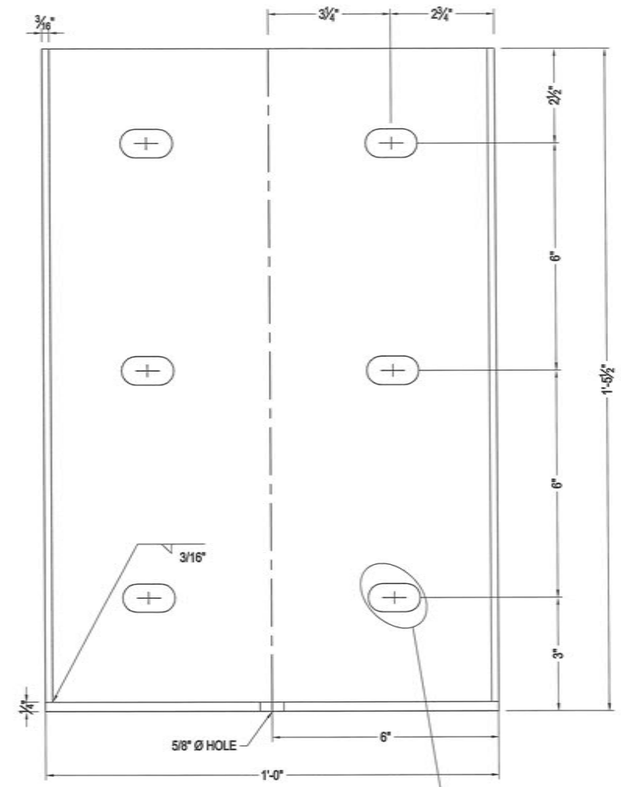

FRONT VIEW

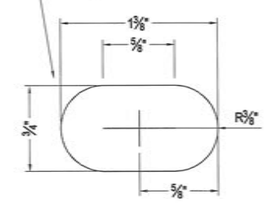

EXPANSION SLOT DETAIL

2 C6.7 UTILIDOR CONNECTION BRACKET DETAILS
NTS

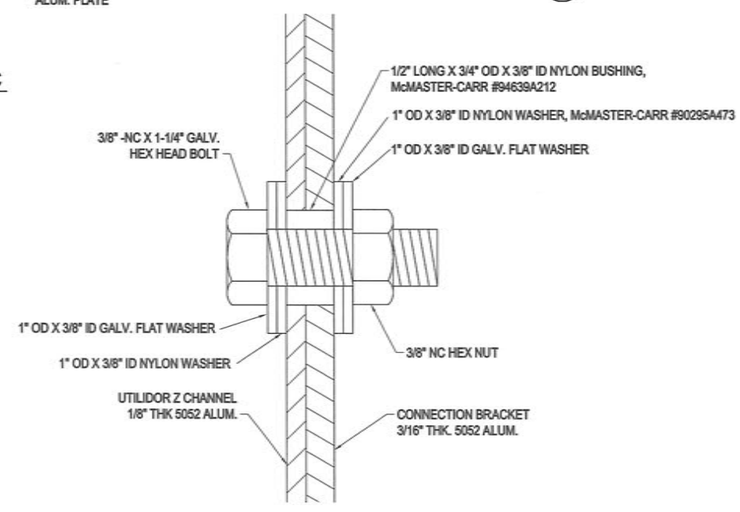

3 C6.7 EXPANSION FASTENING DETAILS
NTS

RECORD DRAWING CERTIFICATE
THESE DRAWINGS REFLECT RECORDED INFORMATION OBTAINED DURING CONSTRUCTION. INFORMATION PROVIDED HEREIN IS ACCURATE TO THE BEST OF MY KNOWLEDGE.
NAME DATE

SCALE: AS SHOWN

BAR IS ONE INCH ON ORIGINAL DRAWING
0 1"
IF NOT ONE INCH ON THIS SHEET, ADJUST SCALE ACCORDINGLY

CONSTRUCTION RECORD
FIELD BOOK
STAKING
FOREMAN
AS-BUILT
INSPECTOR

10/20/14
STATE OF ALASKA 4938 PAUL C. WEBNER CE-10276 REGISTERED PROFESSIONAL ENGINEER

WASHETERIA AND WATER TANK
UTILIDOR CONNECTION BRACKET DETAILS
CHEFORNAK, ALASKA

CE2 ENGINEERS, INC.
PO BOX 223948 ANCHORAGE, AK 99523 PH: 907-349-1010 FAX: 907-349-1015

REVISION	BY	DATE

Project No. ____
Date MAR. 2014
Designed DWB
Drawn MM
Approved PCW

Sheet No. C6.7
SHEET ____ OF ____

G:\ACAD\CHEFORNAK\2013 Washeteria and Water Tank\C6.7 Utilidor Bracket Details.dwg, 6/25/2014 2:20:32 PM, cmerz, \\Ce2main\LANIER MP C2050/LD520C PCL 6

CODE ANALYSIS

PROJECT: CHEFORNAK WASHETERIA

APPLICABLE CODES:

INTERNATIONAL BUILDING CODE	2009 EDITION
INTERNATIONAL MECHANICAL CODE	2009 EDITION
NATIONAL ELECTRICAL CODE	2008 EDITION
UNIFORM PLUMBING CODE	2007 EDITION
INTERNATIONAL FIRE CODE	2009 EDITION
INTERNATIONAL FUEL GAS CODE	2009 EDITION
ADA – ACCESSIBILITY GUIDELINES FOR BUILDINGS AND FACILITIES	2009 EDITION

CONSTRUCTION TYPE: V-B

BUILDING OCCUPANCY: B (LAUNDRY)
S-1 (STORAGE)

GROSS BUILDING AREA: 1,512 S.F.

BASIC ALLOWABLE HEIGHT AND AREA PER TABLE 503

ALLOWABLE AREA: 9,000 S.F. (B) – NO AREA INCREASE CALCULATIONS MADE
9,000 S.F. (S-1) – NO AREA INCREASE CALCULATIONS MADE

OCCUPANCY SEPARATION PER 508.3.2 NON-SEPARATED OCCUPANCIES

NO SEPARATION REQUIRED.

INCIDENTAL USE AREA SEPARATION (PER 508.2.5 & TABLE 508.2.5)

BOILER ROOM EQUIPMENT ROOM <5 PSI AND 10 HP

FURNACE < 400,000 BTU

NO RATED WALLS REQUIRED

PLUMBING FIXTURES (CHAPTER 29)

BASED ON HIGHEST DEMAND OF B OCCUPANCY

OCCUPANTS:

LAUNDRY B OCC. : 705 ÷100 SF/OCC. = 7.05

S OCC. : 389÷ 500 = .78

TOTAL OCCUPANT LOAD = 7.82 = 8 OCC.

PER 2902.2 SEPARATE FACILITIES EXCEPTION 2

SEPARATE FACILITIES FOR EACH SEX NOT REQUIRED SINCE TOTAL EMPLOYEE AND CUSTOMER COUNT IS LESS THAN 15.
TWO SEPARATE FACILITIES ARE PROVIDED.
DRINKING FOUNTAIN NOT REQUIRED WITH OCC. LOAD LESS THAN 15.

VENTILATION : 1203
ATTIC VENT : 1/300 OF AREA W/ 50 % 3'-0" ABOVE EAVE VENT AND 50 % AT EAVE W/ 363 S.I. AT EAVE AND .363 S.I. AT RIDGE.
TOTAL AREA REQUIRED AT EAVE AND RIDGE = 725.76 S.I.

GLASS SCHEDULE

TYPE (A) TRIPLE PANE INSULATED GLASS W/ TINTED VISION EXTERIOR & CLEAR INTERIOR.

TYPE (B) 1" THICK TEMPERED INSULATED GLASS W/ TINTED VISION EXTERIOR & CLEAR INTERIOR.

TYPE (C) ¾" TEMPERED GLASS, INTERIOR ONLY

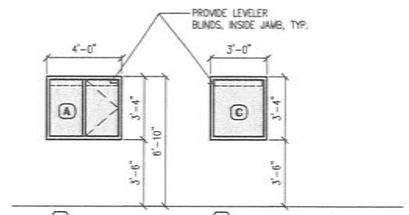

4 WINDOW SCHEDULE
SCALE: 1/4"=1'-0"

DOOR NOTES:
- PROVIDE THERMAL BREAK THRESHOLD AT ALL EXTERIOR DOORS
- PROVIDE WEATHER SEALS AND BOTTOM SWEEP AT ALL EXTERIOR DOORS.

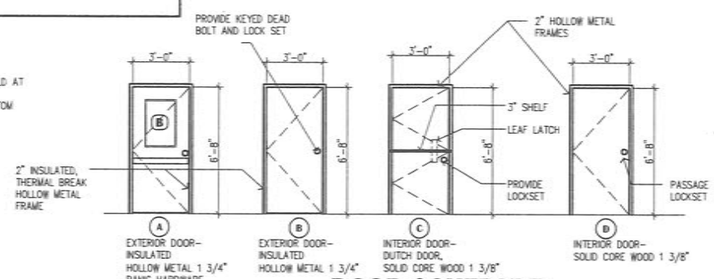

3 DOOR SCHEDULE
SCALE: 1/4"=1'-0"

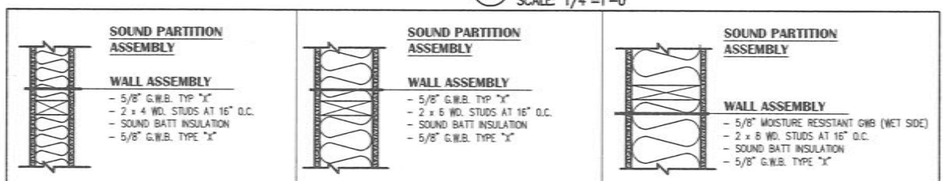

WALL TYPES–GENERAL NOTES:
1. WET SIDE OF WALL REFERS TO TOILET/SHOWER ROOMS AND LAUNDRY ROOMS
2. ALL GWB TO BE TYPE 'X'
3. CONTRACTOR TO PROVIDE BACKING AS REQUIRED FOR ALL WALL MOUNTED FIXTURES AND EQUIPMENT. BACKING NOT IDENTIFIED IN WALL TYPES, COORDINATE W/ INTERIOR ELEVATIONS AND MANUFACTURER CUT SHEETS.

2 WALL TYPES
SCALE: 1"=1'-0"

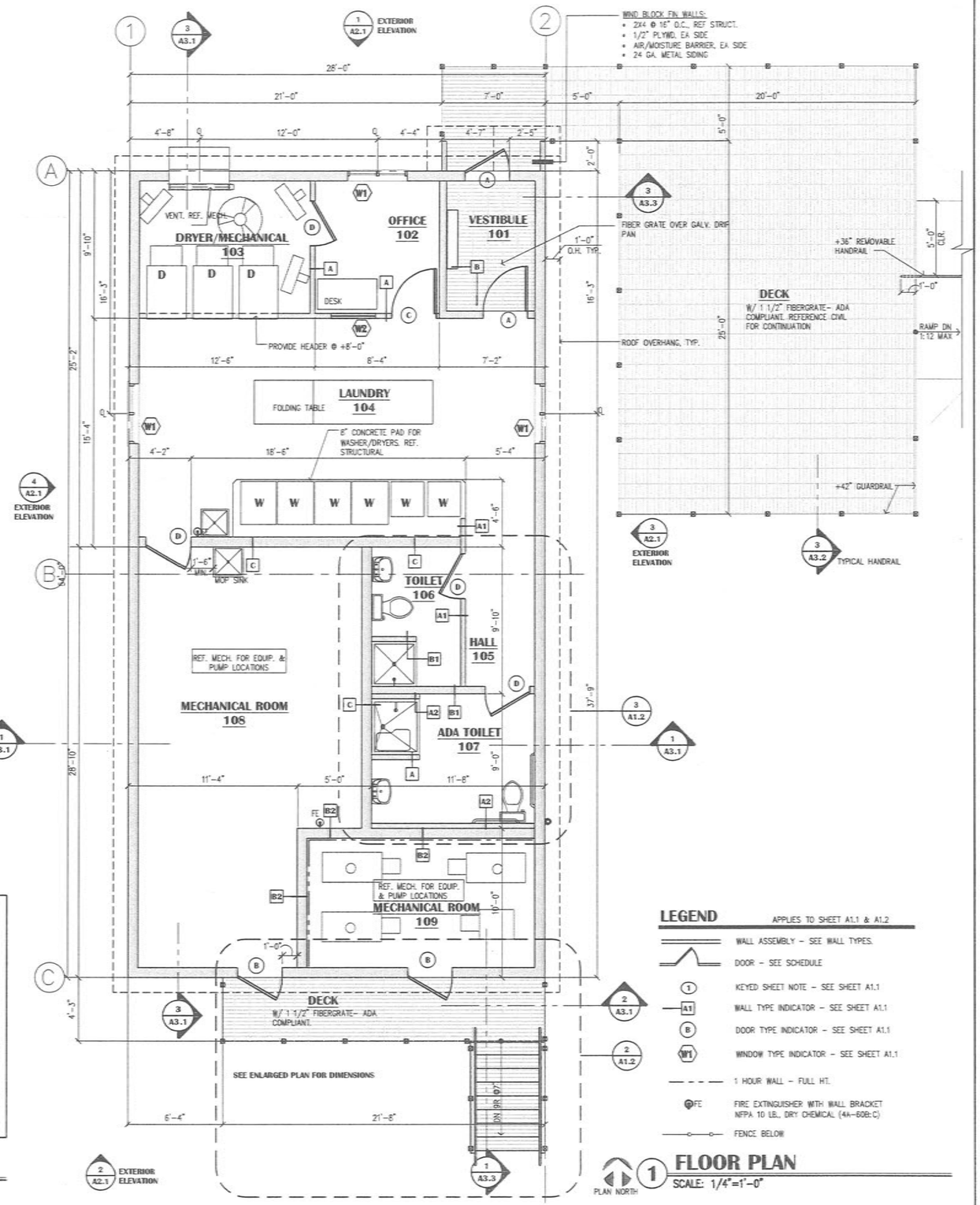

1 FLOOR PLAN
SCALE: 1/4"=1'-0"

LEGEND APPLIES TO SHEET A1.1 & A1.2

- WALL ASSEMBLY – SEE WALL TYPES.
- DOOR – SEE SCHEDULE
- (1) KEYED SHEET NOTE – SEE SHEET A1.1
- (A1) WALL TYPE INDICATOR – SEE SHEET A1.1
- (B) DOOR TYPE INDICATOR – SEE SHEET A1.1
- (W1) WINDOW TYPE INDICATOR – SEE SHEET A1.1
- 1 HOUR WALL – FULL HT.
- (FE) FIRE EXTINGUISHER WITH WALL BRACKET NFPA 10 LB., DRY CHEMICAL (4A–60B:C)
- FENCE BELOW

REVIEW DOCUMENTS

Avision ARCHITECTURE
1231 Gambell Ste. 400
Anchorage, Alaska 99501
907-349-1425

SCALE: AS SHOWN

DRAWING WIDTH ORIGINAL DRAWING 0 1"
IF NOT ONE INCH ON THIS SHEET, ADJUST SCALES ACCORDINGLY

CONSTRUCTION RECORD
FIELD BOOK
STAKING
FOREMAN
AS-BUILT
INSPECTOR

WASHETERIA AND WATER TANK

WASHETERIA FLOOR PLAN

CHEFORNAK, ALASKA

CE2 ENGINEERS, INC.
PO BOX 220248 ANCHORAGE, AK 99503 PH: 907-349-1010 FAX: 907-349-1015

REVISION	BY	DATE

Project No. ___
Date MARCH 2014
Designed BT
Drawn CV
Approved BT

Sheet No. A1.1
SHEET ___ OF ___

G:\ACAD\CHEFORNAK\2013 Washeteria and Water Tank\From Others\NvisionArch\A1.1 floor plan.dwg, 5/23/2014 11:09:05 AM, cnerz, \\CE2MAIN\LANIER MP 6001/LD360 PCL 6

ROOM FINISH SCHEDULE

NO.	ROOM NAME	FLOOR MATERIAL	FLOOR FINISH	BASE DESIGNATION	WALL "A" MATERIAL	WALL "A" FINISH	WALL "B" MATERIAL	WALL "B" FINISH	WALL "C" MATERIAL	WALL "C" FINISH	WALL "D" MATERIAL	WALL "D" FINISH	CEILING MATERIAL	CEILING FINISH	FIRE RATING	HEIGHT	REMARKS
	WALL DESIGNATIONS GENERALLY CORRESPOND TO THE FOLLOWING ROOM ELEVATIONS: "A" = NORTH "B" = EAST "C" = SOUTH "D" = WEST																
101	VESTIBULE	PLYWD	GT	RB	GWB	PT	GWB	PT	GWB	PT	GWB	PT	GWB	PT	--	--	NOTE 2, 4,
102	OFFICE	PLYWD	SV	RB	GWB	PT	GWB	PT	GWB	PT	GWB	PT	GWB	PT	--	--	NOTE 5
103	DRYER/MECHANICAL	PLYWD	SV	RB	GWB	PT	GWB	PT	GWB	PT	GWB	PT	GWB	PT	--	--	NOTE 5
104	LAUNDRY	PLYWD	SV	RB	GWB	PT	GWB	PT	GWB	PT	GWB	PT	GWB	PT	--	--	NOTE 5
105	HALL	PLYWD	SV	RB	--	--	GWB	PT	GWB	PT	GWB	PT	GWB	PT	--	8'-0"	NOTE 3, 5
106	TOILET	PLYWD	SV	CB	MRGWB	RSV/PT	MRGWB	RSV/PT	MRGWB	RSV/PT	MRGWB	RSV/PT	MRGWB	PT	--	8'-0"	NOTE 1, 3, 5
107	ADA TOILET	PLYWD	SV	CB	MRGWB	RSV/PT	MRGWB	RSV/PT	MRGWB	RSV/PT	MRGWB	RSV/PT	MRGWB	PT	--	8'-0"	NOTE 1, 3, 5
108	MECHANICAL ROOM	PLYWD	SV	RB	GWB	PT	GWB	PT	GWB	PT	GWB	PT	GWB	PT	--	--	NOTE 5
109	MECHANICAL ROOM	PLYWD	SV	RB	GWB	PT	GWB	PT	GWB	PT	GWB	PT	GWB	PT	1 HR.	--	NOTE 5

NOTES:

1. PROVIDE A 4'-0" RSV WAINSCOT.
2. PROVIDE REMOVABLE WALK OFF MATS.
3. PROVIDE CLG JOIST @16" O.C. W/ 5/8" MRGWB
4. PROVIDE WELDED SEAM, WATER TIGHT GALV. DRIP PAN- SEE 3/A3.3
5. PROVIDE T&G BIRCH UNDERLAYMENT BELOW ALL SHEET VINYL

ABBREVIATIONS:

CB	5" COVED BASE	MRGWB	MOISTURE RESISTANT GYPSUM WALL BOARD	RSV	4" H RIGID SHEET VINYL W/ PVC EDGING
FF	FACTORY FINISH				
GWB	GYPSUM WALL BOARD	PLYWD	PLY WOOD- REF STRUCT.	SV	SHEET VINYL
GT	1 1/2" FIBER GRATE ADA COMPLIANT	PT	PAINT	WD	WOOD
		RB	4" RUBBER BASE	WOM	WALK OFF MAT

KEYED SHEET NOTES

1. PERIMETER FENCE BELOW BUILDING/DECK ASSEMBLY. PROVIDE 4'-0" WIDE GATE W/ LOCKABLE CLASP, 2 LOCATIONS BELOW DECK AS IDENTIFIED ON ENLARGED PLAN.
2. GUARD RAIL - HOLD TERMINAL POST 4" BACK FROM FACE OF PLYWOOD TO ALLOW FOR METAL SIDING INSTALLATION.

FIXTURE SCHEDULE

REFERS TO SHEETS A1.2 AND A1.3

- A GRAB BAR - 42" (ADA COMPLIANT-HORIZONTALLY MOUNTED)
- B GRAB BAR - 36" (ADA COMPLIANT-HORIZONTALLY MOUNTED)
- C GRAB BAR 18" (ADA COMPLIANT-VERTICALLY MOUNTED)
- D ADA TOILET
- E STANDARD TOILET
- F ADA 42"x42" SHOWER SURROUND W/ INTEGRAL FLOOR
- G STANDARD 36"x36" SHOWER SURROUND W/ INTEGRAL FLOOR
- H ADA FOLDING SHOWER SEAT
- I 24"x36" MIRROR W/ 1" EDGE - LOCATE ABOVE LAVATORY
- J PIPE PROTECTION ENCLOSURE - AT EACH LAVATORY
- K SOAP DISPENSER
- L TOILET PAPER DISPENSER
- M SURFACE MOUNTED PAPER TOWEL DISPENSER W/ TRASH RECEPTACLE
- N SEMI-RECESSED PAPER TOWEL DISPENSER W/ TRASH RECEPTACLE
- P WALL MOUNTED SIND, REFER TO A1.3 FOR MOUNTING HEIGHTS

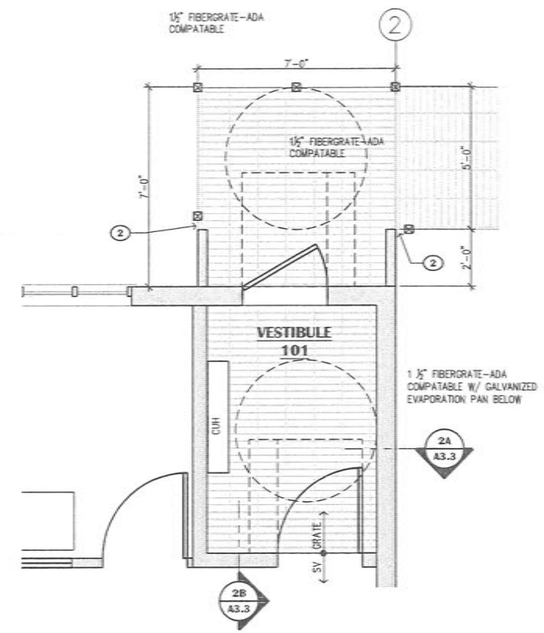

2 ENLARGED STAIR

SCALE: 3/8"=1'-0"

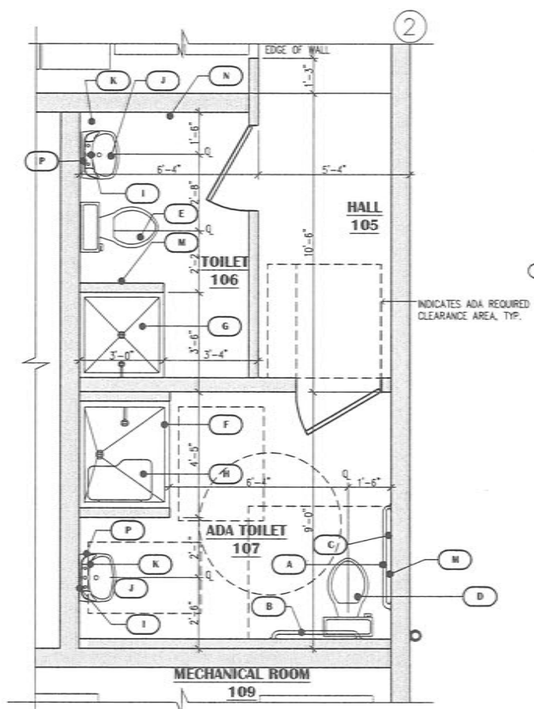

3 ENLARGED FLOOR PLAN

SCALE: 3/8"=1'-0"

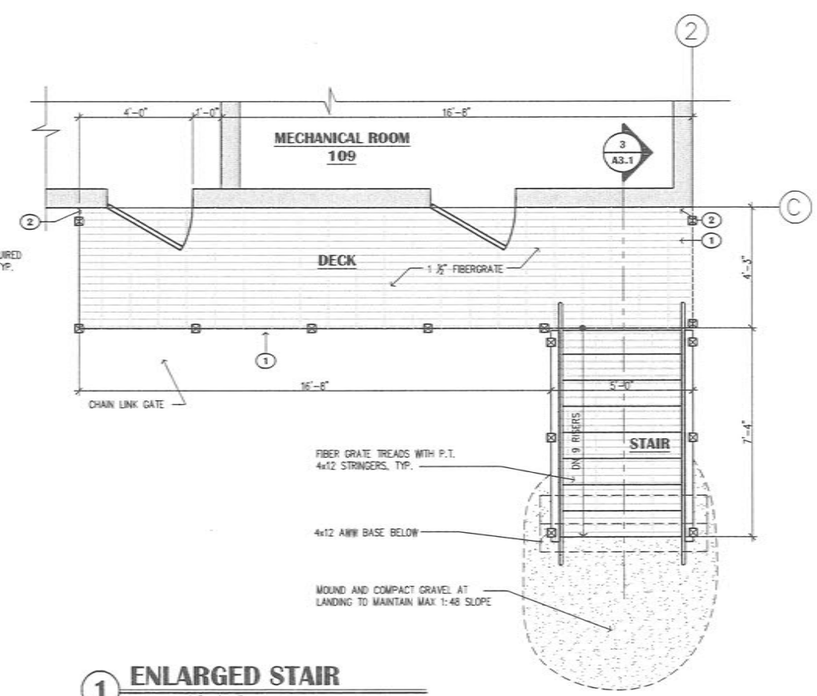

1 ENLARGED STAIR

SCALE: 3/8"=1'-0"

REVIEW DOCUMENTS

Envision ARCHITECTURE
1231 Gambell Ste. 400
Anchorage, Alaska 99501
907-349-1425

SCALE: AS SHOWN

BAR IS ONE INCH ON ORIGINAL DRAWING. IF NOT ONE INCH ON THIS SHEET, ADJUST SCALES ACCORDINGLY

CONSTRUCTION RECORD
FIELD BOOK
STAKING
FOREMAN
AS-BUILT
INSPECTOR

WASHETERIA AND WATER TANK
WASHETERIA
ENLARGED FLOOR PLANS
CHEFORNAK, ALASKA

CE2 ENGINEERS, INC.
PO BOX 223948 ANCHORAGE, AK 99523 PH: 907-349-1010 FAX: 907-349-1015

REVISION	BY	DATE

Project No.
Date MARCH 2014
Designed BT
Drawn CV
Approved BT

Sheet No. A1.2

SHEET ____ OF ____

G:\ACAD\CHEFORNAK\2013 Washeteria and Water Tank\From Others\NvisionArch\A1.2-enlrgd plans.dwg, 5/23/2014 11:08:45 AM, cmerz, \\CE2MAIN\LANIER MP 6001/LD360 PCL 6

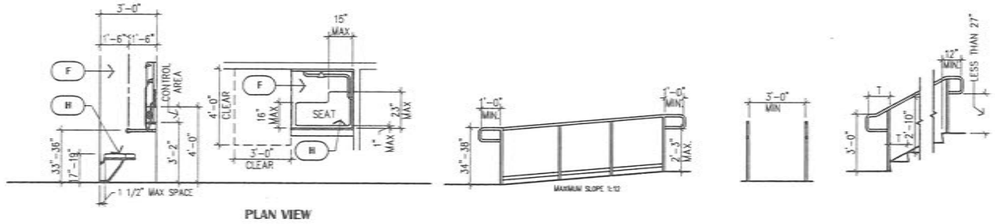

PLAN VIEW

ACCESSIBLE TRANSFER SHOWER

HANDRAIL EXTENSION

HANDRAIL CLEARANCE

STAIR EXTENSIONS

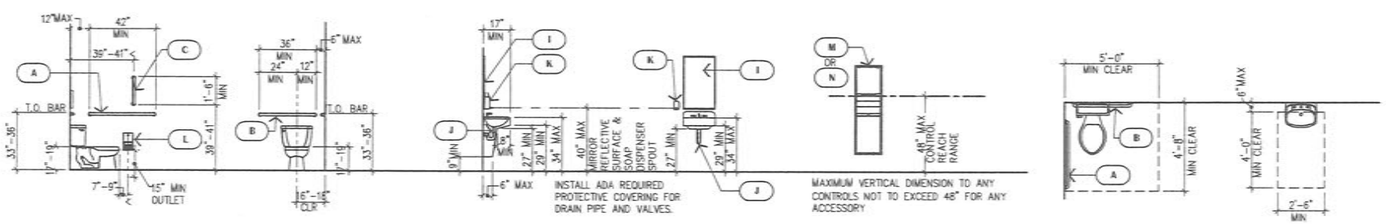

SIDE WALL

BACK WALL

SIDE/SECTION ELEVATION

FRONT ELEVATION

MISCELLANEOUS ACCESSORIES

LAVATORY, MIRROR, SOAP DISPENSER AND LAVATORY PROTECTION ENCLOSURE

TOILET PLAN VIEW

PLAN AT LAVS

3 TYPICAL ACCESSIBLE FIXTURE & ACCESSORY MOUNTING DIMENSIONS

SCALE: 1/4"=1'-0"

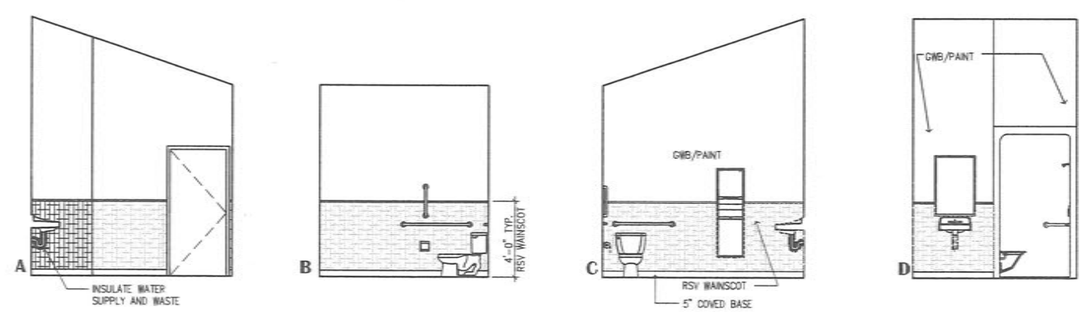

2 INTERIOR ELEVATIONS - ADA TOILET 107

REFER TO A1.2 FOR ACCESSORY SCHEDULE

SCALE: 1/4"=1'-0"

ROOF KEYED SHEET NOTES:

1. SNOW GUARDS

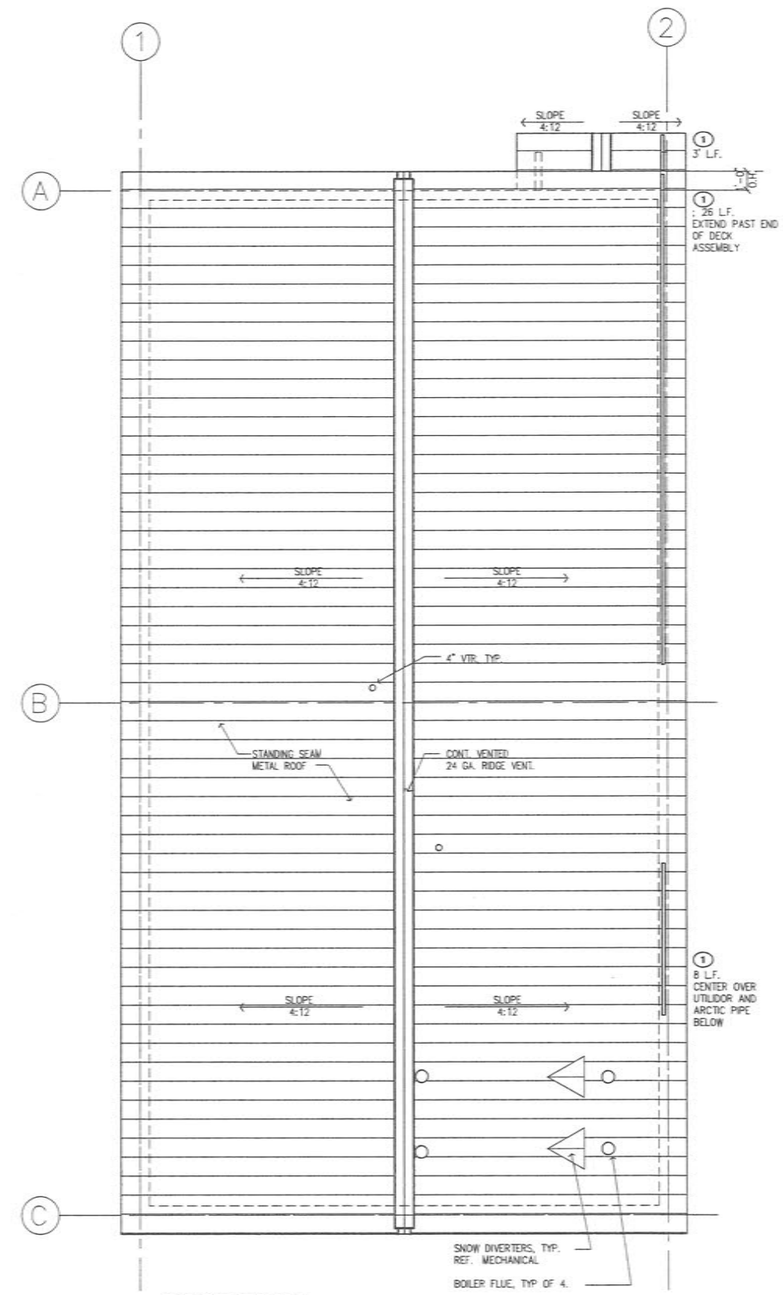

1 ROOF PLAN

SCALE: 1/4"=1'-0"

REVIEW DOCUMENTS

Invision ARCHITECTURE
1231 Gambell Ste. 400
Anchorage, Alaska 99501
907-349-1425

SCALE: AS SHOWN

BAR IS ONE INCH ON ORIGINAL DRAWING

IF NOT ONE INCH ON THIS SHEET, ADJUST SCALES ACCORDINGLY

CONSTRUCTION RECORD

FIELD BOOK

STAMING

FOREMAN

AS-BUILT

INSPECTOR

WASHETERIA AND WATER TANK

ROOF PLAN
INT. ELEVATIONS
TYP. MOUNTING HTS.

CHEFORNAK, ALASKA

CE2 ENGINEERS, INC.
PO BOX 220946 ANCHORAGE, AK 99522 PH: 907-349-1010 FAX: 907-349-1015

REVISION	BY	DATE

Project No.

Date MARCH 2014

Designed BT

Drawn CV

Approved BT

Sheet No. A1.3

SHEET ___ OF ___

G:\ACAD\CHEFORNAK\2013 Washeteria and Water Tank\From Others\InvisionArch\A1.3 roof-interior elev.dwg, 5/23/2014 11:08:20 AM, cmerz, \\CE2MAIN\LANIER MP 6001/LD360 PCL 6

GENERAL SHEET NOTES

1. REFER TO CIVIL DRAWINGS FOR ALL FINAL SITE ELEVATIONS.

MATERIAL LEGEND

1. STANDING SEAM METAL ROOF
2. METAL SIDING
3. SNOW CLEATS
4. CHAIN LINK SKIRT W/ TOP & BOTTOM RAIL
5. METAL FASCIA/SOFFIT
6. VINYL WINDOW – REF. SHEET A1.1
7. CONT. METAL RIDGE CAP
8. H.M. DOOR – REF. SHEET A1.1

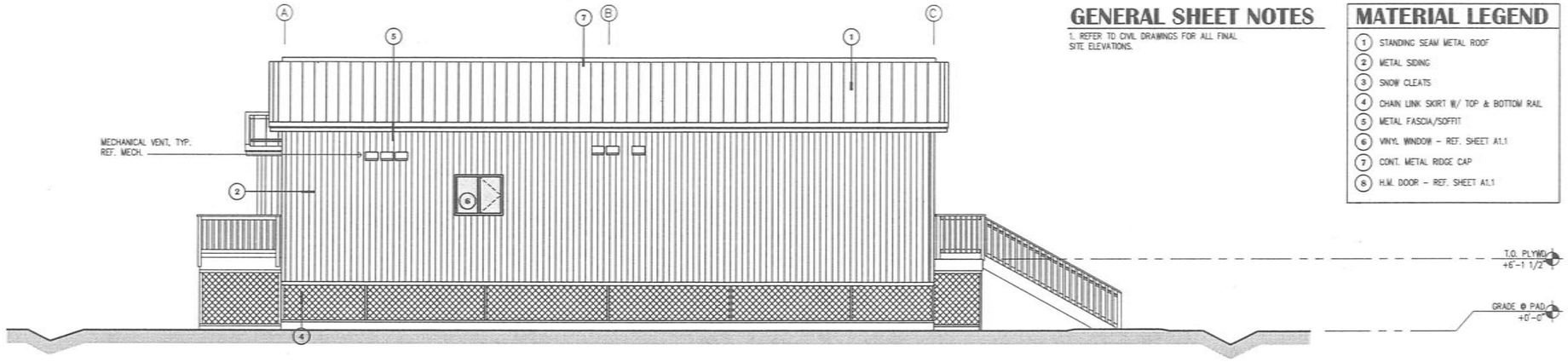

4 EXTERIOR ELEVATION
SCALE: 3/16"=1'-0"

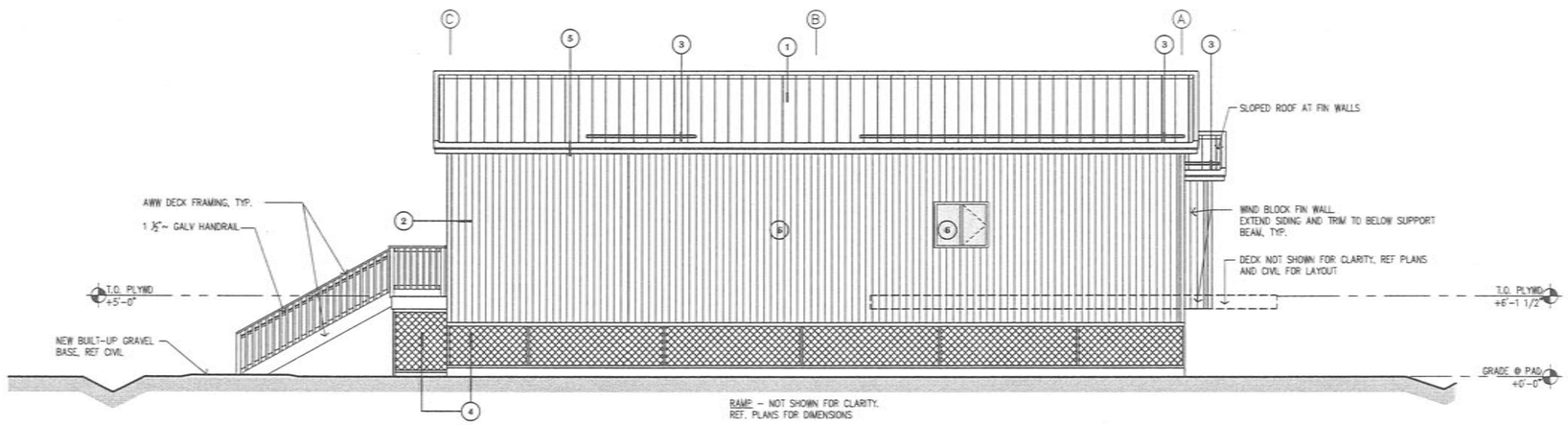

3 EXTERIOR ELEVATION
SCALE: 3/16"=1'-0"

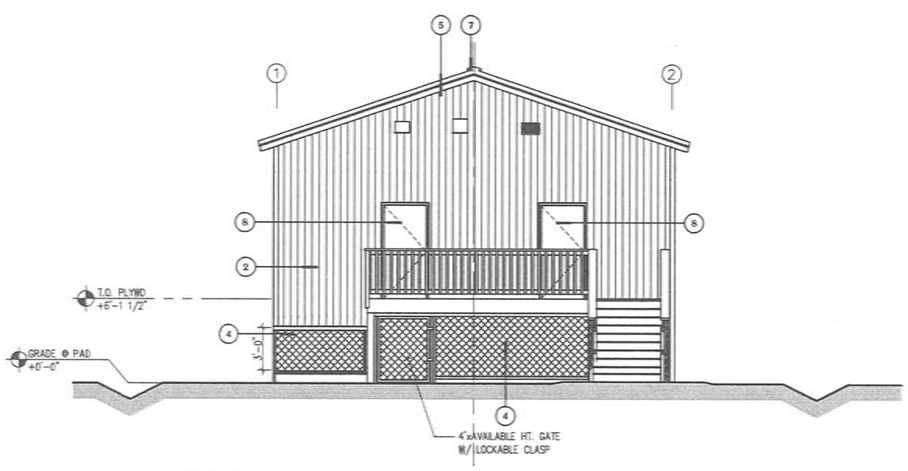

2 EXTERIOR ELEVATION
SCALE: 3/16"=1'-0"

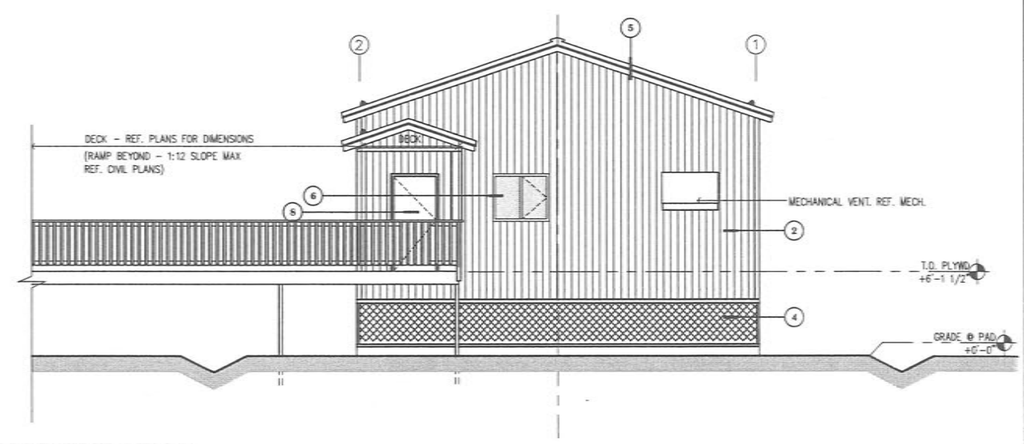

1 EXTERIOR ELEVATION
SCALE: 3/16"=1'-0"

REVIEW DOCUMENTS

Division ARCHITECTURE
1231 Gambell Ste. 400
Anchorage, Alaska 99501
907-349-1425

SCALE: AS SHOWN

BAR IS ONE INCH ON ORIGINAL DRAWING
0 1"
IF NOT ONE INCH ON THIS SHEET, ADJUST SCALES ACCORDINGLY

CONSTRUCTION RECORD
FIELD BOOK
STAKING
FOREMAN
AS-BUILT
INSPECTOR

WASHETERIA AND WATER TANK
WASHETERIA
EXTERIOR ELEVATIONS
CHEFORNAK, ALASKA

CE2 ENGINEERS, INC.
PO BOX 230948 ANCHORAGE, AK 99523 PH: 907-349-1010 FAX: 907-349-1015

REVISION	BY	DATE

Project No.
Date MARCH 2014
Designed BJ
Drawn CV
Approved BJ

Sheet No. A2.1
SHEET ____ OF ____

G:\ACAD\CHEFORNAK\2013 Washeteria and Water Tank\From Others\NvisionArch\A2.1-Ext Elevations.dwg, 5/23/2014 11:07:49 AM, cnerz, \\CE2NAIN\LANIER MP 6001/LD360 PCL 6

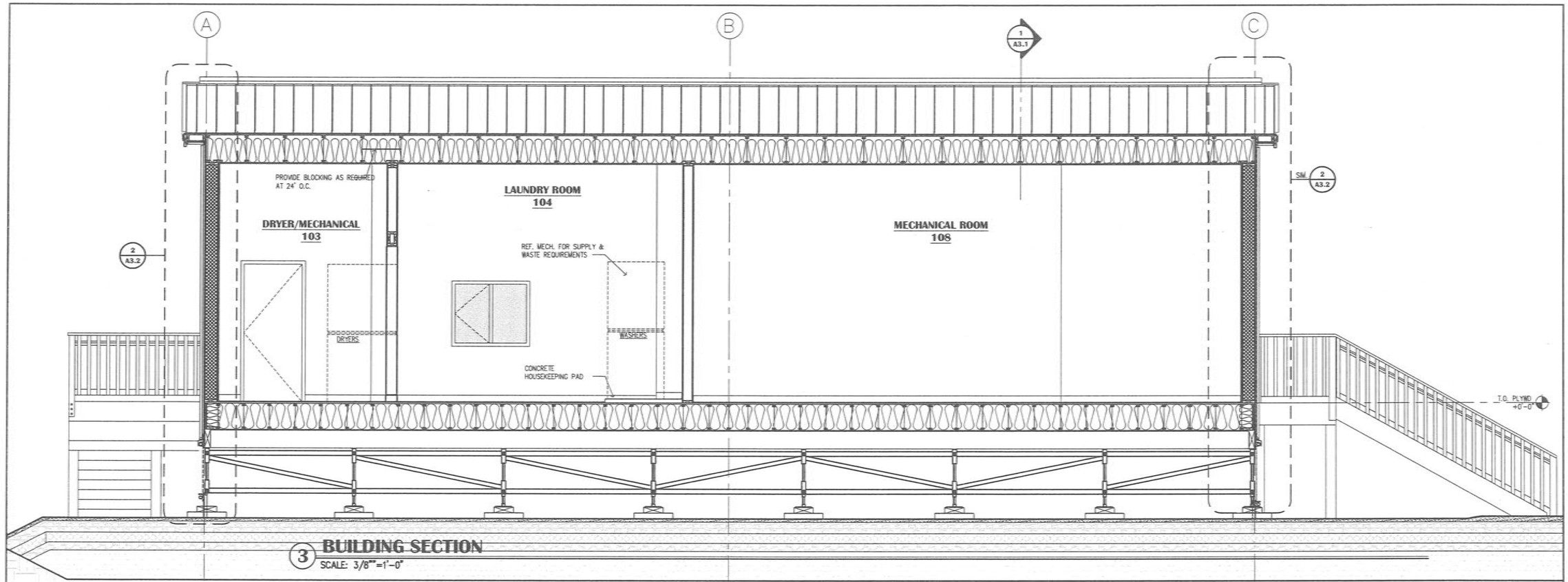

3 BUILDING SECTION
SCALE: 3/8"=1'-0"

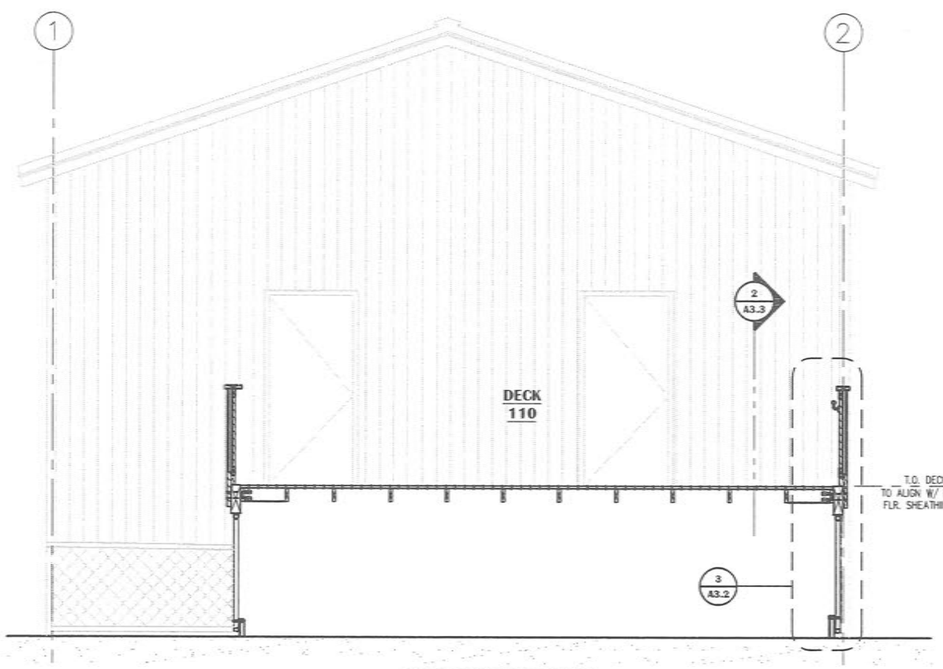

2 STAIR SECTION
SCALE: 3/8"=1'-0"

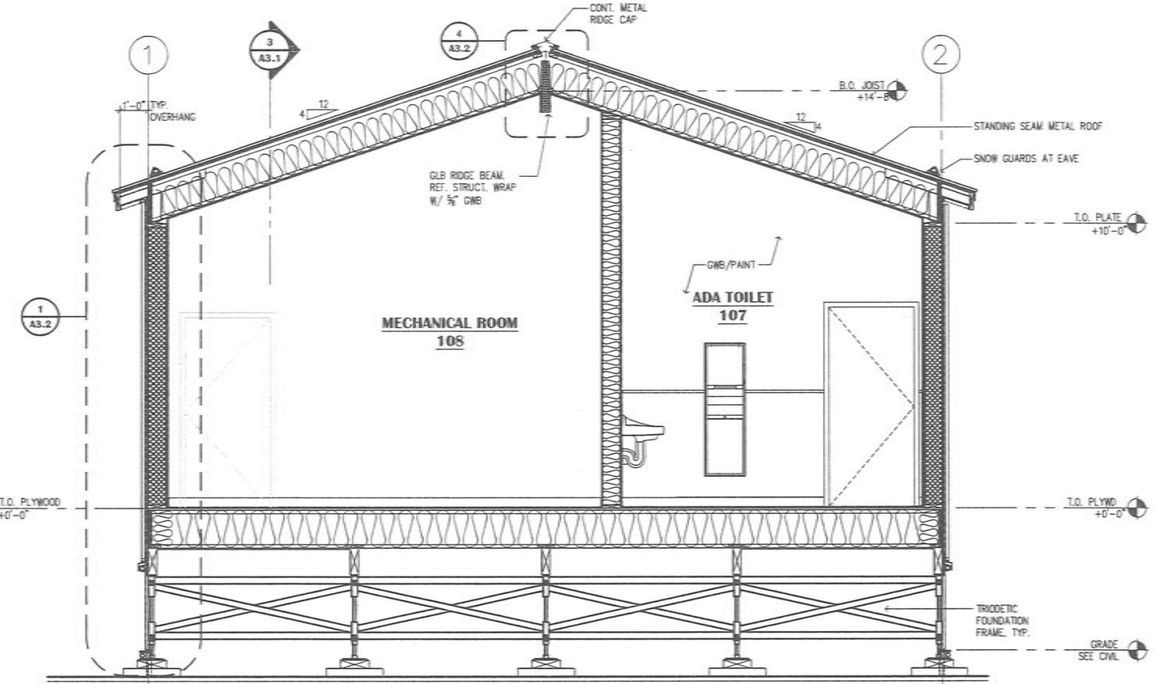

1 BUILDING SECTION
SCALE: 3/8"=1'-0"

REVIEW DOCUMENTS

Division ARCHITECTURE
1231 Gambell Ste. 400
Anchorage, Alaska 99501
907-349-1425

SCALE: AS SHOWN

BAR IS ONE INCH ON ORIGINAL DRAWING
0 1"
IF NOT ONE INCH ON THIS SHEET, ADJUST SCALES ACCORDINGLY

CONSTRUCTION RECORD
FIELD BOOK
STAKING
FOREMAN
AS-BUILT
INSPECTOR

WASHETERIA AND WATER TANK

WASHETERIA BUILDING SECTIONS

CHEFORNAK, ALASKA

CE2 ENGINEERS, INC.
PO BOX 230246 ANCHORAGE, AK 99523 PH: 907-349-1019 FAX: 907-349-1015

REVISION	BY	DATE

Project No.
Date MARCH 2014
Designed BT
Drawn CV
Approved BT

Sheet No. A3.1
SHEET ____ OF ____

G:\ACAD\CHEFORNAK\2013 Washeteria and Water Tank\From Others\NvisionArch\A3.1-BldgSections.dwg, 5/23/2014 11:07:20 AM, cmerz, \\CE2MAIN\LANIER MP 6001/LD360 PCL 6

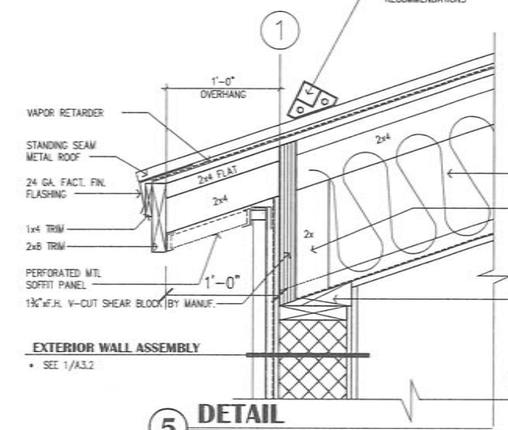

5 DETAIL
SCALE: 1 1/2"=1'-0"

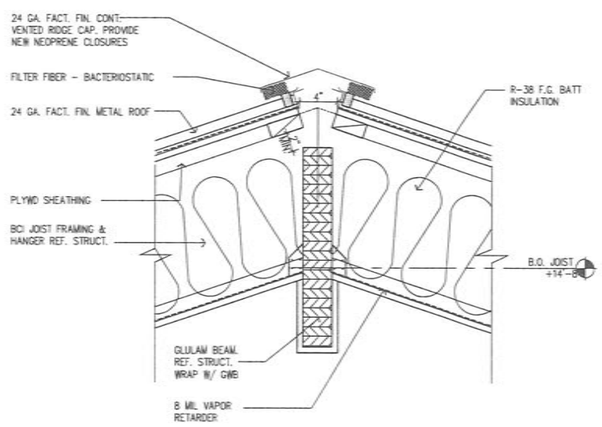

4 DETAIL
SCALE: 1 1/2"=1'-0"

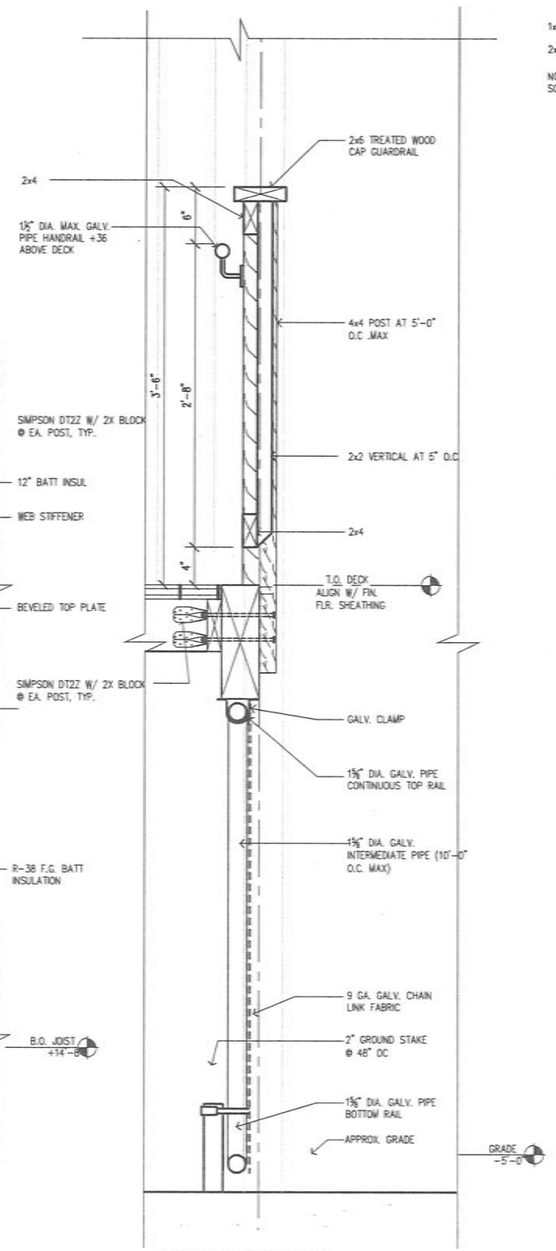

3 STAIR DETAIL
SCALE: 1 1/2"=1'-0"

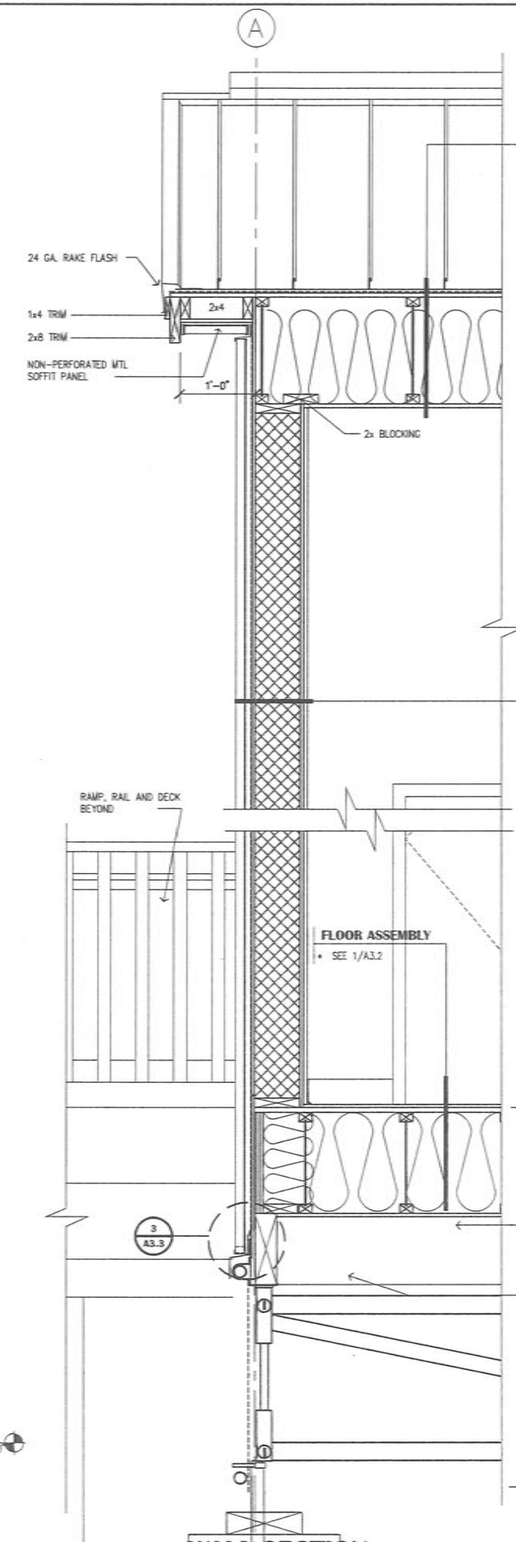

2 WALL SECTION
SCALE: 1"=1'-0"

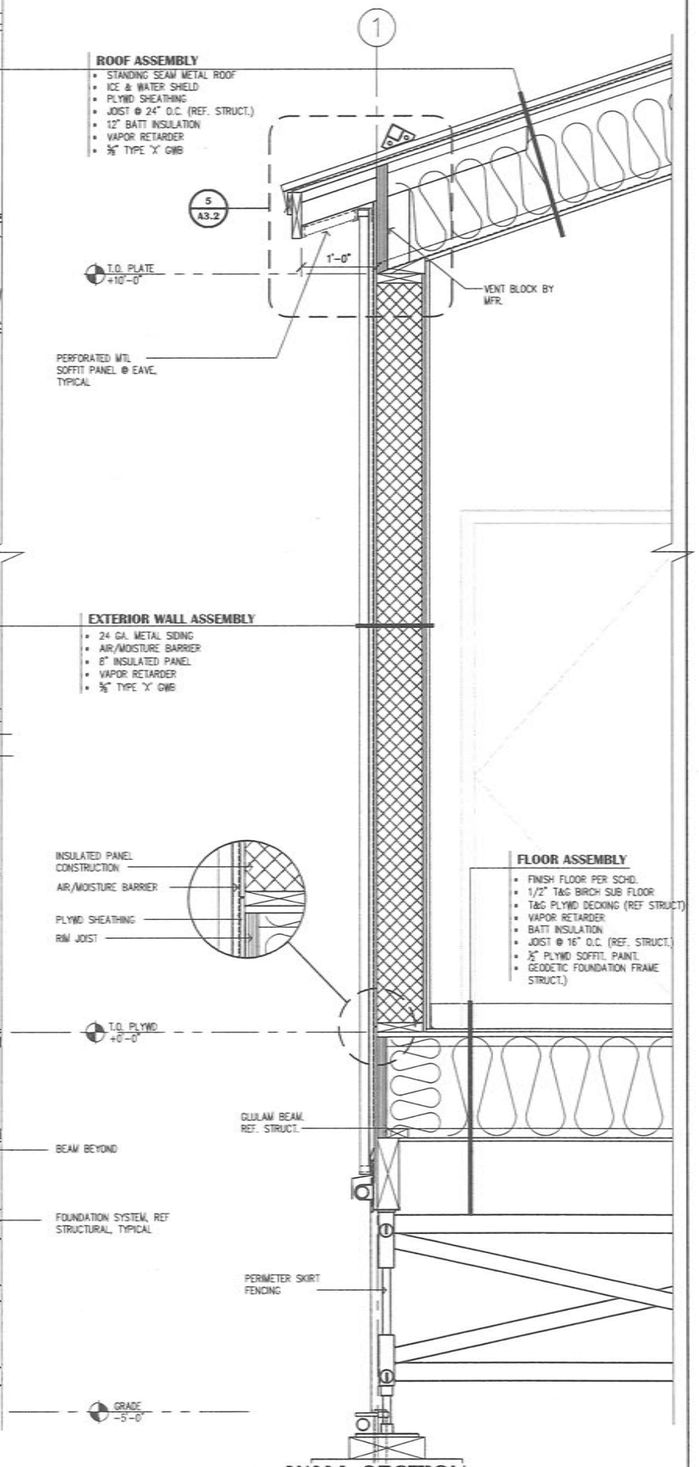

1 WALL SECTION
SCALE: 1"=1'-0"

REVIEW DOCUMENTS

Avision ARCHITECTURE
1231 Gambell Ste. 400
Anchorage, Alaska 99501
907-349-1425

SCALE: AS SHOWN

BAR IS ONE INCH ON ORIGINAL DRAWING 0 1"

IF NOT ONE INCH ON THIS SHEET, ADJUST SCALES ACCORDINGLY

CONSTRUCTION RECORD
FIELD BOOK
STAKING
FOREMAN
AS-BUILT
INSPECTOR

WASHETERIA AND WATER TANK

WASHETERIA WALL SECTIONS

CHEFORNAK, ALASKA

CE2 ENGINEERS, INC.
PO BOX 223948 ANCHORAGE, AK 99523 PH: 907-349-1010 FAX: 907-349-1015

REVISION	BY	DATE

Project No.
Date MARCH 2014
Designed BT
Drawn CV
Approved BT

Sheet No. A3.2

SHEET ____ OF ____

G:\ACAD\CHEFORNAK\2013 Washeteria and Water Tank\From Others\AvisionArch\A3.2-WallSections.dwg, 5/23/2014 11:06:43 AM, cmerz, \\CE2MAIN\LANIER MP 6001/LD360 PCL 6

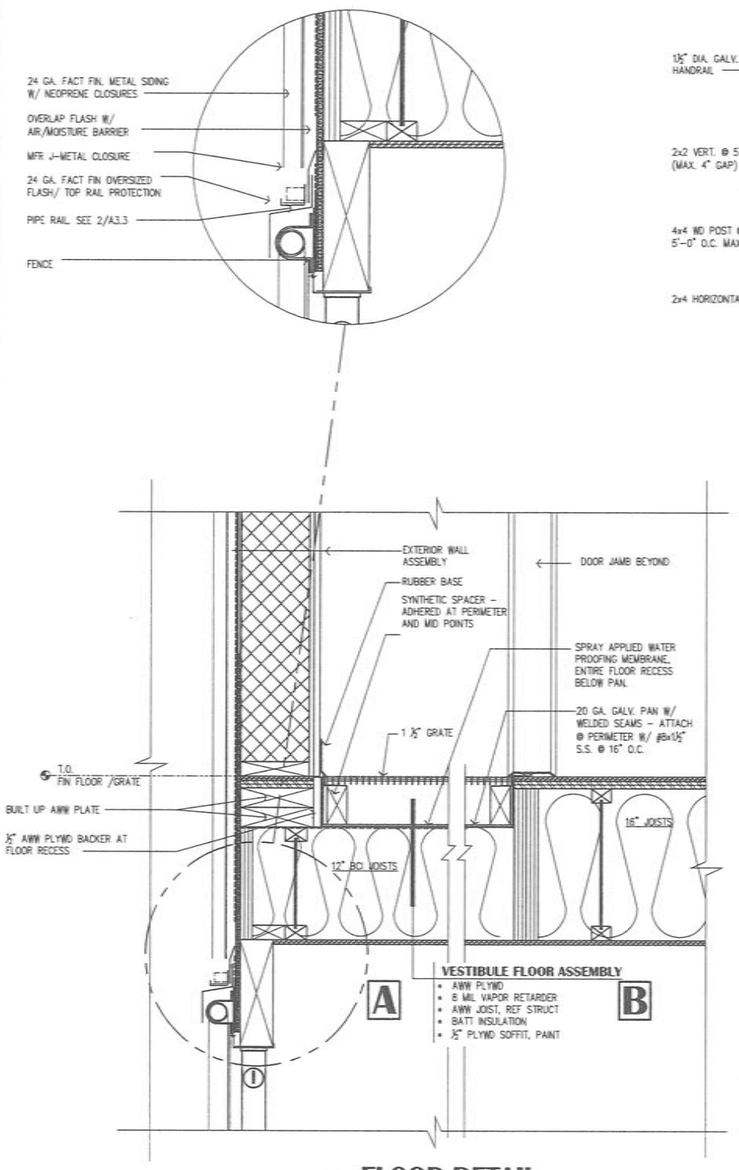

3 FLOOR DETAIL
SCALE: 1 1/2"=1'-0"

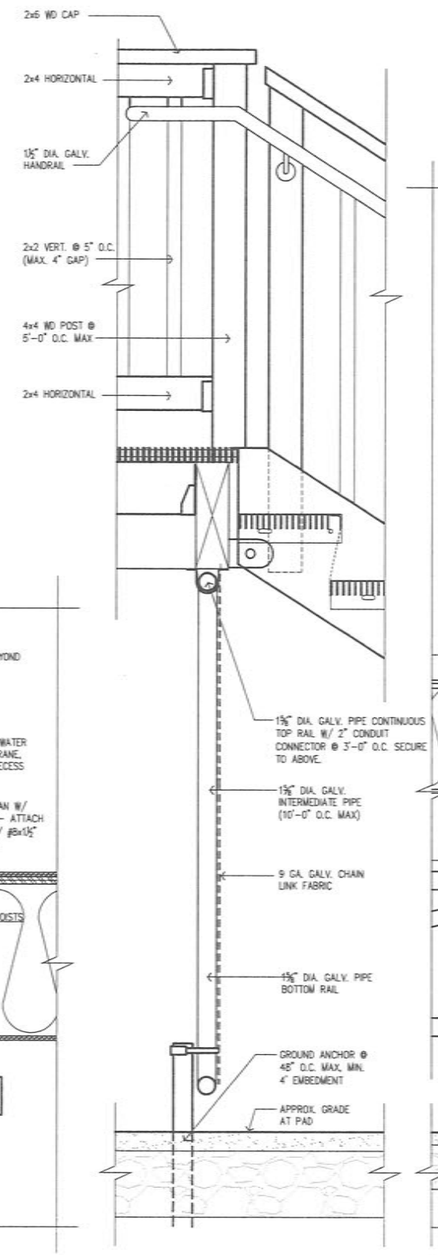

2 STAIR DETAIL
SCALE: 1 1/2"=1'-0"

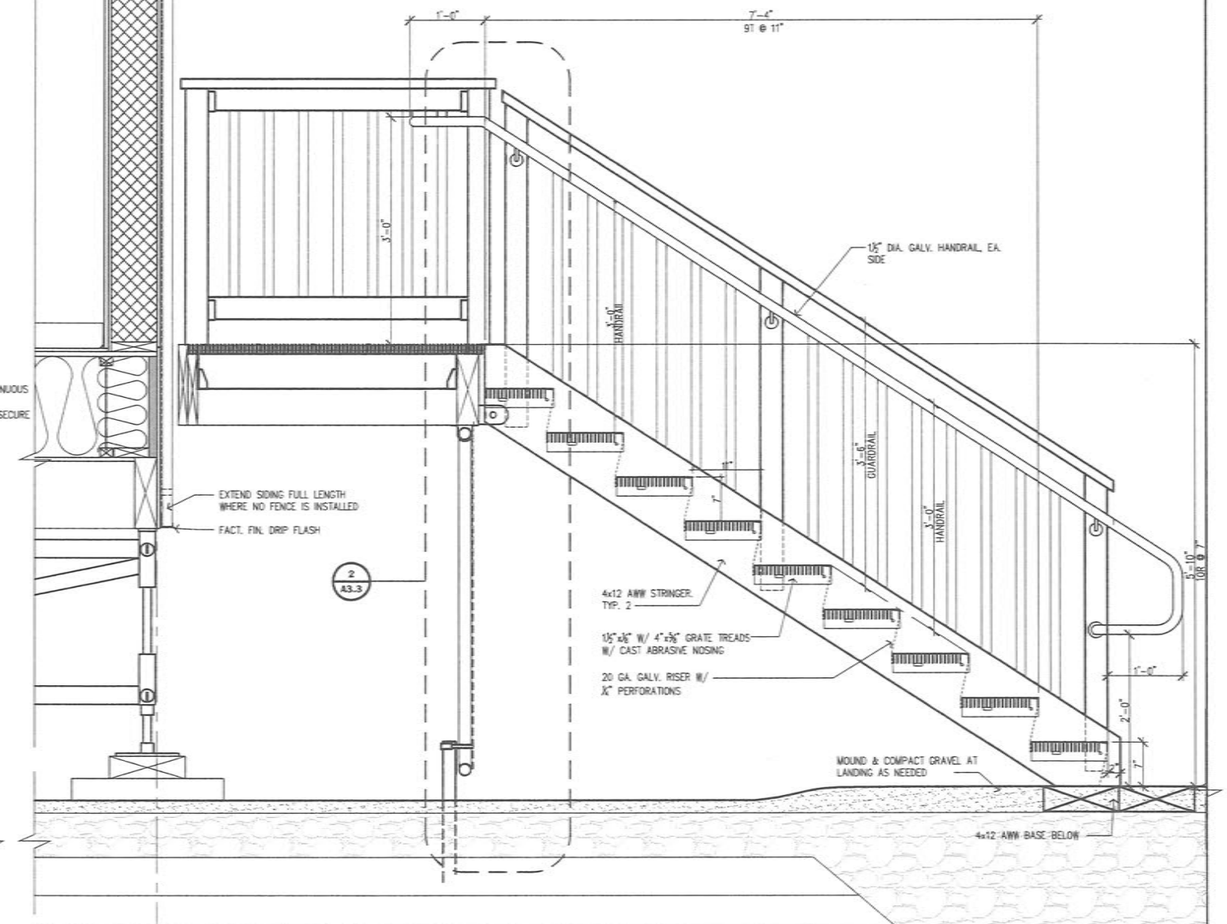

1 WALL SECTION
SCALE: 1"=1'-0"

REVIEW DOCUMENTS

G:\ACAD\CHEFORNAK\2013 Washeteria and Water Tank\From Others\NvisionArch\A3.3-WallSections.dwg, 5/23/2014 11:09:28 AM, cmerz, \\CE2MAIN\LANIER MP 6001/LD360 PCL 6

Nvision ARCHITECTURE
1231 Gambell Ste. 400
Anchorage, Alaska 99501
907-349-1425

SCALE: AS SHOWN

MAKE SURE THIS IS THE ORIGINAL DRAWING 0 1"
IF NOT ONE INCH ON THIS SHEET, ADJUST SCALE ACCORDINGLY

CONSTRUCTION RECORD
FIELD BOOK
STAMPING
FOREMAN
AS-BUILT
INSPECTOR

WASHETERIA AND WATER TANK
WASHETERIA WALL SECTIONS
CHEFORNAK, ALASKA

CE2 ENGINEERS, INC.
PO BOX 230946 ANCHORAGE, AK 99523 PH: 907-349-1010 FAX: 907-349-1015

REVISION	BY	DATE

Project No.
Date MARCH 2014
Designed BT
Drawn CV
Approved BT

Sheet No.
A3.3
SHEET ____ OF ____

STRUCTURAL NOTES

THE CONTRACTOR SHALL VERIFY AND COORDINATE ALL DIMENSIONS AMONG THE DRAWINGS BEFORE STARTING ANY WORK OR FABRICATION. ANY DISCREPANCIES FOUND AMONG THE DRAWINGS, SITE CONDITIONS, SPECIFICATIONS AND THESE NOTES SHALL BE REPORTED TO THE ARCHITECT/ ENGINEER AT ONCE.

ALL CONSTRUCTION SHALL COMPLY WITH THE 2006 INTERNATIONAL BUILDING CODE (IBC) AS AMENDED BY THE LOCAL BUILDING OFFICIAL.

SAFETY - THE CONTRACTOR IS RESPONSIBLE FOR MEETING ALL OSHA AND DOSH SAFETY STANDARDS. THE CONTRACTOR IS IN CHARGE OF ALL SAFETY MATTERS ON AND AROUND THE JOB SITE. PROVIDE TEMPORARY ERECTION BRACING AND SHORING AS REQUIRED FOR STABILITY OF THE STRUCTURE DURING ALL PHASES OF CONSTRUCTION.

CODE
2006 INTERNATIONAL BUILDING CODE (IBC)

DESIGN LIVE LOADS

FLOOR LOADS - SEE DESIGN LOAD SCHEDULE SHEET S-1.1
MINIMUM ROOF LIVE LOAD = 20 PSF

SNOW

GROUND SNOW LOAD = 50 PSF
ROOF SNOW LOAD = 40 PSF
SNOW EXPOSURE FACTOR, C_e = 0.90
SNOW LOAD IMPORTANCE FACTOR = 1.0
THERMAL FACTOR, C_t = 1.0

WIND DESIGN DATA

VELOCITY = 130 MPH HOUR 3 SECOND GUST
IMPORTANCE FACTOR, I_w = 1.0
EXPOSURE C
INTERNAL PRESSURE COEFFICIENT, GCpi = ± 0.18
COMPONENTS AND CLADDING PRESSURES,
ROOF
ZONE 3 - WITHIN 8' OF CORNERS = 92.3 PSF
ZONE 2 - WITHIN 8' OF EAVE AND PEAK = 62.4 PSF
ZONE 1 - EVERYWHERE ELSE = 36.0 PSF
WALLS
ZONE 5 - WITHIN 8' OF VERTICAL CORNERS = 52.5 PSF
ZONE 4 - EVERYWHERE ELSE = 42.6 PSF

SEISMIC DESIGN DATA

I_e = 1.0
S_s = 1.08g, S_1 = 0.06g, S_{DS} = .16, S_{D1} = 0.09
SITE CLASS D
SEISMIC DESIGN CATEGORY D
SEISMIC RESISTING SYSTEM = BEARING WALL, PLYWOOD SHEARWALLS, R = 6.5
SEISMIC BASE SHEAR = V_s= 34.3 KIPS C_s = 0.11
EQUIVALENT LATERAL FORCE PROCEDURE

OCCUPANCY CATEGORY II

FOUNDATION DESIGN

FOUNDATION DESIGN IS BASED ON AN ASSUMED 1500 PSF SOIL BEARING PRESSURE ON A PREPARED PAD LEVEL AND STABLE FROM ANY SEASONAL FROST ACTION. TRIODETIC DESIGN BY OTHERS.

WOOD PRODUCTS

ALL LUMBER SHALL BE A MINIMUM OF HF#2 FOR ALL BRIDGING, BLOCKING AND FRAMING REQUIRED. MINIMUM FASTENING TO BE PER IBC TABLE 2304.9.1 UNLESS SPECIFICALLY NOTED IN THESE DRAWINGS. PROVIDE POSITIVE CONNECTION UTILIZING SIMPSON HANGERS OR FRAMED BEAM POCKETS TO RESIST VERTICAL AND LATERAL LOADING AT ALL POST CAPS AND BASES, BEARING WALLS.

PLATE CONNECTED TRUSSES - PROVIDE ENGINEERED SHOP DRAWINGS AND CALCULATIONS STAMPED BY AN ALASKAN LICENSED PROFESSIONAL ENGINEER, REVIEWED FOR CONFORMANCE BY THE CONTRACTOR, TO THE OWNER FOR APPROVAL PRIOR TO FABRICATION AND INSTALLATION. PROVIDE FULL DEPTH PROPERLY VENTED BLOCKING AT ALL SUPPORTS. NAIL ROOF SHEATHING TO BLOCKS WITH 10d'S @ 3" O.C., FASTEN BLOCKS TO PLATE WITH 16d TOE NAILS @ 6" O.C. PLUS A SIMPSON A35. PROVIDE TRUSS WEB BRIDGING WHERE INDICATED ON THE SHOP DRAWINGS, AND TIE THIS BRIDGING WITH DIAGONAL X-BRACING. BRACE GABLE END TRUSSES PER THE TRUSS PLATE INSTITUTE TPI/HIB AND DETAILS ON THE PLANS. DESIGN PER ROOF DESIGN LOADS ON S-1.1, PROVIDE BOTTOM CHORD DEAD LOAD OF 10 PSF, TOP CHORD DEAD LOAD OF 15 PSF. MAXIMUM DEFLECTION OF L/360 OR 1", WHICHEVER IS LESS. CONTRACTOR TO PROVIDE FOR ANTICIPATED TRUSS UPLIFT @ INTERIOR WALLS DUE TO TRUSS SHRINKAGE IN COLD WEATHER W/ STC CLIPS AND SHEETROCK FASTENING.

WOOD I- JOISTS - PROVIDE WOOD I JOISTS AS MANUFACTURED BY BOISE CASCADE, TRUSS JOIST, ROSEBURG OR EQUAL. PROVIDE FULL DEPTH SOLID BLOCKING AT ALL SUPPORTS. COORDINATE ALL HANGERS WITH ACTUAL JOIST SIZE. SUBMIT CONTRACTOR CHECKED ENGINEER SHOP DRAWINGS STAMPED BY AN ALASKAN LICENSED PROFESSIONAL ENGINEER PRIOR TO FABRICATION AND INSTALLATION.

FLOOR SHEATHING - USE APA RATED SHEATHING, TONGUE AND GROOVE, USE 48 SPAN RATING.

GLU LAM BEAMS SHALL BE 24F DF/HF WITH Fb=2,400 psi. USE V4 FOR SIMPLE SPANS AND V8 FOR CANTILEVERS OR BEAMS CONTINUOUS OVER SUPPORTS.

ROOF SHEATHING: USE APA RATED SHEATHING. UPPER ROOF SHEATHING WITH SUPPORTS @ 24" O.C. USE MINIMUM 3/4" SHEATHING WITH A 24/16 SPAN RATING.

WALL SHEATHING: USE APA RATED SHEATHING. PROTECT SHEATHING FROM THE WEATHER UNLESS IT IS RATED FOR EXTERIOR EXPOSURE. PROVIDE FRAMING OR BLOCKING BEHIND ALL PANEL EDGES. PROVIDE MINIMUM ⅜" FROM EDGE TO CENTER OF NAIL. DRIVE NAILS FLUSH, DO NOT OVERDRIVE FASTENERS. PROVIDE FASTENERS PER SHEARWALL SCHEDULE.

ALL WOOD IN CONTACT WITH CONCRETE OR EXPOSED TO THE WEATHER SHALL BE PRESERVATIVE TREATED IN ACCORDANCE WITH AMERICAN WOOD PRESERVATIVE ASSOCIATION. PROVIDE PRESSURE TREATED FOUNDATION SILL PLATES, PROVIDE 3X3X229" MIN. PLATE WASHERS FOR FOUNDATION ANCHOR BOLTS.

DESIGN LOAD SCHEDULE

	DESCRIPTION	SUPERIMPOSED DEAD LOAD (PSF)	LIVE LOAD (PSF)
1	ROOF BALANCED SNOW LOAD	15	40
2	FLOOR LOAD OFFICE	10	50
3	FLOOR LOAD ASSEMBLY AREA, CORRIDORS AND EXITS	10	100

ABBREVIATIONS

E.W. - EACH WAY
IBC - INTERNATIONAL BUILDING CODE
I.S. - INSIDE
O.S. - OUTSIDE
F.O.S. - FACE OF STUD
HDG - HOT DIP GALVANIZED
MFG - MANUFACTURER
PFA - POST FROM ABOVE
SIM. - SIMILAIR TO
SIP - STRUCTURAL INSULATED PANELS
TYP. - TYPICAL
UNO - UNLESS NOTED OTHERWISE
W.T.E. - WITH THE EXCEPTION
W.W.M. - WELDED WIRE MESH

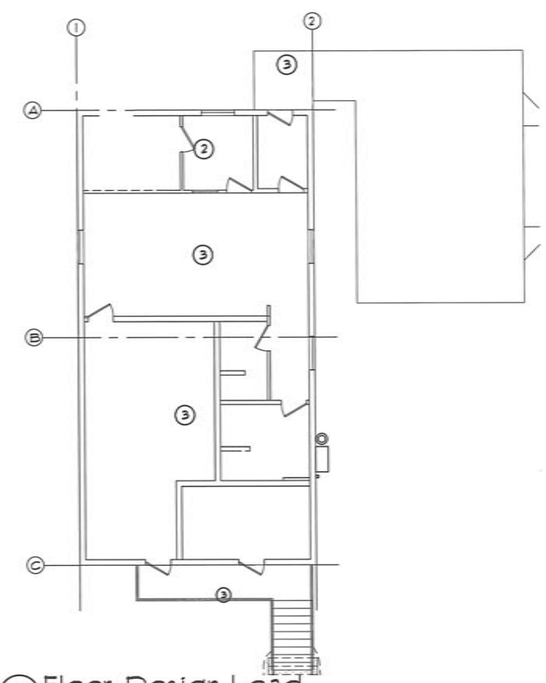

1 S0.1 Floor Design Load
Scale: 1/8" = 1'-0"

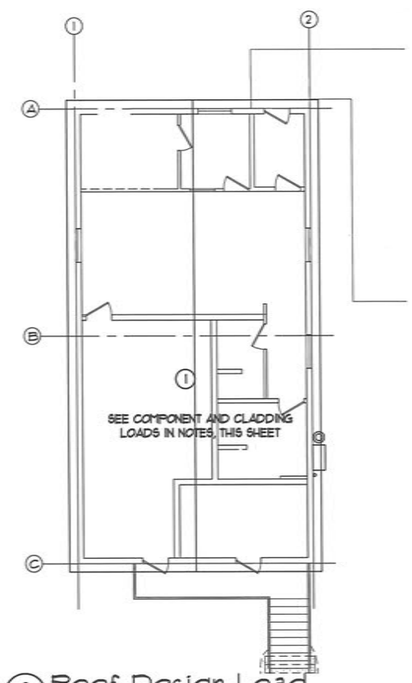

2 S0.1 Roof Design Load
Scale: 1/8" = 1'-0"

65% DOCUMENTS

Olen Associates, Inc.
Construction Management Engineering Inspections
Phone: (907) 454-6901
Fax: (907) 454-6905
email: bolen@gci.net
14402 Hilltop Drive
Eagle River, AK 99577

SCALE: AS SHOWN

BAR IS ONE INCH ON ORIGINAL DRAWING
0 1"
IF NOT ONE INCH ON THIS SHEET ADJUST SCALE ACCORDINGLY

CONSTRUCTION RECORD
FIELD BOOK
STAKING
FOREMAN
AS-BUILT
INSPECTOR

STATE OF ALASKA 49th BENJAMIN C. GIBB CE-5141 5/21/14 REGISTERED PROFESSIONAL ENGINEER

WASHETERIA AND WATER TANK
STRUCTURAL NOTES
CHEFORNAK, ALASKA

CE2 ENGINEERS, INC.
PO BOX 220246 ANCHORAGE, AK 99522 PH: 907-349-3310 FAX: 907-349-3315

REVISION	BY	DATE

Project No. 32488
Date 5/21/14
Designed BGG
Drawn BRL
Approved OAI

Sheet No. S0.1
SHEET ___ OF ___

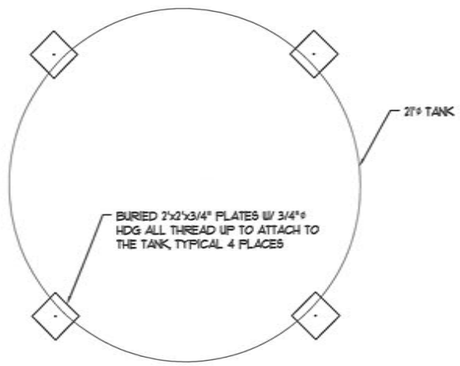

3 S1.1 Tank Hold Downs
Scale: 1/4" = 1'-0"

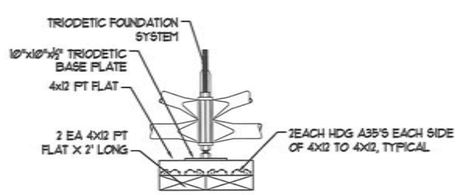

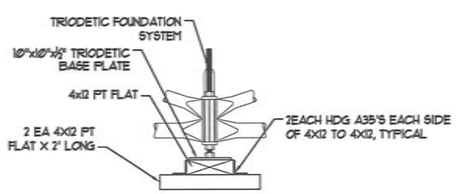

2 S1.1 Triodetic Pad Detail
Scale: 3/4" = 1'-0"

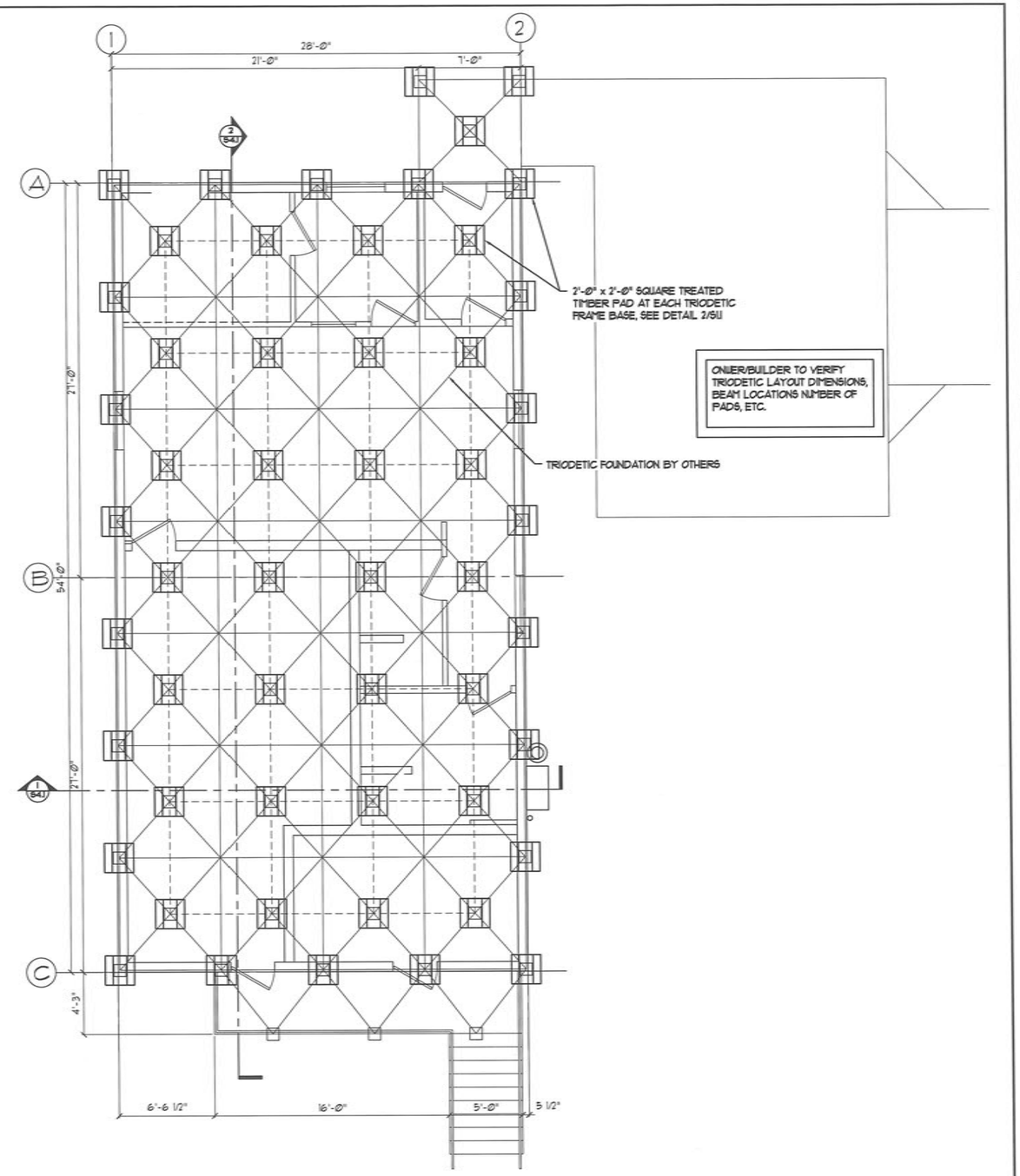

1 S1.1 Foundation Plan
Scale: 1/4" = 1'-0"

65% DOCUMENTS

Olen Associates, Inc.
Construction Management Engineering Inspections
Phone: (907) 694-6601
Fax: (907) 694-6606
email: bolen@gci.net
14822 Hilman Drive
Eagle River, AK 99577

SCALE: AS SHOWN

BAR IS ONE INCH ON ORIGINAL DRAWING
0 1"
IF NOT ONE INCH ON THIS SHEET, ADJUST SCALES ACCORDINGLY

CONSTRUCTION RECORD
FIELD BOOK
STAKING
FOREMAN
AS-BUILT
INSPECTOR

STATE OF ALASKA 49th BOLEN D. GEO 6-541 9/2/14 REGISTERED PROFESSIONAL ENGINEER

WASHETERIA AND WATER TANK

WASHETERIA FOUNDATION PLAN

CHEFORNAK, ALASKA

CE2 ENGINEERS, INC.
PO BOX 32246 ANCHORAGE, AK 99503 PH: 907-349-1019 FAX: 907-349-1015

REVISION	BY	DATE

Project No. 32408
Date 5/21/14
Designed BCO
Drawn RBJ
Approved OAL

Sheet No. S1.1
SHEET ___ OF ___

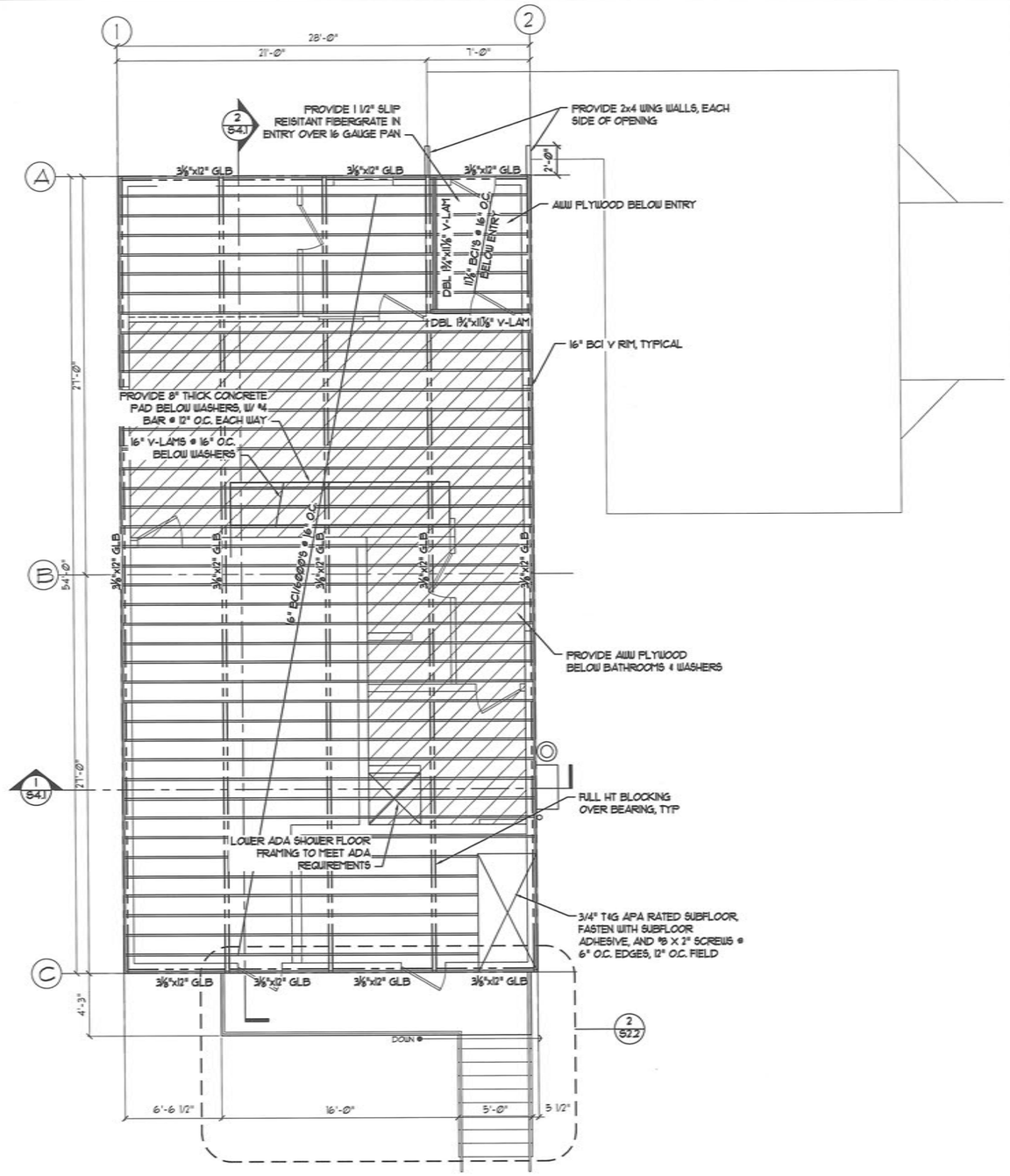

1 S2.1 Floor Framing Plan
Scale: 1/4" = 1'-0"

65% DOCUMENTS

Olen Associates, Inc.
Construction Management Engineering Inspections
Phone: (907) 694-6901
Fax: (907) 694-6906
email: bcoinc@gci.net
14402 Hanson Drive
Eagle River, AK 99577

SCALE: AS SHOWN

BAR IS ONE INCH ON ORIGINAL DRAWING
0 1"
IF NOT ONE INCH ON THIS SHEET, ADJUST SCALES ACCORDINGLY

CONSTRUCTION RECORD
FIELD BOOK
STAKING
FOREMAN
AS-BUILT
INSPECTOR

STATE OF ALASKA 49th BRIAN C. OLEN CE-9141 9/21/14 REGISTERED PROFESSIONAL ENGINEER

WASHETERIA AND WATER TANK

WASHETERIA
FLOOR FRAMING PLAN

CHEFORNAK, ALASKA

CE2 ENGINEERS, INC.
PO BOX 232049 ANCHORAGE, AK 99523 PH: 907-349-1015 FAX: 907-349-1015

REVISION	BY	DATE

Project No. 32488
Date 5/21/14
Designed BCO
Drawn RRJ
Approved DAL

Sheet No.
S2.1
SHEET ___ OF ___

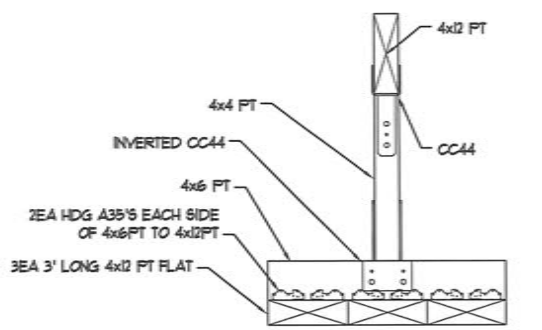

4/S1.1 Pad Detail - Parking Deck
Scale: 1½" = 1'-0"

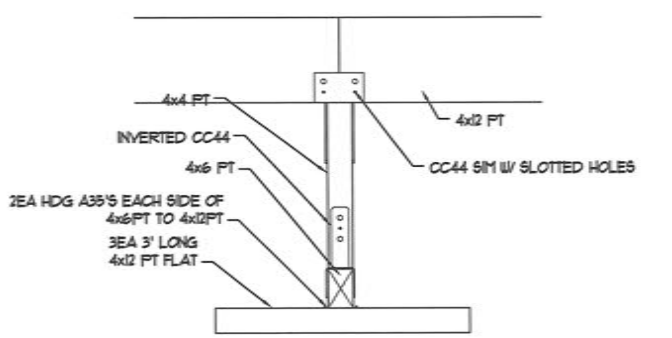

3/S1.1 Pad Detail - Parking Deck
Scale: 1½" = 1'-0"

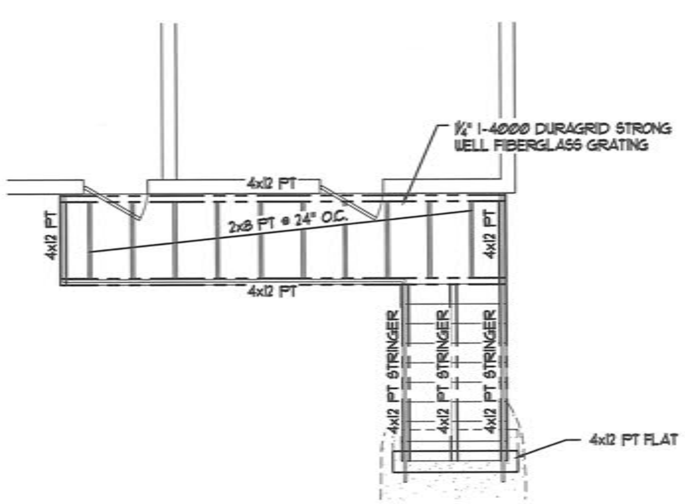

2/S2.2 Exterior Stair Framing Plan
Scale: ⅜" = 1'-0"

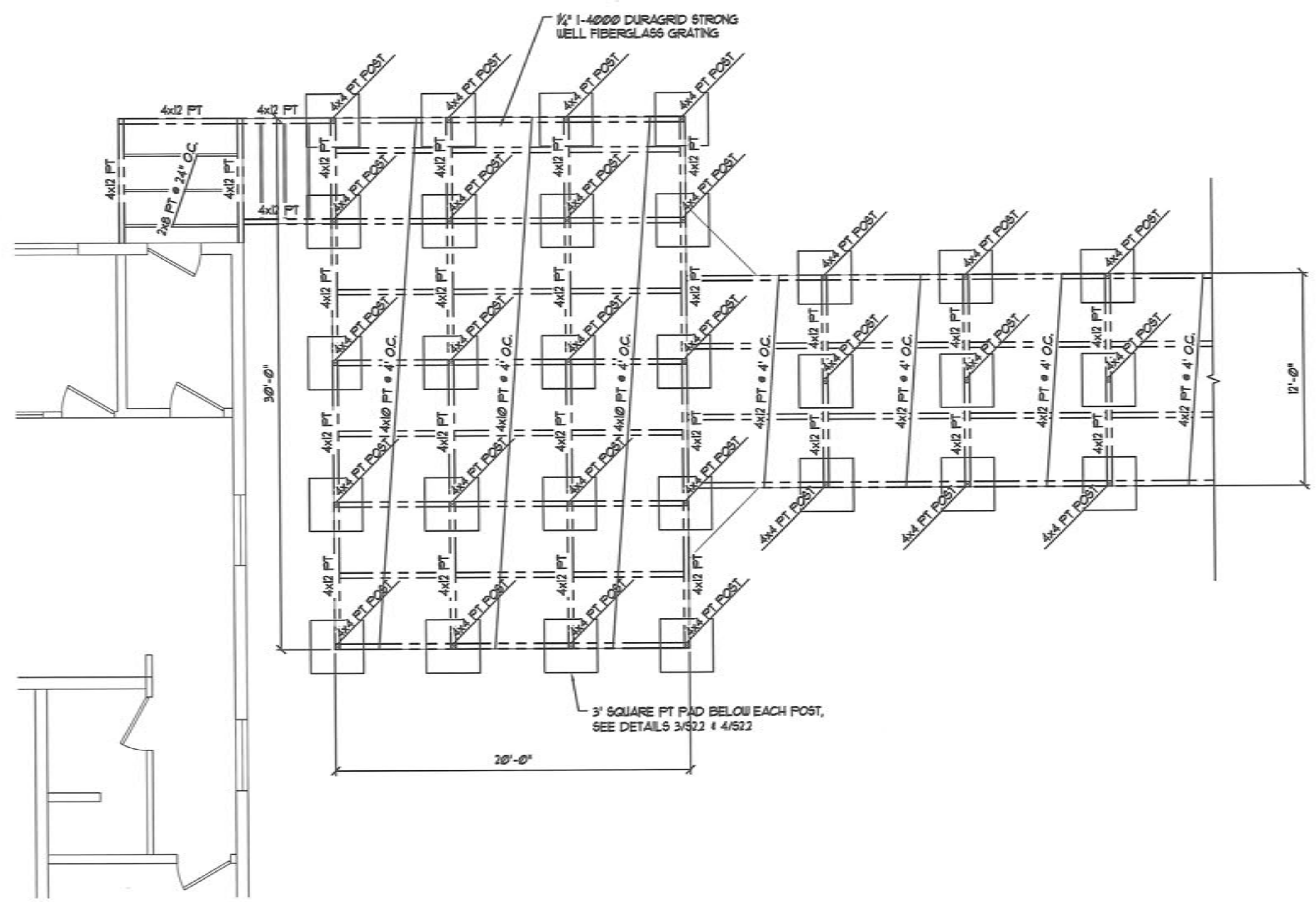

1/S2.2 Parking Deck Framing Plan
Scale: ¼" = 1'-0"

65% DOCUMENTS

Oien Associates, Inc.
Construction Management Engineering Inspections
16022 Hanson Drive
Eagle River, AK 99577
Phone (907) 694-6567
Fax (907) 694-6566
email: boien@gci.net

SCALE:
AS SHOWN
BAR IS ONE INCH ON ORIGINAL DRAWING
0 1"
IF NOT ONE INCH ON THIS SHEET, ADJUST SCALES ACCORDINGLY

CONSTRUCTION RECORD
FIELD BOOK
STAKING
FOREMAN
AS-BUILT
INSPECTOR

STATE OF ALASKA 49th BENJAMIN C. OIEN CE-9141 5/21/14 REGISTERED PROFESSIONAL ENGINEER

WASHETERIA AND WATER TANK
WASHETERIA
RAMP FRAMING PLAN
EXT. STAIR FRAMING PLAN
CHEFORNAK, ALASKA

CE2 ENGINEERS, INC.
PO BOX 232946 ANCHORAGE, AK 99523 PH: 907-349-1010 FAX: 907-349-1015

REVISION	BY	DATE

Project No. 32488
Date 5/21/14
Designed BCO
Drawn RBJ
Approved OAL

Sheet No. S2.2
SHEET ____ OF ____

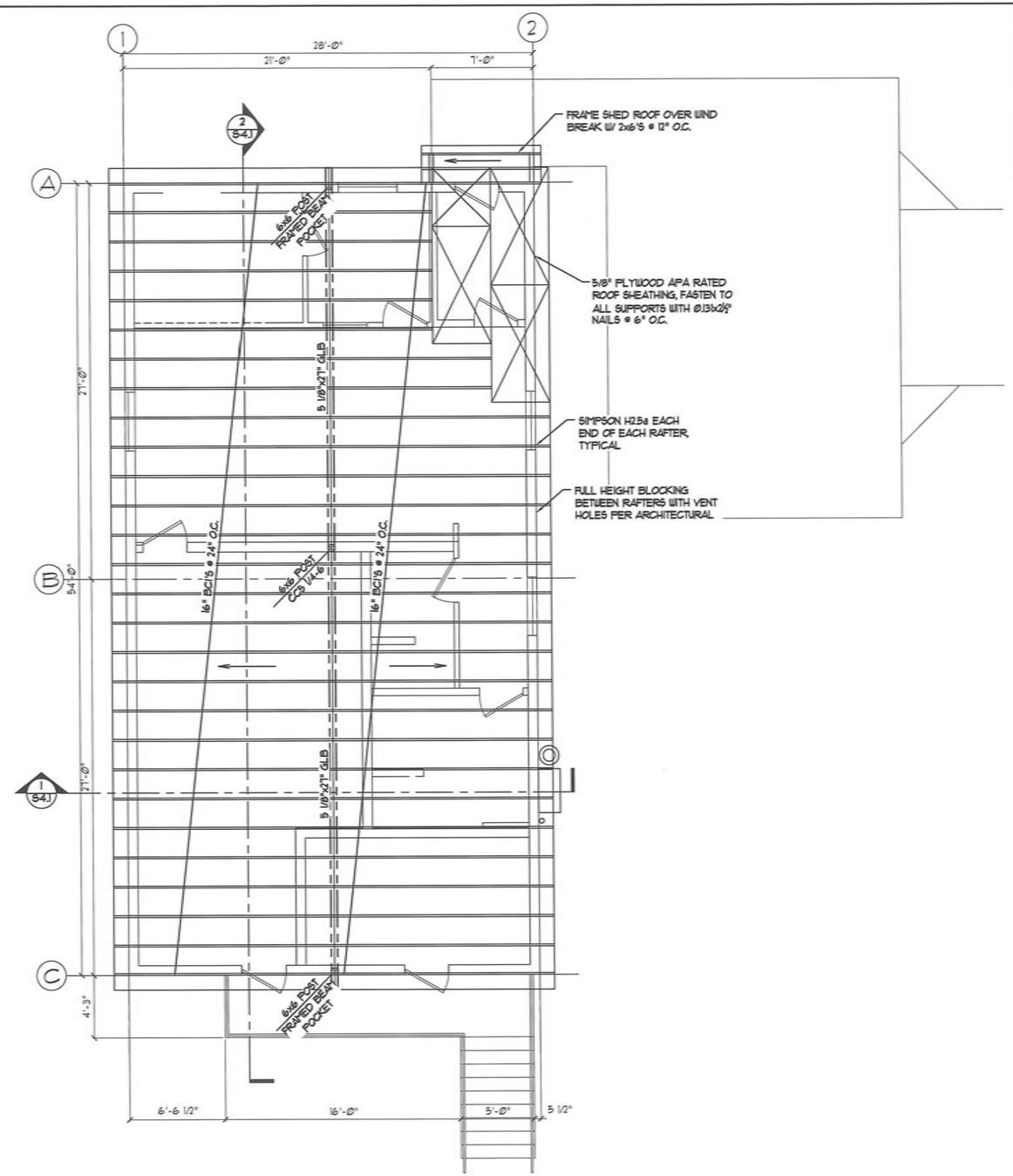

1 S3.1 Roof Framing Plan
Scale: ¼" = 1'-0"

65% DOCUMENTS

Olen Associates, Inc.
Construction Management Engineering Inspections
Phone: (907) 493-5671
Fax: (907) 493-5676
email: bolen@gci.net
14000 Hansen Drive
Eagle River, AK 99577

SCALE: AS SHOWN

BAR IS ONE INCH ON ORIGINAL DRAWING
0 1"
IF NOT ONE INCH ON THIS SHEET, ADJUST SCALES ACCORDINGLY

CONSTRUCTION RECORD
FIELD BOOK
STAMPING
FOREMAN
AS-BUILT
INSPECTOR

STATE OF ALASKA 49th BENJAMIN C. OBER 6-24-14 REGISTERED PROFESSIONAL ENGINEER

WASHETERIA AND WATER TANK

WASHETERIA
ROOF FRAMING PLAN

CHEFORNAK, ALASKA

CE2 ENGINEERS, INC.
PO BOX 220246 ANCHORAGE, AK 99503 PH: 907-349-1019 FAX: 907-349-1015

REVISION	BY	DATE

Project No. 32488
Date 6/2/14
Designed BGO
Drawn RRJ
Approved OAI

Sheet No.
S3.1
SHEET ____ OF ____

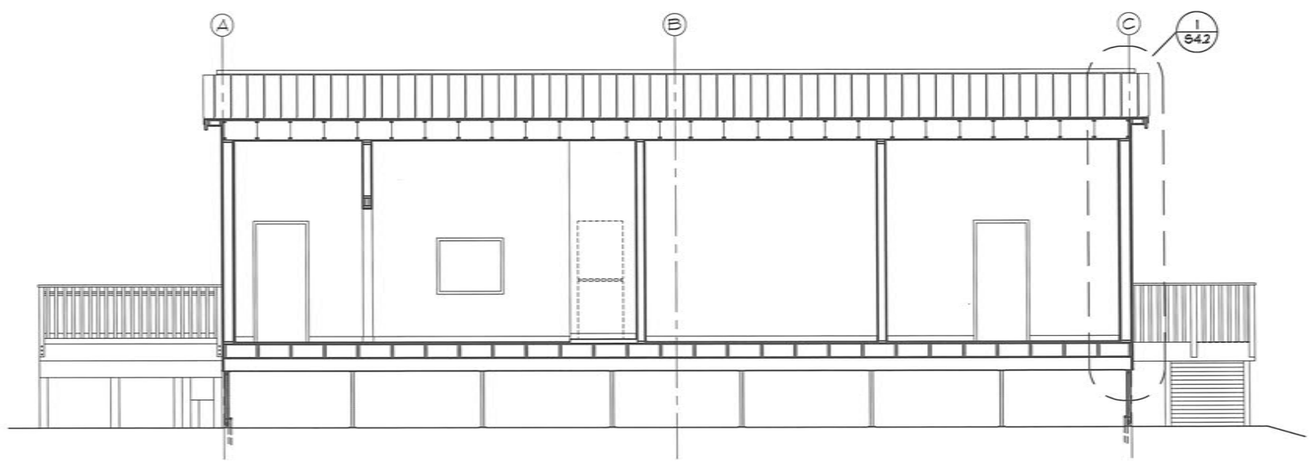

2 S4.1 Building Section
Scale: ¼" = 1'-0"

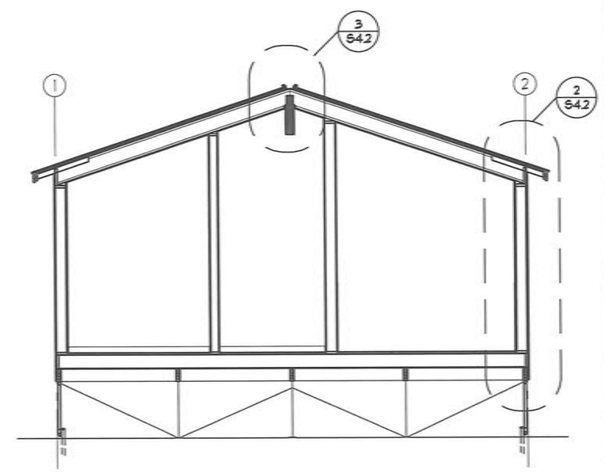

1 S4.1 Building Section
Scale: ¼" = 1'-0"

65% DOCUMENTS

Olen Associates, Inc.
Construction Management Engineering Inspections
14020 Hilltop Drive
Eagle River, AK 99577
Phone: (907) 694-6901
Fax: (907) 694-6905
email: bolen@gci.net

SCALE:
AS SHOWN

BAR IS ONE INCH ON ORIGINAL DRAWING
0 1"

IF NOT ONE INCH ON THIS SHEET, ADJUST SCALES ACCORDINGLY

CONSTRUCTION RECORD	
FIELD BOOK	
STAKING	
FOREMAN	
AS-BUILT	
INSPECTOR	

STATE OF ALASKA
BENJAMIN C. CRAIG
9-21-14
REGISTERED PROFESSIONAL ENGINEER

WASHETERIA AND WATER TANK

WASHETERIA BUILDING SECTIONS

CHEFORNAK, ALASKA

CE2 ENGINEERS, INC.
PO BOX 220246 ANCHORAGE, AK 99503 PH: 907-349-1010 FAX: 907-349-1015

REVISION	BY	DATE

Project No. 32488
Date 9/21/14
Designed BCG
Drawn RBJ
Approved DAI

Sheet No.
S4.1
SHEET ____ OF ____

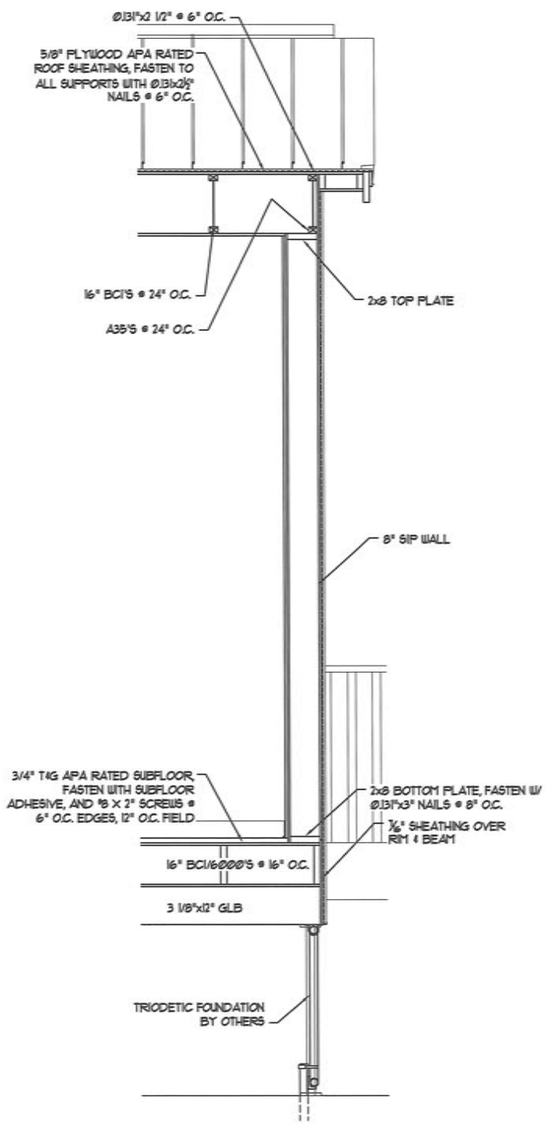

1 S4.2 Wall Section
Scale: ¾" = 1'-0"

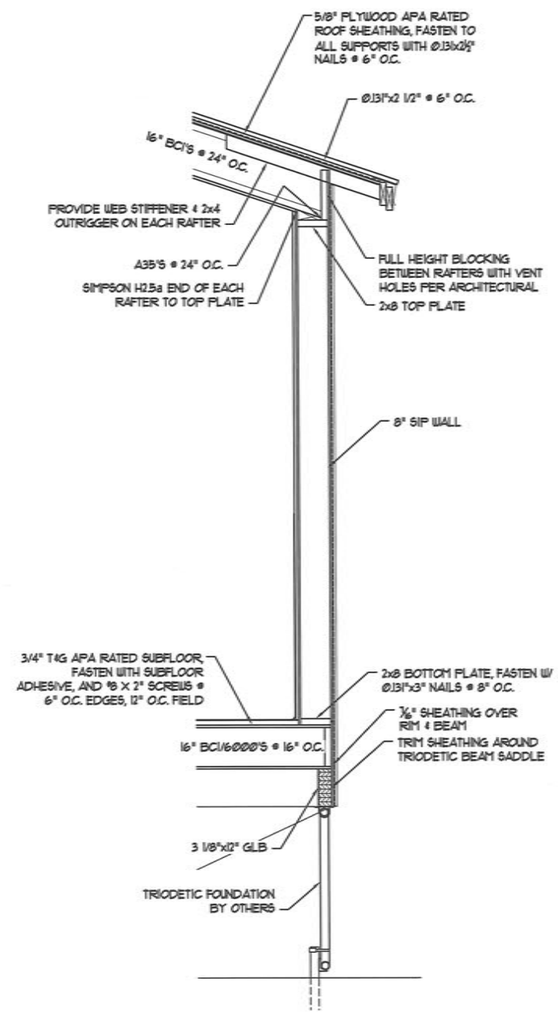

2 S4.2 Wall Section
Scale: ¾" = 1'-0"

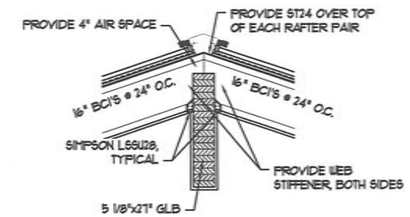

3 S4.2 Peak Detail
Scale: ¾" = 1'-0"

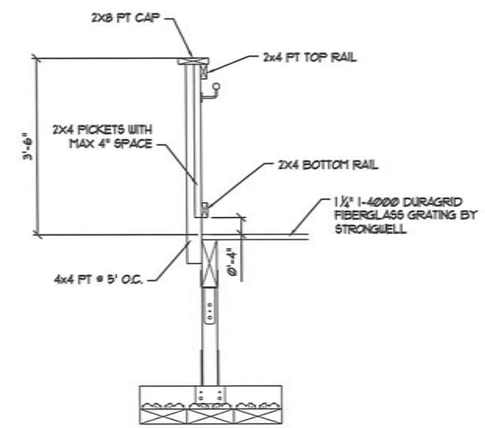

4 S4.2 Handrail Detail
Scale: ¾" = 1'-0"

65% DOCUMENTS

Olen Associates, Inc.
Construction Management Engineering Inspections
14822 Vernon Drive
Eagle River, AK 99577
Phone (907) 694-0607
Fax (907) 694-0608
email: bob@olenassociates

SCALE: AS SHOWN

BAR IS ONE INCH ON ORIGINAL DRAWING
0 1"
IF NOT ONE INCH ON THIS SHEET, ADJUST SCALES ACCORDINGLY

CONSTRUCTION RECORD
FIELD BOOK
STAMPING
FOREMAN
AS-BUILT
INSPECTOR

STATE OF ALASKA
BOB G. OLEN
9/21/14
REGISTERED PROFESSIONAL ENGINEER

WASHETERIA AND WATER TANK

WASHETERIA WALL SECTIONS

CHEFORNAK, ALASKA

CE2 ENGINEERS, INC.
PO BOX 202844 ANCHORAGE, AK 99520 PH: 907-349-1011 FAX: 907-349-1015

REVISION	BY	DATE

Project No. 32488
Date 5/21/14
Designed BGO
Drawn RBJ
Approved DAL

Sheet No. S4.2
SHEET ___ OF ___

MECHANICAL / PLUMBING SYSTEMS OVERVIEW

MECHANICAL SYSTEMS FOR THE WASHETERIA ARE DESIGNED TO UTILIZE WASTE HEAT FROM THE POWER HOUSE TO PREHEAT DRYER MAKE UP AIR, PROVIDE BUILDING HEAT, HEAT THE WATER STORAGE TANK, PROVIDE LOOP HEATING FOR THE VILLAGE WATER DISTRIBUTION SYSTEM, PROVIDE HEAT ABOVE GROUND EXPOSED PIPING, HEAT UTILAWAYS, , AND HEAT WATER FOR ON SITE LAUNDRY AND FOR ON SITE BATHROOMS. BOILER B-1 IS USED ONLY FOR PROVIDING HEAT FOR RAISING DRYER AIR TEMPERATURES TO A LEVEL ALLOWING FOR DRYING CLOTHES PROPERLY. B-2, B-3 AND B-4 PROVIDE ADDITIONAL HEAT AS REQUIRED FOR THE FACILITY.

MECHANICAL SYSTEMS ARE DESIGNED FOR MAINTENANCE BY LOCAL ON SITE PERSONNEL.
THE OUTSIDE AIR VENTILATION SYSTEM IS DESIGNED FOR OPERATION ONLY WHEN THE FACILITY IS OCCUPIED
THE DRYER MAKE UP AIR SYSTEM IS DESIGNED FOR OPERATION ONLY WHEN DRYERS ARE BEING USED

PLUMBING WATER SYSTEMS INCLUDE WATER STORAGE, WATER PUMPING, WATER HEATING, AND WATER DISTRIBUTION
PLUMBING WASTE SYSTEMS INCLUDE FIXTURE WASTE AND WASHING MACHINE WATER ROUTED TO LIFT STATION
PLUMBING VENT SYSTEMS INCLUDE FIXTURE VENT, WASHWATER VENTING AND LIFT STATION VENTING

POTABLE WATER FOR THE WASHETERIA IS TAKEN FROM THE VILLAGE WATER SUPPLY AND IS STORED IN AN ON SITE TANK
WATER IS THEN PUMPED FROM THE TANK AND DELIVERED AS HOT AND COLD TO WASHERS AND FACILITY BATHROOMS

WASTE WATER FROM THE BATHROOMS AND WASHING MACHINES IS DISCHARGED TO AN ON SITE LIFT STATION

GENERAL NOTES:

PROVIDE ALL LABOR, MATERIALS AND EQUIPMENT REQUIRED FOR COMPLETE SAFE WORKABLE SYSTEMS AS INDICATED ON THE DRAWINGS AND AS SPECIFIED. TEST ALL SYSTEMS TO ASSURE PROPER OPERATION. USE NEW EQUIPMENT OF THE LATEST DESIGN.

CONTRACTOR SHALL COMPLY WITH THE APPLICABLE LOCAL, STATE, AND NATIONAL CODES, ORDINANCES, AND REGULATIONS AFFECTING MATERIALS AND METHODS USED AND RECOMMENDED PRACTICES AS SET FORTH BY NFPA, UMC, UPC, NFC, UBC, UL, NEC EXCEPT IN CASES WHERE STATUTES GOVERN.

DURING FINAL INSPECTION, DEMONSTRATE THAT THE ENTIRE INSTALLATION OPERATES SATISFACTORILY IN ACCORDANCE WITH DRAWINGS.
PROVIDE FLUID AND AIR BALANCE OF MECHANICAL SYSTEMS AND BALANCE REPORT

INSTRUCT OWNERS PERSONNEL FOR OPERATION AND MAINTENANCE PROCEDURES.
INSTALL ALL EQUIPMENT PER MANUFACTURERS RECOMMENDATIONS.
INSTALL EQUIPMENT TO PROVIDE EASE OF ACCESS FOR MAINTENANCE.

PROVIDE ACCESS DOORS FOR CONCEALED EQUIPMENT, VALVES, DAMPERS, AND OTHER MECHANICAL DEVICES REQUIRING SERVICING OR ADJUSTMENT.

DO NOT SPRING OR BEND PIPE TO FIT CONDITIONS OR MAKE-UP JOINTS.
PROVIDE VALVES FOR BRANCH LINES AS REQUIRED OR SHOWN.
MAINTAIN CURRENT "AS-BUILTS" AS THE PROJECT PROGRESSES AND TURN THEM OVER TO THE OWNER AT THE TIME OF FINAL INSPECTION.

MECHANICAL DRAWING LIST

M-1.0 LEGEND DRAWING LIST GENERAL NOTES MECHANICAL/PLUMBING OVERVIEW
M-1.1 EQUIPMENT LIST
M-1.2 EQUIPMENT LIST
M-1.3 MATERIAL LIST-PLUMBING
M-1.4 MATERIAL LIST-PIPING AND HVAC
M-1.5 CONTROLS-SEQUENCE OF OPERATION-MATERIALS
M-1.6 CONTROL DIAGRAMS
M-1.7 BOILER CONTROL DIAGRAMS
M-1.8 UNIT HEATER UH-1, UH-2, UH-3 CONTROL DIAGRAM
M-1.9 CONTROL DIAGRAMS
M-2.0 UNDERFLOOR PLUMBING PLAN
M-2.1 PLUMBING PLAN
M-2.5 PLUMBING DIAGRAMS AND DETAILS
M-3.0 MECHANICAL PLAN-PIPING
M-3.1 MECHANICAL PLAN-HVAC
M-3.5 MECHANICAL DETAILS
M-3.6 MECHANICAL DETAILS
M-4.0 HEATING AND WATER SUPPLY DIAGRAM

LEGEND

SYMBOL	ABBREV.	DESCRIPTION
		FLOW ARROW
—GHS—	GHS	GLYCOL HEATING SUPPLY
—GHR—	GHR	GLYCOL HEATING RETURN
—CW—	CW	DOM. COLD WATER SUPPLY
—CWC—	CWC	DOM. COLD WATER CIRC.
—HW—	HW	DOM. HOT WATER
—WTHS—	WTHS	WATER TANK HEAT SUPPLY
—WTHR—	WTHR	WATER TANK HEAT RETURN
—W—	W	WASTE OR SEWER
-----V-----	V	VENT
—WW—	WW	WASHER WASTE WATER
----WV----	WV	WASHER VENT
	VTR	VENT THROUGH ROOF
		BALL VALVE
		PRESS. RELIEF VALVE
		CHECK VALVE
CO	C.O.	CLEAN OUT
—FOS—	FOS	FUEL OIL SUPPLY
—FOR—	FOR	FUEL OIL RETURN
	PMP-	PUMP
	ET	EXPANSION TANK
		PRESSURE GAGE'
		THERMOMETER
	TS	THERMOSTAT
NC	NC	VALVE NORMALLY CLOSED
NO	NO	VALVE NORMALLY OPEN
SC	SC	SPEED CONTROL
SW	SW	SWITCH
AAV	AAV	AUTO AIR VENT
	MAV	MANUAL AIR VENT
		CIRCUIT SETTER /BALANCING VALVE
10 X 8		DUCT WIDTH X HEIGHT
RG-1 300 CFM		GRILL NUMBER AIRFLOW AND DIRECTION
TE	TE	TEMPERATURE ELEMENT

CAPSTONE ENGINEERING LLC
MECHANICAL ENGINEERS
1210 BUSINESS BLVD. STE 6, PMB 169
EAGLE RIVER, ALASKA 99577
TELEPHONE & FAX 541-331-8357

STATE OF ALASKA
FREDERICK H BELZ
ME 6698
REGISTERED PROFESSIONAL ENGINEER
APRIL 15, 2014

LEGEND DRAWING LIST NOTES MECH/PLG OVERVIEW

CHEFORNAK WASHETERIA
CHEFORNAK, ALASKA

DATE: APRIL 15, 2014
DRAWN: F.H. BELZ
CHKD:
SCALE: AS NOTED
REVISED:
JOB NO. C 389

SHEET NO. M-1.0 | 1 OF 19

G:\ACAD\CHEFORNAK\2013 Washeteria and Water Tank\From Others\Fred Belz\C389 CHEFORNAK M-1.0 LEGEND, NOTES, OVERVIEW.dwg, 5/30/2014 12:13:35 PM, cmerz, Adobe PDF

BOILER SCHEDULE

NUMBER	TYPE	INPUT	OUTPUT	MFG MODEL	NOTES
B-1	HOT WATER OIL FIRED CAST IRON	189 MBH 1.35 GPH	162 MBH DOE	BURNHAM V8H4W	BASE BOILER, NO CIRCULATOR, ALASKA DOUBLE HIGH LIMITS, LOW WATER CUT OFF, INTERLOCK SWITCH FOR PUMP AND BOILER ROOM FAN, 5 AMPS / 115 V / 1 PH 7 INCH FLUE
B-2 B-3 B-4	HOT WATER OIL FIRED CAST IRON	364 MBH 2.60 GPH	299 MBH DOE	BURNHAM V8H9W	BASE BOILER, NO CIRCULATOR, ALASKA DOUBLE HIGH LIMITS, LOW WATER CUT OFF, INTERLOCK SWITCH FOR PUMP AND BOILER ROOM FAN, 5 AMPS / 115 V / 1 PH 8 INCH FLUE

COIL SCHEDULE

NUMBER	TYPE	FINNED WIDTH HEIGHT	TYPE BTUH	AIRFLOW AIR PD-MAX	EAT LAT	FLUID MIX	EFT/LFT GPM FLOW	MAX PD FLUID	SELECTION
PHC-1 PHC-2 PHC-3	CU TUBE AL FINS CASED COIL	24" WIDE 16"HIGH	HEATING 50,300 BTUH	800 CFM 0.10 WC	70 F EAT 125 F LAT	PROP GLYCOL 50/50	180 F EFT 160 F LFT 5.2 GPM	2.0 FT	3 ROW COIL,5/8 TUBES,4 CIRCUIT MFG: SUPER RADIATOR 24 X 16-3R-0.625/72 LH COIL
HC-1 HC-2 HC-3	CU TUBE AL FINS CASED COIL	24" WIDE 16"HIGH	HEATING 44,750	800 CFM 0.15 WC	125 F EAT 175 F LAT	PROP GLYCOL 50/50	205 F EFT 190 F LFT 6.3 GPM	2.0 FT	3 ROW COIL,5/8 TUBES,4 CIRCUIT MFG: SUPER RADIATOR 24 X 16-3R-0.625/72 LH COIL

PUMP SCHEDULE

NUMBER	TYPE	FLUID PUMPED	GPM	FLUID-TDH FLUID TEMP	PUMP SELECTION
PMP-1A PMP-1B	INLINE CIRCULATOR WET ROTOR	PROP GLYCOL 50/50	21 GPM	17 FT TDH 205 F	GRUNDFOS UPS 32-80/2 1/2 HP / 208 V / 1 PH
PMP-2A PMP-2B	INLINE CIRCULATOR WET ROTOR	PROP GLYCOL 50/50	88 GPM	42 FT TDH 180 F	GRUNDFOS UPS 50-240/2 2 HP / 208 V / 3 PH
PMP-3	INLINE CIRCULATOR WET ROTOR	ETHYL GLYCOL 50/50	91 GPM	10 FT TDH 190 F	GRUNDFOS MAGNA3-50-80F 18.5-325 W / 208 V / 3 PH
PMP-4	INLINE CIRCULATOR JET PUMP	WATER	15 GPM	17 FT TDH 50 F	GOULDS J5S 1/2 HP / 115 V / 1 PH
PMP-5	INLINE CIRCULATOR WET ROTOR	ETHYL GLYCOL 50/50	33 GPM	12 FT TDH 190 F	GRUNDFOS UPS 32-80/2 1/2 HP / 208 V / 3 PH
PMP-6A PMP-6B	PRESSURE PUMP JET PUMP	WATER	25 GPM	50 PSIG 50 F	GOULDS J15S 1 1/2 HP / 115 V / 1 PH
PMP-7	INLINE CIRCULATOR WET ROTOR	COLD WATER	5 GPM	20 FT TDH 50 F	GRUNDFOS UPS 26-64F 1/12 HP / 115 V / 1 PH
PMP-8	INLINE CIRCULATOR WET ROTOR	PROP GLYCOL 50/50	16.5 GPM	52 FT TDH 80 F	GOULDS SSVRA8F60 1/2 HP/ 208 V/3 PH / 60 HZ

UNIT HEATER SCHEDULE

NUMBER	TYPE	OUTPUT	FLUID	EGT/LGT FLOW	MFG MODEL	NOTES
UH-1 UH-2 UH-3	HOT WATER PROPELLOR TYPE	100 MBH	50/50 PROP GLYCOL	180 F EGT 155 F LGT 9 GPM	MODINE HC 165	1/3 HP / 115 V / 1 PH TE MOTOR
UH-4 UH-5 UH-7 UH-9	HOT WATER PROPELLOR TYPE	40 MBH	50/50 PROP GLYCOL	180 F EGT 155 F LGT 3.6 GPM	MODINE HC 86	1/8 HP / 115 V / 1 PH TE MOTOR
UH-6 UH-8	HOT WATER CABINET TYPE	4 MBH	50/50 PROP GLYCOL	180 F EGT 150 F LGT 1.0 GPM	BEACON MORRIS K 42	1/10 HP / 115 V / 1 PH RECESSED WALL MOUNTING KIT
BH-1 BH-2	HOT WATER RADIANT PANEL	1.5 MBH	50/50 PROP GLYCOL	180 F EGT 150 F LGT 1.0 GPM	AEROTECH RLMF 24 X 48	PROVIDE SURFACE MOUNT FRAME KIT FOR MOUNTING

FAN SCHEDULE

NUMBER	TYPE	CFM	EXT STATIC	MFG MODEL	NOTES
EF-1	INLINE FAN	220 CFM	0.4 IN WC	FANTEC FG-8	118 WATTS / 115 V / 1 PH W/SPEED CONTROL STEEL HOUSING/ 8 INCH FLANGES
EF-2 EF-3	INLINE FAN	300 CFM	0.4 IN WC	FANTEC FG-8	118 WATTS / 115 V / 1 PH W/SPEED CONTROL STEEL HOUSING/ 8 INCH FLANGES
BRF-1	INLINE FAN	1500 CFM	0.4 IN WC	GREENHECK BSQ-140-3	1/3 HP / 115 V / 1 PH BELT DRIVE/ SINGLE DRIVE, TE MOTOR/ GREASEABLE BEARINGS W/ LUBE LINES/ TOGGLE SWITCH, HANGING RUBBER ISOLATORS
MUF-1	INLINE FAN	840 CFM	0.6 IN WC	GREENHECK BSQ-120-3	1/3 HP / 115 V / 1 PH BELT DRIVE/ SINGLE DRIVE, TE MOTOR/ GREASEABLE BEARINGS W/ LUBE LINES/ TOGGLE SWITCH, HANGING RUBBER ISOLATORS
CF-1 CF-1 CF-1	CEILING FAN	12,500 CFM	0 IN WC	LEADING EDGE 3620-1	.65 AMPS / 115 V / 1 PH WITH 12003 SPEED CONTROL

EXPANSION AND PRESSURE TANK SCHEDULE

NUMBER	TYPE	ACCEPT-ANCE	FLUID TEMP	MFG MODEL	NOTES
ET-1	BLADDER EXPANSION	30 GAL	PROP GLYCOL	AMTROL SX 90	180 F GLYCOL SYSTEM EXPANSION TANK
ET-2	BLADDER EXPANSION	3.2 GAL	PROP GLYCOL	AMTROL EX 90	205 F GLYCOL SYSTEM EXPANSION TANK
ET-3	BLADDER EXPANSION	4.4 GAL	HOT WATER	AMTROL ST-12C	120 F POTABLE WATER
HT-1A HT-1B	BLADDER PRESSURE WELL TYPE	25 GAL 30/50	COLD WATER	AMTROL WX-256	60 F POTABLE WATER
ET-4	PRESSURE WELL TYPE	30/50	PROP GLYCOL	AMTROL WX-256	70 F GLYCOL SYSTEM EXPANION

CAPSTONE ENGINEERING LLC
MECHANICAL ENGINEERS
12110 BUSINESS BLVD. STE 6, PMB 169
CHEFORNAK, ALASKA 99922
TELEPHONE & FAX 541-331-8357

STATE OF ALASKA
FREDERICK H BELZ
ME 6498
REGISTERED PROFESSIONAL ENGINEER

APRIL 15, 2014

EQUIPMENT LIST
CHEFORNAK WASHETERIA
CHEFORNAK, ALASKA

DATE: APRIL 15, 2014
DRAWN: F.H. BELZ
CHKD:
SCALE: AS NOTED
REVISED:
JOB NO: C 389

SHEET NO. M-1.1 | 2 OF 19

G:\ACAD\CHEFORNAK\2013 Washeteria and Water Tank\From Others\Fred Belz\C389 CHEFORNAK M-1.1 EQUIPMENT LIST.dwg, 5/30/2014 12:12:34 PM, cmerz, Adobe PDF

HEAT EXCHANGER SCHEDULE

NUMBER	TYPE	HOT SIDE	HOT SIDE FLOW	COLD SIDE	COLD SIDE FLOW	CAPACITY	MFG: MODEL NUMBER
HX-1	PLATE & FRAME DOUBLE WALL	170 EGT 135F LGT 3 PSI PD MAX	10 GPM 50/50 ETHYL GLYCOL	45 F EWT 75 F LWT 3 PSI PD MAX	10 GPM WATER	300 MBH	AMERIDEX X-5-14 2"NPT PORTS
HX-2	PLATE & FRAME SINGLE WALL	185F EGT 165F LGT 3 PSI PD MAX	91 GPM 50/50 ETHYL GLYCOL	155F EGT 175F LGT 3 PSI PD MAX	88 GPM 50/50 PROP GLYCOL	800 MBH	AMERIDEX X-30-47 4"PORTS-150# FLANGED
HX-3	PLATE & FRAME SINGLE WALL	175F EGT 155F LGT 3 PSI PD MAX	17 GPM 50/50 ETHYL GLYCOL	60 F EGT 80 F LGT 3 PSI PD MAX	17 GPM 50/50 PROP GLYCOL	150 MBH	AMERIDEX SL-70-20-TK 1 1/2"NPT PORTS

UNIT HEATER SCHEDULE

NUMBER	TYPE	OUTPUT	FLUID	EGT/LGT FLOW	MFG MODEL	NOTES
UH-1 UH-2 UH-3	HOT WATER PROPELLOR TYPE	100 MBH	50/50 PROP GLYCOL	180 F EGT 155 F LGT 9 GPM	MODINE HC 165	1/3 HP / 115 V / 1 PH TE MOTOR
UH-4 UH-5 UH-7 UH-9	HOT WATER PROPELLOR TYPE	40 MBH	50/50 PROP GLYCOL	180 F EGT 155 F LGT 3.6 GPM	MODINE HC 86	1/8 HP / 115 V / 1 PH TE MOTOR
UH-6 UH-8	HOT WATER CABINET TYPE	4 MBH	50/50 PROP GLYCOL	180 F EGT 150 F LGT 1.0 GPM	BEACON MORRIS K 42	1/10 HP / 115 V / 1 PH RECESSED WALL MOUNTING KIT
BH-1 BH-2	HOT WATER RADIANT PANEL	1.5 MBH	50/50 PROP GLYCOL	180 F EGT 150 F LGT 1.0 GPM	AEROTECH RLMF 24 X 48	PROVIDE FK 24 FLANGE KIT RECESSED CEILING MOUNT

HOT WATER MAKER SCHEDULE

NUMBER	TYPE	DEMAND	HEATING BTUH	GLYCOL FLOWS	SELECTION
HWM-1	TANK TYPE DW COIL SS CONST	202 GPH 40 F EWT 115F LWT	HEATING 118 K BTUH	180 F EGT 155 F LGT 10 GPM	SUPERSTOR SSU-80 DW WITH MFG RECOMMENDED CONTROLLER
HWM-2	TANK TYPE DW COIL SS CONST	70 GPH 40 F EWT 115F LWT	HEATING 30 K BTUH	180 F EGT 150 F LGT 3 GPM	SUPERSTOR SSU-60 DW WITH MFG RECOMMENDED CONTROLLER

DAMPER SCHEDULE-MOTORIZED - CONTROL- BACKDRAFT

NUMBER	TYPE	SIZE	CONTROL	MFG MODEL
CD-1	LOW LEAKAGE OBD	14"WIDE X 8"HIGH	LOCKING QUADRANT	RUSKING CD-50 WITH LOCKING QUADRANT
CD-2	LOW LEAKAGE OBD	14"WIDE X 8"HIGH	LOCKING QUADRANT	RUSKING CD-50 WITH LOCKING QUADRANT
CD-3	LOW LEAKAGE OBD	12"WIDE X 10"HIGH	LOCKING QUADRANT	RUSKING CD-50 WITH LOCKING QUADRANT
BDD-1	INLINE BACKDRAFT DAMPER	10"WIDE X 8"HIGH	COUNTER WEIGHT	RUSKIN CBD2 OR EQUAL
MD-1	INLINE MOTORIZED DAMPER	48"WIDE X 10"HIGH	DAMPER MOTOR	RUSKIN CD-50 WITH BELIMO LF24 SPRING RETURN ACTUATOR 24 VAC 7 VA-35 IN LB
MD-2	INLINE MOTORIZED DAMPER	10"WIDE X 8"HIGH	DAMPER MOTOR	RUSKIN CD-50 WITH BELIMO LF24 SPRING RETURN ACTUATOR 24 VAC 5 VA-35 IN LB
MD-3	INLINE MOTORIZED DAMPER	10"WIDE X 10"HIGH	DAMPER MOTOR	RUSKIN CD-50 WITH BELIMO LF24 SPRING RETURN ACTUATOR 24 VAC 5 VA-35 IN LB

DAY TANK

DT-1 DAY TANK: 50 GALLON TANK WITH 150 PERCENT CONTAINMENT BASIN. SINGLE TRANSFER TANK FILL PUMP 1/3 HP / 115 V / 1 PH. INCLUDES LEVEL GAGE, MANUAL FILL CAP, CONTROLS, CONTAINMENT ALARM, LEVEL CONTROL, PANEL, SOLENOID 3/4" SHUTOFF VALVE, 4 DIP TUBES FOR BOILERS, PRIMER PUMP FOR FILL PUMP MFG: TRAMONT TRS SERIES OR APPROVED EQUAL

CAPSTONE ENGINEERING LLC
MECHANICAL ENGINEERS
12110 BUSINESS BLVD. STE 6, PMB 169
EAGLE RIVER, ALASKA 99577
TELEPHONE & FAX 541-331-8357

STATE OF ALASKA 49TH FREDERICK H. BELZ ME 6498 REGISTERED PROFESSIONAL ENGINEER

APRIL 15, 2014

EQUIPMENT LIST
CHEFORNAK WASHETERIA
CHEFORNAK, ALASKA

DATE: APRIL 15, 2014
DRAWN: F.H. BELZ
CHKD:
SCALE: AS NOTED
REVISED:
JOB NO. C 389

SHEET NO. M-1.2 | 3 OF 19

G:\ACAD\CHEFORNAK\2013 Washeteria and Water Tank\From Others\Fred Belz\C389 CHEFORNAK M-1.2 EQUIPMENT LIST.dwg, 5/30/2014 12:11:47 PM, cmerz, Adobe PDF

PLUMBING WATER DISTRIBUTION MATERIAL

PIPING SHALL BE TYPE L HARD DRAWN COPPER
WITH WROUGHT COPPER FITTINGS OR PEX TUBING
PEX TUBING IS TO BE USED WHERE PIPING
IS IN WALL CAVITIES
USE "BRIDGIT" OR EQUIVALENT NO-LEAD SOLDER
FOR COPPER JOINTS
FIXTURE CONNECTIONS, (TOILETS, LAVATORIES,
SINKS). SUPPLY PIPING FROM STOPS TO FIXTURE
PROVIDE STAINLESS STEEL BRAIDED FLEX CONNECTOES
(AQUAFLOW OR EQUAL).

VALVES SHALL BE FULL PORT BALL-TYPE 2" & SMALLER

USE SWEAT OF NPT CONNECTIONS

MFG: HAMMOND OR EQUAL RATED 400 PSI WOG

CHECK VALVES: 2" AND UNDER BRONZE SPRING CHECK

MFG: HAMMOND FIG. 947 C x C, U.O.N.

WATER STOPS: PROVIDE PLATED BRASS WHEELHANDLE TYPE
WITH PLATED ESCUTCHEON

PLUMBING WATER PIPING ACCESSORIES

WHA-1 WATER HAMMER ARRESTOR: MFG: SMITH 5005 OR EQUAL

TP-1 TRAP PRIMER UNIT: MFG: PPP 500 SS STAINLESS STEEL

FM-1: TANK FILL FLOW METER: INLINE TYPE RECORDING METER: RESETTABLE: 1"NPT
MFG: BADGER METER OR EQUAL

TG-1: ULTRASONIC TANK GAGE WITH DIGITAL READOUT.

PUMP CONTROLLERS

PS-1,PS-2 PUMP PRESSURE SWITCH: SQUARE D 9013FSG2J20 OR EQUAL

PLUMBING WASTE AND VENT PIPING

PROVIDE ABS, DWV COPPER, NO HUB CAST IRON, BRASS, OR OTHER
APPROVED MATERIAL. HDPE MAY BE USED FOR BUILDING SEWER,
PUMPED WASTE OR LIFT STATION VENT WHERE SUBJECT TO DAMAGE
SEE VTR DETAIL FOR VENTS

PLUMBING WASTE AND VENT PIPING ACCESSORIES

ROOF VTR FLASHING: PROVIDE DEKTITE FLASHINGS AND SEALS

ROOF VTR: PROVIDE SNOW SPLITTER PER VTR DETAIL

PLUMBING PIPING INSULATION

ALL POTABLE HOT EXPOSED WATER PIPING TO BE INSULATED WITH 1/2 INCH
THICK "MICROLOCK" RIGID WITH APT JACKET. PROVIDE ZESTON FITTINGS FOR
ELBOWS AND TEES. IN WALL PEX IS NOT INSULATED

INSULATION FOR VTR: 2"FIBERGLASS WITH VAPOR BARRIER

PLUMBING PIPING HANGERS

PROVIDE ROD AND CLEVIS OR TRAPEZE HANGERS FOR HANGING PIPING
PROVIDE PLATED HANGERS OR UNISTRUT CUSHA CLAMPS FOR COLD WATER AND
RIGID INSULATION WITH SHIELDS FOR HOT WATER.
PROVIDE WALL HANGERS AS REQUIRED

HANGER SPACING AND SWAY BRACING PER NFPA 13
PROVIDE UNISTRUT CUSH A CLAMPS FOR PUMP PIPING AREAS TO ALLOW FOR
PIPE EXPANSION AND TO REDUCE PIPE STRAIN.

PLUMBING GENERAL NOTES

PROVIDE CODE REQUIRED CLEANOUTS AT SINKS AND OTHER AREAS AND WHERE SHOWN
DISINFECT POTABLE WATER SYSTEMS PER CODE
MATERIALS AND FIXTURES SHALL BE AS SHOWN OR EQUAL,
ALL FIXTURE COLORS SHALL BE PER ARCHITECT APPROVAL
PROVIDE FLANGED CONNECTIONS OR UNIONS TO ALLOW FOR EQUIPMENT SERVICE

SEISMIC RESTRAINTS

PROVIDE CODE APPROVED WALL STRAPS FOR HOT WATER MAKERS AND HYDROPNEUMATIC TANKS
SWAY BRACE HANGING PIPING PER NFPA 13
PROVIDE GALVANIZED STEEL BASES LAGGED TO FLOOR AND BOLTED TO PUMPS FOR BASE
MOUNTED PUMPS. BASES MAY BE FORMED OR WELDED CONSTUCTION

PLUMBING FIXTURES

L-1 LAVITORY: WALL MOUNT VITROUS CHINA HANDICAP TYPE WITH SINGLE LEVER HANDICAP MIXING
FAUCET: MFG: KOHLER WITH 4 INCH CENTERS AND DELTA FAUCET W/ POP UP DRAIN.
PROVIDE WASTE PIPE COVER FOR HANDICAP PROTECTION UNDER LAV.

L-2 LAVITORY: WALL MOUNT VITROUS CHINA HANDICAP TYPE WITH SINGLE LEVER HANDICAP MIXING
FAUCET: MFG: KOHLER WITH 4 INCH CENTERS AND DELTA FAUCET W/ POP UP DRAIN.

WC-1 WATER CLOSET: TANK TYPE ELONGATED BOWL FLUSH TANK TYPE TOILET
HANDICAP HEIGHT, WITH OPEN FRONT SOLID PLASTIC SEAT. (WHITE COLOR)
MFG: KOHLER OR EQUAL, SEAT: BEMIS OR EQUAL

WC-2 WATER CLOSET: TANK TYPE ELONGATED BOWL FLUSH TANK TYPE TOILET
COMFORT HEIGHT, WITH OPEN FRONT SOLID PLASTIC SEAT. (WHITE COLOR)
MFG: KOHLER OR EQUAL, SEAT: BEMIS OR EQUAL

SH-1 SHOWER: 36 X 36 HANDICAP SHOWER MODULE: ACRYLIC FIBERGLASS REENFORCED.
ONE PIECE BARRIER FREE. TWO STAINLESS STEEL GRAB BARS, FOLD DOWN RH SEAT
SINGLE LEVER ANTI SCALD VALVE WITH WAND, VERTICAL ADJUSTIBLE WAND HOLDER.
MFG; KOHLER K12100-C WITH K-9132 DRAIN, DELTA FAUCET OR APPROVED EQUAL

SH-2 SHOWER: 36 X 36 SHOWER MODULE: ACRYLIC FIBERGLASS REENFORCED.
WITH INTEGRAL SOAP LEDGES. SINGLE LEVER HANDLE FAUCET WITH TOP SPRAY NOZZLE
MFG; KOHLER SONATA WITH K-9132 DRAIN, K9459 ACCESSORY KIT, DELTA FAUCET/ SPRAY OR APP EQUAL

LS-1 LAUNDRY SINK: FREE STANDING STAINLESS STEEL SINK. 18" X 18" WITH BACKSPLASH. MIXING FAUCET
WITH SWING SPOUT. MFG: ADVANCE TABCO 4-18-18 SINK W/ REGENCY FAUCET OR EQUAL

FD-1 FLOOR DRAIN. GENERAL DUTY TYPE SUITABLE FOR FLOOR IN AREA. ADJ HGT. MFG: SMITH OR EQUAL

FD-2 FLOOR DRAIN. GENERAL DUTY TYPE SUITABLE FOR FLOOR IN AREA. ADJ HGT. MFG: SMITH OR EQUAL

US-1 UTILTIY SINK: FLOOR SINK-MOLDED TYPE 24" X 24" X 10" D WITH WALL MIXING FAUCET.
PROVIDE WALL BACK SPLASH, MOP HOLDER. MFG: ZURN OR EQUAL

CAPSTONE ENGINEERING LLC
MECHANICAL ENGINEERS
12110 BUSINESS BLVD. STE 6, PMB 169
EAGLE RIVER, ALASKA 99577
TELEPHONE & FAX 541-884-8065

STATE OF ALASKA
FREDERICK H BELZ
REGISTERED PROFESSIONAL ENGINEER
ME 6698

APRIL 15, 2014

PLUMBING FIXTURES-MATERIALS-NOTES
CHEFORNAK WASHETERIA
CHEFORNAK, ALASKA

DATE: APRIL 15, 2014
DRAWN: F.H. BELZ
CHKD:
SCALE: AS NOTED
REVISED:
JOB NO. C389

SHEET NO. M-1.3
4 OF 19

G:\ACAD\CHEFORNAK\2013 Washeteria and Water Tank\From Others\Fred Belz\C389 CHEFORNAK M-1.3 PLUMBING MATERIALS AND DETAILS.dwg, 5/30/2014 12:10:57 PM, cmerz, Adobe PDF

GLYCOL PIPING MATERIAL

GLYCOL PIPING SHALL BE TYPE L HARD DRAWN COPPER
WITH WROUGHT COPPER FITTINGS, PEX TUBING, HDPE,
BLACK STEEL, GALVANIZED STEEL, BRASS, OR CAST IRON
USE SILVER BEARING SOLDER FOR COPPER PIPING JOINTS
VALVES SHALL BE BRASS FULL PORT BALL-TYPE
USE SWEAT OF NPT CONNECTIONS
MFG: HAMMOND OR EQUAL RATED 400 PSI WOG
CHECK VALVES: BRONZE SWING CHECK
MFG: HAMMOND OR EQUAL
NOTE: GLYCOL PIPING CONNECTIONS TO RADIATOR SYSTEM IN POWER HOUSE
SHALL FOLLOW EXISTING SYSTEM CONSTRUCTION

GLYCOL PIPING ACCESSORIED

AUTO AIR VENTS: ¼" MPT, TACO #426 OR EQUAL, MOUNTED
ON ½" BALL ISOLATION VALVE U.O.N.
FLOW CONTROL VALVES/CIRCUIT SETTERS: TACO ACUF SERIES
PRESSURE GAGES: BOURDON TUBE TYPE 2" DIAL
THERMOMETERS: STRAP ON TYPE- DIAL INDICATOR
THERMOMETERS: STRAP ON TYPE- DIAL INDICATOR
GT-1: GLYCOL MIX BARREL: NOMINAL 30 GALLON TANK:
MFG: ACE AC00032N1V2 WITH BLACKMER MODEL 414 B OR EQ
AS-1 AIR SCOOP 3 INCH SIZE MFG: TACO 436 OR EQUAL
AS-2, AS-3 AIR SCOOP 1 1/2 INCH SIZE MFG: TACO 433 OR EQUAL
MAV MANUAL AIR VENT: SCREWDRIVER VENT MFG: TACO 417 OR EQUAL
AAV AUTO AIR VENT: VENT WITH 1/2"ISOLATION VALVE MFG: TACO 418 OR EQUAL

GLYCOL PIPING INSULATION

ALL GLYCOL PIPING SHALL BE INSULATED, VALVES ARE NOT INSULATED:
INSULATION: GHS-GHR(180 F PIPING), HW PIPING: 1 INCH FIBERGLASS WITH SEALING
JACKET AND FITTING COVERS
INSULATION: GHS-GHR(205 F PIPING): 1 1/2 INCH FIBERGLASS WITH SEALING
JACKET AND FITTING COVERS

GLYCOL

GLYCOL 50-50 MIX PROPYLENE GLYCOL

GLYCOL OR FUEL OIL PIPING HANGERS

PROVIDE ROD AND CLEVIS OR TRAPEZE HANGERS FOR HANGING PIPING
PROVIDE RIGID INSULATION AND INSULATION SHIELDS AT HANGERS
PROVIDE WALL HANGERS AS REQUIRED
HANGER SPACING AND SWAY BRACING PER NFPA 13
PROVIDE UNISTRUT CUSH A CLAMPS FOR PUMP PIPING AREAS TO ALLOW FOR
PIPE EXPANSION AND TO REDUCE PIPE STRAIN.

FUEL OIL SUPPLY PIPING MATERIAL

FUEL OIL PIPING SHALL BE LOW TEMP SCH 80 BLACK STEEL A333 BLACK STEEL
WITH SOCKET WELD FITTINGS
VALVES SHALL BE BRASS FULL PORT BALL-TYPE WITH NPT CONNECTIONS
MFG: HAMMOND OR EQUAL RATED 400 PSI WOG

FUEL OIL PIPING ACCESSORIES

TL TIGER LOOP AIR ELIMINATOR (1 PER BOILER)
MFG: WESTWOOD PRODUCTS INC TIGERLOOP ULTRA OR EQUAL
FUSIBLE VALVES: FIROMATIC OR EQUAL
CHECK VALVES: FIROMATIC OR EQUAL
FF-1 FUEL FILTER: GENERAL FILTERS 1A-25B OR EQUAL (1 PER BOILER)

GLYCOL/FUEL OIL PIPING GENERAL NOTES

PROVIDE UNIONS OR FLANGES FOR SERVICE AND REPLACEMENT OF EQUIPMENT
CLEAN AND DRY ALL PIPING BEFORE PUTTING INTO SERVICE
MATERIALS AND ACCESSORIES SHALL BE AS SHOWN OR EQUAL,

BOILER INSTALLATION ACCESSORIES

PROVIDE 16 GA GALVANIZED SHEET METAL DRIP PANS UNDER
OIL BURNERS, OIL FILTERS. VALVES AND TIGER LOOPS
BOILER STACKS: SELKIRK METALBESTOS TYPE "PS"
STACK WITH TYPE 304 STAINLESS STEEL INNER AND
OUTER PIPES. VERIFY SIZES

SEISMIC RESTRAINTS

PROVIDE CODE APPROVED WALL STRAPS FOR HOT WATER MAKERS AND HYDROPNEUMATIC TANKS
SWAY BRACE HANGING PIPING PER NFPA 13
PROVIDE GALVANIZED STEEL BASES LAGGED TO FLOOR AND BOLTED TO PUMPS FOR BASE
MOUNTED PUMPS. BASES MAY BE FORMED OR WELDED CONSTUCTION

HVAC DUCT WORK

ALL MATERIAL, SEALING, AND HANGERS TO BE PER IMC AND SMACNA STANDARDS
USE ROD AND CLEVIS OR TRAPESE HANGERS IN OPEN CEILING AREAS
FLEX JOINTS AT INLINE FANS FOR VIBRATION REDUCTION
SQUARE DUCTS: DURO DYNA JR DUROLON CONNECTOR
ROUND DUCTS AT FANS AND DRYER VENTS: VENDOR: HOSECRAFT TD-1 WITH SS WORM DR CLAMPS
SEE EQUIPMENT LIST FOR BALANCING DAMPERS

DRYER VENT CAPS

DV-1 DRYER VENT CAP: WALL CAP, 8"ROUND INLET, STAINLESS STEEL. MFG: ALDES 22-408-SS
DV-2 DRYER VENT CAP: WALL CAP, 10"ROUND INLET, STAINLESS STEEL. MFG: ALDES 22-410-SS
NOTE: DRYER VENT CAPS HAVE MAGNETIC CATCH AND ARE COMMERCIAL TYPE

GRILLES AND REGISTERS

SG-1 SUPPLY GRILLE: BAR GRILL WITH HORIZONTAL BARS 14 X 10 MFG: SHOEMAKER 901-NO OBD
RG-1 RETURN GRILLE: BAR GRILL WITH HORIZONTAL BARS 10 X 10 MFG: SHOEMAKER 905 NO OBD
RG-2 RETURN GRILLE: BAR GRILL WITH HORIZONTAL BARS 10 X 6 MFG: SHOEMAKER 905 NO OBD
RG-3 RETURN GRILLE: 14 W X 20 H FILTER GRILLE MFG: SHOEMAKER 915 NO OBD
TG-1 RETURN GRILLE: BAR GRILL WITH HORIZONTAL BARS 10 X 4 MFG: SHOEMAKER 905 NO OBD

AIR FILTERS

SF-1 SUMMER FILTERS: 2 EA 20 X 25 X 1 ALUMINUM PERMANENT WASHABLE FILTER:
MFG: AAF 316-001-800 OR EQUAL
SF-2, SF-3 SUMMER AIR FILTER: 1 EA 10 X 20 X 1 ALUMINUM PERMANENT WASHABLE FILTER:
MFG: AAF 316-001-200 OR EQUAL
AF-1 AIR FILTER: 1 EA 14 X 20 X 1 FIBERGLASS DISPOSABLE FILTER:
MFG: AAF OR EQUAL

HVAC DUCT INSULATION

AIR INTAKE DUCTS WHERE SHOWN AND AS NEEDED: 2 INCH RIGID GLASS WITH FSK COVER

CAPSTONE ENGINEERING LLC
MECHANICAL ENGINEERS
12110 BUSINESS BLVD STE 6, PMB 169
EAGLE RIVER, ALASKA 99577
TELEPHONE & FAX 541-884-8065

STATE OF ALASKA
FREDERICK H BELZ
ME 6698
REGISTERED PROFESSIONAL ENGINEER
APRIL 15, 2014

PIPING AND GENERAL MATERIALS
CHEFORNAK WASHETERIA
CHEFORNAK, ALASKA

DATE: APRIL 15, 2014
DRAWN: F.H. BELZ
CHKD:
SCALE: AS NOTED
REVISED:
JOB NO. C389

SHEET NO. M-1.4

G:\ACAD\CHEFORNAK\2013 Washeteria and Water Tank\From Others\Fred Beltz\C389 CHEFORNAK M-1.4 PIPING AND GENERAL MATERIALS.dwg, 5/30/2014 12:09:19 PM, cmerz, Adobe PDF

CONTROL VALVES

CV-1, CV-2: CONTROL VALVE: 1/4 TURN MOTOR OPERATED VALVE 2 INCH NPT BRASS BODY
SS BALL, SPRING RETURN 24 VAC ACTUATOR (FAIL OPEN) MFG: HONEYWELL VB2F 1350 OR EQUAL

CV-3 THRU CV-10 CONTROL VALVE: 1/4 TURN MOTOR OPERATED VALVE 1 INCH NPT BRASS BODY
SS BALL, SPRING RETURN 24 VAC ACTUATOR (FAIL OPEN) MFG: HONEYWELL VB2F 1350 OR EQUAL

CV-11 CONTROL VALVE: 1/4 TURN MOTOR OPERATED VALVE 3/4 INCH NPT BRASS BODY
SS BALL, SPRING RETURN 24 VAC ACTUATOR (FAIL OPEN) MFG: HONEYWELL VB2F 1350 OR EQUAL

CV-12, CV-13, CV-14 CONTROL VALVE: 1/4 TURN ZONE VALVE 3/4 INCH NPT BRASS BODY
SS BALL, SPRING RETURN 24 VAC ACTUATOR MFG: TACO 570 OR EQUAL

CV-15 CONTROL VALVE: 3 WAY VALVE-MIXING SERVICE: CV=15, FNPT BRASS BODY, 24 VAC 0-10 VDC SIGNAL
MFG: HONEYWELL V5013N1063/U VALVE WITH HONEYWELL ML7425 OPERATOR. STEM UP ON POWER FAILURE

MOTORIZED DAMPERS-SEE DAMPER SCHEDULE M-1.2 FOR DETAILS

THERMOSTATS

TH-1, TH-2, TH-3, TH-4, TH-7 WALL THERMOSTATS-LINE VOLTAGEL STAT MFG: HONEYWELL T4051A W/LOCKING COVER,
TH-5, TH-6 THERMOSTAT: LOW VOLTAGE WALL STAT MFG: HONEYWELL T87 WITH LOCKING COVER
TH-8, TH-9, TH-10, TH-11: THERMOSTAT- LINE VOLTAGE ADJ DIFF MFG: HONEYWELL T631B1005 OR EQUAL

TEMPERATURE CONTROLLERS

TC-1, TC-2 TEMPERATURE CONTROL . IMMERSION TYPE STAT WITH
ADJUSTIBLE SET POINT 100 TO 240 F RANGE MFG: HONEYWELL L4006A2007 OR EQUAL

TC-3 TEMPERATURE CONTROL . IMMERSION TYPE STAT WITH
ADJUSTIBLE SET POINT 40 TO 180 F RANGE MFG: HONEYWELL L4006A1959 WITH THERMOWELL OR EQUAL

TC-4, TC-5, TC-7 TEMPERATURE CONTROL . BULB TYPE REMOTE BULB, 20 FT CAPILLARY 0-100F, 2 SPDT
3-10 F ADJUSTIBLE DIFF MFG: HONEYWELL T678A1015 OR EQUAL

TC-6, TEMPERATURE CONTROL . BULB TYPE REMOTE BULB, 10 FT CAPILLARY 80 F TO 220 F, 1 SPDT
3-10 DIFFERENTIAL ADJUSTIBLE SET POINT MFG: HONEYWELL T675F1032 OR EQUAL

MULTIPLE BOILER CONTROLLER

BCP-1 BOILER CONTROL PANEL: SEQUENCES B-1,B-2, AND B-3 BASED ON RETURN AND SUPPLY TEMPERATURE.
MFG: HONEYWELL T775P2003 OR APPROVED EQUAL

MULTIPLE UNIT HEATER CONTROLLER

UHTC-1 UNIT HEATER CONTROL PANEL: SEQUENCES UH-1, UH-2, UH-3 BASED ON ROOM AND OSA TEMPERATURE.
MFG: HONEYWELL T775P2003 OR APPROVED EQUAL

HEAT TRACE CONTROLLER

HTTC-1 HEAT TRACE CONTROL PANEL: STARTS AND STOPS PMP-8 AND RESET CONTROLS CV-17 WHILE SENSING
OUTSIDE AIR TEMP AND HEAT TRACE LOOP TEMP MFG: HONEYWELL T775R2027/U OR APPROVED EQUAL

SEQUENCE OF OPERATION-- BOILER SYSTEMS

BOILER SYSTEM #1

BOILER SYSTEM #1 BOILER B-1, PUMPS PMP-1A & PMP-1B, HC-1, HC-2, HC-3, CV-3, CV-4, CV-5
BOILER OPERATES CONTINUOUSLY ON TC-6 CONTROL: SET 200 ON/ 210 OFF PMP-1A OR PMP-1B OPERATES CONTINUOUSLY
CV-3, CV-4 , CV-5 CYCLE WHEN ASSOCIATED DRYERS OPERATE DURING LAUNDRY OCCUPIED MODE
CV-3, CV-4 , CV-5 ARE DISABLED DURING LAUNDRY UNOCCUPIED MODE

BOILER SYSTEM #2

BOILER SYSTEM #2 BOILER B-2, B-3,B-4, PUMPS PMP-2A & PMP-2B, PHC-1, PHC-2, PHC-3, BUILDING HEAT, TANK HEAT, WATER HEAT
BOILERS OPERATES CONTINUOUSLY CONTROLLED BY BCP-1, SET 180 F. PMP-2A OR PMP-2B OPERATES CONTINUOUSLY
CV-6, CV-7 , CV-8 CYCLE WHEN ASSOCIATED DRYERS OPERATE DURING LAUNDRY OCCUPIED MODE
CV-6, CV-7 , CV-8 ARE DISABLED DURING LAUNDRY UNOCCUPIED MODE
CV-1 IS OPEN AND CV-2 IS CLOSED DURING LAUNDRY OCCUPIED MODE
CV-1 IS CLOSED AND CV-2 IS OPEN DURING LAUNDRY UNOCCUPIED MODE
UNIT HEATERS UH-1, UH-2, UH-3 OPERATE FROM UHTC DURING LAUNDRY OCCUPIED MODE
UNIT HEATERS UH-1, UH-2, UH-3 ARE DISABLED DURING LAUNDRY UNOCCUPIED MODE
UNIT HEATERS UH-4, UH-5, UH-6, UH-7, UH-8, UH-9: (COIL FLOW CONTINUOUS) LINE VOLTAGE ROOM THERMOSTATS CYCLE THE FANS.
BATHROOM HEATERS: BH-1, BH-2, CV-13, CV-14, TS-3: LOW VOLTAGE TSTATS CYCLE ZONE VALVES
TANK UTILADOR HEAT TRACE: CV-12, TC-2 REMOTE BULB TSTAT: TSTAT CYCLES CV-12 AS NEEDED
HOT WATER MAKER HWM-1: HWM-1, TC-1, CV-10: TC-1 CYCLES CV-10 TO MAINTAIN TANK TERMPERATURE @ 115 F
UTILADOR-LIFT STATION HEAT TRACING: HTCP CONTROLS CV-15 AND PMP-8 TO TAKE HEAT FROM BOILER LOOP
WATER TANK HEATING: HWM-2:, TC-2, TC-3, CV-11, PMP-4, TC-3 ENABLES TC-2. CV-11 AND PMP-4 BELOW TANK TEMP OF 45 F(ADJ)
POWER HOUSE ADD HEAT TO BOILER SYSTEM: HX-2, PMP-3: TMP CONTROLS PMP-3 TO EFFECT HEAT ADD TO HEATING LOOP
BOILER ROOM FAN OPERATION: BRF-1, B-1,B-2, B-3, B-4: BOILER ROOM FAN OPERATES WHEN ANY BOILER FIRES
BOILER ROOM FAN ALSO OPERATES WHEN BOILER ROOM COOLING TSTAT (TH-11) CLOSES (SET 80 F CLOSE, 75 F OPEN)

CONTROLS(CONTINUED)

T-1 TRANSFORMER 120 VAC TO 24 VAC 150 VA FOOT MOUNTED TRANSFORMER
MFG: ALLIED 6K149 OR EQUAL. REQUIRES FUSED OR CIRCUIT BREAKER ON SECONDARY

T-2 THROUGH T-7, T-11, T-12 TRANSFORMER 115 VAC TO 24 VAC 40 VA PLATE MOUNTED
MFG: HONEYWELL AT72D-1188/U OR EQUAL.

T-8, T-9, T-10 TRANSFORMER 115 VAC TO 24 VAC 75 VA FOOT MOUNTED
MFG: HONEYWELL AT88 OR EQUAL.

CR-1 CONTROL RELAY: DPDT RELAY, 12 AMP@ 120 VAC POWER DUTY RATED CONTACTS
WITH MAX 25 VA PILOT DUTY @ 24 VAC MFG: HONEYWELL R8222D1029 OR EQUAL

CR-2 CONTROL RELAY: SPDT RELAY, 16.0 AMPS@ 120 VAC POWER DUTY

24 VAC COIL, BOX OR WALL MOUNTED, TOTALLY ENCLOSED. MFG: WHITE RODGERS 8A0-1 OR EQUAL
CSR-1 CURRENT SENSING RELAY: SPST RELAY FOR SWITCHING 24 VAC RELAY OR VALVE
BOX MOUNTED, TOTALLY ENCLOSED. MFG: HONEYWELL 32001754 OR EQUAL

LVCB-1 CIRCUIT BREAKER 10 AMP: 10 AMP RATED @ 24 VAC MFG: CARLING 4VA76 OR EQUAL

TS-1 TOGGLE SWITCH: 10 AMP RATED @ 120 VAC LIGHTED ROCKER MFG: GRAINGER 2VLN1 OR EQ

CB-1 CIRCUIT BREAKER 10 AMP RATED @ 24 VAC MFG: GRAINGER 4VA76 OR EQ

TMP TMP IS A THERMAL MANAGEMENT PANEL DEVELOPED BY AVEC TO DEVELOP A 0-10 VDC
TO CONTROL A VARIABLE SPEED PUMP USING MULTIPLE INPUTS FROM TEMPERATURE ELEMENTS

SEQUENCE OF OPERATION-- EF-2, EF-3, MD-3

EF-3 RUNS AND MD-3 OPENS ON MAKE OF TH-8 COOLING STAT SET 80 F ADJ
EF-2 RUNS ON MAKE OF TH-9 COOLING STAT SET 80 F ADJ

SEQUENCE OF OPERATION--AREA VENTILATION MUF-1, EF-1, MD-2

ON-OFF SWITCH IN OFFICE CONTROLS VENTILATION CONTROL PANEL
SWITCH ON: MUF-1 OPERATES, MD-2 OPENS AND EF-1 OPERATES
SWITCH OFF: MUF-1 STOPS, MD-2 CLOSES AND EF-1 STOPS

SEQUENCE OF OPERATION-- LAUNDRY OCCUPIED/UNOCCUPIED MODES

SEE M-1.6 FOR CONTROL DIAGRAMS

OCCUPIED MODE

PHC-1, PHC-2, PHC-3 OPERATION IS ENABLED
HC-1, HC-2, HC-3 OPERATION IS ENABLED
MD-1 IS OPEN
UH-1, UH-2, UH-3 OPERATION OF UHTC IS ENABLED
CV-1 IS OPEN AND CV-2 IS CLOSED DURING LAUNDRY OCCUPIED MODE
ALL OTHER EQUIPMENT OPERATES NORMALLY

UNOCCUPIED MODE

PHC-1, PHC-2, PHC-3 OPERATION IS DISABLED
HC-1, HC-2, HC-3 OPERATION IS DISABLED
MD-1 IS CLOSED
UH-1, UH-2, UH-3 OPERATION IS DISABLED
CV-1 IS CLOSED AND CV-2 IS OPEN DURING LAUNDRY UNOCCUPIED MODE
ALL OTHER EQUIPMENT OPERATES NORMALLY

SEQUENCE OF OPERATION PMP-7 COLD WATER SUPPLY CIRCULATOR PUMP

TC-4 AS AN OUTSIDE AIR SENSOR STARTS PUMP AT TEMPERATURES BELOW +20 F(ADJUSTIBLE)

CAPSTONE ENGINEERING LLC
MECHANICAL ENGINEERS
12110 BUSINESS BLVD. STE. 6, PMB 169
EAGLE RIVER, ALASKA 99577
TELEPHONE & FAX 541-884-8065

STATE OF ALASKA
FREDERICK H BELZ
ME 6698
REGISTERED PROFESSIONAL ENGINEER

APRIL 15, 2014

CONTROLS AND SEQUENCE OF OPERATION
CHEFORNAK WASHETERIA
CHEFORNAK, ALASKA

DATE: APRIL 15, 2014
DRAWN: F.H. BELZ
CHKD:
SCALE: AS NOTED
REVISED:
JOB NO. C389

SHEET NO. M-1.5

G:\ACAD\CHEFORNAK\2013 Washeteria and Water Tank\From Others\Fred Beltz\C389 CHEFORNAK M-1.5 CONTROLS AND SEQUENCE OF OPERATION.dwg, 5/30/2014 12:07:16 PM, cmerz, Adobe PDF

EF-2, CONTROLS

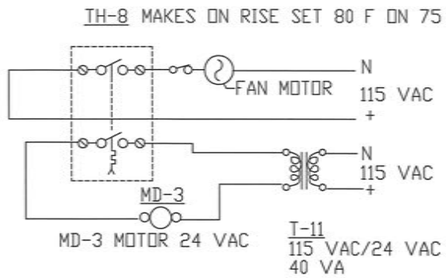

EF-3, MD-3 CONTROLS

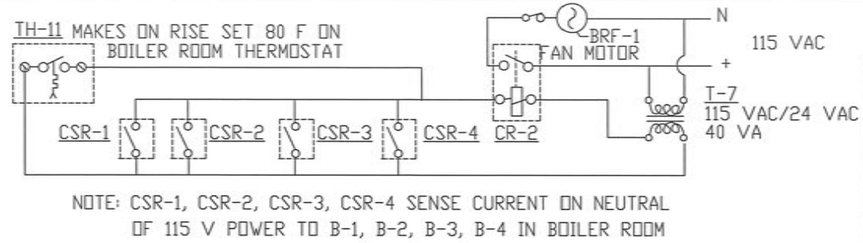

BRF-1 CONTROLS

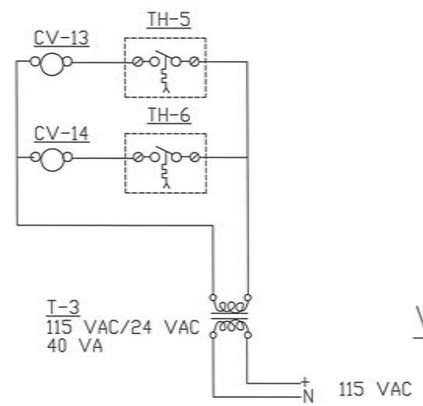

BH-1, BH-2 CONTROLS

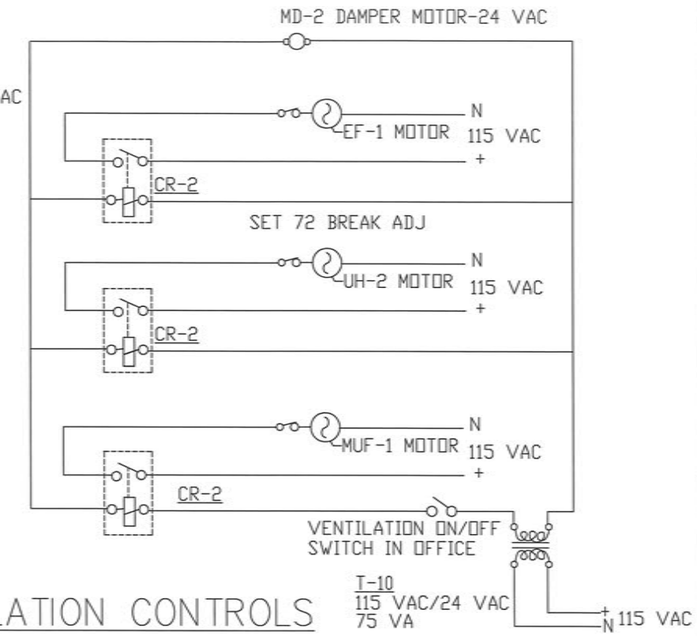

VENTILATION CONTROLS

NOTE: D-5, D-6
INTERNAL DRYER SWITCH

NOTE: D-3, D-4
INTERNAL DRYER SWITCH

NOTE: D-1, D-2
INTERNAL DRYER SWITCH

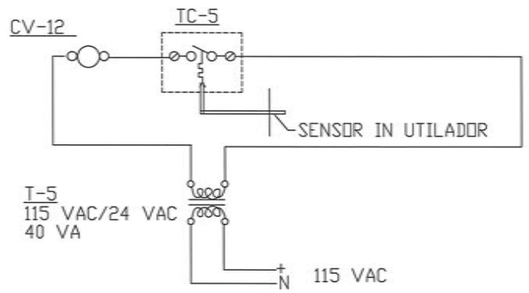

TANK UTILADOR HEAT TRACE CONTROLS

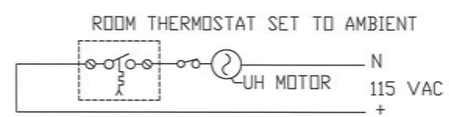

UH-4, UH-5, UH-6, UH-7, UH-8
CONTROLS

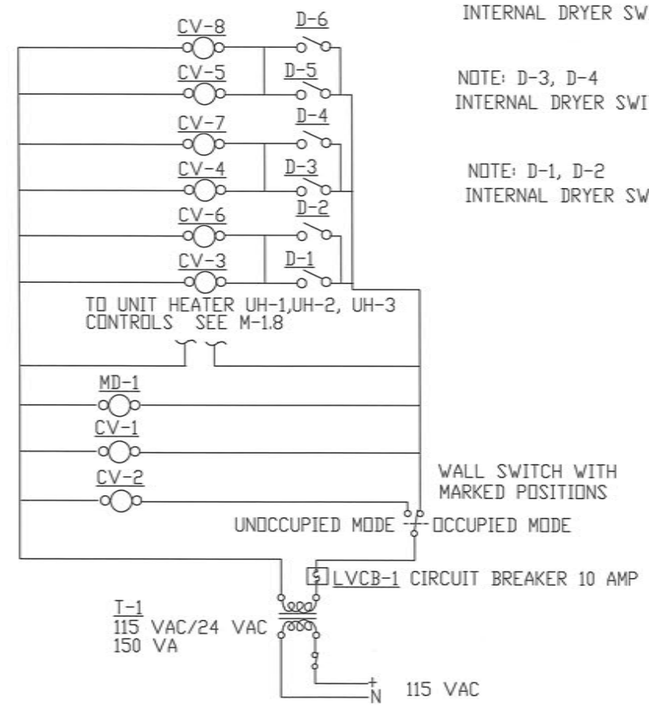

LAUNDRY OCCUPIED/ UNOCCUPIED MODE

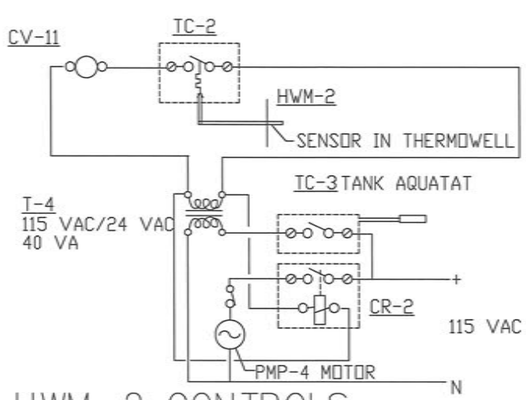

HWM-2 CONTROLS

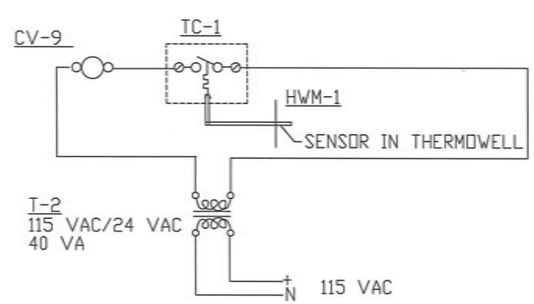

HWM-1 CONTROLS

CAPSTONE ENGINEERING LLC
MECHANICAL ENGINEERS
1210 BUSINESS BLVD. STE 6, PMB 169
EAGLE RIVER, ALASKA 99577
TELEPHONE & FAX 541-884-8665

STATE OF ALASKA
FREDERICK H BELTZ
ME 6498
REGISTERED PROFESSIONAL ENGINEER

APRIL 15, 2014

CONTROL DIAGRAMS
CHEFORNAK WASHETERIA
CHEFORNAK, ALASKA

DATE: APRIL 15, 2014
DRAWN: F.H. BELZ
CHKD:
SCALE: AS NOTED
REVISED:
JOB NO. C389

SHEET NO. M-1.6
7 OF 19

G:\ACAD\CHEFORNAK\2013 Washeteria and Water Tank\From Others\Fred Beltz\C389 CHEFORNAK M-1.6 CONTROL DIAGRAMS.DWG, 5/30/2014 12:06:30 PM, cmerz, Adobe PDF

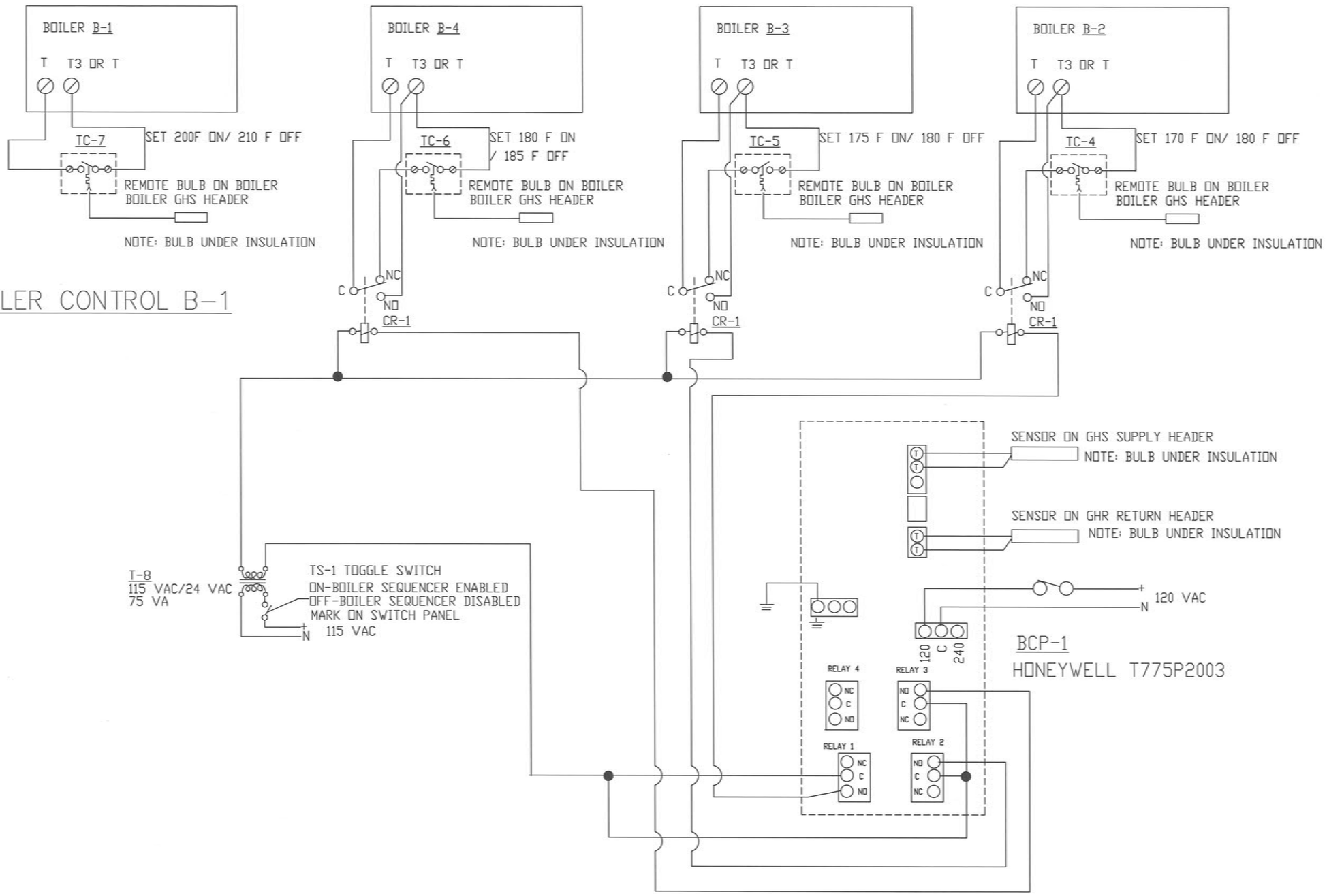

BOILER CONTROL B-3, B-4, B-5

CAPSTONE ENGINEERING LLC
MECHANICAL ENGINEERS
1210 BUSINESS BLVD. STE 6, PMB 169
EAGLE RIVER, ALASKA 99577
TELEPHONE & FAX 541-804-0065

STATE OF ALASKA
FREDERICK H BELZ
ME 6698
REGISTERED PROFESSIONAL ENGINEER

BOILER B-1, B-2, B-3, B-4 CONTROL DIAGRAM
CHEFORNAK WASHETERIA
CHEFORNAK, ALASKA

APRIL 15, 2014

DATE: APRIL 15, 2014
DRAWN: F.H. BELZ
CHKD:
SCALE: AS NOTED
REVISED:
JOB NO. C389

SHEET NO. M-1.7
8 OF 19

G:\ACAD\CHEFORNAK\2013 Washeteria and Water Tank\From Others\Fred Beltz\C389 CHEFORNAK M-1.7 BOILER B-2, B-3, B-4 CONTROLS DIAGRAM.dwg, 5/30/2014 12:05:45 PM, cmerz, Adobe PDF

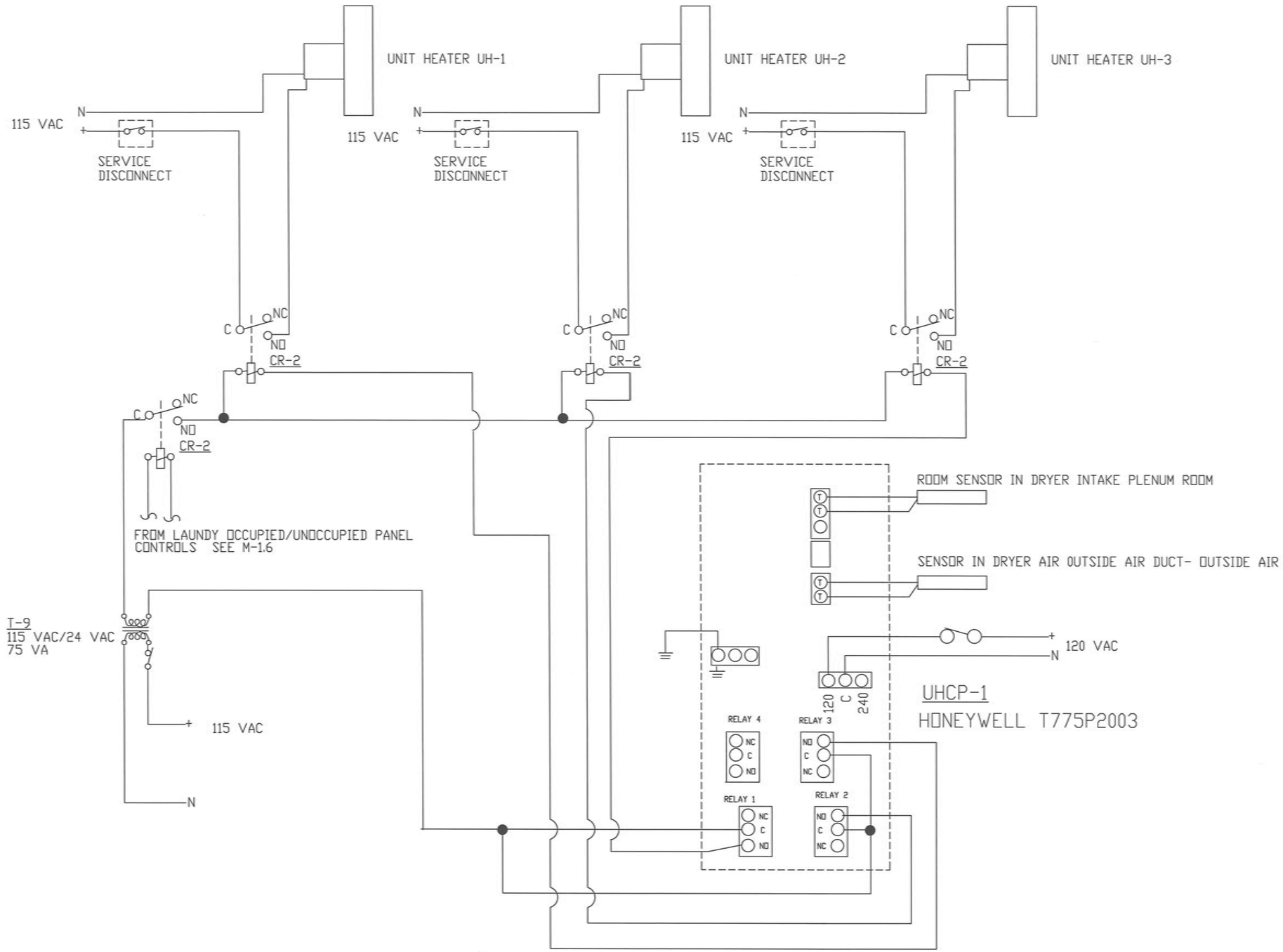

UNIT HEATER UH-1, UH-2, UH-3 CONTROL

CAPSTONE ENGINEERING LLC
MECHANICAL ENGINEERS
1210 BUSINESS BLVD. STE 6, PMB 169
EAGLE RIVER, ALASKA 99577
TELEPHONE & FAX 541-884-8665

STATE OF ALASKA
FREDERICK H. BELZ
ME 6698
REGISTERED PROFESSIONAL ENGINEER

APRIL 15, 2014

UNIT HEATER UH-1, UH-2, UH-3 CONTROLS
CHEFORNAK WASHETERIA
CHEFORNAK, ALASKA

DATE: APRIL 15, 2014
DRAWN: F.H. BELZ
CHKD:
SCALE: AS NOTED
REVISED:
JOB NO. C389

SHEET NO. M-1.8
9 OF 19

G:\ACAD\CHEFORNAK\2013 Washeteria and Water Tank\From Others\Fred Beltz\C389 CHEFORNAK M-1.8 UNIT HEATER UH-1, UH-2, UH-3 CONTROL DIAGRAM.dwg, 5/30/2014 12:02:42 PM, cmerz, Adobe PDF

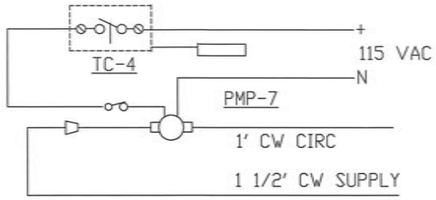

PMP-7 CONTROLS

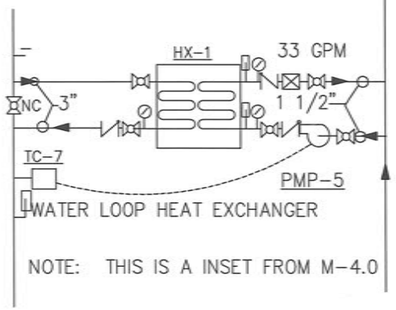

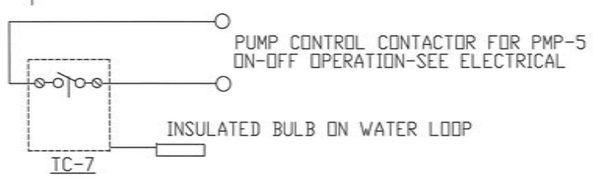

PMP-5 CONTROLS

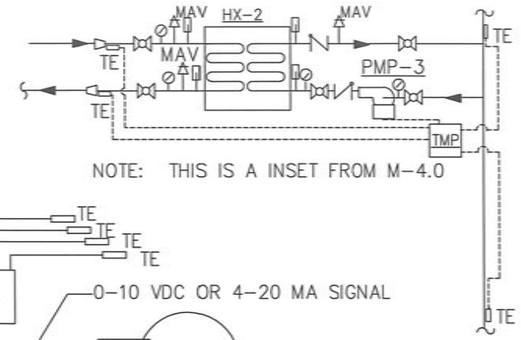

TMP

TMP IS A THERMAL MANAGEMENT PANEL DEVELOPED BY AVEC CONTROLLING A VARIABLE SPEED PUMP AND USING MULTIPLE TEMPERATURE INPUTS FROM TEMPERATURE ELEMENTS.

PMP-3 CONTROLS

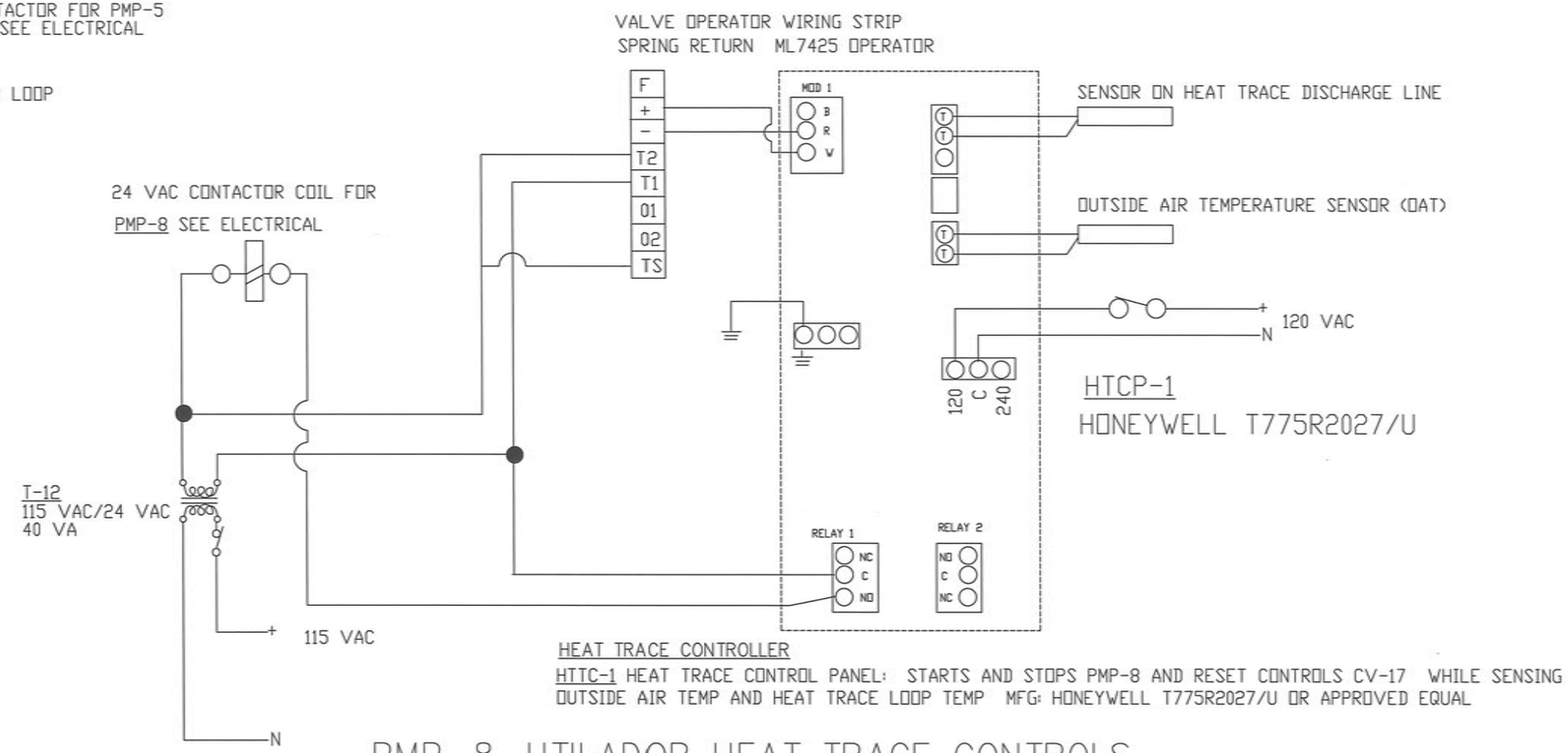

HEAT TRACE CONTROLLER

HTTC-1 HEAT TRACE CONTROL PANEL: STARTS AND STOPS PMP-8 AND RESET CONTROLS CV-17 WHILE SENSING OUTSIDE AIR TEMP AND HEAT TRACE LOOP TEMP MFG: HONEYWELL T775R2027/U OR APPROVED EQUAL

PMP-8, UTILADOR HEAT TRACE CONTROLS

CAPSTONE ENGINEERING LLC
MECHANICAL ENGINEERS
12110 BUSINESS BLVD. STE 6 - PMB 169
EAGLE RIVER, ALASKA 99577
TELEPHONE & FAX 541-884-8065

STATE OF ALASKA 49TH FREDERICK H BELZ ME 6698 REGISTERED PROFESSIONAL ENGINEER

APRIL 15, 2014

CONTROL DIAGRAMS
CHEFORNAK WASHETERIA
CHEFORNAK, ALASKA

DATE: APRIL 15, 2014
DRAWN: F.H. BELZ
CHKD:
SCALE: AS NOTED
REVISED:
JOB NO. C389

SHEET NO. M-1.9

G:\ACAD\CHEFORNAK\2013 Washeteria and Water Tank\From Others\Fred Beltz\C389 CHEFORNAK M-1.9 CONTROL DIAGRAMS.DWG, 5/30/2014 12:01:36 PM, cmerz, Adobe PDF

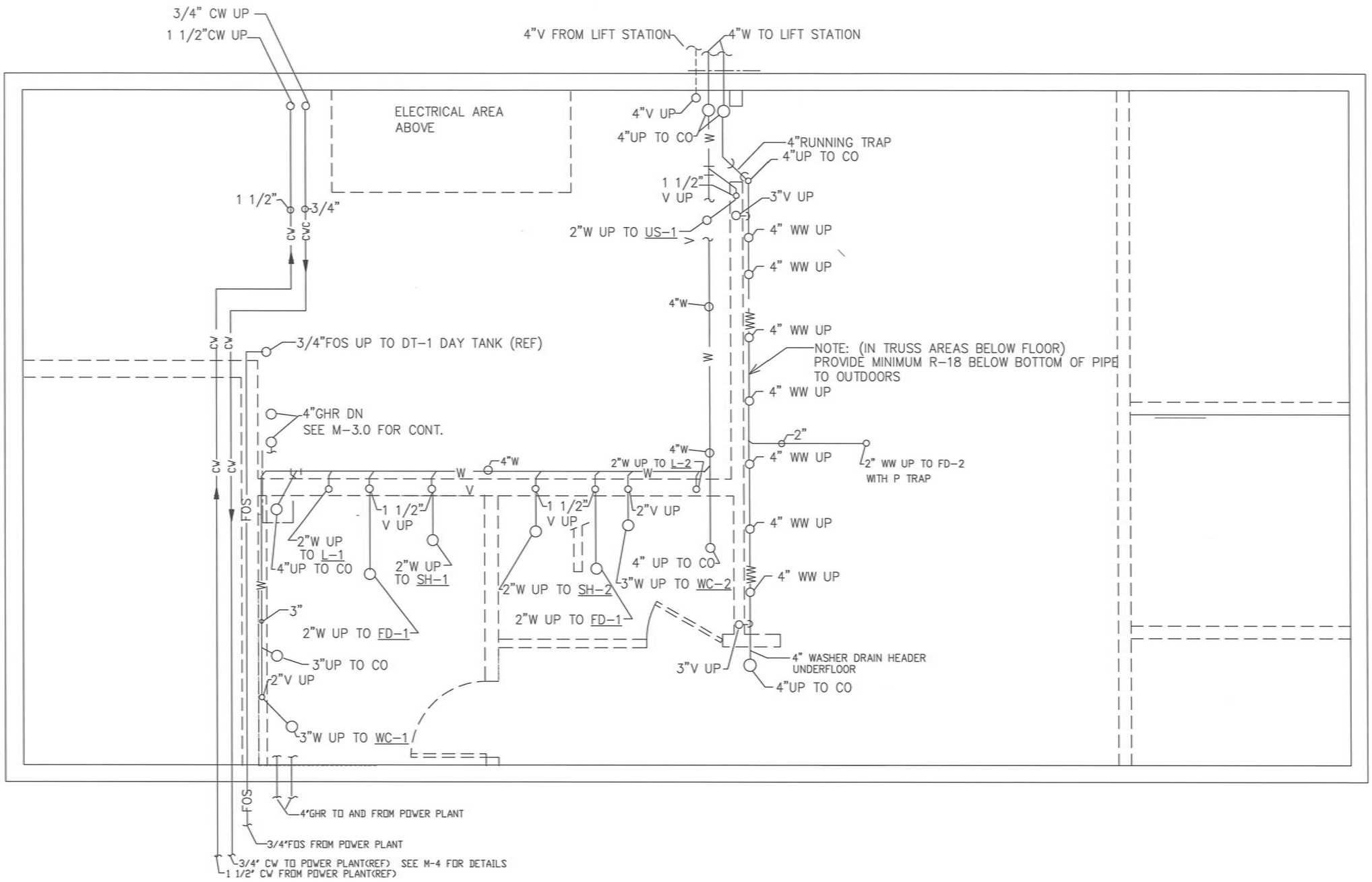

CHEFORNAK WASHETERIA UNDER FLOOR PLUMBING PLAN

SCALE 1/4"=1'-0"

CAPSTONE ENGINEERING LLC
MECHANICAL ENGINEERS
12110 BUSINESS BLVD. STE 6, PMB 169
EAGLE RIVER, ALASKA 99577
TELEPHONE & FAX 541-884-8065

STATE OF ALASKA
FREDERICK H BELZ
ME 6698
REGISTERED PROFESSIONAL ENGINEER

APRIL 15, 2014

UNDERFLOOR PLUMBING PLAN
CHEFORNAK WASHETERIA
CHEFORNAK, ALASKA

DATE: APRIL 15, 2014
DRAWN: F.H. BELZ
CHKD:
SCALE: AS NOTED
REVISED:
JOB NO. C389

SHEET NO. M-2.0

G:\ACAD\CHEFORNAK\2013 Washeteria and Water Tank\From Others\Fred Belz\C389 CHEFORNAK M-2.0 PLUMBING PLAN.dwg, 5/30/2014 12:00:38 PM, cmerz, Adobe PDF

NOTE: STRAP HT-1A, HT-1B, HWM-1 TO WALL

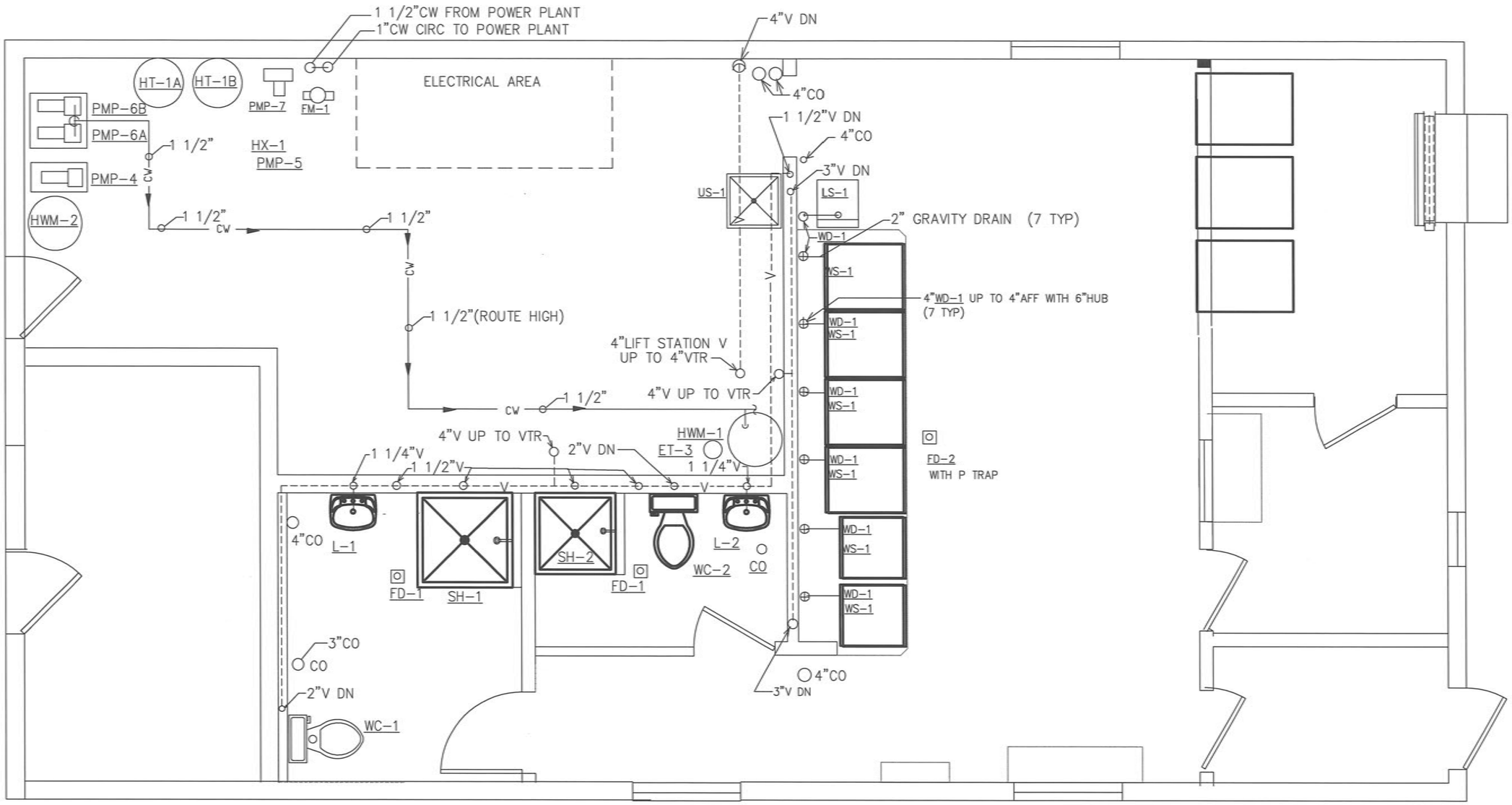

CHEFORNAK WASHETERIA PLUMBING PLAN

SCALE 1/4"=1'-0"

CAPSTONE ENGINEERING LLC
MECHANICAL ENGINEERS
12110 BUSINESS BLVD. STE. 6, PMB 169
EAGLE RIVER, ALASKA 99577
TELEPHONE & FAX 541-884-8665

STATE OF ALASKA
FREDERICK H. BELTZ
REGISTERED MECHANICAL ENGINEER
ME 6698
REGISTERED PROFESSIONAL ENGINEER

APRIL 15, 2014

PLUMBING PLAN
CHEFORNAK WASHETERIA
CHEFORNAK, ALASKA

DATE: APRIL 15, 2014
DRAWN: F.H. BELTZ
CHKD:
SCALE: AS NOTED
REVISED:
JOB NO. C389

SHEET NO. M-2.1
12 OF 19

G:\ACAD\CHEFORNAK\2013 Washeteria and Water Tank\From Others\Fred Beltz\C389 CHEFORNAK M-2.1 PLUMBING PLAN.dwg, 5/30/2014 11:58:50 AM, cmerz, Adobe PDF

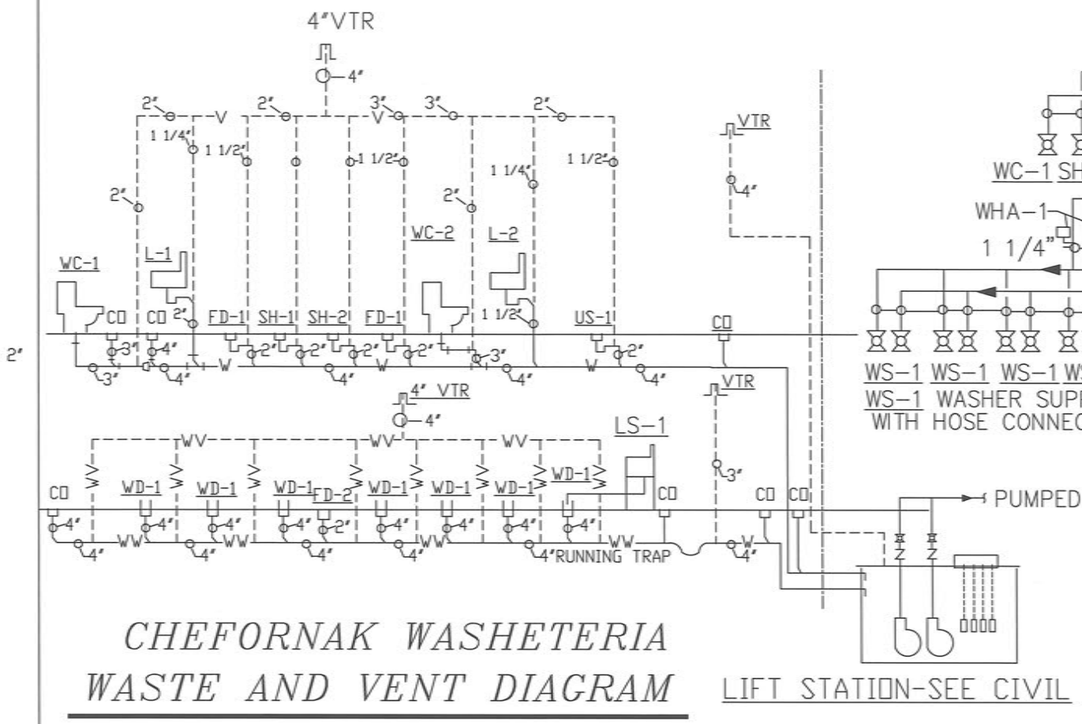

CHEFORNAK WASHETERIA WASTE AND VENT DIAGRAM

NO SCALE

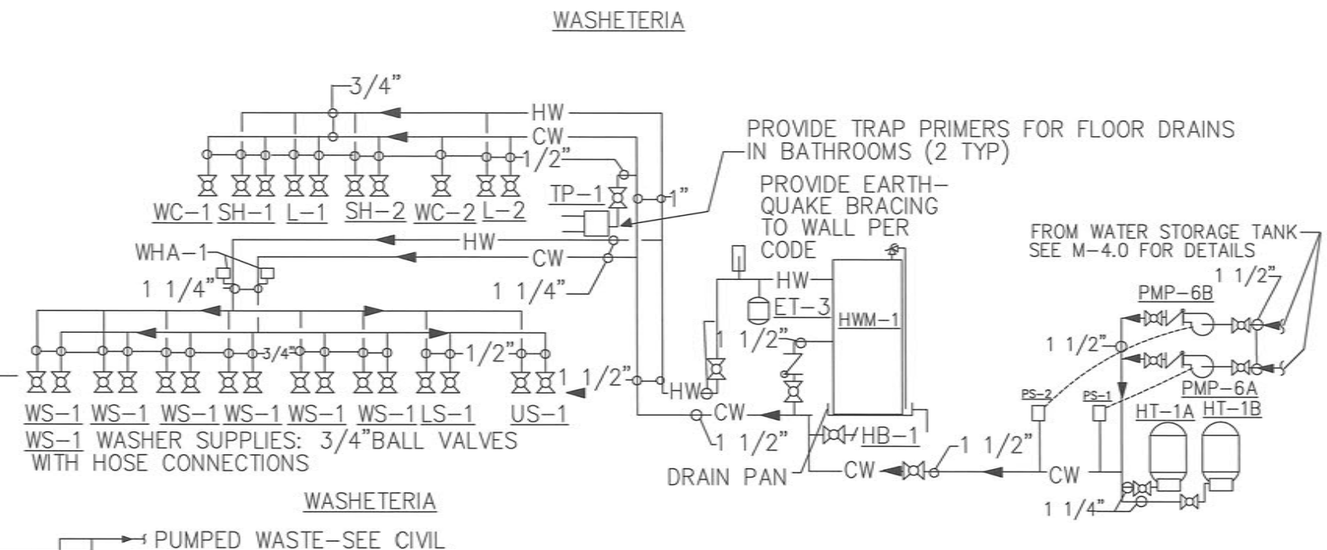

CHEFORNAK WASHETERIA WATER DIAGRAM

NO SCALE

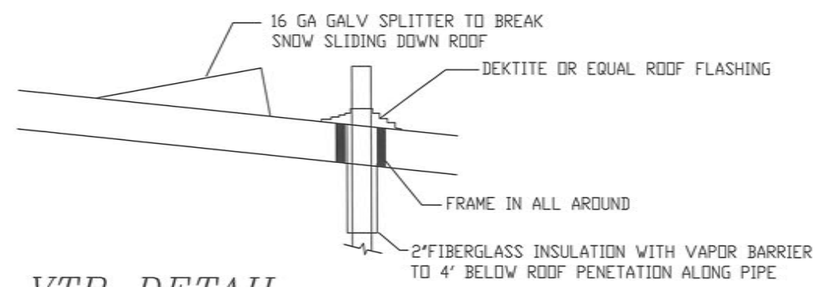

VTR DETAIL

NO SCALE

PLUMBING FIXTURE CONNECTION SCHEDULE

FIXTURE	WASTE	VENT	CW	HW	DESCRIPTION
LS-1	2"IND	1 1/2"	1/2"	1/2"	FLOOR MOUNT LAUNDRY SINK
L-1	1 1/2"	1 1/4"	1/2"	1/2"	LAVITORY
L-2	1 1/2"	1 1/4"	1/2"	1/2"	LAVITORY
WC-1	3"	2"	1/2"		WATER CLOSET-FLUSH TANK
WC-2	3"	2"	1/2"		WATER CLOSET-FLUSH TANK
FD-1	2"	1 1/2"			FLOOR DRAIN-WOOD FLOOR TYPE
FD-2	2"IND				FLOOR DRAIN-WOOD FLOOR TYPE
HB-1			1/2"		WHEEL HANDLE TYPE
WS-1			3/4"	3/4"	WASHER WATER SUPPLY-USE BALL VALVES
ET-3				3/4"	EXPANSION TANK
WD-1	4"IND				WASHER DRAIN
SH-1	2"	1 1/2"	1/2"	1/2"	SHOWER-HANDICAP
SH-2	2"	1 1/2"	1/2"	1/2"	SHOWER
US-1	2"	1 1/2"	1/2"	1/2"	UTILITY SINK

CAPSTONE ENGINEERING LLC
MECHANICAL ENGINEERS
1210 BUSINESS BLVD. STE 6, PMB 169
EAGLE RIVER, ALASKA 99577
TELEPHONE & FAX 341-884-8865

STATE OF ALASKA 49TH FREDERICK H BELZ ME 6698 REGISTERED PROFESSIONAL ENGINEER

APRIL 15, 2014

PLUMBING DIAGRAMS AND DETAILS
CHEFORNAK WASHETERIA
CHEFORNAK, ALASKA

DATE: APRIL 15, 2014
DRAWN: F.H. BELZ
CHKD:
SCALE: AS NOTED
REVISED:
JOB NO. C389

SHEET NO. M-2.5
13 OF 19

G:\ACAD\CHEFORNAK\2013 Washeteria and Water Tank\From Others\Fred Beltz\C389 CHEFORNAK M-2.5 PLUMBING DIAGRAMS AND DETAILS.dwg, 5/30/2014 11:57:58 AM, cmerz, Adobe PDF

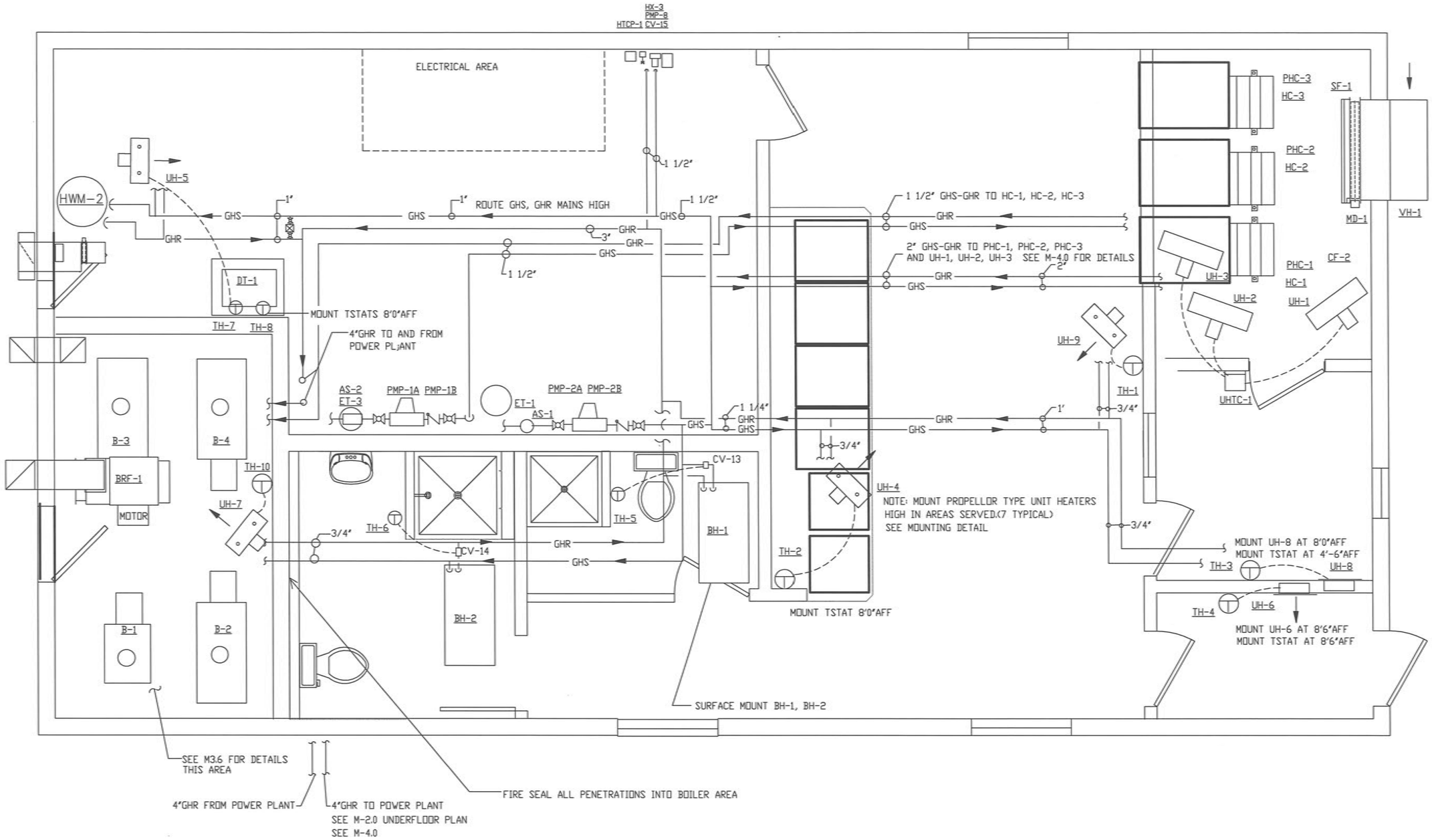

CHEFORNAK WASHETERIA PIPING PLAN

1/4"=1'-0"

CAPSTONE ENGINEERING LLC
MECHANICAL ENGINEERS
12110 BUSINESS BLVD. STE 6, PMB 169
EAGLE RIVER, ALASKA 99577
TELEPHONE & FAX 541-884-8065

STATE OF ALASKA
FREDERICK H. BELZ
MC 6698
REGISTERED PROFESSIONAL ENGINEER

APRIL 15, 2014

MECHANICAL PLAN–PIPING
CHEFORNAK WASHETERIA
CHEFORNAK, ALASKA

DATE: APRIL 15, 2014
DRAWN: F.H. BELZ
CHKD:
SCALE: AS NOTED
REVISED:
JOB NO. C389

SHEET NO. M-3.0

G:\ACAD\CHEFORNAK\2013 Washeteria and Water Tank\From Others\Fred Belz\C389 CHEFORNAK M-3.0 MECHANICAL PLAN-PIPING.dwg, 5/30/2014 11:57:02 AM, cmerz, Adobe PDF

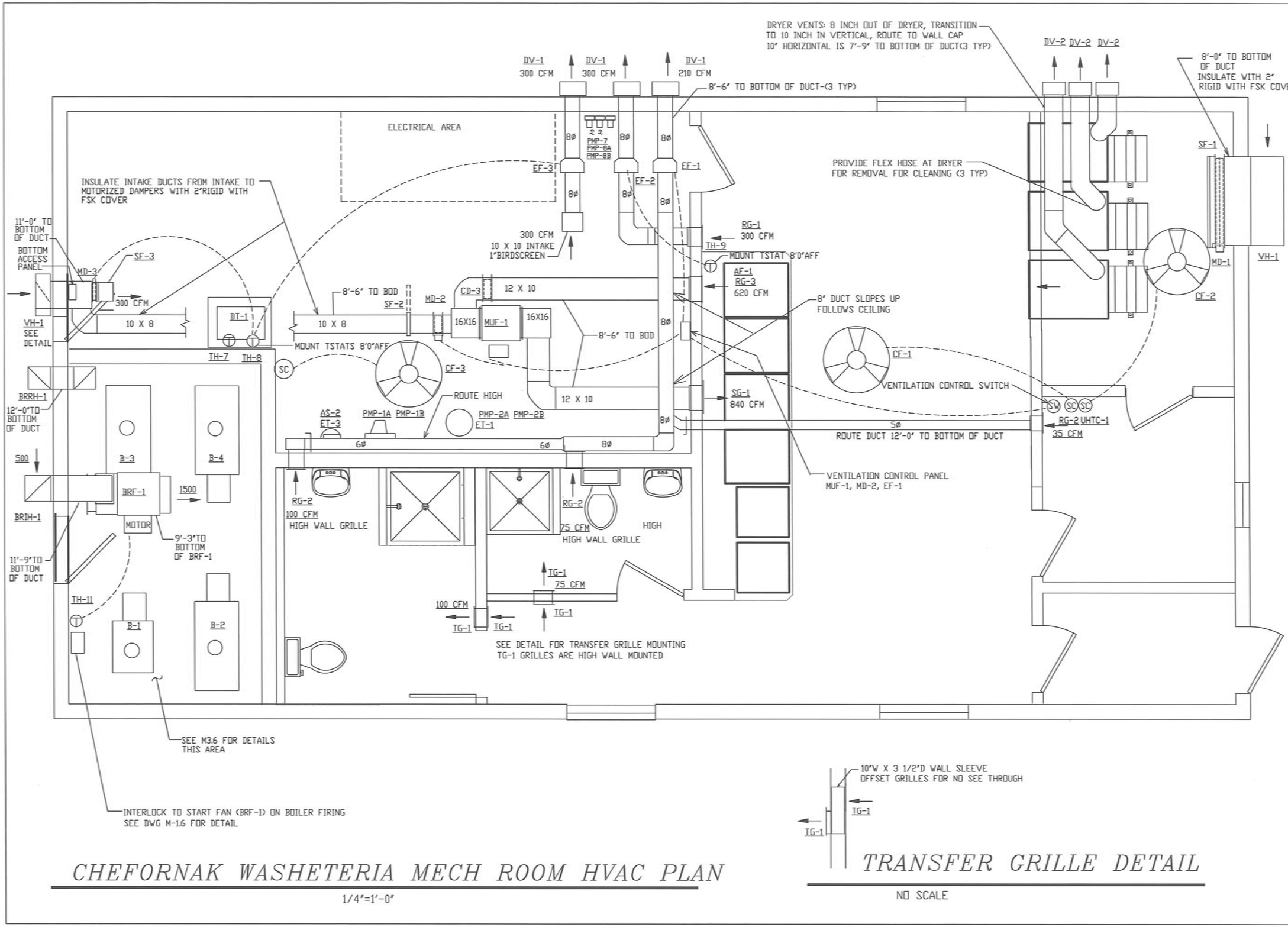

CHEFORNAK WASHETERIA MECH ROOM HVAC PLAN

1/4"=1'-0"

TRANSFER GRILLE DETAIL

NO SCALE

CAPSTONE ENGINEERING LLC
MECHANICAL ENGINEERS
12110 BUSINESS BLVD. STE 6 - PMB 169
EAGLE RIVER, ALASKA 99577
TELEPHONE & FAX 541-884-0065

STATE OF ALASKA
FREDERICK H. BELZ
ME 6698
REGISTERED PROFESSIONAL ENGINEER

APRIL 15, 2014

MECHANICAL PLAN-HVAC
CHEFORNAK WASHETERIA
CHEFORNAK, ALASKA

DATE: APRIL 15, 2014
DRAWN: F.H. BELZ
CHKD:
SCALE: AS NOTED
REVISED:
JOB NO. C389

SHEET NO. M-3.1

G:\ACAD\CHEFORNAK\2013 Washeteria and Water Tank\From Others\Fred Beltz\C389 CHEFORNAK M-3.1 MECHANICAL PLAN-HVAC.dwg, 5/30/2014 11:51:29 AM, cmerz, Adobe PDF

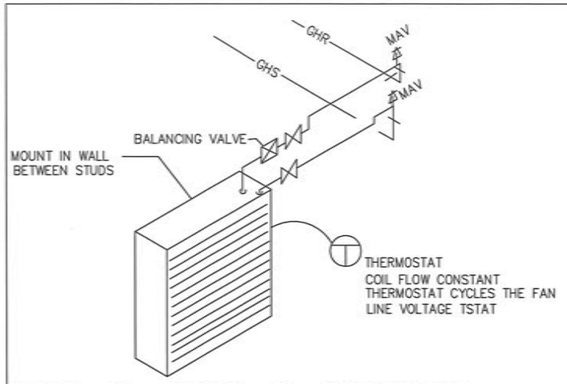

UH-6, UH-8 DETAIL

NO SCALE

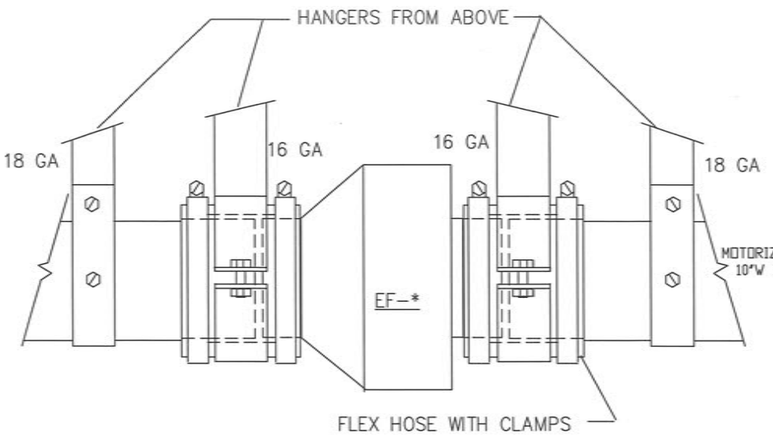

EF-1, EF-2, EF-3 DETAIL

NO SCALE

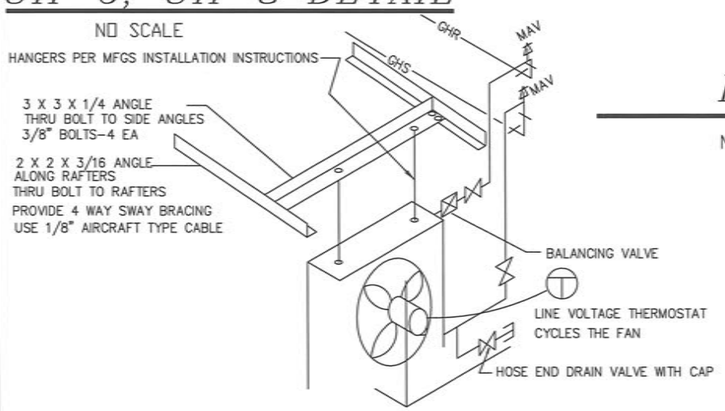

UH-1,UH-2, UH-3, UH-4, UH-5, UH-7, UH-9 UNIT HEATER MOUNTING DETAIL

NO SCALE

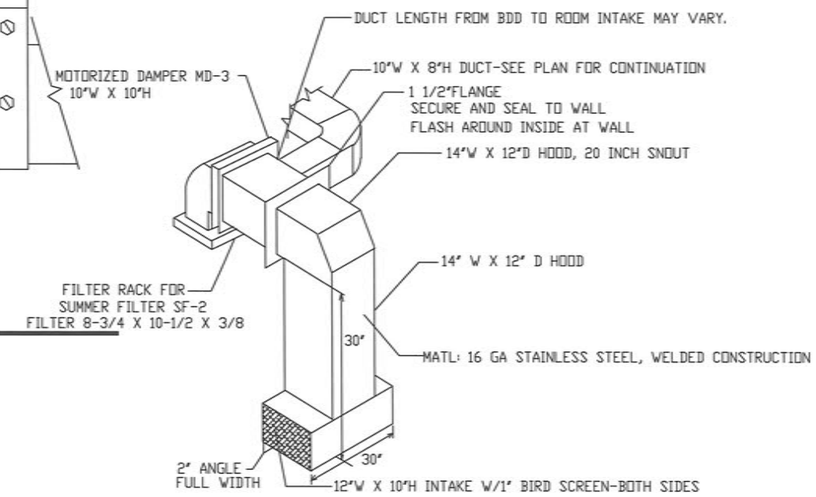

VH-1 INTAKE HOOD

NO SCALE

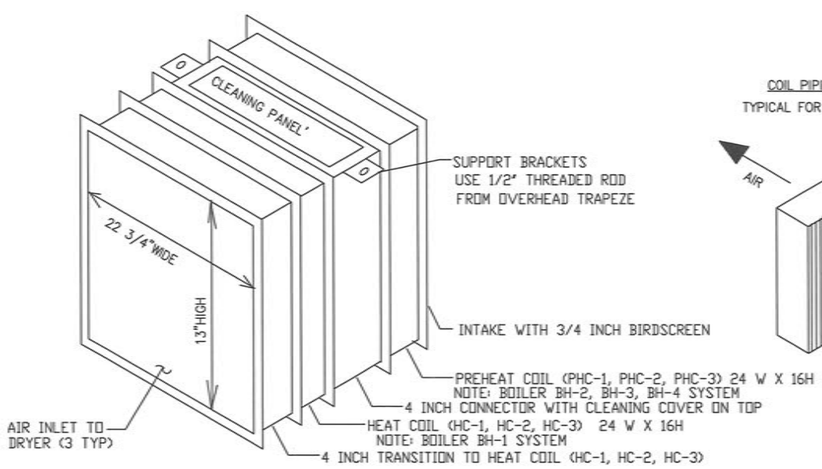

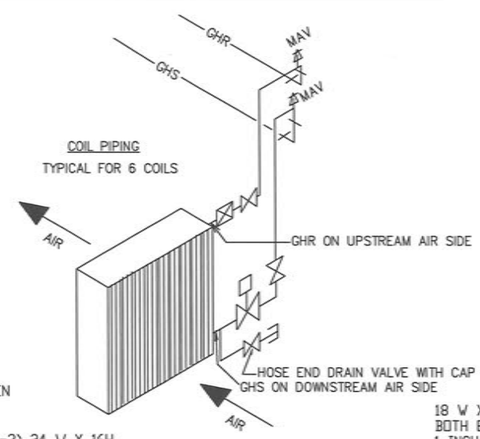

DRYER HEAT COILS- PHC AND HC

NO SCALE

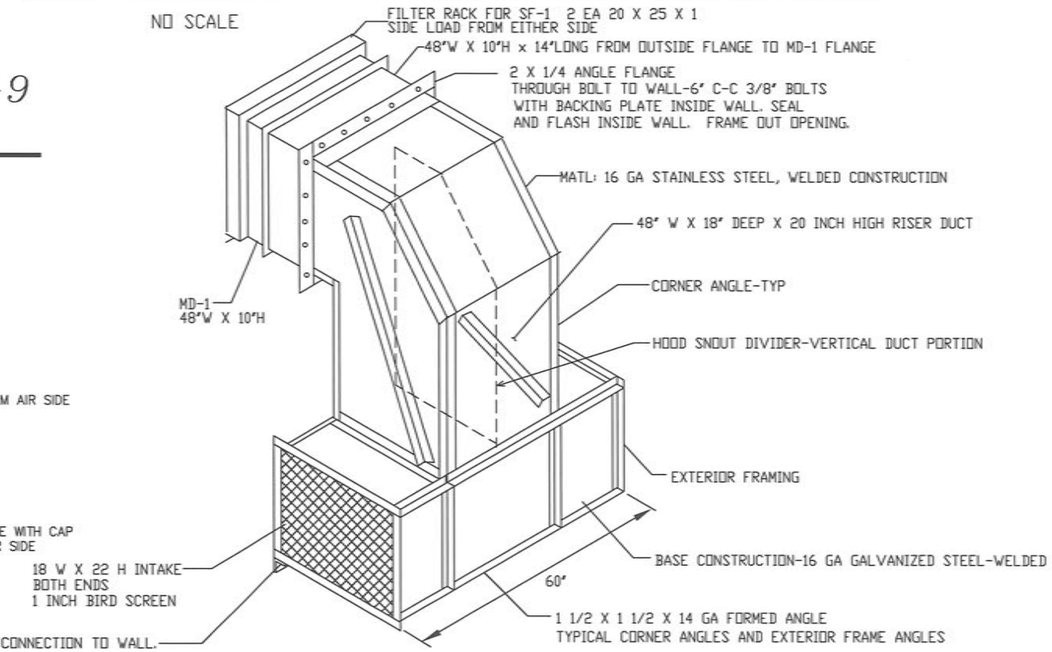

DIH-1 INTAKE HOOD DETAIL

NO SCALE

CAPSTONE ENGINEERING LLC
MECHANICAL ENGINEERS
12110 BUSINESS BLVD STE 6, PMB 169
EAGLE RIVER, ALASKA 99577
TELEPHONE & FAX 541-884-8665

STATE OF ALASKA
FREDERICK H. BELZ
ME 6698
REGISTERED PROFESSIONAL ENGINEER

APRIL 15, 2014

HVAC AND HEATING DETAILS
CHEFORNAK WASHETERIA
CHEFORNAK, ALASKA

DATE: APRIL 15, 2014
DRAWN: F.H. BELZ
CHKD:
SCALE: AS NOTED
REVISED:
JOB NO. C389

SHEET NO. M-3.5
16 OF 19

G:\ACAD\CHEFORNAK\2013 Washeteria and Water Tank\From Others\Fred Belz\C389 CHEFORNAK M-3.5 HVAC DETAILS.dwg, 5/30/2014 11:50:04 AM, cmerz, Adobe PDF

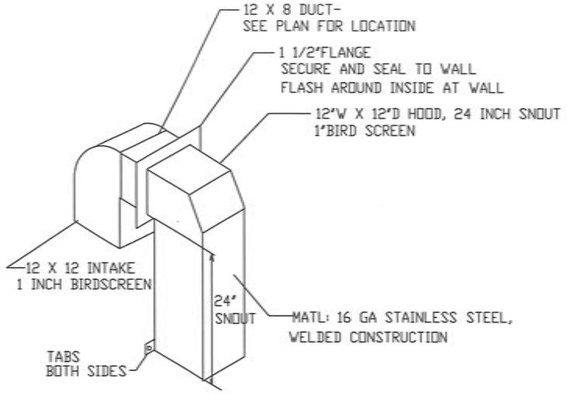

BOILER ROOM RELIEF HOOD BRRH-1

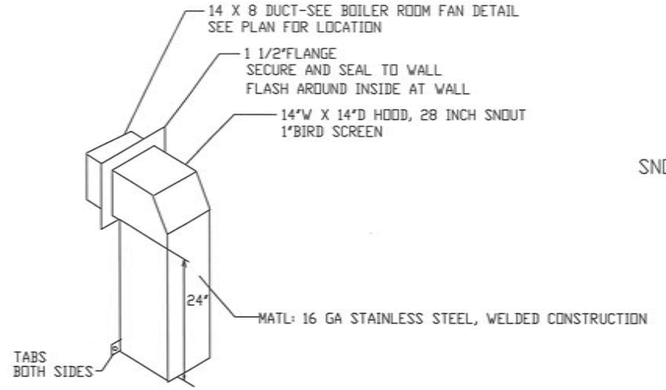

BOILER ROOM INTAKE HOOD BRIH-1

BOILER ROOM HOODS

NO SCALE

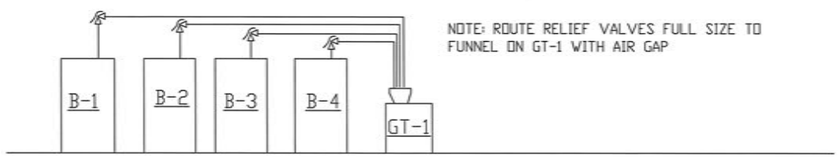

BOILER RELIEF VALVE PIPING

NO SCALE

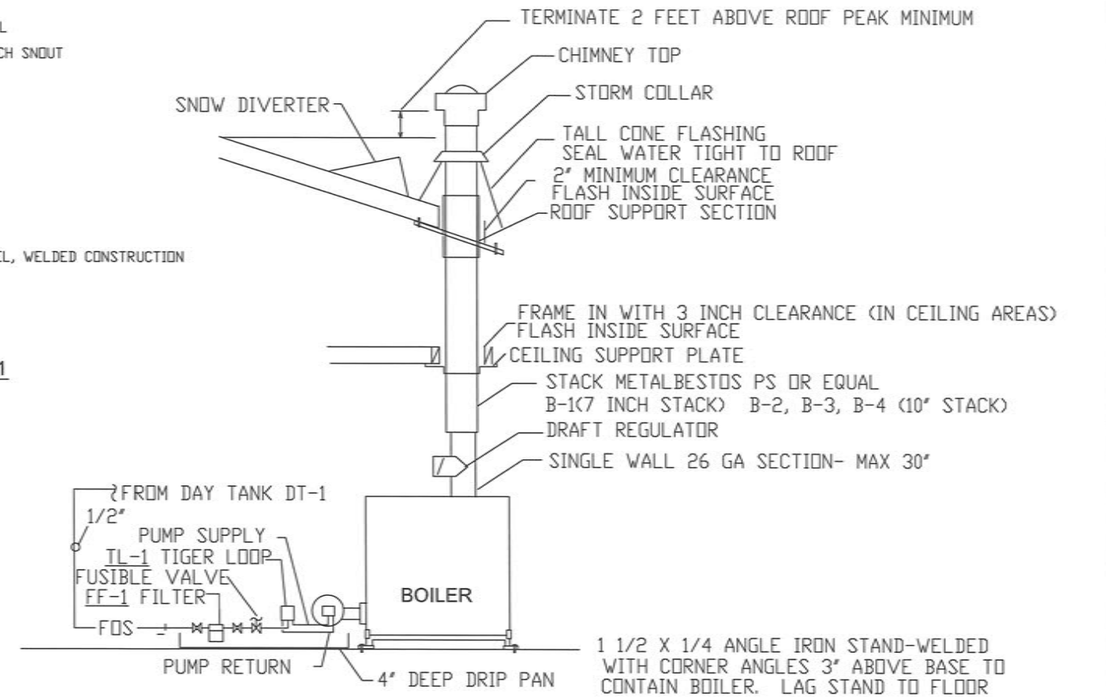

BOILER FUEL OIL & STACK DETAIL (4 TYP)

NO SCALE

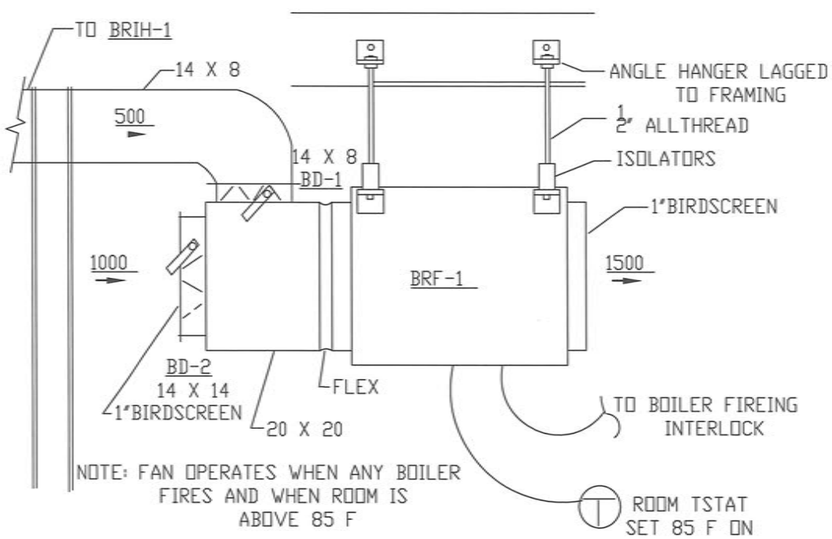

BOILER ROOM FAN BRF-1

NO SCALE

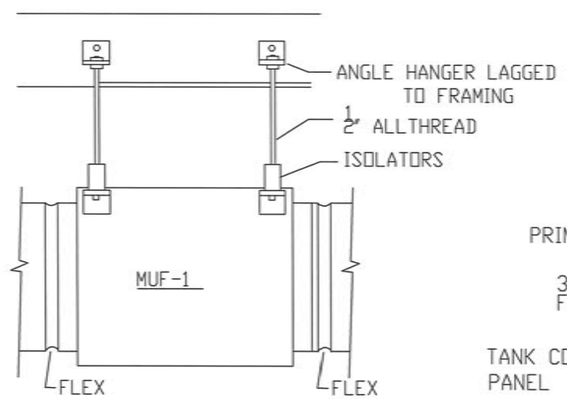

MUF-1 MOUNTING DETAIL

NO SCALE

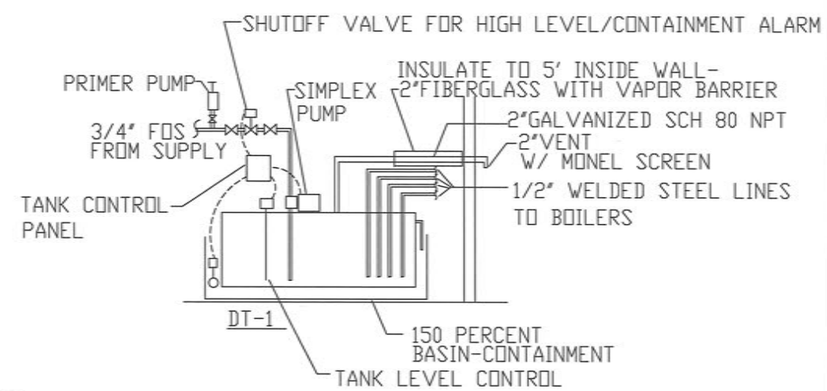

DAY TANK PIPING DIAGRAM

NO SCALE

CAPSTONE ENGINEERING LLC
MECHANICAL ENGINEERS
12110 BUSINESS BLVD. STE 6 - PMB 169
EAGLE RIVER, ALASKA 99577
TELEPHONE & FAX 541-604-0865

STATE OF ALASKA
FREDERICK H BELZ
NO 6698
REGISTERED PROFESSIONAL ENGINEER

APRIL 15, 2014

MECHANICAL DETAILS
CHEFORNAK WASHETERIA
CHEFORNAK, ALASKA

DATE: APRIL 15, 2014
DRAWN: F.H. BELZ
CHKD:
SCALE: AS NOTED
REVISED:
JOB NO. C389

SHEET NO. M-3.6
17 OF 19

G:\ACAD\CHEFORNAK\2013 Washeteria and Water Tank\From Others\Fred Belz\C389 CHEFORNAK M-3.6 BOILER DETAILS.dwg, 5/30/2014 11:48:08 AM, cmerz, Adobe PDF

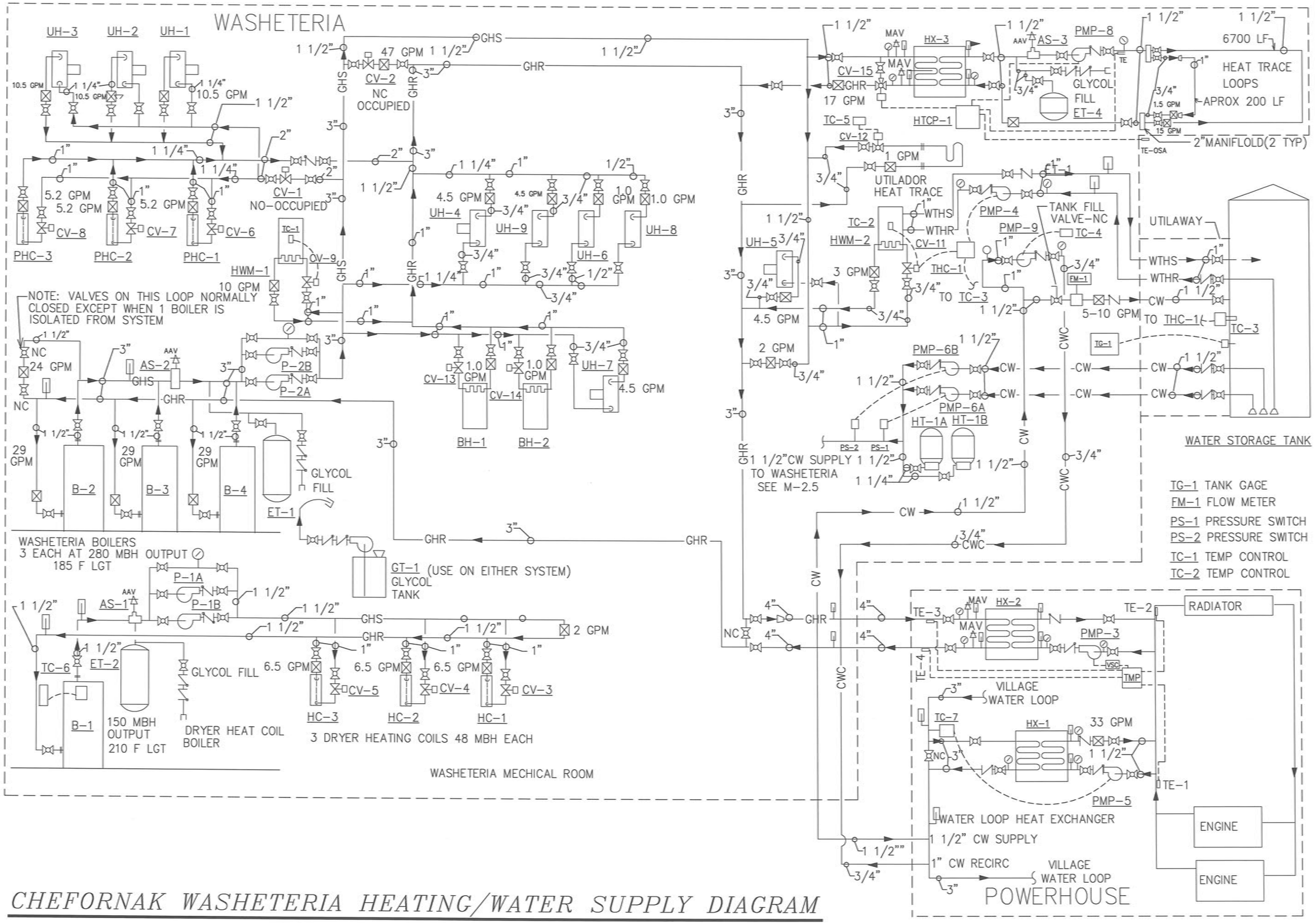

CHEFORNAK WASHETERIA HEATING/WATER SUPPLY DIAGRAM

CAPSTONE ENGINEERING LLC
MECHANICAL ENGINEERS
12110 BUSINESS BLVD STE 6 PMB 169
EAGLE RIVER, ALASKA 99577
TELEPHONE & FAX 541-884-8065

STATE OF ALASKA
FREDERICK H BELZ
ME 6698
REGISTERED PROFESSIONAL ENGINEER

APRIL 15, 2014

HEATING AND WATER SUPPLY DIAGRAM
CHEFORNAK WASHETERIA
CHEFORNAK, ALASKA

DATE: APRIL 15, 2014
DRAWN: F.H. BELZ
CHKD:
SCALE: AS NOTED
REVISED:
JOB NO. C389

SHEET NO. M-4.0
18 OF 19

G:\ACAD\CHEFORNAK\2013 Washeteria and Water Tank\From Others\Fred Belz\C389 CHEFORNAK M-4.0 PIPING-HEATING DIAGRAM.dwg, 5/30/2014 11:44:29 AM, cmerz, \\Ce2main\LANIER MP C2050/LD520C PCL 6

NOTES:

1. PLACE HEAT EXCHANGERS HX-1 AND HX-2 IN N.E. CORNER OF POWER PLANT.
2. USE EXISTING WATER LOOP PENETRATION, PIPE AND VALVES AS SHOWN ON DEMO PLAN.
3. FIELD LOCATE HYDRONIC LINE AND WATER DUCT PENETRATIONS FOR BEST FIT.
4. PIPING ISOMETRICS ARE SCHEMATIC ONLY. FIELD ROUTE ALL PIPING FOR BEST COMPACT FIT AND TO PROVIDE ADEQUATE CLEARANCES FOR PERSONNEL AND EQUIPMENT MAINTENANCE.
5. PIPING SHALL BE TYPE L HARD COPPER TUBING WITH VIEGA PROPRESS FITTINGS UNLESS OTHERWISE NOTED.
6. PIPE SUPPORT:
   USE UNISTRUT P1000T-HG FRAMING CHANNEL LAGGED TO WALL STUDS ON FLOOR. USE P2072SQ POST BASE, FASTEN TYPE L COPPER TUBE TO CHANNEL WITH 'UNICUSHION' MATERIAL AND PIPE CLAMP
7. FIBERGLASS INSULATION FOR PIPING, 1" THICK, AP-T JACKET, 'ZESTON' FITTING COVERS.
8. INSULATION FOR HEAT EXCHANGERS SHALL BE 'ARMAFLEX' SHEET INSULATION 1" THICK USE #520 BLACK ADHESIVE, BUTT JOINTS AND SEAMS ONLY.

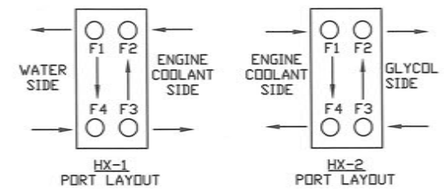

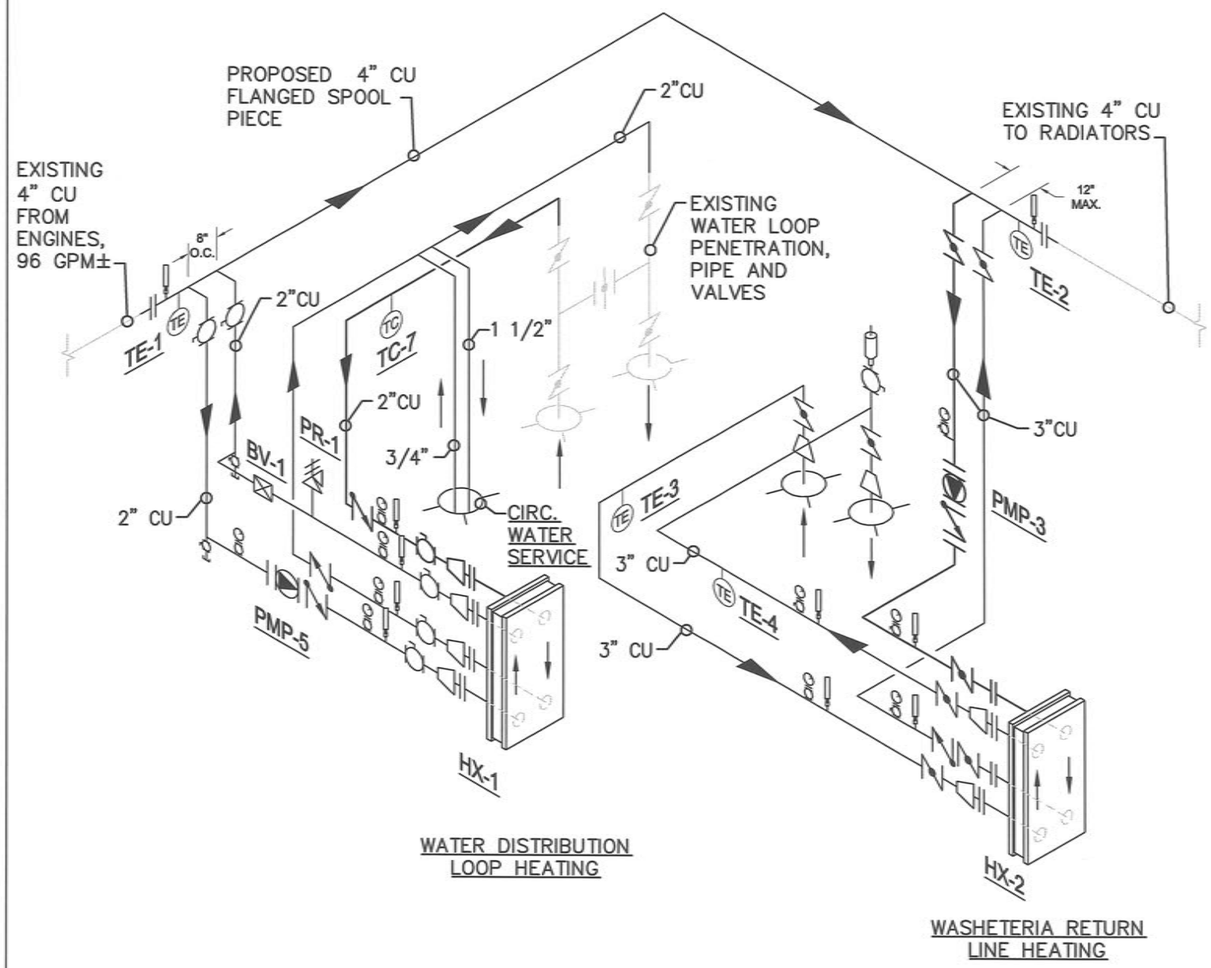

CHEFORNAK POWER PLANT HEAT RECOVERY PIPING ISOMETRIC

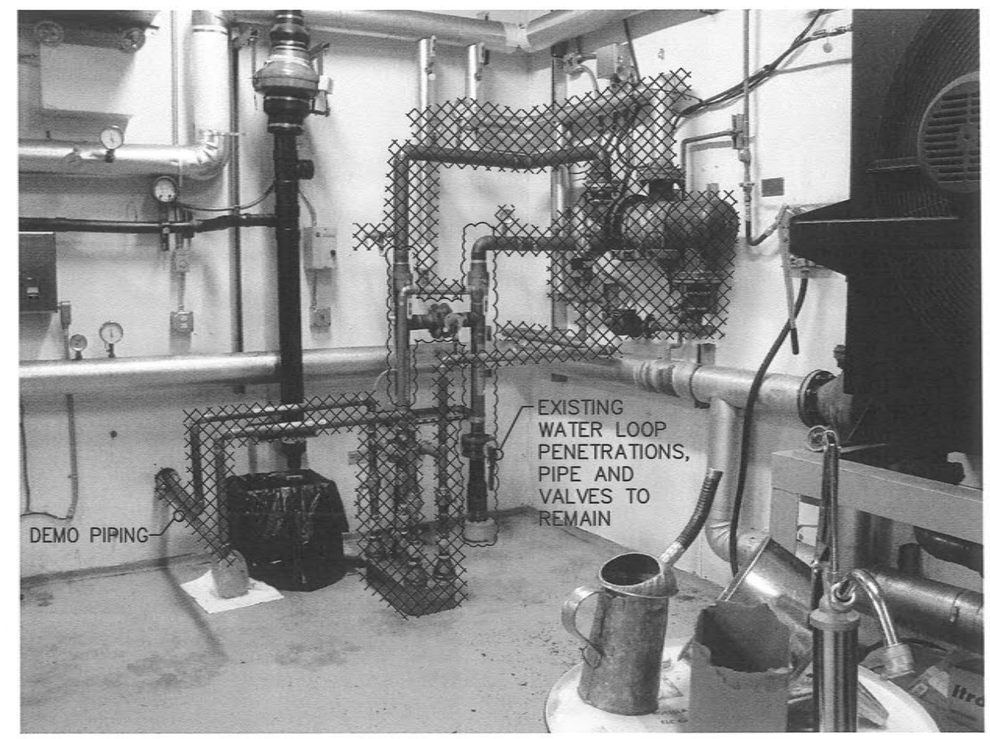

CHEFORNAK POWER PLANT PIPING DEMO PLAN

CAPSTONE ENGINEERING LLC
MECHANICAL ENGINEERS
12110 BUSINESS BLVD. STE 6, PMB 169
EAGLE RIVER, ALASKA 99577
TELEPHONE & FAX 541-884-8065

STATE OF ALASKA
FREDERICK H BELZ
HE 6698
REGISTERED PROFESSIONAL ENGINEER

APRIL 15, 2014

POWER PLANT HEAT RECOVERY PIPING
CHEFORNAK WASHETERIA
CHEFORNAK, ALASKA

DATE: APRIL 15, 2014
DRAWN: F.H. BELZ
CHKD:
SCALE: AS NOTED
REVISED:
JOB NO. C389

SHEET NO. M-4.1
19 OF 19

G:\ACAD\CHEFORNAK\2013 Washeteria and Water Tank\From Others\Fred Beltz\C389 CHEFORNAK M-4.1 POWER PLANT HEAT RECOVERY ISOMETRIC.dwg, 5/30/2014 1:27:34 PM, cmerz, LANIER MP C2050_LD520C PCL 6 (temporary).pc3

ELECTRICAL LEGEND

(NOTE: THIS IS A STANDARD LEGEND AND NOT ALL SYMBOLS ARE NECESSARILY USED.)

- EXTERIOR LIGHT FIXTURE, POLE MOUNTED, HEADS AS SHOWN
- HAND HOLE
- ELECTRIC VAULT
- PHOTOCELL CONTROL
- LUMINAIRE – TYPE AS NOTED ON PLAN
- LUMINAIRE – WALL MOUNTED: TYPE AS NOTED ON PLAN
- LUMINAIRE – EMERGENCY LIGHT
- TRACK LIGHTING – TRACK LENGTH AS SCALED: TYPE AS NOTED ON PLAN
- EMERGENCY LIGHTING UNIT (WALL; CEILING; REMOTE HEAD): TYPE "E", UON
- EMERGENCY BATTERY TO POWER REMOTE HEAD(S); TYPE "ERB", UON
- EXIT SIGN (CEILING; WALL); SHADE DENOTES FACE; ARROWS AS INDICATED; TYPE "X", UON
- SWITCH – SINGLE POLE, SINGLE THROW, UON
- SWITCH – THREE WAY
- SWITCH – FOUR WAY
- SWITCH CONTROL FOR FIXTURES DENOTED WITH "a" APPENDED TO CIRCUIT NUMBER
- SWITCH – LOW VOLTAGE
- SWITCH – ELECTRONIC DIMMER SWITCH COMPATIBLE WITH LIGHT FIXTURE
- SWITCH – KEYED
- SWITCH – PILOT LIGHT
- SWITCH – INTEGRAL MOTOR OVERLOAD
- SWITCH – VARIABLE SPEED CONTROL
- LIGHT CONTROL OCCUPANCY SENSOR – WALL SWITCH BOX MOUNTED
- LIGHT CONTROL OCCUPANCY SENSOR – CEILING MOUNTED
- POWER DISTRIBUTION PANELBOARD
- METERING DEVICE
- CURRENT TRANSFORMER ENCLOSURE
- POWER PANELBOARD ([NEW – SURFACE; RECESSED], [EXISTING – SURFACE; RECESSED])
- TRANSFORMER: APPROX. PHYSICAL SIZE AS SCALED; ACTUAL RATING AS NOTED ON ONE-LINE DIAGRAMS
- MOTOR CONNECTION
- COMBINATION BATHROOM FAN/LIGHT: TYPE AS NOTED ON PLAN
- NON-FUSED SAFETY SWITCH
- FUSED SAFETY SWITCH
- ENCLOSED CIRCUIT BREAKER SWITCH
- MOTOR STARTER
- COMBINATION MOTOR STARTER SAFETY SWITCH
- PUSH BUTTON CONTROL STATION
- JUNCTION BOX OR EQUIPMENT CONNECTION – FLEX OR RECEPTACLE AS REQUIRED (CEILING; WALL; FLOOR)
- POWER CONNECTION TO FSD CONTROLLED BY FIRE ALARM SYSTEM
- SIMPLEX RECEPTACLE
- DUPLEX RECEPTACLE
- DOUBLE DUPLEX RECEPTACLE
- DUPLEX RECEPTACLE – SPLIT WIRED FOR SWITCH CONTROL OF LOWER OUTLET
- DUPLEX RECEPTACLE – GFCI PROTECTED
- DUPLEX RECEPTACLE – GFCI PROTECTED MOUNTED +48" AFF
- DUPLEX RECEPTACLE – GFCI PROTECTED MOUNTED ABOVE COUNTERTOP
- DUPLEX RECEPTACLE – MOUNTED ABOVE COUNTERTOP
- DUPLEX RECEPTACLE – FLOOR MOUNTED FIRE RATED POKE THROUGH, UON
- DOUBLE DUPLEX RECEPTACLE – FLOOR MOUNTED FIRE RATED POKE THROUGH, UON
- RECEPTACLE – PENDANT MOUNTED FROM CEILING
- RECEPTACLE – FLUSH MOUNTED IN CEILING
- DRYER RECEPTACLE – 30A, 3 POLE, 4 WIRE NEMA 14-30R
- ELECTRIC RANGE RECEPTACLE – 50A, 3 POLE, 4 WIRE, NEMA 14-50R
- SPECIAL PURPOSE RECEPTACLE – NEMA CONFIGURATION AS NOTED (SURFACE; WALL)
- GROUND CONNECTION POINT
- DUAL CHANNEL SURFACE MOUNTED RACEWAY – LENGTH AS SCALED
- SINGLE CHANNEL SURFACE MOUNTED RACEWAY – LENGTH AS SCALED
- TELECOMMUNICATION OUTLET (WALL; FLOOR)
- TELEPHONE OUTLET
- TELEVISION OUTLET (WALL; CEILING)
- DUAL CHANNEL SERVICE POLE
- TELECOMMUNICATION FLOOR STANDING RACK
- TELECOMMUNICATION WALL MOUNTED RACK
- TMGB TELECOMMUNICATION MAIN GROUNDING BUS
- TGB TELECOMMUNICATION GROUNDING BUS
- CONTROL PANEL – TYPE AS NOTED (SURFACE; RECESSED)
- FIRE ALARM CONTROLLED MAGNETIC DOOR HOLDER / RELEASE
- ABORT STATION
- CARBON MONOXIDE DETECTOR
- HEAT DETECTOR – RATE OF RISE
- HEAT DETECTOR – FIXED TEMPERATURE AS NOTED
- SMOKE DETECTOR – PHOTOELECTRIC TYPE
- SMOKE DETECTOR – MULTI-SENSOR TECHNOLOGY TYPE
- SMOKE DETECTOR – DUCT MOUNTED
- SMOKE DETECTOR – BEAM RECEIVER
- SMOKE DETECTOR – BEAM TRANSMITTER
- FLAME DETECTOR
- LINE TYPE HEAT SENSITIVE CABLE DETECTOR
- FIRE ALARM HORN
- FIRE ALARM STROBE
- FIRE ALARM COMBINATION HORN/STROBE
- FIRE ALARM PULL STATION
- FCP FIRE ALARM CONTROL PANEL
- FSA FIRE SYSTEM ANNUNCIATOR PANEL
- HCP HALON CONTROL PANEL
- FIRE ALARM SPEAKER STROBE
- WATER FLOW BELL – 120V CONTROLLED BY FLOW SWITCH
- FIRE ALARM FLOW SWITCH
- FIRE ALARM TAMPER SWITCH
- MICROPHONE INPUT JACK
- MICROPHONE INPUT JACK – FLOOR MOUNTED
- INTERCOM CALL BUTTON
- INTERCOM ADMINISTRATION PHONE
- SPEAKER (WALL; CEILING)
- CLOCK SPEAKER COMBINATION WALL MOUNT UNIT
- CLOCK – WALL MOUNTED
- CR SECURITY ACCESS CARD READER
- DS DOOR CONTROL SOLENOID
- DM DOOR MAGNETIC CONTACT
- GB SECURITY SYSTEM – GLASS BREAK SENSOR
- SECURITY SYSTEM – MOTION SENSOR
- PS SECURITY SYSTEM – DOOR POSITION SENSOR
- MD SECURITY SYSTEM – REQUEST TO EXIT MOTION DETECTOR
- KP SECURITY SYSTEM – ACCESS KEY PAD
- SECURITY SYSTEM – MOTION SENSOR – NARROW PATTERN
- SC SECURITY SYSTEM – CAMERA
- ACCESS PANEL
- LINETYPE DENOTING CABLE TRAY
- LINETYPE/LINEWEIGHT DENOTING FUTURE WORK
- LINETYPE/LINEWEIGHT DENOTING EXISTING WORK TO REMAIN
- LINETYPE/LINEWEIGHT DENOTING NEW WORK
- LINETYPE/LINEWEIGHT DENOTING DEMO WORK
- (X) DENOTES AVAILABLE FAULT CURRENT

EQUIPMENT TAG LEGEND

LUMINAIRES (A3[6] / 2H-15a)
- LUMINAIRE TYPE (UNDERLINED)
- THE NUMBER IN BRACKETS INDICATES HOW MANY TYPICAL LUMINAIRES OF THIS TYPE ARE IN THIS AREA
- CIRCUIT AND SWITCHLEG
- PANEL
- TYPICAL LUMINAIRE

CONTROL SWITCHES ($6 a)
- LOWER CASE LETTER DENOTES SWITCH LEG FOR CORRESPONDING LUMINAIRE CONTROL
- UPPERCASE LETTER OR NUMBER DENOTES SWITCH CONFIGURATION

EQUIPMENT CONNECTIONS (AHU-1 / A-1,3,5)
- EQUIPMENT ID (UNDERLINED) REFER TO EQUIPMENT CONNECTION SCHEDULE FOR REQUIREMENTS
- TYPICAL EQUIPMENT (MOTOR STARTER SHOWN)
- CIRCUIT NUMBER(S)
- PANEL

RECEPTACLES (+48" / 2L-1,3 / L5-20R)
- MOUNTING HEIGHT AFF
- PANEL
- CIRCUIT NUMBER(S)
- NEMA CONFIGURATION FOR SPECIAL RECEPTACLES (UNDERLINED)

ABBREVIATIONS

(E)	EXISTING
A	AMPERES
AC	ABOVE COUNTER
AFF	ABOVE FINISHED FLOOR
AFCI	ARC FAULT CIRCUIT INTERRUPTER
AFG	ABOVE FINISHED GRADE
AHJ	AUTHORITY HAVING JURISDICTION
AIC	AMPS INTERRUPTING CAPACITY
C	CONDUIT OR CELCIUS
CAT	CATEGORY
CB	CIRCUIT BREAKER
CO	CONDUIT ONLY
CT	CURRENT TRANSFORMER
(D)	DEMOLISH
DISC	DISCONNECT
EGC	EQUIPMENT GROUNDING CONDUCTOR
F	FAHRENHEIT
FAA	FIRE ALARM ANNUNCIATOR
FACP	FIRE ALARM CONTROL PANEL
FHP	FRACTIONAL HORSEPOWER
FLA	FULL LOAD AMPS
FSD	FIRE SMOKE DAMPER
FT	FEET
FU	FUSE
G	GROUND FAULT CIRCUIT INTERRUPTER
GEC	GROUNDING ELECTRODE CONDUCTOR
HP	HORSEPOWER
ID	IDENTIFICATION
IN	INCHES
KVA	KILOVOLT-AMPERE
KW	KILOWATT
LRA	LOCKED ROTOR AMPS
LTG	LIGHTING
MCA	MINIMUM CIRCUIT AMPACITY
MDP	MAIN DISTRIBUTION PANEL
MDS	MAIN DISTRIBUTION SWITCHBOARD
MFS	MAXIMUM FUSE SIZE
(N)	NEW
NC	NORMALLY CLOSED
NO	NORMALLY OPEN
P	POLES
PC	PHOTO CELL
PH, ø	PHASE
PNL	PANEL
PRI	PRIMARY
REC	RECEPTACLE
(R)	RELOCATED
RIB	RELAY IN A BOX (MOTOR RATED)
SCCR	SHORT CIRCUIT CURRENT RATING
SE	SERVICE ENTRANCE RATED
SEC	SECONDARY
SSEBJ	SUPPLY SIDE EQUIPMENT BONDING JUMPER
SVC	SERVICE
TELECOM	TELECOMMUNICATION
TGB	TELECOMMUNICATION GROUNDING BUSBAR
TMGB	TELECOMMUNICATION MAIN GROUNDING BUSBAR
TYP	TYPICAL
UON	UNLESS OTHERWISE NOTED
V	VOLTS
VA	VOLT-AMPERES
VFD	VARIABLE FREQUENCY DRIVE
W	WATTS OR WIRE
WG	WIRE GUARD
WP	WEATHERPROOF (NEMA 4 RATED)
XFMR	TRANSFORMER

MOUNTING HEIGHT SCHEDULE

PANELBOARDS (TOP)	+70"
SPECIAL SYSTEM PANELS (TOP)	+66"
POWER METER BASE (CENTER LINE OF SOCKET)	+66"
CONTACTORS, MOTOR STARTERS, DISCONNECT SWITCHES (TOP)	+66"
RECEPTACLES IN OFFICE AREAS	+18"
RECEPTACLES IN NON-FINISHED AND MECHANICAL SPACES	+46"
ABOVE COUNTER DEVICES (DENOTED "AC" OR BY SYMBOL)	SEE NOTES
WALL MOUNTED SWITCHES	+46"
TELECOMMUNICATION OUTLETS	+18"
WALL MOUNTED TELEPHONE OUTLET (DENOTED "W")	+54"
CLOCK OUTLETS	+80" TO BOTTOM
HORNS/STROBES/HORN STROBES/DOORBELL RINGER	+80" TO BOTTOM
PULL STATIONS, PUSH BUTTONS, DOORBELL PUSHBUTTON	+46"

NOTES:
1) COORDINATE AND INSTALL ALL EQUIPMENT AND DEVICES WITH THE ARCHITECTURAL PLANS AND ANY SPECIFICALLY DENOTED REQUIREMENTS.
2) MOUNTED HEIGHTS SHALL PREVAIL UNLESS OTHERWISE NOTED OR FIELD CONDITIONS REQUIRE DEVIATION.
3) MOUNTING HEIGHTS ARE FROM FINISHED FLOOR TO THE CENTERLINE OF THE DEVICE UNLESS OTHERWISE NOTED.
4) COORDINATE MOUNTING HEIGHTS AND LOCATIONS OF OUTLETS DENOTED AS ABOVE COUNTER TO BE INSTALLED 6" ABOVE COUNTERS OR BACKSPLASHES, WHICHEVER IS HIGHER.

GENERAL REQUIREMENTS

1. ALL ELECTRICAL WORK SHALL BE INSTALLED IN ACCORDANCE WITH ALL REQUIREMENTS OF THE 2011 EDITION OF THE NATIONAL ELECTRIC CODE, STATE, MUNICIPAL, AND FEDERAL LAWS, AMENDMENTS AND/OR ORDINANCES GOVERNING THE PROJECT. IF IN ANY INSTANCE THE PLANS AND SPECIFICATIONS ARE IN DIRECT CONFLICT WITH SUCH CODES, LAWS, AND/OR ORDINANCES, THE CODE, LAWS, AND/OR ORDINANCES SHALL HAVE JURISDICTION AND THE WORK IN QUESTION SHALL BE INSTALLED ACCORDING TO THE CODES, LAWS, AND/OR ORDINANCES. ALL WORK SHALL BE PERFORMED UNDER THE SUPERVISION OF A CERTIFIED ELECTRICIAN.
2. THE CONTRACTOR SHALL OBTAIN ALL REQUIRED CONSTRUCTION PERMITS AND PAY ALL ASSOCIATED FEES.
3. MATERIALS AND EQUIPMENT SHALL BE COMMERCIAL GRADE AND ACCEPTABLE TO THE AUTHORITY HAVING JURISDICTION AS SUITABLE FOR THE USE INTENDED. ALL ELECTRICAL EQUIPMENT SHALL INCLUDE THE SEAL OF A NATIONALLY RECOGNIZED TESTING LABORATORY FOR THE PURPOSE FOR WHICH IT IS INSTALLED. WHENEVER POSSIBLE, SIMILAR ITEMS SHALL BE SUPPLIED BY THE SAME MANUFACTURER THROUGHOUT THE PROJECT.
4. COORDINATE AND PROVIDE THE EQUIPMENT WITH THE SHORT CIRCUIT CURRENT RATING (SCCR) FOR THE AVAILABLE FAULT CURRENT AT THE POINT OF THE SYSTEM WHERE INSTALLED. SERIES RATING OF EQUIPMENT IS ACCEPTABLE. PROVIDE ARC FAULT WARNING LABELS ON ALL PANELBOARDS, MCC UNITS AND SIMILAR EQUIPMENT PER NEC REQUIREMENTS.
5. THE FOLLOWING WIRING METHODS SHALL BE ACCEPTABLE FOR INSTALLATION OF ELECTRICAL CIRCUITS: TYPE MC CABLE, INTERMEDIATE METAL CONDUIT, RIGID METAL CONDUIT, RIGID NONMETALLIC CONDUIT (FOR UNDERGROUND USE ONLY), ELECTRICAL METALLIC TUBING, FLEXIBLE METALLIC TUBING, FLEXIBLE METAL CONDUIT, AND LIQUID TIGHT FLEXIBLE CONDUIT. ALL WIRING METHODS SHALL INCLUDE AN EQUIPMENT GROUNDING CONDUCTOR TO BE INSTALLED THEREIN AND SIZED FOR THE CIRCUITS SERVED. ALL CLASSIFIED AREAS SHALL USE RIGID CONDUIT, AND WIRING METHODS AND MATERIALS RATED FOR EXPLOSION PROOF PER NEC AND THE CLASSIFICATIONS NOTED ON THE PLANS.
6. ALL CONDUCTORS SHALL BE COPPER. ALL CONDUCTORS IN UNHEATED SPACES OF THE BUILDING OR LOCATED OUTSIDE OF THE BUILDING ARE REQUIRED TO HAVE TYPE XHHW 90 DEGREE C INSULATION. ALL CONDUCTORS LOCATED IN HEATED SPACES CAN BE XHHW OR THHN 90 DEGREE C INSULATION UNLESS NOTED OTHERWISE. CONDUCTOR AMPACITY SHALL BE BASED ON TABLE 310-16 OF THE NEC. USE 60-DEGREE C. RATING FOR CIRCUITS TERMINATING ON DEVICES RATED BELOW 100A. USE 75-DEGREE C RATING FOR CIRCUITS TERMINATING ON DEVICES AND IN ENCLOSURES RATED 100A AND OVER. DERATE CONDUCTORS PER NEC REQUIREMENTS.
7. CONCEAL ALL ELECTRICAL RACEWAYS, BOXES, CABLING, CONDUCTORS AND THE LIKE IN WALLS, BELOW FLOORS, SLABS OR ABOVE FINISHED CEILING SPACES. ELECTRICAL EQUIPMENT AND WIRING CAN BE EXPOSED IN MECHANICAL ROOMS, TELECOMMUNICATION ROOMS OR WHERE SPECIFICALLY NOTED.
8. DO NOT ROUTE RACEWAYS ON THE EXTERIOR SURFACE OF THE BUILDING, ROOF, OR FLOOR UNLESS SPECIFICALLY NOTED OTHERWISE.
9. PROVIDE ALL WIRING AND EQUIPMENT IN WET AND EXTERIOR LOCATIONS USING EQUIPMENT AND WIRING METHODS RATED FOR WET ENVIRONMENTS.
10. PROVIDE ACCESS PANELS FOR ALL LOCATION NECESSARY TO ACCESS ELECTRICAL EQUIPMENT AND JUNCTION BOXES. ACCESS PANELS SHALL BE FIRE RATED EQUAL TO OR EXCEEDING THE ADJACENT WALL OR CEILING CONSTRUCTION AND PAINTED TO MATCH.
11. CONNECT ALL EMERGENCY LIGHTING UNITS AND MODULES TO THE LOCAL AREA LIGHTING CIRCUITS AHEAD OF ANY SWITCHES OR RELAYS. LOCATE REMOTE TEST SWITCHES AND INDICATOR LIGHTS AS NECESSARY FOR TEST SWITCHES ON EMERGENCY MODULES.
12. SEAL ALL PENETRATIONS. SEAL PENETRATIONS AT ALL FIRE WALLS WITH APPROVED FIRE STOPPING COMPOUND.
13. OUTLET BOXES LOCATED BACK TO BACK IN FIRE RATED WALLS SHALL BE SPACED A MINIMUM OF 2 FEET HORIZONTALLY OR PROVIDE AN APPROVED FIRE PROTECTIVE MATERIAL PLACED ON OR AROUND THEM LISTED FOR THE FIRE RATING OF THE WALL.
14. CONTRACTOR SHALL SUBMIT REQUEST FOR SUBSTITUTION IN WRITING TO THE ENGINEER.
15. PROVIDE SEISMIC SUPPORT AND DESIGN PER IBC REQUIREMENTS.
16. THE ELECTRICAL CONTRACTOR SHALL CONTACT SERVING UTILITY CO. AND VERIFY EXACT SERVICE REQUIREMENTS FOR POWER. THE CONTRACTOR SHALL COORDINATE AND PROVIDE ALL REQUIREMENTS OF SERVING UTILITY AND ALL EQUIPMENT SHALL CONFORM TO THE SERVING UTILITY STANDARDS AND REQUIREMENTS.

EIC ENGINEERS, INC
ELECTRICAL ENGINEERS
6927 OLD SEWARD HWY, SUITE 200
ANCHORAGE, AK 99518
T 907.349.9712
F 907.349.9713
www.eiceng.com
EIC JOB #E13-1941

RECORD DRAWING CERTIFICATE
THESE DRAWINGS REFLECT RECORDED INFORMATION OBTAINED DURING CONSTRUCTION. INFORMATION PROVIDED HEREIN IS ACCURATE TO THE BEST OF MY KNOWLEDGE.
NAME DATE

SCALE:
BAR IS ONE INCH ON ORIGINAL DRAWING 0 1"
IF NOT ONE INCH ON THIS SHEET, ADJUST SCALES ACCORDINGLY

CONSTRUCTION RECORD
FIELD BOOK
STAKING
FOREMAN
AS-BUILT
INSPECTOR

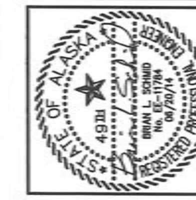

WASHETERIA AND WATER TANK
ELECTRICAL LEGEND AND GENERAL REQUIREMENTS
CHEFORNAK, ALASKA

CE2 ENGINEERS, INC.
PO BOX 232946 ANCHORAGE, AK 99523 PH: 907-349-1010 FAX: 907-349-1015

REVISION	BY	DATE

Project No.
Date JUNE 2014
Designed BLS
Drawn BLS
Approved EDC

Sheet No.
E1.1

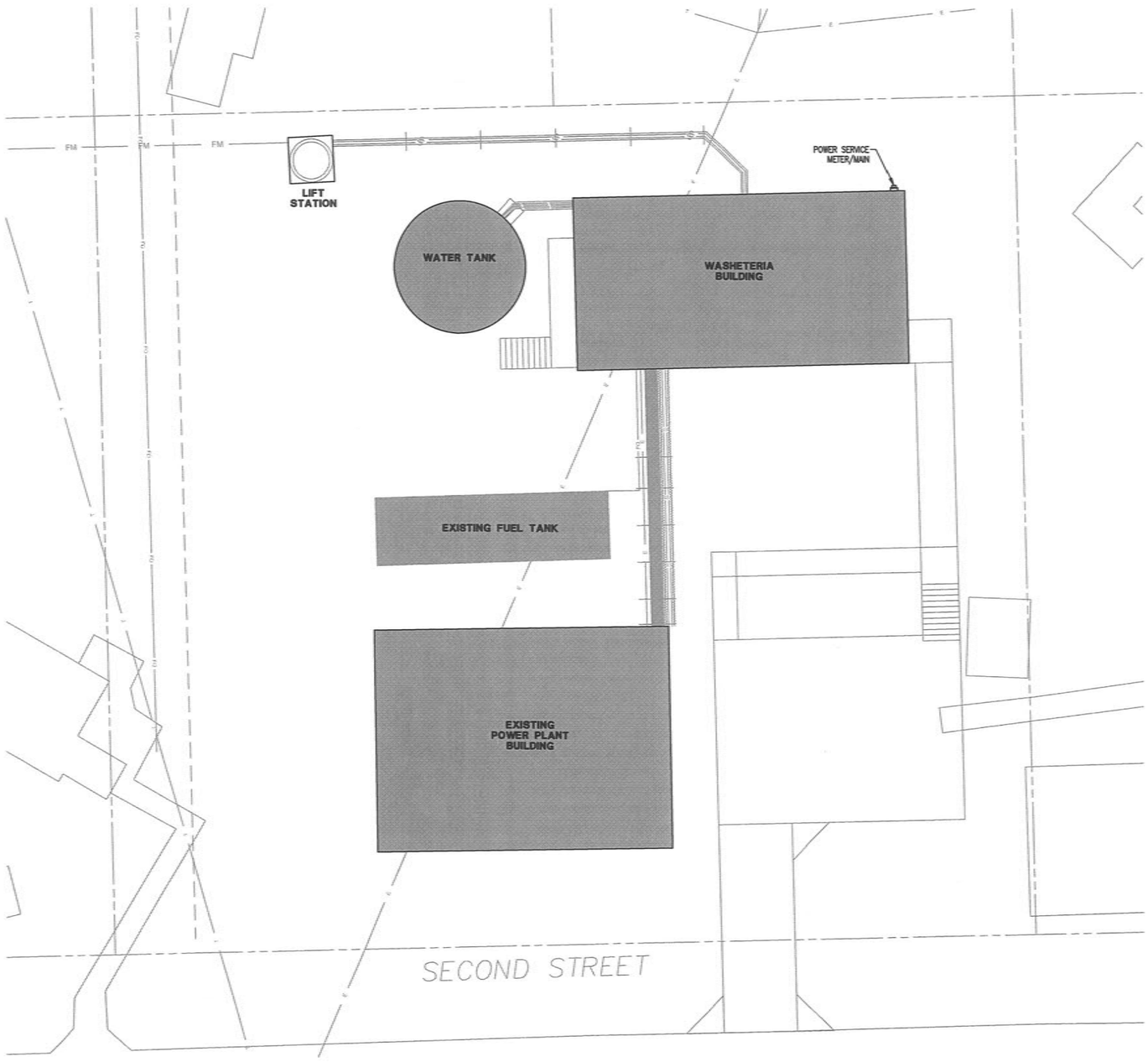

1 E2.1 **ELECTRICAL SITE PLAN**
SCALE: 1" = 10'-0"

PLAN N

EIC ENGINEERS, INC
ELECTRICAL ENGINEERS

6927 OLD SEWARD HWY, SUITE 200
ANCHORAGE, AK 99518
T 907.349.9712
F 907.349.9713
www.eiceng.com

EIC JOB #E13-1941

RECORD DRAWING CERTIFICATE

THESE DRAWINGS REFLECT RECORDED INFORMATION OBTAINED DURING CONSTRUCTION. INFORMATION PROVIDED HEREIN IS ACCURATE TO THE BEST OF MY KNOWLEDGE.

NAME DATE

SCALE:

BAR IS ONE INCH ON ORIGINAL DRAWING
0 1"
IF NOT ONE INCH ON THIS SHEET, ADJUST SCALE ACCORDINGLY

CONSTRUCTION RECORD

FIELD BOOK
STAMPING
FOREMAN
AS-BUILT
INSPECTOR

STATE OF ALASKA 49TH
BRIAN L. SCHMID
No. EE-11764
REGISTERED PROFESSIONAL ENGINEER

WASHETERIA AND WATER TANK
ELECTRICAL SITE PLAN
CHEFORNAK, ALASKA

CE2 ENGINEERS, INC.
PO BOX 232948 ANCHORAGE, AK 99523 PH: 907-349-1016 FAX: 907-349-1015

REVISION	BY	DATE

Project No. ____
Date JUNE 2014
Designed BLS
Drawn BLS
Approved EDC

Sheet No.
E2.1

SHEET NOTES

(1) PROVIDE DUAL TECHNOLOGY WALL MOUNT OCCUPANCY SENSOR.

LUMINAIRE SCHEDULE

TYPE	DESCRIPTION	LAMPS	MOUNTING	MANUFACTURER/MODEL	NOTES
E1	LED EMERGENCY LIGHTING UNIT	LED	WALL +7'-0" AFF	LITHONIA #ELM2-LED	
E2	LED EMERGENCY LIGHTING UNIT W/ CAPACITY TO POWER REMOTE HEAD	LED	WALL +7'-0" AFF	LITHONIA #ELM2-LED-HO	1
ER1	LED EMERGENCY REMOTE HEAD W/ EXTERIOR RATING & TWIN HEADS	LED	WALL +7'-0" AFF	LITHONIA #ELA-T-QWP-L0304	
LBL2	2FT LED WRAP W/ PRISMATIC LENS	LED	CEILING SURFACE	LITHONIA #LBL2-LP835	
LBL4	4FT LED WRAP W/ PRISMATIC LENS	LED	CEILING SURFACE	LITHONIA #LBL4-LP835	
WL2	2FT WALL MOUNT LED WRAP W/ PRISMATIC LENS	LED	WALL ABOVE VANITY	LITHONIA #WL2-12L-D13-LP835	
X	LED EXIT SIGN W/ BATTERY BACKUP	LED	WALL OR CEILING	LITHONIA #LQM-S-W-3-G-120/277-ELN	
ZW1	WALL MOUNTED LED AREA LIGHT W/ CUTOFF OPTICS & INTEGRAL PHOTOCELL	LED	EXTERIOR WALL ABOVE DOOR	LITHONIA #OLW14	

STANDARD NOTES

A) CATALOG NUMBERS ARE FOR GENERAL REFERENCE AND ARE NOT INCLUSIVE OF ALL OPTIONS OR REQUIREMENTS DENOTED ON PLANS AND SPECIFICATIONS.
B) REFER TO ARCHITECTURAL DRAWINGS FOR EXACT LOCATION AND PROVIDE MOUNTING HARDWARE/FLANGES ETC FOR ALL LUMINAIRES FOR CEILING TYPES SHOWN.
C) LUMINAIRES NOTED ON THE FLOOR PLANS AS 'NL' (NIGHTLIGHT) SHALL BE CONNECTED TO UNSWITCHED POWER CIRCUIT NOTED ON DRAWINGS.
D) ALL LED LIGHTING TO BE 3500K.

REFERENCED NOTES

1) UNIT SIZED TO OPERATE EMERGENCY REMOTE HEAD FOR 90 MINUTES.

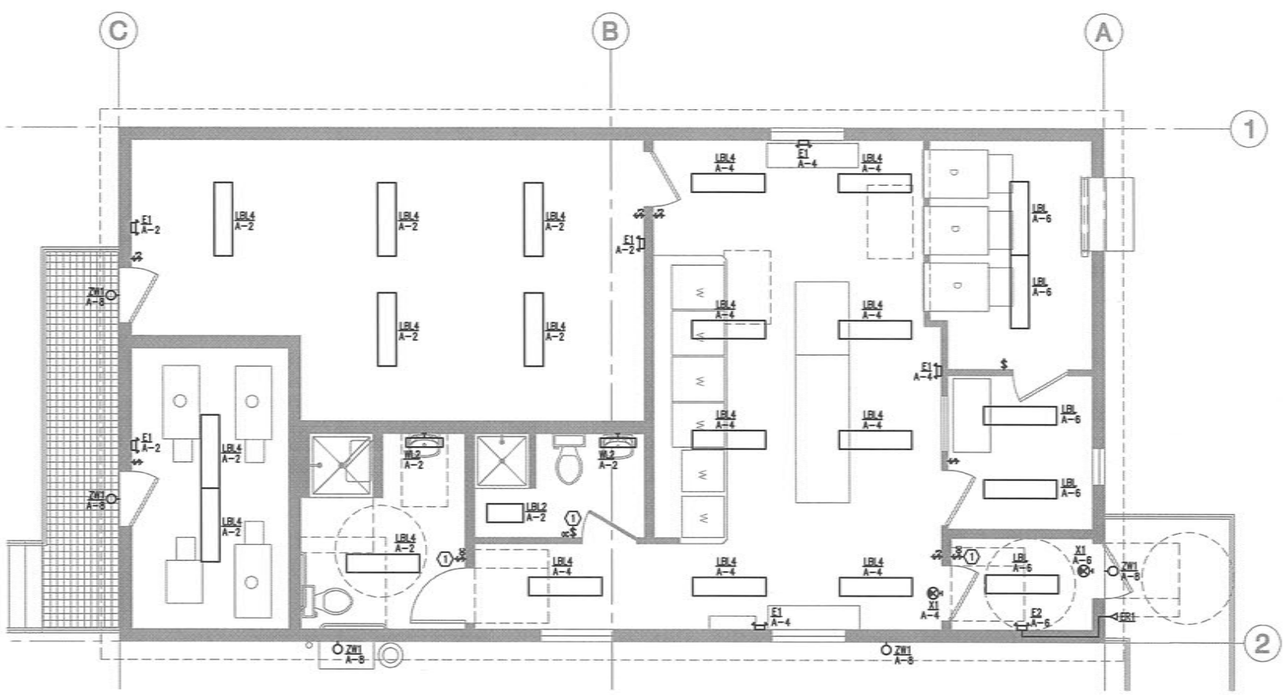

1 E3.1 **WASHETERIA LIGHTING PLAN**
SCALE: 1/4" = 1'-0"

EIC ENGINEERS, INC
ELECTRICAL ENGINEERS
6927 OLD SEWARD HWY, SUITE 200
ANCHORAGE, AK 99518
T 907.349.9712
F 907.349.9713
www.eiceng.com
EIC JOB #E13-1941

RECORD DRAWING CERTIFICATE
THESE DRAWINGS REFLECT RECORDED INFORMATION OBTAINED DURING CONSTRUCTION. INFORMATION PROVIDED HEREIN IS ACCURATE TO THE BEST OF MY KNOWLEDGE.
NAME DATE

SCALE:
BAR IS ONE INCH ON ORIGINAL DRAWING 0 1"
IF NOT ONE INCH ON THIS SHEET, ADJUST SCALE ACCORDINGLY

CONSTRUCTION RECORD
FIELD BOOK
STAKING
FOREMAN
AS-BUILT
INSPECTOR

STATE OF ALASKA 49TH BRIAN L. SCHMID No. EE-11784 REGISTERED PROFESSIONAL ENGINEER

WASHETERIA AND WATER TANK
ELECTRICAL LIGHTING PLAN
CHEFORNAK, ALASKA

CE2 ENGINEERS, INC.
PO BOX 230946 ANCHORAGE, AK 99523 PH: 907-349-1010 FAX: 907-349-1015

REVISION	BY	DATE

Project No. ____ Date JUNE 2014
Designed BLS
Drawn BLS
Approved EDC

Sheet No. E3.1

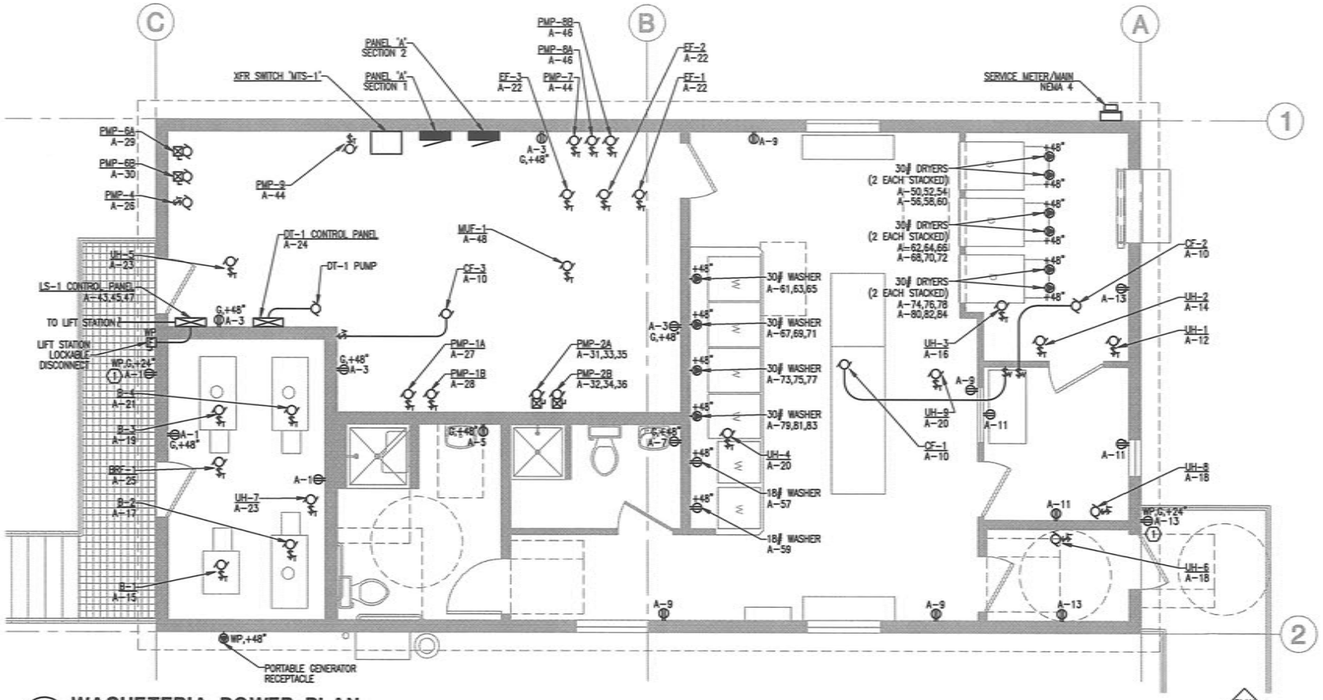

1 WASHETERIA POWER PLAN

E4.1 SCALE: 1/4" = 1'-0"

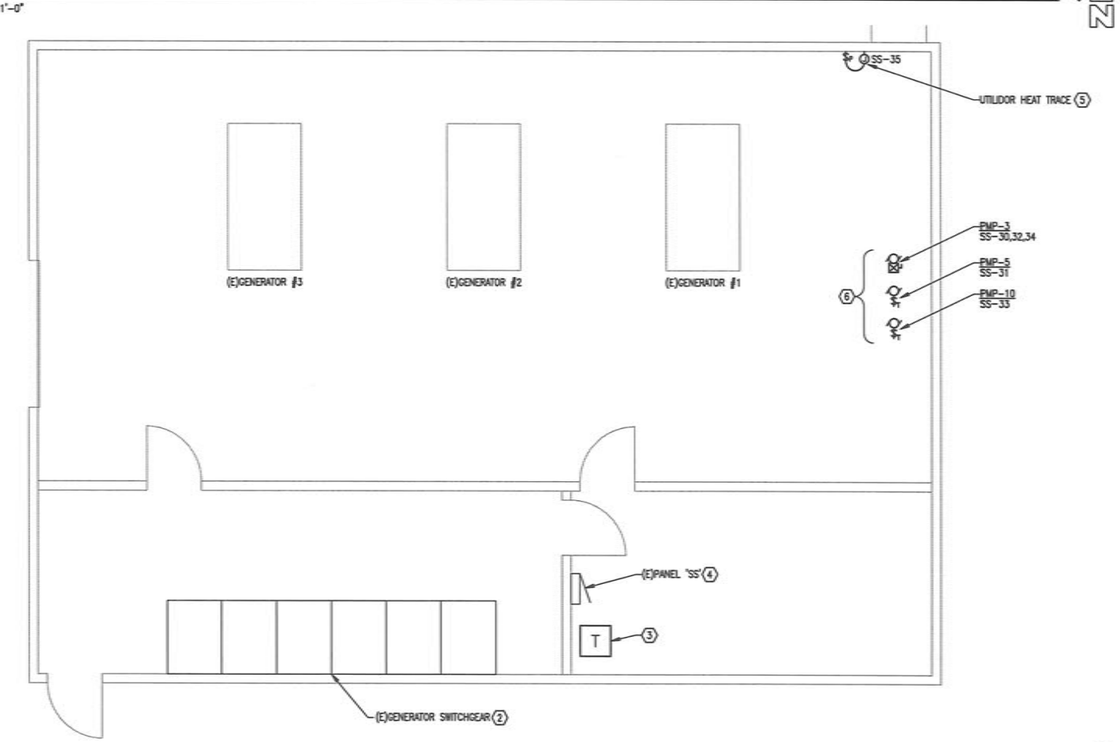

1 POWER PLANT POWER PLAN

E4.1 SCALE: 1/4" = 1'-0"

SHEET NOTES

1. PROVIDE WEATHERPROOF WHILE-IN-USE COVER FOR EXTERIOR RECEPTACLE.
2. REMOVE AND REPLACE PANEL 'SS' /XFMR CIRCUIT BREAKER IN EXISTING GENERATOR SWITCHGEAR. SEE POWER PLANT ONE-LINE DIAGRAMS FOR DETAIL.
3. REMOVE AND REPLACE PANEL 'SS' TRANSFORMER AND FEEDERS. SEE POWER PLANT ONE-LINE DIAGRAMS FOR DETAIL.
4. UTILIZE SPARE/SPACE IN PANEL 'SS' FOR NEW BRANCH CIRCUITS. SEE POWER PLANT ONE-LINE DIAGRAMS FOR DETAIL.
5. PROVIDE POWER CONNECTION TO UTILIDOR HEAT TRACE. CONTROL FROM WALL MOUNT PILOT LIGHT SWITCH. COORDINATE EXACT LOCATION AND REQUIREMENTS WITH MECHANICAL.
6. PROVIDE POWER CONNECTION FOR NEW PUMPS. COORDINATE EXACT LOCATION AND REQUIREMENTS WITH MECHANICAL.
7. CONTRACTOR TO COORDINATE VARIOUS 120V CONTROL TRANSFORMER POWER CONNECTIONS AND LOCATIONS WITH MECHANICAL.

MECHANICAL EQUIPMENT CONNECTION SCHEDULE

UNIT ID	LOCATION OR FUNCTION	LOAD RATINGS KVA	HP	FLA	MCA	MFS	V	PH	CONDUCTORS & CONDUIT	NOTES
B-1	BOILER			5			120	1	(2)12 AWG, (1)12 AWG EGC, 1/2" C.	
B-2	BOILER			5			120	1	(2)12 AWG, (1)12 AWG EGC, 1/2" C.	
B-3	BOILER			5			120	1	(2)12 AWG, (1)12 AWG EGC, 1/2" C.	
B-4	BOILER			5			120	1	(2)12 AWG, (1)12 AWG EGC, 1/2" C.	
BRF-1	BOILER ROOM FAN		1/3				120	1	(2)12 AWG, (1)12 AWG EGC, 1/2" C.	1
CF-1	CEILING FAN		FHP				120	1	(2)12 AWG, (1)12 AWG EGC, 1/2" C.	
CF-2	CEILING FAN		FHP				120	1	(2)12 AWG, (1)12 AWG EGC, 1/2" C.	
CF-3	CEILING FAN		FHP				120	1	(2)12 AWG, (1)12 AWG EGC, 1/2" C.	
DT-1	DAY TANK		1/3				120	1	(2)12 AWG, (1)12 AWG EGC, 1/2" C.	
EF-1	EXHAUST FAN	118W					120	1	(2)12 AWG, (1)12 AWG EGC, 1/2" C.	1
EF-2	EXHAUST FAN	118W					120	1	(2)12 AWG, (1)12 AWG EGC, 1/2" C.	
EF-3	EXHAUST FAN	118W					120	1	(2)12 AWG, (1)12 AWG EGC, 1/2" C.	
LS-1	LIFT STATION		(2)2				208	3	(3)10 AWG, (1)10 AWG EGC, 3/4" C.	2
MUF-1	MAKE-UP FAN		1/3				120	1	(2)12 AWG, (1)12 AWG EGC, 1/2" C.	
PMP-1A	CIRCULATION PUMP		1/2				120	1	(2)12 AWG, (1)12 AWG EGC, 1/2" C.	
PMP-1B	CIRCULATION PUMP		1/2				120	1	(2)12 AWG, (1)12 AWG EGC, 1/2" C.	
PMP-2A	CIRCULATION PUMP		2				208	3	(3)12 AWG, (1)12 AWG EGC, 1/2" C.	
PMP-2B	CIRCULATION PUMP		2				208	3	(3)12 AWG, (1)12 AWG EGC, 1/2" C.	
PMP-3	CIRCULATION PUMP		1.5				208	3	(3)12 AWG, (1)12 AWG EGC, 1/2" C.	
PMP-4	CIRCULATION PUMP		1/2				120	1	(2)12 AWG, (1)12 AWG EGC, 1/2" C.	
PMP-5	CIRCULATION PUMP		1/2				120	1	(2)12 AWG, (1)12 AWG EGC, 1/2" C.	
PMP-6A	PRESSURE PUMP		1.5				120	1	(2)8 AWG, (1)10 AWG EGC, 1/2" C.	
PMP-6B	PRESSURE PUMP		1.5				120	1	(2)8 AWG, (1)10 AWG EGC, 1/2" C.	
PMP-7	CIRCULATION PUMP		FHP				120	1	(2)12 AWG, (1)12 AWG EGC, 1/2" C.	
PMP-8A	CIRCULATION PUMP		1/6				120	1	(2)12 AWG, (1)12 AWG EGC, 1/2" C.	
PMP-8B	CIRCULATION PUMP		1/6				120	1	(2)12 AWG, (1)12 AWG EGC, 1/2" C.	
PMP-9	CIRCULATION PUMP		FHP				120	1	(2)12 AWG, (1)12 AWG EGC, 1/2" C.	
PMP-10	CIRCULATION PUMP		1/2				120	1	(2)12 AWG, (1)12 AWG EGC, 1/2" C.	
UH-1	UNIT HEATER		1/3				120	1	(2)12 AWG, (1)12 AWG EGC, 1/2" C.	1
UH-2	UNIT HEATER		1/3				120	1	(2)12 AWG, (1)12 AWG EGC, 1/2" C.	1
UH-3	UNIT HEATER		1/3				120	1	(2)12 AWG, (1)12 AWG EGC, 1/2" C.	1
UH-4	UNIT HEATER		1/8				120	1	(2)12 AWG, (1)12 AWG EGC, 1/2" C.	
UH-5	UNIT HEATER		1/8				120	1	(2)12 AWG, (1)12 AWG EGC, 1/2" C.	
UH-6	CABINET UNIT HEATER		FHP				120	1	(2)12 AWG, (1)12 AWG EGC, 1/2" C.	
UH-7	UNIT HEATER		1/8				120	1	(2)12 AWG, (1)12 AWG EGC, 1/2" C.	
UH-8	CABINET UNIT HEATER		FHP				120	1	(2)12 AWG, (1)12 AWG EGC, 1/2" C.	
UH-9	UNIT HEATER		1/8				120	1	(2)12 AWG, (1)12 AWG EGC, 1/2" C.	

STANDARD NOTES

A) REFER TO FLOOR PLAN DRAWINGS FOR EQUIPMENT TYPE REQUIREMENTS, LOCATIONS AND QUANTITIES.
B) COORDINATE ALL CONNECTION REQUIREMENTS WITH MECHANICAL AND ACTUAL EQUIPMENT SUPPLIED PRIOR TO ROUGH-IN.

REFERENCED NOTES

1) PROVIDE HP RATED RELAY-IN-A-BOX (RIB) AS NECESSARY FOR CONTROL. COORDINATE ALL CONTROL REQUIREMENTS WITH MECHANICAL.
2) LIFT STATION CONTROL PANEL PROVIDED WITH SINGLE POINT POWER CONNECTION.

EIC ENGINEERS, INC
ELECTRICAL ENGINEERS
6927 OLD SEWARD HWY, SUITE 200
ANCHORAGE, AK 99518
T 907.349.9712
F 907.349.9713
www.eiceng.com
EIC JOB #E13-1941

RECORD DRAWING CERTIFICATE
THESE DRAWINGS REFLECT RECORDED INFORMATION OBTAINED DURING CONSTRUCTION. INFORMATION PROVIDED HEREIN IS ACCURATE TO THE BEST OF MY KNOWLEDGE.
NAME DATE

SCALE:
MAN IS ONE INCH ON ORIGINAL DRAWING 0 1"
IF NOT ONE INCH ON THIS SHEET, ADJUST SCALES ACCORDINGLY

CONSTRUCTION RECORD
FIELD BOOK
STAKING
FOREMAN
AS-BUILT
INSPECTOR

STATE OF ALASKA 49TH BRIAN L. SCHMID No. 8311784 REGISTERED PROFESSIONAL ENGINEER

WASHETERIA AND WATER TANK
ELECTRICAL POWER PLAN
CHEFORNAK, ALASKA

CE2 ENGINEERS, INC.
PO BOX 223948 ANCHORAGE, AK 99523 PH: 907-349-1015 FAX: 907-349-1015

REVISION	BY	DATE

Project No. ____
Date JUNE 2014
Designed BLS
Drawn BLS
Approved EDC

Sheet No.
E4.1

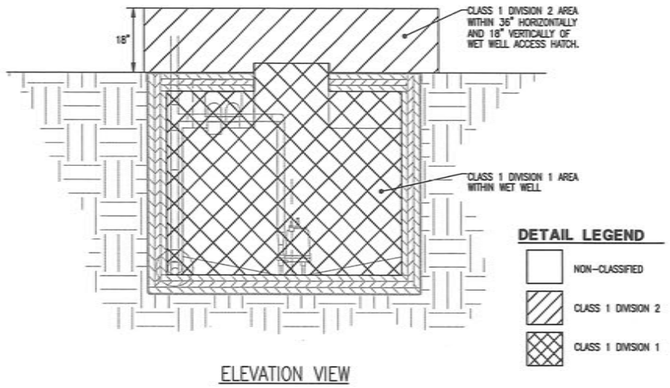

ELEVATION VIEW

1 (E4.2) LIFT STATION NEC CLASSIFIED BOUNDARY DETAIL

SCALE: NONE

SHEET NOTES

1. PROVIDE PUMP POWER AND CONTROL WIRING AND CONDUITS WITH SEAL-OFFS FROM LIFT STATION TRANSITION RACK TO LIFT STATION CONTROL PANEL LOCATED IN WASHETERIA BUILDING. COORDINATE CONDUIT SIZING AND REQUIREMENTS WITH CIVIL AND LIFT STATION EQUIPMENT PROVIDED.
2. PROVIDE POST MOUNTED RACK WITH TRANSITION JUNCTION BOXES. JUNCTION BOXES TO HAVE TERMINAL STRIPS AND INSULATED POWER DISTRIBUTION BLOCKS FOR CONNECTING PUMP POWER AND CONTROL CABLES. COORDINATE EXACT REQUIREMENTS WITH CIVIL AND LIFT STATION EQUIPMENT PROVIDED. SEE 3/E4.2 FOR TYPICAL RACK LAYOUT AND CONSTRUCTION.
3. PROVIDE CONDUITS STUBBED TO LIFT STATION FROM TRANSITION RACK FOR LIFT STATION PUMP AND CONTROL CABLES. COORDINATE CONDUIT SIZING AND REQUIREMENTS WITH CIVIL AND EQUIPMENT PROVIDED.

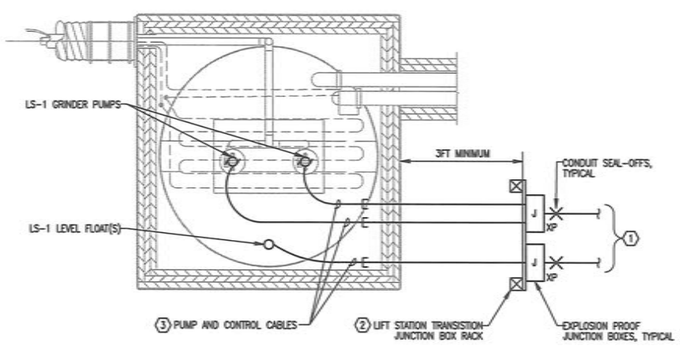

2 (E4.2) LIFT STATION POWER PLAN

SCALE: 1/2" = 1'-0"

PLAN N

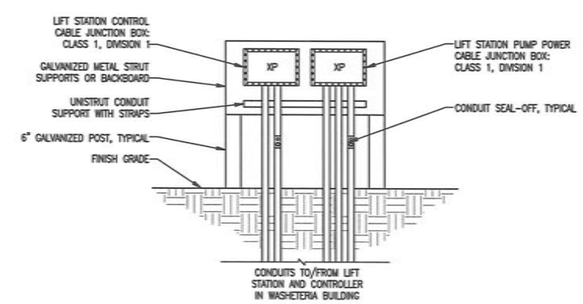

3 (E.2) LIFT STATION TRANSITION RACK DETAIL

SCALE: NONE

EIC ENGINEERS, INC
ELECTRICAL ENGINEERS
6927 OLD SEWARD HWY, SUITE 200
ANCHORAGE, AK 99518
T 907.349.9712
F 907.349.9713
www.eiceng.com
EIC JOB #E13-1941

RECORD DRAWING CERTIFICATE

THESE DRAWINGS REFLECT RECORDED INFORMATION OBTAINED DURING CONSTRUCTION. INFORMATION PROVIDED HEREIN IS ACCURATE TO THE BEST OF MY KNOWLEDGE.

NAME DATE

SCALE:

BAR IS ONE INCH ON ORIGINAL DRAWING 0 1"

IF NOT ONE INCH ON THIS SHEET, ADJUST SCALE ACCORDINGLY

CONSTRUCTION RECORD

FIELD BOOK

STAKING

FOREMAN

AS-BUILT

INSPECTOR

STATE OF ALASKA 49TH BRIAN L. SCHMID No. EC-11784 REGISTERED PROFESSIONAL ENGINEER

WASHETERIA AND WATER TANK

ELECTRICAL POWER PLAN

CHEFORNAK, ALASKA

CE2 ENGINEERS, INC.
PO BOX 230948 ANCHORAGE, AK 99523 PH: 907-349-1010 FAX: 907-349-1015

REVISION	BY	DATE

Project No. ____ Date JUNE 2014

Designed BLS

Drawn BLS

Approved EDC

Sheet No. E4.2

DETAIL EQUIPMENT

1. SERVICE METER/MAIN– SE RATED, NEMA 4, 200A BUS, 125A MAIN CB, 480V, 3ø, 4W. CIRCLE AW OR EQUIVALENT.
2. PANEL 'A' SECTION 1– NEMA 1, 225A, 208Y/120V, 3ø, 4W, 225A MAIN CB, 42 SPACE, WITH FEED THRU LUGS. SQUARE D TYPE NQOD OR EQUIVALENT.
3. PANEL 'A' SECTION 2– NEMA 1, 225A, 208Y/120V, 3ø, 4W, MAIN LUGS ONLY, 42 SPACE. SQUARE D TYPE NQOD OR EQUIVALENT.
4. MANUAL TRANSFER SWITCH 'MTS–1'– NEMA 1, 200A, 208Y/120V, 3ø, 4W, 4–POLE. ASCO OR EQUIVALENT.

FEEDER SCHEDULE

TAG	COPPER	OPTIONAL ALUMINUM	NOTES
200–4A	2"C, (4)3/0 AWG, (1)4 AWG GEC	2.5"C, (4)250 KCMIL, (1)2 AWG GEC	
200–4B	2"C, (4)3/0 AWG, (1)6 AWG EGC	2.5"C, (4)250 KCMIL, (1)4 AWG EGC	

STANDARD NOTES

A) ALUMINUM CONDUCTORS MAY BE USED IN LIEU OF COPPER IF ACCEPTABLE TO OWNER.

REFERENCED NOTES

1) NOT USED.

DETAIL NOTES

1. CONTRACTOR TO FIELD VERIFY PORTABLE GENERATOR RECEPTACLE CONFIGURATION WITH OWNER.

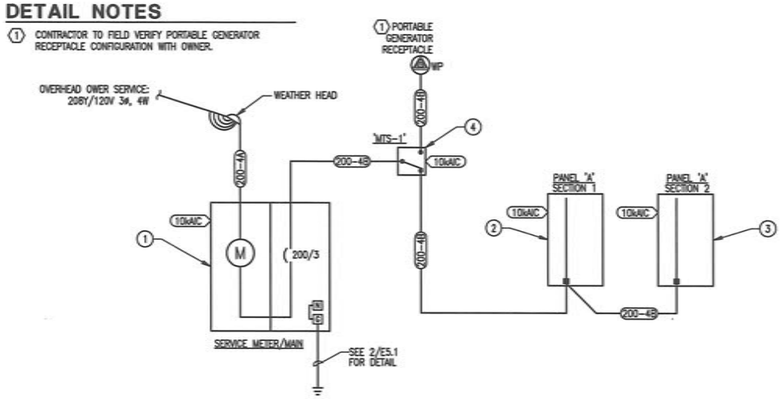

1 WASHETERIA POWER ONE-LINE DIAGRAM
E5.1 SCALE: NONE

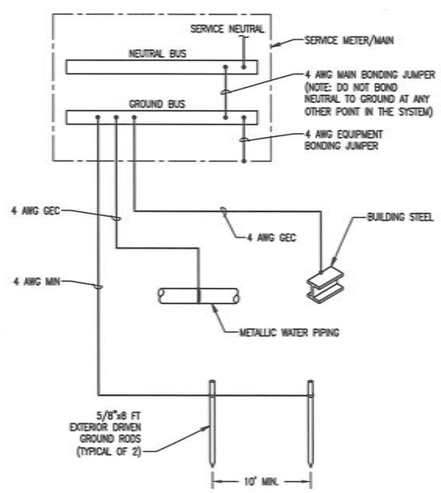

DETAIL NOTES

1. BOND ALL PIPING AND BUILDING DISCONTINUITIES TO PROVIDE ELECTRICALLY CONTINUOUS SYSTEM. PROVIDE BOND JUMPER EQUAL TO GROUNDING ELECTRODE CONDUCTOR FOR THAT SYSTEM.
2. PROVIDE RACEWAY FOR ALL CONDUCTORS. RACEWAY TO BE METALLIC IN PLENUM AIR SPACES. WHERE METALLIC RACEWAY IS USED BOND EACH END TO CONDUCTOR.
3. ALL CONDUCTOR SIZES SHOWN ARE COPPER.

2 WASHETERIA GROUNDING SYSTEM DIAGRAM
E5.1 SCALE: NONE

PANEL "A" SCHEDULE

VOLTAGE: 208Y/120V, 3PH, 4W
BUS: 225
MAIN LUGS ONLY – FED BY 200A OPD
LOCATION: "MECHANICAL ROOM"
MIN. A.I.C. RATING: SEE NOTE
ENCLOSURE: NEMA 1
MOUNTING: SURFACE

LOAD DESCRIPTION	NOTE	KVA	LOAD	AMP	P	CKT	ABC	CKT	AMP	P	LOAD DESCRIPTION	NOTE	KVA	LOAD
REC–BOILER,EXTERIOR		0.54	R	20	1	-1	+1	-2	20	1	LTG–ADA TOILET,BOILER,MECHANICAL,TOILET		0.81	L
REC–MECHANICAL		0.72	R	20	1	-3	+3	-4	20	1	LTG–EGRESS,LAUNDRY		0.53	L
REC–ADA TOILET		0.18	R	20	1	-5	+5	-6	20	1	LTG–EGRESS,EXTERIOR,MECHANICAL,OFFICE,VESTIBULE		0.28	L
REC–TOILET		0.18	R	20	1	-7	+7	-8	20	1	LTG–EXTERIOR		1.25	L
REC–LAUNDRY		0.72	R	20	1	-9	+9	-10	20	1	CF–1,CF–2,CF–3		0.48	C
REC–OFFICE		0.54	R	20	1	-11	+11	-12	20	1	UH–1		0.86	M
REC–DRYER,EXTERIOR,VESTIBULE		0.54	R	20	1	-13	+13	-14	20	1	UH–2		0.86	M
E–1		0.60	M	20	1	-15	+15	-16	20	1	UH–3		0.86	M
E–2		0.60	M	20	1	-17	+17	-18	20	1	UH–5,UH–8		0.72	M
E–3		0.60	M	20	1	-19	+19	-20	20	1	UH–4,UH–9		0.72	M
E–4		0.60	M	20	1	-21	+21	-22	20	1	EF–1,EF–2,EF–3		0.58	M
UH–5,UH–7		0.72	M	20	1	-23	+23	-24	20	1	TE–1		0.86	M
BFP–1		0.86	M	20	1	-25	+25	-26	20	1	PMP–4		1.18	M
PMP–1A		1.18	M	20	1	-27	+27	-28	20	1	PMP–1B		1.18	X
PMP–5A		2.40	M	40	1	-29	+29	-30	40	1	PMP–5B		2.40	X
PMP–3A		2.70	LM	20	3	-31	+31	-32	20	3	PMP–3B		2.70	X
			–	–	–	-33	+33	-34	–	–	–			
			–	–	–	-35	+35	-36	–	–	–			
SPARE			S	20	1	-37	+37	-38	20	1	SPARE			S
SPARE			S	20	1	-39	+39	-40	20	1	SPARE			S
SPARE			S	20	1	-41	+41	-42	20	1	SPARE			S
LS–1 LIFT STATION		8.60	M	30	3	-43	+43	-44	20	1	PMP–7,PMP–9		0.46	M
			–	–	–	-45	+45	-46	20	1	PMP–9A,BB		0.53	M
			–	–	–	-47	+47	-48	20	1	MUF–1		0.86	M
SPARE			S	20	1	-49	+49	-50	15	3	30ø DRYER		2.88	N
SPARE			S	20	1	-51	+51	-52	–	–	–			–
SPARE			S	20	1	-53	+53	-54	–	–	–			–
SPARE			S	20	1	-55	+55	-56	15	3	30ø DRYER		2.88	N
15ø WASHER		1.08	N	20	1	-57	+57	-58	–	–	–			–
15ø WASHER		1.08	N	20	1	-59	+59	-60	–	–	–			–
30ø WASHER		1.81	N	15	3	-61	+61	-62	15	3	30ø DRYER		2.88	N
			–	–	–	-63	+63	-64	–	–	–			–
			–	–	–	-65	+65	-66	–	–	–			–
30ø WASHER		1.81	N	15	3	-67	+67	-68	15	3	30ø DRYER		2.88	N
			–	–	–	-69	+69	-70	–	–	–			–
			–	–	–	-71	+71	-72	–	–	–			–
30ø WASHER		1.81	N	15	3	-73	+73	-74	15	3	30ø DRYER		2.88	N
			–	–	–	-75	+75	-76	–	–	–			–
			–	–	–	-77	+77	-78	–	–	–			–
30ø WASHER		1.81	N	15	3	-79	+79	-80	15	3	30ø DRYER		2.88	N
			–	–	–	-81	+81	-82	–	–	–			–
			–	–	–	-83	+83	-84	–	–	–			–

SUMMARY BY LOAD TYPE		CONNECTED KVA PH A	PH B	PH C	FEED	TOTAL KVA	NEC %	NEC TOTAL	NOTES:
G	GENERAL LOADS						N/A		
A	APPLIANCE						0.75		
E	ELECTRIC RANGE						1.00		
L	LIGHTING	2.1	0.5	0.3		2.9	1.25	3.6	
R	RECEPTACLES	1.3	1.4	0.7		3.4	10K+50%	3.4	
M	MOTORS	7.6	7.2	9.8		24.7	1.00	24.7	
LM	LARGEST MOTOR	0.9	0.9	0.9		2.7	1.25	3.4	
C	CONTINUOUS		0.5			0.5	1.25	0.6	
N	NON–CONTINUOUS	8.2	9.3	9.3		26.7	1.00	26.7	
S	SPARE						1.00		
X	NON–COINCIDENT	0.9	2.1	3.3		6.3	0.00		
K	KITCHEN						1.00		
D	DRYER						1.00		
O	OTHER						1.00		
EIR	EXIST'G TO REMAIN						1.25		
F	FEEDER								
TOTAL KVA (PHASE)		20.8	21.9	24.4		67.1		62.3	
TOTAL AMPERES		173.6	182.3	203.8		186.2		173.0	
PHASE BALANCE, ABC		A–B	B–C	C–A					
PERCENT		4.7%	11.0%	15.7%					

EIC ENGINEERS, INC
ELECTRICAL ENGINEERS
6927 OLD SEWARD HWY, SUITE 200
ANCHORAGE, AK 99518
T 907.349.9712
F 907.349.9713
www.eiceng.com
EIC JOB #E13-1941

RECORD DRAWING CERTIFICATE
THESE DRAWINGS REFLECT RECORDED INFORMATION OBTAINED DURING CONSTRUCTION. INFORMATION PROVIDED HEREIN IS ACCURATE TO THE BEST OF MY KNOWLEDGE.
NAME
DATE

SCALE:
BAR IS ONE INCH ON ORIGINAL DRAWING
0 1"
IF NOT ONE INCH ON THIS SHEET, ADJUST SCALES ACCORDINGLY

CONSTRUCTION RECORD
FIELD BOOK
STAKING
FOREMAN
AS-BUILT
INSPECTOR

STATE OF ALASKA
BRIAN L. SCHMID
No. EE-11784
REGISTERED PROFESSIONAL ENGINEER
49th

WASHETERIA AND WATER TANK
ELECTRICAL DIAGRAMS AND DETAILS
CHEFORNAK, ALASKA

CE2 ENGINEERS, INC.
PO BOX 222844 ANCHORAGE, AK 99503 PH: 907-349-1019 FAX: 907-349-1015

REVISION	BY	DATE

Project No. ____
Date JUNE 2014
Designed BLS
Drawn BLS
Approved EDC

Sheet No.
E5.1

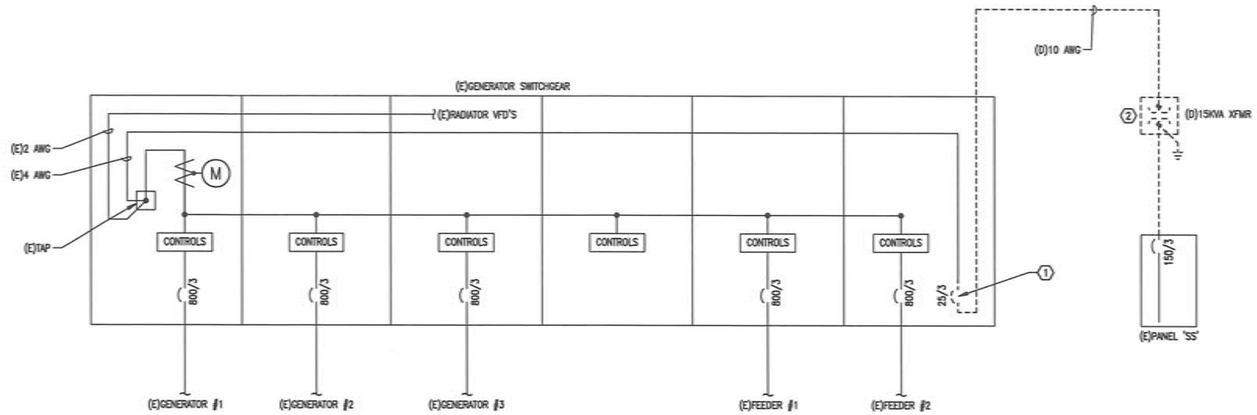

DETAIL NOTES

1. DEMOLISH 25A 3-POLE CIRCUIT BREAKER. CIRCUIT BREAKER TO BE REPLACED.
2. DEMOLISH 15KVA TRANSFORMER AND FEEDERS. TRANSFORMER AND FEEDERS TO BE REPLACED.

1 POWER PLANT DEMO WORK POWER ONE-LINE DIAGRAM

E5.2 SCALE: NONE

REQUIRED MINIMUM ELECTRODE CONDUCTOR SIZE	
TRANSFORMER SECONDARY LARGEST CONDUCTOR*	ELECTRODE CONDUCTOR SIZE
2 OR SMALLER	8
1 OR 1/0	6
2/0 OR 3/0	4
OVER 3/0 THROUGH 350 KCMIL	2
OVER 350 KCMIL THROUGH 600 KCMIL	1/0
OVER 600 KCMIL THROUGH 1100 KCMIL	2/0
OVER 1100 KCMIL	3/0

*LARGEST SUM OF THE AREAS OF CORRESPONDING PARELLED CONDUCTORS OF A SET.

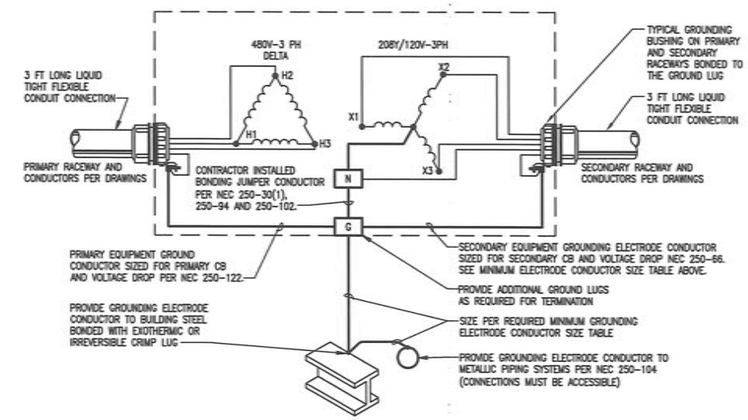

3 TYPICAL TRANSFORMER GROUNDING DETAIL

E5.2 SCALE: NONE

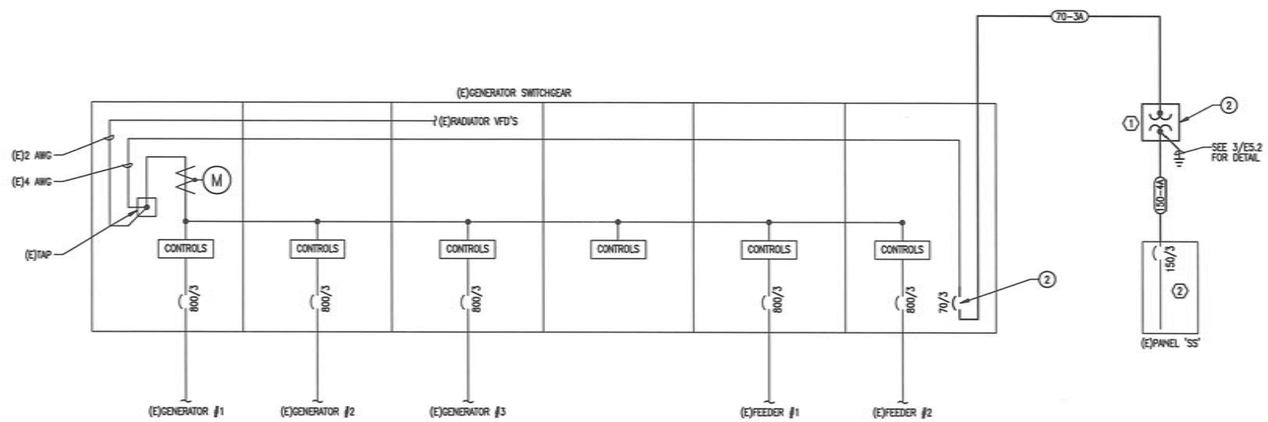

DETAIL NOTES

1. MOUNT TRANSFORMER TO WALL AT PREVIOUS TRANSFORMER LOCATION. TRANSFORMER MOUNTING SHALL MEET SIESMIC REQUIREMENTS.
2. UTILIZE SPARE/SPACE IN EXISTING PANEL FOR FEEDING NEW POWER PLANT CIRCUITS. SEE PANEL SCHEDULE FOR DETAIL.

DETAIL EQUIPMENT

1. CIRCUIT BREAKER- 70A, 3-POLE, 480V, 65kAIC, GENERAL ELECTRIC TYPE SPECTRA RMS.
2. TRANSFORMER 45KVA, 480V/Δ PRIMARY, 208Y/120V SECONDARY, NEMA 1 ENCLOSURE. SQUARE D OR EQUIVALENT.

FEEDER SCHEDULE			
TAG	COPPER	OPTIONAL ALUMINUM	NOTES
70-3A	1"C, (3)4 AWG, (1)6 AWG EGC	1.25" C, (3)2 AWG, (1)6 AWG EGC	
150-4A	2"C, (4)1/0 AWG, (1)6 AWG GEC	2"C, (4)3/0 AWG, (1)4 AWG GEC	
STANDARD NOTES			
A) ALUMINUM CONDUCTORS MAY BE USED IN LIEU OF COPPER IF ACCEPTABLE TO OWNER.			
REFERENCED NOTES			
1) NOT USED.			

1 POWER PLANT NEW WORK POWER ONE-LINE DIAGRAM

E5.2 SCALE: NONE

(EXISTING) PANEL "SS" SCHEDULE

VOLTAGE: 208Y/120V, 3PH, 4W
BUS: 200
MAIN: 150A CB
LOCATION: "POWER PLANT BUILDING"
MIN. A.I.C. RATING: EXISTING
ENCLOSURE: NEMA 1
MOUNTING: SURFACE

LOAD DESCRIPTION	NOTE	KVA	LOAD	AMP	P	CKT	ABC	CKT	AMP	P	LOAD DESCRIPTION	NOTE	KVA	LOAD
EF-1	1		ETR	20	2	-1		-2	40	3	FUEL SYSTEM CONTROL PANEL	1		ETR
			–	–	–	-3		-4	–	–	–			–
EF-2	1		ETR	20	2	-5		-6	–	–	–			–
			–	–	–	-7		-8	15	1	INTERMEDIATE TANK CONTROL PANEL	1		ETR
EF-3	1		ETR	20	2	-9		-10	20	1	USED OIL PUMP P-U01	1		ETR
			–	–	–	-11		-12	20	1	UH-1 & P-HR1	1		ETR
EF-4	1		ETR	20	1	-13		-14	20	1	P-HR2 & P-HR3	1		ETR
BATTERY CHARGER #1	1		ETR	20	1	-15		-16	20	1	SPARE			S
BATTERY CHARGER #2	1		ETR	20	1	-17		-18	20	1	RECEPTACLES (GENERATOR ROOM)	1		ETR
BATTERY CHARGER #3	1		ETR	20	1	-19		-20	20	1	RECEPTACLES (CONTROL ROOM)	1		ETR
LIGHTS (GENERATOR ROOM a)	1		ETR	20	1	-21		-22	20	1	SPARE			S
LIGHTS (GENERATOR ROOM b)	1		ETR	20	1	-23		-24	20	1	SWITCHGEAR LIGHTS & RECEPTACLES	1		ETR
LIGHTS (CONTROL ROOM)	1		ETR	20	1	-25		-26	20	1	FIRE SUPPRESSION CONTROL PANEL	1		ETR
AIR COMPRESSOR	1		ETR	30	2	-27		-28	20	1	COMBUSTION AIR	1		ETR
			–	–	–	-29		-30	15	3	PMP-3	3	2.38	LM
PMP-5	2	1.18	M	20	1	-31		-32	–	–				–
PMP10	2	1.18	M	20	1	-33		-34	–	–				–
UTILIDOR HEAT TRACE	3,4	1.00	C	20	1	-35		-36	20	1	SPARE			S
SPARE			S	20	1	-37		-38	20	1	SPARE			S
SPARE			S	20	2	-39		-40	20	2	SPARE			S
			–	–	–	-41		-42	–	–	–			-

SUMMARY BY LOAD TYPE	CONNECTED KVA PH A	PH B	PH C	FEED	TOTAL KVA	NEC %	NEC TOTAL
G GENERAL LOADS						N/A	
A APPLIANCE						0.75	
E ELECTRIC RANGE						1.00	
L LIGHTING						1.25	
R RECEPTACLES						10K+50%	
M MOTORS	1.2	1.2			2.4	1.00	2.4
LM LARGEST MOTOR	0.8	0.8	0.8		2.4	1.25	3.0
C CONTINUOUS			1.0		1.0	1.25	1.3
N NON-CONTINUOUS						1.00	
S SPARE						1.00	
X NON-COINCIDENT						0.00	
K KITCHEN						1.00	
D DRYER						1.00	
O OTHER						1.00	
ETR EXIST'G TO REMAIN						1.25	
F FEEDER							
TOTAL KVA (PHASE)	2.0	2.0	1.8		5.7		6.6
TOTAL AMPERES	16.4	16.4	14.9		15.9		18.3
PHASE BALANCE, ABC	A-B	B-C	C-A				
PERCENT	0.0%	9.4%	9.4%				

NOTES:
1. EXISTING LOAD TO REMAIN.
2. NEW LOAD ON EXISTING CIRCUIT BREAKER.
3. NEW LOAD ON NEW CIRCUIT BREAKER.
4. PROVIDE 30mA GFP CIRCUIT BREAKER.

LOAD ADDED TO PANEL IS 6.8KVA. PANEL IS ADEQUATE TO SUPPORT THIS NEW LOAD WITH TRANSFORMER UPGRADE.

EIC ENGINEERS, INC
ELECTRICAL ENGINEERS
6927 OLD SEWARD HWY, SUITE 200
ANCHORAGE, AK 99518
T 907.349.9712
F 907.349.9713
www.eiceng.com
EIC JOB #E13-1941

RECORD DRAWING CERTIFICATE
THESE DRAWINGS REFLECT RECORDED INFORMATION OBTAINED DURING CONSTRUCTION. INFORMATION PROVIDED HEREIN IS ACCURATE TO THE BEST OF MY KNOWLEDGE.
NAME DATE

SCALE:
BAR IS ONE INCH ON ORIGINAL DRAWING 0 1"
IF NOT ONE INCH ON THIS SHEET, ADJUST SCALE ACCORDINGLY

CONSTRUCTION RECORD
FIELD BOOK
STANKING
FOREMAN
AS-BUILT
INSPECTOR

STATE OF ALASKA BRIAN L. SCHMID No. EE-11784 REGISTERED PROFESSIONAL ENGINEER

WASHETERIA AND WATER TANK
ELECTRICAL DIAGRAMS & DETAILS
CHEFORNAK, ALASKA

CE2 ENGINEERS, INC.
PO BOX 232948 ANCHORAGE, AK 99523 PH: 907-349-1016 FAX: 907-349-1015

REVISION	BY	DATE

Project No. ____ Date JUNE 2014
Designed BLS
Drawn BLS
Approved EDC

Sheet No. E5.2

CITY OF CHEFORNAK
FACULTATIVE LAGOON PROJECT

TWO CELL LAGOON SYSTEM &
2,100 LF FORCE MAIN EXTENSION

In Cooperation with the State of Alaska
Department of Environmental Conservation
Village Safe Water Program

ISSUED FOR AGENCY REVIEW - FEB. 2014

SHEET INDEX

No.	Title
	COVER SHEET
G1.0	GENERAL NOTES
G1.1	LEGEND AND WORK SUMMARY
G1.2	VICINITY MAP
G2.1	SURVEY CONTROL
G3.1	TEST HOLE BORING LOGS
G3.2	TEST HOLE BORING LOGS
G3.3	TEST HOLE BORING LOGS
G3.4	TEST HOLE BORING LOGS
G4.0	LAGOON OPERATING PLAN
C1.0	KEY MAP AND DESIGN CRITERIA
C1.1	LAGOON SITE PLAN
C1.2	LAGOON CROSS SECTIONS
C1.3	LAGOON INLET STRUCTURE
C1.4	CELL TRANSFER STRUCTURE
C1.5	LAGOON DETAILS
C2.1	PLAN AND PROFILE
C2.2	PLAN AND PROFILE
C2.3	PLAN AND PROFILE
C2.4	PLAN AND PROFILE
C5.1	ARCTIC PIPE DETAILS
C5.2	LAGOON AND FORCE MAIN DETAILS
C5.3	JUNCTION BOX AND DETAILS
C5.4	ARCTIC PIPE HELICAL PIER SUPPORT DETAILS
C5.5	FENCING DETAILS
C5.6	JUNCTION / EXPANSION BOX ASSEMBLY DETAILS
C5.7	WINTER TRAIL CROSSSING DETAILS

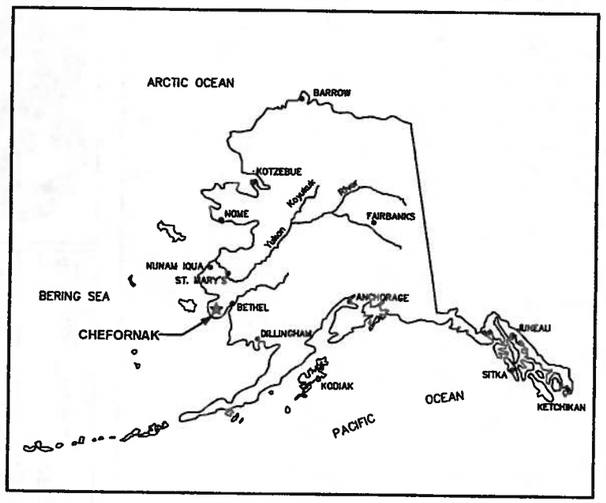

LOCATION MAP

CE2 ENGINEERS, INC.
PO BOX 232948 ANCHORAGE, AK 99523 PH: 907-349-1010 FAX: 907-349-1015
ANCHORAGE, ALASKA

STATE OF ALASKA 49TH Michael R. Erdman No. 6252 REGISTERED PROFESSIONAL ENGINEER
2-28-2014

CONSULTANT

RECORD DRAWING CERTIFICATE

THESE DRAWINGS REFLECT RECORDED INFORMATION OBTAINED DURING CONSTRUCTION.
INFORMATION PROVIDED HEREIN IS ACCURATE TO THE BEST OF MY KNOWLEDGE.

NAME DATE

Project Number (Consultant) _____
VSW Project Manager _____
Construction Foreman _____
Final Design (Date) _____
ADEC Approval (Date) _____
Construction Period (From) _____ (To) _____
As-Builts (Date) _____

PROJECT NARRATIVE

THIS PROJECT WILL CONSIST OF 2,100 LINEAR FEET OF HELICAL PIER-SUPPORTED SEWER FORCE MAIN, AND A NEW TWO-CELL FACULTATIVE SEWAGE LAGOON.

THE NEW FORCE MAIN WILL CONNECT TO THE EXISTING SCHOOL FORCE MAIN, AND TRANSPORT WASTEWATER FROM THE SCHOOL, WASHETERIA AND FUTURE HONEYBUCKET DUMP STATION TO THE NEW LAGOON SITE, LOCATED APPROXIMATELY 2,700 FEET NORTHWEST OF THE EXISTING SCHOOL COMPLEX.

THE NEW SEWAGE LAGOON HAS A DESIGN LIFE OF 20 YEARS, AND IS SIZED TO TREAT 9,764 GALLONS OF WASTEWATER PER DAY, FROM THE COMMUNITY (HONEYBUCKETS), WASHETERIA AND SCHOOL. THE LAGOON WILL BE CONSTRUCTED BY EXCAVATING AND USING THE ON-SITE SILTY SOILS TO CONSTRUCT DIKES.

G:\ACAD\CHEFORNAK\CYF1101 Sewage Lagoon\COVER.dwg, 2/28/2014 3:27:19 PM, cmerz, \\Ce2main\LANIER MP C2050/LD520C PCL 6

GENERAL NOTES

A. GENERAL:

1. THE PROJECT SUPERINTENDENT SHALL MAINTAIN A CLEAN SET OF "AS BUILT" RECORD DRAWINGS SHOWING THE LOCATIONS AND SWING TIES TO ALL APPURTENANCES. ALL ELEVATIONS SHALL BE MARKED ASB (AS-BUILT) WITH THE CORRECT VALUE INSERTED. DRAWINGS SHALL BE KEPT CURRENT IN RED PENCIL ON A DAILY BASIS IN A NEAT, LEGIBLE FASHION. COPIES OF THE AS-BUILT DRAWINGS SHALL BE SUBMITTED TO THE CITY OF CHEFORNAK AND VSW UPON COMPLETION OF CONSTRUCTION.

2. SELECTED POINTS IN THE COMMUNITY ARE SHOWN ON SHEET G2.1, GIVING STATE PLANE COORDINATES AND ELEVATIONS.

3. EXISTING UTILITIES ARE SHOWN IN APPROXIMATE LOCATIONS TO THE BEST KNOWLEDGE OF THE ENGINEER AT THE TIME OF DESIGN. RECORDS MAY NOT BE COMPLETELY ACCURATE. THE PROJECT SUPERINTENDENT SHALL VERIFY HORIZONTAL AND VERTICAL LOCATIONS OF UTILITIES WITHIN EACH CONSTRUCTION REACH PRIOR TO BEGINNING WORK.

4. THE TOP OF DIKE ELEVATION IS ESTIMATED TO BE 2.0 FEET ABOVE THE 100-YEAR FLOOD ELEVATION.

B. ARCTIC PIPE:

1. CARRIER PIPE:
THE FORCEMAIN SHALL BE 4" HDPE, SDR 11. GRAVITY CELL TRANSFER PIPING SHALL BE 8" HDPE, SDR 17. ALL HDPE PIPING SHALL BE LISTED BY THE PPI WITH A DESIGNATION OF PE4710 AND A CELL CLASSIFICATION OF PE445574C OR BETTER AS PER ASTM D3350.

2. INSULATION:
ARCTIC PIPE INSULATION SHALL BE CLOSED CELL (ASTM D2341 CELL CLASSIFICATION 550674970034) URETHANE FOAM WITH A MAXIMUM K FACTOR OF 0.155 BTU-IN/HR-SF-DEG F. THE INSULATION CORE DENSITY SHALL BE BETWEEN 3.0 AND 4.0 LBS/CF. VOIDS GREATER THAN 0.05 CUBIC INCHES BEYOND 24 INCHES OF EITHER END OF THE PIPE SECTION WILL BE CAUSE FOR REJECTION OF THE PIPE. SEE TECHNICAL SPECIFICATION FOR FURTHER REQUIREMENTS.

3. OUTER JACKET MATERIAL:
THE OUTER JACKET MATERIAL FOR ALL ARCTIC PIPE AND FITTINGS SHALL BE 16 GAUGE HELICAL ALUMINUM PIPE WITH SEAMS THAT WILL WITHSTAND A HYDROSTATIC PRESSURE OF 5 FEET OF WATER WITH NO LEAKAGE.

4. HYDRONIC HEAT TRACE:
HYDRONIC HEAT TRACE (WHERE SPECIFIED) SHALL BE A MINIMUM OF 2" DIA. HDPE, SDR 11 AND LISTED BY THE PLASTIC PIPE INSTITUTE (PPI) WITH A DESIGNATION OF PE4710 AND A CELL CLASSIFICATION OF PE445574C OR BETTER AS PER ASTM D3350.

C. CLEARING AND GRUBBING:

1. THE CONSTRUCTION CREW SHALL REMOVE BRUSH, VEGETATIVE MAT, PEAT AND OTHER OBJECTIONABLE MATERIAL WITHIN THE LAGOON FOOTPRINT. ALL GRUBBED MATERIAL SHALL BE DISPOSED OF IN THE DESIGNATED SPOILS DEPOSITION AREA WITHIN THE PROJECT PROPERTY. THE GRUBBED ORGANIC TOPSOIL SHALL BE LATER USED TO COVER AND REVEGETATE THE DIKE SIDE SLOPES.

D. EARTHWORK:

1. SIDE WALLS OF EXCAVATIONS SHALL BE SLOPED OR SUFFICIENTLY BRACED IN CONFORMANCE WITH SECTION 05.160 OF THE STATE OF ALASKA DEPARTMENT OF LABOR STANDARDS AND THE LATEST FEDERAL OSHA EXCAVATION AND TRENCHING STANDARDS. IF IT IS NECESSARY TO LEAVE AN OPEN EXCAVATION UNATTENDED, THE OPEN EXCAVATION SHALL BE ADEQUATELY SIGNED AND BARRICADED TO WARN RESIDENTS OF THE HAZARD.

2. COMPACTION OF STRUCTURAL FOUNDATIONS, PIPE ZONE MATERIALS, EMBANKMENTS AND ROADWAYS SHALL BE ACCOMPLISHED USING A MINIMUM OF THREE (3) PASSES WITH A 15,000 POUND VIBRATORY DRUM COMPACTOR. EMBANKMENT FILL SHALL BE COMPACTED IN MAXIMUM 8-INCH LIFTS PRIOR TO SUBSEQUENT PLACEMENT OF FILL. SUPERINTENDENT SHALL COORDINATE AN INITIAL EFFORT INSPECTION WITH THE ENGINEER AND VSW TO VERIFY THE ACTUAL COMPACTIVE EFFORT REQUIRED. IF LIGHTER EQUIPMENT IS SUBSTITUTED THE LIFT DEPTH AND NUMBER OF PASSES SHALL BE ADJUSTED TO OBTAIN THE SAME COMPACTIVE EFFORT .

3. WHERE EXCAVATIONS ENCOUNTER GROUNDWATER, DEWATERING SHALL BE IMPLEMENTED AND TEMPORARY SHORING MAY BE REQUIRED TO STABILIZE THE WALLS WHILE EXCESS WATER IS ALLOWED TO DRAIN OR PUMPED OUT OF THE EXCAVATION.

E. REVEGETATION SPECIFICATION:

1. THE ENTIRE AREA DISTURBED BY CONSTRUCTION SHALL BE REVEGETATED AS QUICKLY AS GOOD CONSTRUCTION PRACTICE ALLOWS. AREAS TO BE REVEGETATED SHALL FIRST BE COVERED WITH A MINIMUM 6-INCH LAYER OF FRIABLE, LOOSELY PLACED TOPSOIL, FREE OF DEBRIS. THE FOLLOWING SEED MIXTURE AND FERTILIZER APPLICATION RATES SHALL BE APPLIED:

SEED	NAME/TYPE	RATE	METHOD
RED FESCUE	ARCTARED	14 LBS/ACRE	BROADCAST
BERING HAIRGRASS	NORCOAST	16 LBS/ACRE	BROADCAST
RYE GRASS	ANNUAL	2 LBS/ACRE	BROADCAST
FERTILIZER	20-20-20	180 LBS/ACRE	BROADCAST

2. EROSION CONTROL FABRIC:
USE BIODEGRADABLE JUTE MESH WITH A LIFE OF 1-2 YEARS. INSTALL ON SLOPES AFTER SEEDING AND ANCHOR SECURELY WITH GROUND STAPLES.

F. PIPELINE TESTING:

1. GENERAL:
ALL TESTING SHALL BE IN CONFORMANCE WITH THE FOLLOWING REQUIREMENTS:
ALL TESTS SHALL BE WITNESSED BY A REPRESENTATIVE DESIGNATED BY THE COMMUNITY. UPON SUCCESSFUL COMPLETION OF A TEST THE RESULTS OF THE TEST SHALL BE DOCUMENTED ON A TEST FORM AND ACKNOWLEDGED BY SIGNATURE OF THE COMMUNITY'S REPRESENTATIVE WITNESSING THE TEST AND BY THE PROJECT SUPERINTENDENT. THE SUPERINTENDENT'S RED LINED AS-BUILT DRAWINGS SHALL ALSO NOTE THE TIME AND DATE OF THE TEST, AS WELL AS THE NAME OF THE COMMUNITY'S WITNESS, FOR EACH PIPE SEGMENT TESTED.

2. FORCEMAIN TESTING:
PERFORM HYDROSTATIC TESTING OF ALL FORCEMAIN PIPING. FILL THE LINES WITH POTABLE WATER AND REMOVE AIR POCKETS PRIOR TO STARTING THE TEST. PRESSURIZE TO 100 PSI AND LEAVE FOR A MINIMUM OF 1 HOUR. AFTER THIS INITIAL PERIOD, ADD WATER TO BRING THE PRESSURE UP TO 100 PSI AND BEGIN A ONE HOUR TEST. THERE SHALL BE NO LOSS IN PRESSURE DURING THE 1 HOUR TEST FOR THE PIPING TO BE ACCEPTED.

3. GLYCOL HEAT TRACE TESTING - PERFORM HYDROSTATIC TESTING OF GLYCOL HEAT TRACE. HYDROSTATIC TESTS SHALL BE PERFORMED AFTER INSTALLATION. FILL THE LINE WITH WATER AND REMOVE AIR PRIOR TO STARTING THE TEST. PRESSURIZE TO 1.5 X OPERATING PRESSURE (80 PSI) = 120 PSI AND LEAVE FOR A MINIMUM OF 1-HOUR. AFTER THIS INITIAL PERIOD, ADD WATER TO BRING THE PRESSURE UP TO 120 PSI AND BEGIN A 4-HOUR TEST. FOR THE GLYCOL LOOP TO BE ACCEPTED THERE SHOULD BE NO LOSS IN PRESSURE. NO VISIBLE LEAKS SHOULD BE NOTED UPON A VISUAL INSPECTION OF EACH JOINT UNDER PRESSURE.

G: GEOTEXTILE AND GEOMEMBRANE:

1. GEOTEXTILE FABRIC FOR USE IN LAGOON DIKE "BURRITO WRAPS" SHALL BE NONWOVEN NEEDLE PUNCHED POLYPROPYLENE (PERMEATEX 4100 OR EQUAL)

2. GEOMEMBRANE LINER SHALL BE 45 MIL FLEXIBLE REINFORCED POLYPROPYLENE (NORTHWEST LININGS RPP45 OR EQUAL)

RECORD DRAWING CERTIFICATE
THESE DRAWINGS REFLECT RECORDED INFORMATION OBTAINED DURING CONSTRUCTION. INFORMATION PROVIDED HEREIN IS ACCURATE TO THE BEST OF MY KNOWLEDGE.
NAME: DATE

SCALE: AS SHOWN
BAR IS ONE INCH ON ORIGINAL DRAWING
0 1"
IF NOT ONE INCH ON THIS SHEET, ADJUST SCALES ACCORDINGLY

CONSTRUCTION RECORD
FIELD BOOK
STAKING
FOREMAN
AS-BUILT
INSPECTOR

STATE OF ALASKA 49TH Michael R. Eckman No.6252 REGISTERED PROFESSIONAL ENGINEER

FACULTATIVE LAGOON
GENERAL NOTES
CHEFORNAK, ALASKA

CE2 ENGINEERS, INC.
PO BOX 230568 ANCHORAGE, AK 99523 PH: 907-563-3010 FAX: 907-563-3015

REVISION	BY	DATE
REVISED PER 65% COMMENTS	CM	1/28/14

Project No. ____
Date JAN. 2014
Designed MRE
Drawn LAW
Approved MRE

Sheet No. G1.0

G:\ACAD\CHEFORNAK\CYF1101 Sewage Lagoon\G1.0 GENERAL NOTES LEGEND.dwg, 2/28/2014 3:35:50 PM, cmerz, \\Ce2main\LANIER MP C2050/LD520C PCL 6

LEGEND

EXISTING (PLAN VIEW / PROFILE VIEW)	PROPOSED (PLAN VIEW / PROFILE VIEW)	DESCRIPTION
		GROUND SURFACE
		DRAINAGE/WATER FEATURE
FM	FM	SEWER FORCE MAIN, LIFT STATION, REDUCER, AND DOUBLE WYE CLEANOUT
	SS	SEWER SERVICE LINE
		CULVERT
E		BURIED ELECTRICAL LINE
FO		BURIED FUEL OIL LINE
T		BURIED TELEPHONE LINE
E		OVERHEAD ELECTRIC
		EASEMENT
		UTILITY POLE
		FENCE
24	24	ROADS AND TRAVELED WAYS
		CONTOUR LINE
		R.O.W. (RIGHT OF WAY)
		SHORELINE
		TREES AND/OR BRUSH
MAJOR / MINOR		STRUCTURE
		GROUND PROFILE
		DIRECTION OF DRAINAGE
		PROPERTY LINE
		SECTION LINE
	ELEV 32.0'	BLM BRASS CAPPED MONUMENT
24.5		BENCH MARK
		SPOT ELEVATION
	#1012	REBAR - ABILITY SURVEY POINT NO.
		YELLOW PLASTIC CAP (REBAR)
TRACT 3		TRACT NUMBER
LOT 8		LOT NUMBER
		HEAT TRACE POWER SUPPLY

SECTION AND DETAIL DESIGNATIONS

SECTION LETTER — B — SECTION — C3.5 — NTS — SHEET ON WHICH SECTION IS SHOWN

DETAIL NUMBER — 1 — DETAIL — C3.5 — NTS — SHEET ON WHICH DETAIL IS SHOWN

ABBREVIATIONS

A.P.	ANGLE POINT (HORIZONTAL)
ADEC	ALASKA DEPT. OF ENVIRONMENTAL CONSERVATION
CMP	CORRUGATED METAL PIPE
C.O.E.	CORPS OF ENGINEERS
CULV.	CULVERT
FF	FINISHED FLOOR ELEVATION
G.B.	GRADE BREAK (VERTICAL)
G.V.	GATE VALVE
HDPE	HIGH DENSITY POLYETHYLENE PIPE
INV.	INVERT
IPS	IRON PIPE SIZE (INDUSTRY STANDARD OUTSIDE PIPE DIAMETER)
LF	LINEAR FEET
MFR	MANUFACTURER
MH	MANHOLE
SDR	SIDE DIMENSION RATIO
SHT.	SHEET
SS	STAINLESS STEEL
STA.	STATION
TOJ	TOP OF PIPE JACKET
V.B.	VALVE BOX
WS	WATER SURFACE

WORK SUMMARY

CONSTRUCT A TWO-CELL WASTEWATER TREATMENT LAGOON AND ASSOCIATED HYDRAULIC CONTROL FEATURES.

INSTALL APPROXIMATELY 2100 LF OF FORCEMAIN FROM THE EXISTING SCHOOL TUNDRA POND TO THE PROPOSED FACULTATIVE LAGOON SITE.

INSTALL A HYDRONIC HEAT TRACE AND WASTE HEAT RECOVERY SYSTEM TO PROVIDE FREEZE PROTECTION OF THE LAGOON FORCEMAIN AND HONEYBUCKET DUMPING STATION.

CONSTRUCTION SCHEDULE

THE SOILS AT THE PROPOSED LAGOON SITE ARE COMPOSED PRIMARILY OF ORGANIC AND INORGANIC SILTS. A SUCCESSFUL PROJECT WILL REQUIRE CAREFUL PLANNING TO SEQUENCE THE WORK IN A MANNER THAT BEST UTILIZES LOCAL INORGANIC SILTS. THE ANTICIPATED CONSTRUCTION SEQUENCING AND SCHEDULING IS AS FOLLOWS:

WINTER 2013-2014: INITIAL STRIPPING OF ORGANICS IS DONE IN LATE WINTER. INORGANIC SILTS ARE EXCAVATED AND STOCKPILED IN WINDROWS IN ORDER TO ALLOW FOR FROZEN MOISTURE TO THAW AND TO DRAIN OUT.

SPRING/SUMMER 2014: MATERIALS FOR FORCE MAIN AND LAGOON ARE PROCURED AND SHIPPED BY BARGE TO CHEFORNAK.

FALL/WINTER 2014-2015: FORCE MAIN IS CONSTRUCTED AS SOON AS CONDITIONS ARE ACCEPTABLE TO WORK ON THE TUNDRA. CONSTRUCTION OF DIKES WILL COMMENCE WITH UNFROZEN SILT. BURRITO WRAPS OF SILT WILL BE CONSTRUCTED TO FORM THE DIKES. ADDITIONAL COVERING OF THE BURRITO WRAPS WILL TAKE PLACE, WITH ORGANICS ON THE OUTSIDE OF THE DIKES AND SILT OVER THE WRAPS ON THE INSIDE OF THE DIKES.

SYSTEM STARTUP

FORCEMAIN AND LAGOON STARTUP WILL OCCUR AFTER FORCE MAIN AND LAGOON ARE COMPLETE. SCHOOL WILL BE SERVED FIRST. WASHETERIA WILL BE TIED INTO FORCE MAIN AFTER ITS CONSTRUCTION IS COMPLETE.

STORM WATER MANAGEMENT PLAN

CONSTRUCTION SHALL BE PLANNED AND EXECUTED TO EXPEDITIOUSLY COMPLETE THE PROJECT WHILE MAINTAINING THE CONSTRUCTION SITE IN A MANNER THAT REDUCES THE POTENTIAL FOR CONTAMINATED STORM RUNOFF. SPECIFIC STEPS ARE TO INCLUDE THE FOLLOWING:

- PRIOR TO CONSTRUCTION DEVELOP A STORMWATER POLLUTION PREVENTION PLAN (SWPPP), WHICH UTILIZES THE BEST MANAGEMENT PRACTICES (BMPS) AND IS IN COMPLIANCE WITH THE NATIONAL POLLUTANT DISCHARGE ELIMINATION SYSTEM (NPDES) AND THE ALASKA CONSTRUCTION GENERAL PERMIT NO. AKR10000. THIS PLAN MUST BE APPROVED BY THE STATE OF ALASKA ADEC.
- FILE A NOTICE OF INTENT (NOI) WITH THE EPA A MINIMUM OF 7-DAYS PRIOR TO THE START OF CONSTRUCTION.
- CONSTRUCTOR SHALL BE VIGILANT WITH IMPLEMENTATION OF THE PLAN.

IMPACT AVOIDANCE

ALL WORK WILL BE CONDUCTED PRIOR TO MAY 5 OR AFTER JULY 25 OF EACH YEAR, AND IF ANY CONSTRUCTION MUST OCCUR WITHIN THIS TIME PERIOD, THE CREW WILL BE TRAINED TO RECOGNIZE THE SPECTACLED EIDER AND ITS NEST. WORK WILL STOP AFTER JULY 15 IF AN EIDER NEST IS OBSERVED. WORK MAY CONTINUE BETWEEN APRIL 15 AND JULY 15 IN AREAS WHERE ALL STANDING VEGETATION HAS BEEN REMOVED, OR THE GROUND HAS BEEN DISTURBED PRIOR TO APRIL 15, AS SPECTACLED EIDERS ARE UNLIKELY TO SELECT NEST SITES IN PREVIOUSLY DENUDED AREAS.

RECORD DRAWING CERTIFICATE
THESE DRAWINGS REFLECT RECORDED INFORMATION OBTAINED DURING CONSTRUCTION. INFORMATION PROVIDED HEREIN IS ACCURATE TO THE BEST OF MY KNOWLEDGE.
NAME: DATE

SCALE: AS SHOWN

CONSTRUCTION RECORD
FIELD BOOK
STAKING
FOREMAN
AS-BUILT
INSPECTOR

STATE OF ALASKA — 49TH — Michael R. Eckman No.6552 — REGISTERED PROFESSIONAL ENGINEER

FACULTATIVE LAGOON

LEGEND AND WORK SUMMARY

CHEFORNAK, ALASKA

CE2 ENGINEERS, INC.
PO BOX 223048 ANCHORAGE, AK 99503 PH: 907-349-9193 FAX: 907-349-9215

REVISION	BY	DATE
REVISED PER 65% COMMENTS	CM	1/20/14

Project No. ___
Date JAN 2014
Designed LAP
Drawn DDR
Approved LAP

Sheet No. G1.1

G:\ACAD\CHEFORNAK\CYF1101 Sewage Lagoon\G1.1PROJECT DESCRIPTION LEGEND.dwg, 2/28/2014 3:46:19 PM, cmerz, \\Ce2main\LANIER MP C2050/LD520C PCL 6

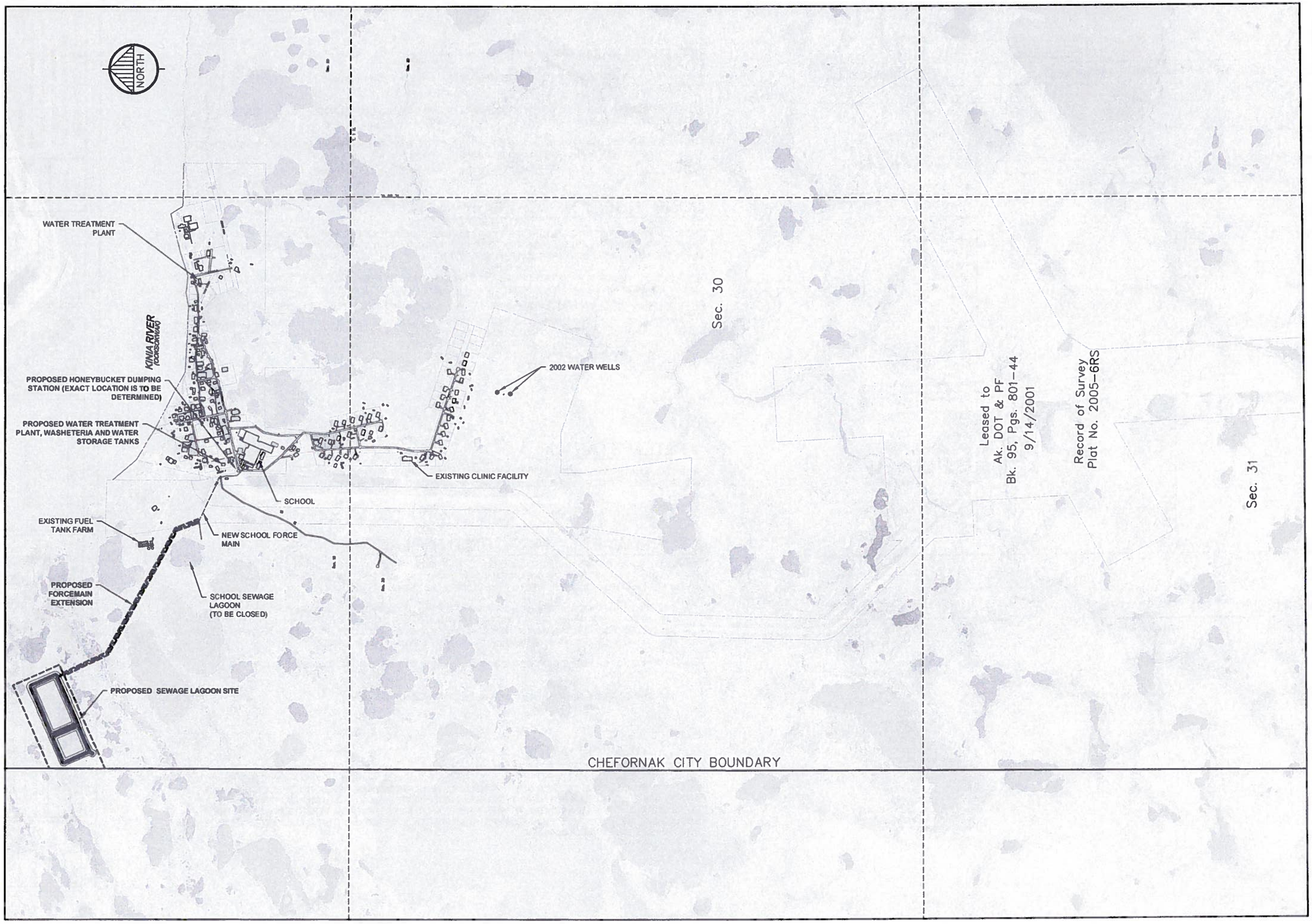

RECORD DRAWING CERTIFICATE

THESE DRAWINGS REFLECT RECORDED INFORMATION OBTAINED DURING CONSTRUCTION. INFORMATION PROVIDED HEREIN IS ACCURATE TO THE BEST OF MY KNOWLEDGE.

NAME _____ DATE _____

SCALE: AS SHOWN

BAR IS ONE INCH ON ORIGINAL DRAWING

0 1

IF NOT ONE INCH ON THIS SHEET, ADJUST SCALES ACCORDINGLY

CONSTRUCTION RECORD

FIELD BOOK

STAKING

FOREMAN

AS-BUILT

INSPECTOR

STATE OF ALASKA
49TH
Michael R. Erickson
No. 8352
REGISTERED PROFESSIONAL ENGINEER

FACULTATIVE LAGOON

VICINITY MAP

CHEFORNAK, ALASKA

CE2 ENGINEERS, INC.
PO BOX 220649 ANCHORAGE, AK 99503 PH: 907-349-1015 FAX: 907-349-1015

REVISION	BY	DATE
REVISED PER 65% COMMENTS	CM	1/29/14

Project No. _____
Date JAN. 2014
Designed MRE
Drawn CM
Approved MRE

Sheet No
G1.2

G:\ACAD\CHEFORNAK\CYF1101 Sewage Lagoon\G1.2 VICINITY MAP.dwg, 2/26/2014 2:40:55 PM, cmerz, \\Ce2main\LANIER NP C2050\LD520C PCL 6

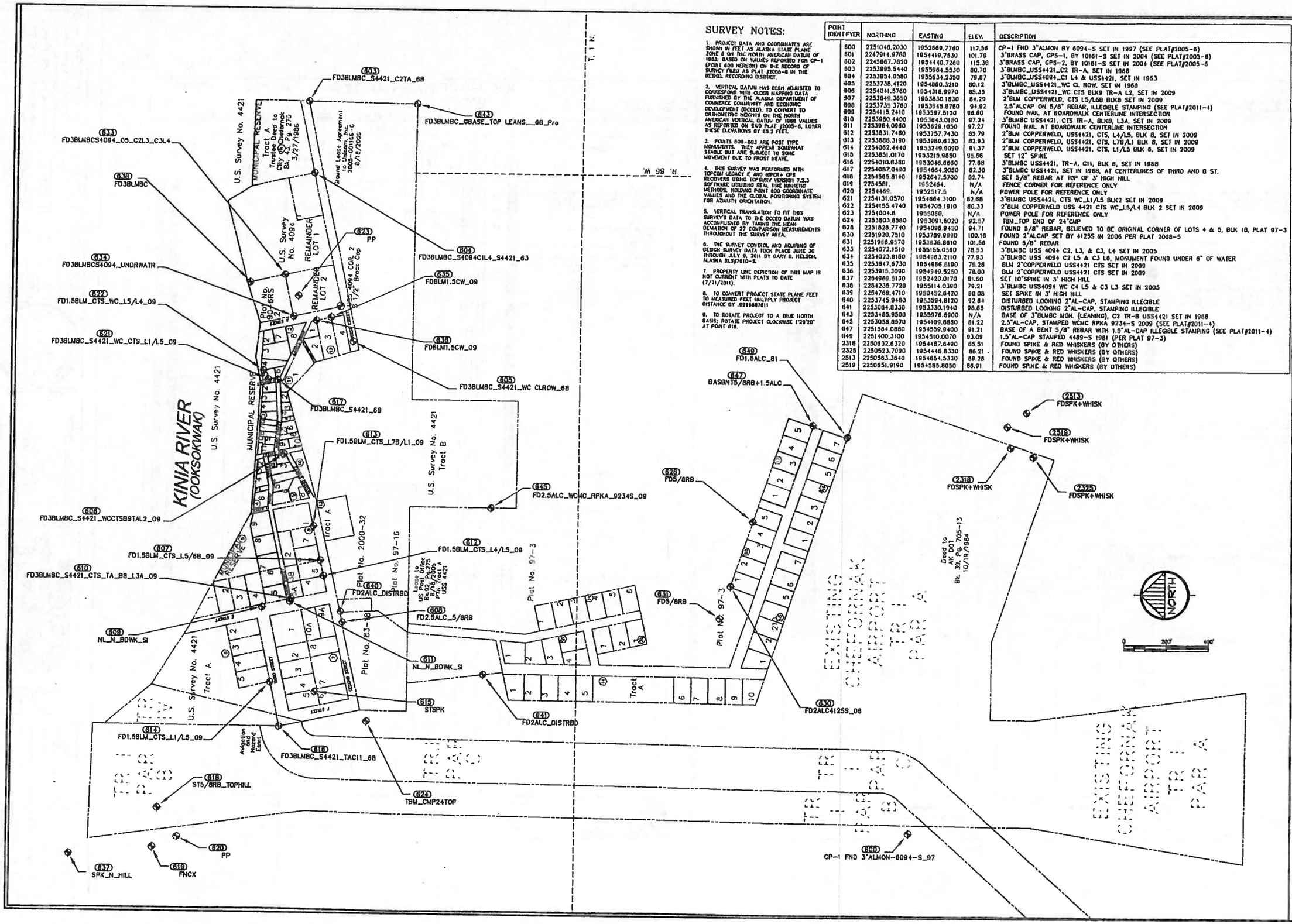

SURVEY NOTES:

1. PROJECT DATA AND COORDINATES ARE SHOWN IN FEET AS ALASKA STATE PLANE ZONE 6 ON THE NORTH AMERICAN DATUM OF 1983; BASED ON VALUES REPORTED FOR CP-1 (POINT 600 HEREON) ON THE RECORD OF SURVEY FILED AS PLAT #2005-6 IN THE BETHEL RECORDING DISTRICT.

2. VERTICAL DATUM HAS BEEN ADJUSTED TO CORRESPOND WITH OLDER MAPPING DATA FURNISHED BY THE ALASKA DEPARTMENT OF COMMERCE COMMUNITY AND ECONOMIC DEVELOPMENT (DCCED). TO CONVERT TO ORTHOMETRIC HEIGHTS ON THE NORTH AMERICAN VERTICAL DATUM OF 1988 VALUES AS REPORTED ON SAID PLAT #2005-6, LOWER THESE ELEVATIONS BY 85.2 FEET.

3. POINTS 600-603 ARE POST TYPE MONUMENTS. THEY APPEAR SQUEEZED STABLE BUT ARE SUBJECT TO SOME MOVEMENT DUE TO FROST HEAVE.

4. THIS SURVEY WAS PERFORMED WITH TOPCON LEGACY E AND HIPER+ GPS RECEIVERS USING TOPSURV VERSION 7.2.3 SOFTWARE UTILIZING REAL TIME KINEMATIC METHODS, HOLDING POINT 600 COORDINATE VALUES AND THE GLOBAL POSITIONING SYSTEM FOR AZIMUTH ORIENTATION.

5. VERTICAL TRANSLATION TO FIT THIS SURVEY'S DATA TO THE DCCED DATUM WAS ACCOMPLISHED BY TAKING THE MEAN DEVIATION OF 27 COMPARISON MEASUREMENTS THROUGHOUT THE SURVEY AREA.

6. THE SURVEY CONTROL AND AQUIRING OF DESIGN SURVEY DATA TOOK PLACE JUNE 30 THROUGH JULY 9, 2011 BY GARY D. NELSON, ALASKA RLS#7610-S.

7. PROPERTY LINE DEPICTION OF THIS MAP IS NOT CURRENT WITH PLATS TO DATE (7/21/2011).

8. TO CONVERT PROJECT STATE PLANE FEET TO MEASURED FEET MULTIPLY PROJECT DISTANCE BY .999968761l

9. TO ROTATE PROJECT TO A TRUE NORTH BASIS; ROTATE PROJECT CLOCKWISE 1°29'20" AT POINT 616.

POINT IDENTIFYER	NORTHING	EASTING	ELEV.	DESCRIPTION
600	2251046.2030	1952669.7760	112.56	CP-1 FND 3"ALMON BY 6094-S SET IN 1997 (SEE PLAT#2005-6)
601	2247914.9780	1954419.7530	101.79	3"BRASS CAP, GPS-1, BY 10161-S SET IN 2004 (SEE PLAT#2005-6)
602	2245867.7820	1954440.7260	115.38	3"BRASS CAP, GPS-2, BY 10161-S SET IN 2004 (SEE PLAT#2005-6
603	2253995.5440	1955984.5530	80.70	3"BLMBC_USS4421_C2 TR-A, SET IN 1968
604	2253954.0380	1955634.2350	79.87	3"BLMBC_USS4094_C1 L4 & USS4421, SET IN 1953
605	2253738.4120	1954860.3210	80.12	3"BLMBC_USS4421_WC CL ROW, SET IN 1968
606	2254041.5760	1954318.9970	85.35	3"BLMBC_USS4421_WC CTS BLK9 TR-A L2, SET IN 2009
607	2253849.3650	1953830.1830	84.29	2"BLM COPPERWELD, CTS L5/L6B BLK8 SET IN 2009
608	2253739.3780	1953545.8780	94.92	2.5"ALCAP ON 5/8" REBAR, ILLEGIBLE STAMPING (SEE PLAT#2011-4)
609	2254115.2410	1953597.5120	96.80	FOUND NAIL AT BOARDWALK CENTERLINE INTERSECTION
610	2253980.4400	1953643.0180	97.24	3"BLMBC USS4421, CTS TR-A, BLK8, L3A, SET IN 2009
611	2253984.0960	1953629.1050	97.27	FOUND NAIL AT BOARDWALK CENTERLINE INTERSECTION
612	2253831.7480	1953757.7430	85.79	2"BLM COPPERWELD, USS4421, CTS, L4/L5, BLK 8, SET IN 2009
613	2253888.3190	1953989.6230	82.93	2"BLM COPPERWELD, USS4421, CTS, L7B/L1 BLK 8, SET IN 2009
614	2254062.4440	1953249.9090	91.37	2"BLM COPPERWELD, USS4421, CTS, L1/L5 BLK 6, SET IN 2009
615	2253851.0170	1953215.9850	95.66	SET 12" SPIKE
616	2254010.6380	1953046.6660	77.68	3"BLMBC USS4421, TR-A, C11, BLK 6, SET IN 1968
617	2254087.0490	1954664.2080	82.30	3"BLMBC USS4421, SET IN 1968, AT CENTERLINES OF THIRD AND B ST.
618	2254565.8140	1952647.5700	82.74	SET 5/8" REBAR AT TOP OF 3' HIGH HILL
619	2254581.	1952464.	N/A	FENCE CORNER FOR REFERENCE ONLY
620	2254469.	1952517.5	N/A	POWER POLE FOR REFERENCE ONLY
621	2254131.0570	1954664.3100	82.66	3"BLMBC USS4421, CTS WC_L1/L5 BLK2 SET IN 2009
622	2254155.4740	1954705.1910	80.33	2"BLM COPPERWELD USS 4421 CTS WC_L5/L4 BLK 2 SET IN 2009
623	2254004.6	1955080.	N/A	POWER POLE FOR REFERENCE ONLY
624	2253803.8560	1953091.6020	92.57	TBM_TOP END OF 24"CMP
628	2251828.7740	1954096.9420	94.71	FOUND 5/8" REBAR, BELIEVED TO BE ORIGINAL CORNER OF LOTS 4 & 5, BLK 18, PLAT 97-3
630	2251920.7510	1953789.9980	100.16	FOUND 2"ALCAP SET BY 4125S IN 2006 PER PLAT 2006-5
631	2251966.9570	1953636.8610	101.56	FOUND 5/8" REBAR
633	2254072.1510	1955155.0590	78.53	3"BLMBC USS 4094 C2, L3, & C3, L4 SET IN 2005
634	2254023.8160	1954963.2110	77.93	3"BLMBC USS 4094 C2 L5 & C3 L6, MONUMENT FOUND UNDER 6" OF WATER
635	2253847.6730	1954966.8190	78.28	BLM 2"COPPERWELD USS4421 CTS SET IN 2009
636	2253915.3090	1954949.5250	78.00	BLM 2"COPPERWELD USS4421 CTS SET IN 2009
637	2254069.5130	1952420.0170	81.60	SET 10"SPIKE IN 3' HIGH HILL
638	2254235.7720	1955114.0390	79.21	3"BLMBC USS4094 WC C4 L5 & C3 L3 SET IN 2005
639	2254769.4710	1950452.8420	80.08	SET SPIKE IN 3' HIGH HILL
640	2253745.9480	1953594.8120	92.64	DISTURBED LOOKING 2"AL-CAP, STAMPING ILLEGIBLE
641	2253064.8330	1953330.1940	98.85	DISTURBED LOOKING 2"AL-CAP, STAMPING ILLEGIBLE
643	2253485.9500	1955976.6900	N/A	BASE OF 3"BLMBC MON. (LEANING), C2 TR-B USS4421 SET IN 1968
645	2253058.8570	1954109.8880	81.22	2.5"AL-CAP, STAMPED WCWC RPKA 9234-S 2009 (SEE PLAT#2011-4)
647	2251564.0880	1954539.9400	91.21	BASE OF A BENT 5/8" REBAR WITH 1.5"AL-CAP ILLEGIBLE STAMPING (SEE PLAT#2011-4)
649	2251400.3100	1954510.0070	93.09	1.5"AL-CAP STAMPED 4489-S 1981 (PER PLAT 97-3)
2318	2250632.6320	1954487.6490	85.51	FOUND SPIKE & RED WHISKERS (BY OTHERS)
2325	2250523.7090	1954446.8330	86.21	FOUND SPIKE & RED WHISKERS (BY OTHERS)
2513	2250563.3640	1954654.5330	89.28	FOUND SPIKE & RED WHISKERS (BY OTHERS)
2519	2250651.9190	1954585.8050	88.91	FOUND SPIKE & RED WHISKERS (BY OTHERS)

RECORD DRAWING CERTIFICATE
THESE DRAWINGS REFLECT RECORDED INFORMATION OBTAINED DURING CONSTRUCTION. INFORMATION PROVIDED HEREIN IS ACCURATE TO THE BEST OF MY KNOWLEDGE.
NAME DATE

SCALE: AS SHOWN
BAR IS ONE INCH ON ORIGINAL DRAWING
0 1"
IF NOT ONE INCH ON THIS SHEET, ADJUST SCALES ACCORDINGLY

CONSTRUCTION RECORD
FIELD BOOK
STAKING
FORMAN
AS-BUILT
INSPECTOR

STATE OF ALASKA 49TH Gary D. Nelson LS 7610 6-5-11

SURVEY CONTROL
CHEFORNAK, ALASKA

CE2 ENGINEERS, INC.
PO BOX 223594 ANCHORAGE, AK 99522 PH: 907-563-5313 FAX: 907-563-5315

REVISION	BY	DATE

Project No.
Date
Designed
Drawn CM
Approved GN

Sheet No.
G2.1

G:\ACAD\CHEFORNAK\CYF1101 Sewage Lagoon\G2.1 SURVEY CONTROL.dwg, 2/26/2014 2:42:41 PM, cmerz, \\Ce2main\LANIER MP C2050/LD520C PCL 6

RECORD OF BOREHOLE TP-1

SHEET 1 of 1

PROJECT: CE2 Chefornak Lagoon
PROJECT NUMBER: 113-95619
LOCATION: Chefornak, AK

CLIENT: CE2
DRILLING DATE: 4/1/2011
EQUIPMENT: Excavator- Hitachi EX 300

DATUM: WGS 84
ELEVATION: n/a
COORDS: 60.16167° N 164.29778° W

DEPTH (ft)	BORING METHOD	DESCRIPTION	USCS	ELEV. DEPTH (ft)	SAMPLE NUMBER	TYPE	BLOWS PER FT	REC ATT (inch)	UNCORRECTED BLOWS / FT	SALINITY (ppt) Δ / WATER CONTENT (PERCENT)	NOTES TESTS WATER LEVELS GRAPHIC
0	Bucket	0.0 - 2.0 Frozen, light brown, fibrous PEAT, well bonded with approximately 40-50% visible ice by volume as individual ice crystals (PT Vx)	PT		1	GS		6/6	149		
		2.0 - 3.0 Frozen, brown, ORGANIC SILT, well bonded with approximately 5-10% visible ice by volume as coatings on particles (OL Vc)	OL	2.0							
		3.0 - 8.0 Frozen, gray, SILT, well bonded with approximately 5-10% visible ice by volume, grading to poorly bonded with no visible ice, trace organic material (ML Vc to Nf)	ML	3.0	2	GS		6/6	24		
5					3	GS		6/6			Backfilled with excavated materials
		8.0 - 12.0 Dark gray to gray, SILT, low plasticity, trace organic material (ML)	ML	8.0	4	GS		6/6	57		Gravel = 0%, Sand = 4%, P200 = 95.9%
10		12.0 - 15.0 Frozen, dark gray, SILT, poorly bonded friable (ML Nf)	ML	12.0	5	GS		6/6			
					6	GS		6/6			
15		Borehole completed at 15.0 ft									
20											

Notes:

1) Test pit backfilled with excavated materials
2) No groundwater observed

Golder Associates

DEPTH SCALE: 1 inch to 2.5 feet
DRILLING CONTRACTOR: CE2
DRILLER: Evan

LOGGED: J. Randazzo
CHECKED: D. Willman
CHECK DATE: 5/17/2011

Figure 4

RECORD OF BOREHOLE TP-2

SHEET 1 of 1

PROJECT: CE2 Chefornak Lagoon
PROJECT NUMBER: 113-95619
LOCATION: Chefornak, AK

CLIENT: CE2
DRILLING DATE: 4/1/2011
EQUIPMENT: Excavator- Hitachi EX 300

DATUM: WGS 84
ELEVATION: n/a
COORDS: 60.16253° N 164.29778° W

DEPTH (ft)	BORING METHOD	DESCRIPTION	USCS	ELEV. DEPTH (ft)	SAMPLE NUMBER	TYPE	BLOWS PER FT	REC ATT (inch)	UNCORRECTED BLOWS / FT	SALINITY (ppt) Δ / WATER CONTENT (PERCENT)	NOTES TESTS WATER LEVELS GRAPHIC
0	Bucket	0.0 - 1.0 Frozen, light brown, fibrous PEAT, well bonded with approximately 40-50% visible ice by volume as individual ice crystals (PT, Vx)	PT								
		1.0 - 2.0 Frozen, brown, ORGANIC SILT, well bonded no excess ice (OL, Nbn)	OL	1.0	1	GS		6/6	100		
		2.0 - 13.0 Frozen, gray, SILT, well bonded to 9.5 feet, approximately 10-15% visible ice by volume as coatings on particles, some organic material (ML, Vc to Nf)	ML	2.0	2	GS		6/6	32		1 inch PVC
5											
10		Poorly bonded at 9.5 feet			3	GS		6/6	64		
15		Borehole completed at 13.0 ft.									
20											

Notes:

1) Test pit backfilled with excavated materials
2) Closed-end 1 inch schedule 80 PVC installed to 13 feet, with 2 feet of stickup above grade
3) No groundwater observed

Golder Associates

DEPTH SCALE: 1 inch to 2.5 feet
DRILLING CONTRACTOR: CE2
DRILLER: Evan

LOGGED: J. Randazzo
CHECKED: D. Willman
CHECK DATE: 5/17/2011

Figure 5

RECORD DRAWING CERTIFICATE
THESE DRAWINGS REFLECT RECORDED INFORMATION OBTAINED DURING CONSTRUCTION. INFORMATION PROVIDED HEREIN IS ACCURATE TO THE BEST OF MY KNOWLEDGE.
NAME / DATE

SCALE:
BAR IS ONE INCH ON ORIGINAL DRAWING
IF NOT ONE INCH ON THIS SHEET, ADJUST SCALE ACCORDINGLY

CONSTRUCTION RECORD
FIELD BOOK
STAKING
FOREMAN
AS-BUILT
INSPECTOR

FACULTATIVE LAGOON
TEST HOLE BORING LOGS
CHEFORNAK, ALASKA

CE2 ENGINEERS, INC.
PO BOX 230948 ANCHORAGE, AK 99523 PH: 907-349-3175 FAX: 907-349-3175

REVISION	BY	DATE
REVISED PER 65% COMMENTS	CM	1/28/14

Project No. ____ Date JAN. 2014
Designed MRE
Drawn CM
Approved MRE

Sheet No. G3.1

G:\ACAD\CHEFORNAK\CYF1101 Sewage Lagoon\G3.1 TO G3.2.dwg, 2/26/2014 2:44:21 PM, cmerz, \\Ce2main\LANIER MP C2050\LDS20C PCL 6

CE2 CHEFORNAK LAGOON.GPJ LIBRARY-ANC(7-13-11).GLB [ANC BOREHOLE] DFreese 7/19/11

RECORD OF BOREHOLE TP-3

SHEET 1 of 1

PROJECT: CE2 Chefornak Lagoon
PROJECT NUMBER: 113-95619
LOCATION: Chefornak, AK

CLIENT: CE2
DRILLING DATE: 4/2/2011
EQUIPMENT: Excavator- Hitachi EX 300

DATUM: WGS 84
ELEVATION: n/a
COORDS: 60.16222° N 164.29689° W

DEPTH (ft)	BORING METHOD	DESCRIPTION	USCS	ELEV. / DEPTH (ft)	SAMPLE NUMBER	TYPE	BLOWS PER FT	REC / ATT (inch)	UNCORRECTED BLOWS / FT	SALINITY (ppt) / WATER CONTENT (PERCENT)	NOTES TESTS WATER LEVELS GRAPHIC
0	Bucket	0.0 - 1.0 Frozen, light brown, fibrous PEAT well bonded with approximately 40-50% visible ice by volume as individual ice crystals (PT, Vx)	PT								
		1.0 - 3.0 Frozen, brown, ORGANIC SILT, well bonded with approximately 5-10% visible ice by volume as coatings on particles (OL, Vc)	OL	1.0	1	GS		6/6		648	
5		3.0 - 6.0 Dark gray, SILT, well bonded becoming friable below 5 feet, approximately 10% visible ice by volume (ML, Vc to Nbn)	ML	3.0	2	GS		6/6		64	
		6.0 - 8.0 Moist, dark gray, elastic SILT, medium plasticity (MH)	MH	6.0	3	GS		6/6		300	1 inch PVC
10		8.0 - 16.0 Gray, SILT, trace sand layers observed below 15 feet (ML)	ML	8.0	4	GS		6/6			Gravel = 0%, Sand = 6%, WD P200 = 93.7%
15					5	GS		6/6			
20		Borehole completed at 16.0 ft.									

Notes:
1) Test pit backfilled with excavated materials
2) Groundwater seepage observed at 10 feet during excavation
3) Closed-end 1 inch schedule 80 PVC installed to 15 feet, with 5 feet of stick up above grade

Golder Associates

DEPTH SCALE: 1 inch to 2.5 feet
DRILLING CONTRACTOR: CE2
DRILLER: Evan

LOGGED: J. Randazzo
CHECKED: D. Willman
CHECK DATE: 5/17/2011

Figure 6

RECORD OF BOREHOLE TP-4

SHEET 1 of 1

PROJECT: CE2 Chefornak Lagoon
PROJECT NUMBER: 113-95619
LOCATION: Chefornak, AK

CLIENT: CE2
DRILLING DATE: 4/2/2011
EQUIPMENT: Excavator- Hitachi EX 300

DATUM: WGS 84
ELEVATION: n/a
COORDS: 60.16314° N 164.29600° W

DEPTH (ft)	BORING METHOD	DESCRIPTION	USCS	ELEV. / DEPTH (ft)	SAMPLE NUMBER	TYPE	BLOWS PER FT	REC / ATT (inch)	UNCORRECTED BLOWS / FT	SALINITY (ppt) / WATER CONTENT (PERCENT)	NOTES TESTS WATER LEVELS GRAPHIC
0	Bucket	0.0 - 1.0 Frozen, brown, fibrous PEAT, well bonded no excess ice (PT, Nbn)	PT								
		1.0 - 2.0 Frozen, brown, ORGANIC SILT, well bonded no excess ice (OL, Nbn)	OL	1.0	1	GS		6/6		222	
		2.0 - 5.0 Frozen, gray, SILT, well bonded to 4 feet, poorly bonded 4-5 feet, no visible ice, trace organic material (ML, Nbn)	ML	2.0	2	GS		6/6		73	Backfilled with excavated materials
5		5.0 - 7.0 Moist, black, ORGANIC SILT, mixed with peat (OL)	OL	5.0	3	GS		6/6		74	
		7.0 - 9.0 Moist, gray, SILT (ML)	ML	7.0							
10		9.0 - 18.0 Gray, SILT, few fine sand grading to sandy SILT, sand is fine (ML)	ML	9.0	4	GS		6/6			Gravel = 0%, Sand = 10%, P200 = 89.7%, MA
15					5	GS		6/6			Gravel = 0%, Sand = 33%, P200 = 66.7%
20		Borehole completed at 18.0 ft.									

Notes:
1) Test pit backfilled with excavated materials
2) No groundwater observed

Golder Associates

DEPTH SCALE: 1 inch to 2.5 feet
DRILLING CONTRACTOR: CE2
DRILLER: Evan

LOGGED: J. Randazzo
CHECKED: D. Willman
CHECK DATE: 5/17/2011

Figure 7

RECORD DRAWING CERTIFICATE
THESE DRAWINGS REFLECT RECORDED INFORMATION OBTAINED DURING CONSTRUCTION. INFORMATION PROVIDED HEREIN IS ACCURATE TO THE BEST OF MY KNOWLEDGE.
NAME DATE

SCALE:
BAR IS ONE INCH ON ORIGINAL DRAWING
IF NOT ONE INCH ON THIS SHEET, ADJUST SCALE ACCORDINGLY

CONSTRUCTION RECORD
FIELD BOOK
STAKING
FOREMAN
AS-BUILT
INSPECTOR

STATE OF ALASKA — Michael R. Eastman No.6252 — REGISTERED PROFESSIONAL ENGINEER

FACULTATIVE LAGOON
TEST HOLE BORING LOGS
CHEFORNAK, ALASKA

CE2 ENGINEERS, INC.
PO BOX 232089 ANCHORAGE, AK 99523 PH: 907-349-0103 FAX: 907-349-0105

REVISION	BY	DATE
REVISED PER GDS COMMENTS	CM	1/8/14

Project No. ____ Date JAN. 2014
Designed MRE
Drawn CM
Approved MRE

Sheet No.
G3.2

G:\ACAD\CHEFORNAK\CYF1101 Sewage Lagoon\G3.1 TO G3.2.dwg, 2/26/2014 2:44:33 PM, cmerz, \\Ce2main\LANIER MP C2050/LD520C PCL 6
CE2 CHEFORNAK LAGOON.GPJ LIBRARY-ANC(7-13-11).GLB [ANC BOREHOLE] DFreese 7/19/11

RECORD OF BOREHOLE TP-5

SHEET 1 of 1

PROJECT: CE2 Chefornak Lagoon
PROJECT NUMBER: 113-96619
LOCATION: Chefornak, AK

CLIENT: CE2
DRILLING DATE: 4/2/2011
EQUIPMENT: Excavator - Hitachi EX 300

DATUM: WGS 84
ELEVATION: n/a
COORDS: 60.16231° N 164.29428° W

DEPTH (ft)	BORING METHOD	SOIL PROFILE – DESCRIPTION	ICE BOND	USCS	GRAPHIC LOG	ELEV. / DEPTH (ft)	SAMPLES – NUMBER	TYPE	BLOWS PER FT	REC / ATT (inch)	UNCORRECTED BLOWS / FT ■ (10 20 30 40)	SALINITY (ppt) △ / WATER CONTENT (PERCENT) W_p ⊢—⊖—⊣ W_l (10 20 30 40)	NOTES / TESTS / WATER LEVELS / GRAPHIC
0		0.0 - 1.0 Frozen, brown, fibrous PEAT, well bonded no excess ice (PT, Nbn)		PT									
		1.0 - 2.0 Frozen, brown, ORGANIC SILT, well bonded no excess ice (OL, Nbn)		OL		1.0	1	GS		8/8	△	114 ○	
		2.0 - 9.0 Frozen, gray to dark gray SILT well bonded, approximately 5 10% visible ice by volume, trace organic material (ML, Vc to Nl)		ML		2.0							
5		Poorly bonded at 7 feet					2	GS		8/8	△	71 ○	Gravel = 0%, Sand = 10%, P200 = 90.0%
	Bucket	9.0 - 18.0 Wet, gray to dark gray sandy SILT, fine-grained sand, sand content increasing with depth (ML)				9.0							1 inch PVC
10				ML			3	GS		8/8		○	
15							4	GS		6/6		○	Gravel = 0%, Sand = 33%, P200 = 66.9%
		Borehole completed at 18.0 ft.											
20													

Notes:
1) Test pit backfilled with excavated materials
2) Closed-end 1 inch schedule 80 PVC installed to 18 feet, with 2 feet of stickup above grade
3) No groundwater observed

Golder Associates

DEPTH SCALE: 1 inch to 2.5 feet
DRILLING CONTRACTOR: CE2
DRILLER: Evan

LOGGED: J. Randazzo
CHECKED: D. Willman
CHECK DATE: 5/17/2011

Figure 8

RECORD OF BOREHOLE TP-6

SHEET 1 of 1

PROJECT: CE2 Chefornak Lagoon
PROJECT NUMBER: 113-96619
LOCATION: Chefornak, AK

CLIENT: CE2
DRILLING DATE: 4/2/2011
EQUIPMENT: Excavator - Hitachi EX 300

DATUM: WGS 84
ELEVATION: n/a
COORDS: 60.16135° N 164.29281° W

DEPTH (ft)	BORING METHOD	SOIL PROFILE – DESCRIPTION	ICE BOND	USCS	GRAPHIC LOG	ELEV. / DEPTH (ft)	SAMPLES – NUMBER	TYPE	BLOWS PER FT	REC / ATT (inch)	UNCORRECTED BLOWS / FT ■ (10 20 30 40)	SALINITY (ppt) △ / WATER CONTENT (PERCENT) W_p ⊢—⊖—⊣ W_l (10 20 30 40)	NOTES / TESTS / WATER LEVELS / GRAPHIC
0		0.0 - 0.5 Frozen, black, fibrous PEAT, well bonded no excess ice (PT, Nbn)		PT									
		0.5 - 1.5 Frozen, black, ORGANIC SILT, well bonded no excess ice (OL, Nbn)		OL		0.5							Backfilled with excavated materials
	Bucket	1.5 - 3.0 Wet, black, ORGANIC SILT (OL)		OL		1.5	1	GS		8/8	△	110 ○	
		3.0 - 5.0 Wet, black, SILT, trace sand (ML)		ML		3.0	2	GS		8/8	△	188 ○	3 ft WD
5		Borehole completed at 5.0 ft.											
10													
15													
20													

Notes:
1) Test pit backfilled with excavated materials
2) Test pit excavated in potential drainage channel
3) Groundwater observed at 3 feet while excavating

Golder Associates

DEPTH SCALE: 1 inch to 2.5 feet
DRILLING CONTRACTOR: CE2
DRILLER: Evan

LOGGED: J. Randazzo
CHECKED: D. Willman
CHECK DATE: 5/17/2011

Figure 9

RECORD DRAWING CERTIFICATE
THESE DRAWINGS REFLECT RECORDED INFORMATION OBTAINED DURING CONSTRUCTION. INFORMATION PROVIDED HEREIN IS ACCURATE TO THE BEST OF MY KNOWLEDGE.
NAME
DATE

SCALE:

CONSTRUCTION RECORD
FIELD BOOK
STAKING
FOREMAN
AS-BUILT
INSPECTOR

STATE OF ALASKA
Michael R. Eatman
No. 49 TH
REGISTERED PROFESSIONAL ENGINEER

2-27-2014

FACULTATIVE LAGOON

TEST HOLE BORING LOGS

CHEFORNAK, ALASKA

CE2 ENGINEERS, INC.
PO BOX 230968 ANCHORAGE, AK 99523 PH: 907-345-6515 FAX: 907-345-1015

REVISION	BY	DATE
REVISED PER 95% COMMENTS	CM	12/2/14

Project No. 113-96619
Date JAN 2014
Designed MRE
Drawn CM
Approved MRE

Sheet No. G3.3

G:\ACAD\CHEFORNAK\CYF1101 Sewage Lagoon\G3.1 TO G3.2.dwg, 2/26/2014 2:44:40 PM, cmerz, \\Ce2main\LANTER MP C2050/LD520C PCL 6

CE2 CHEFORNAK LAGOON.GPJ LIBRARY-ANC(7-13-11).GLB [ANC BOREHOLE] DFreese 7/19/11

RECORD OF BOREHOLE TP-7

SHEET 1 of 1

PROJECT: CE2 Chefornak Lagoon
PROJECT NUMBER: 113-95619
LOCATION: Chefornak, AK

CLIENT: CE2
DRILLING DATE: 4/2/2011
EQUIPMENT: Excavator- Hitachi EX 300

DATUM: WGS 84
ELEVATION: n/a
COORDS: 60.16069° N 164.29033° W

BORING METHOD: Bucket

DEPTH (ft)	SOIL PROFILE DESCRIPTION	ICE BOND	USCS	GRAPHIC LOG	ELEV. DEPTH (ft)	SAMPLE NUMBER	TYPE	BLOWS PER FT	REC ATT (inch)	UNCORRECTED BLOWS / FT (10 20 30 40)	SALINITY (ppt) Δ / WATER CONTENT (PERCENT) w_p ⊢ w ⊣ w_l (10 20 30 40)	NOTES TESTS WATER LEVELS GRAPHIC
0	0.0 - 1.5 Frozen, brown, fibrous PEAT, well bonded no excess ice (PT, Nbn)		PT									
						1	GS		6/6		93	
	1.5 - 10.0 Frozen, gray, SILT, well bonded, no visible ice, trace fibrous organic material (ML, Nbn to Nf)				1.5							
						2	GS		6/6	Δ	80	
5			ML									1 inch PVC
	Poorly bonded at 8 feet, trace sand					3	GS		6/6	Δ	85	
10	Borehole completed at 10.0 ft.											
15												
20												

Notes:

1) Test pit backfilled with excavated materials
2) Closed-end 1 inch schedule 80 PVC installed to 10 feet, with 1.5 feet of stickup above grade
3) No groundwater observed

Golder Associates

DEPTH SCALE: 1 inch to 2.5 feet
DRILLING CONTRACTOR: CE2
DRILLER: Evan

LOGGED: J. Randazzo
CHECKED: D. Willman
CHECK DATE: 5/17/2011

Figure 10

CE2 CHEFORNAK LAGOON.GPJ LIBRARY-ANC(7-13-11).GLB [ANC BOREHOLE] DFreese 7/19/11

RECORD OF BOREHOLE TP-8

SHEET 1 of 1

PROJECT: CE2 Chefornak Lagoon
PROJECT NUMBER: 113-95619
LOCATION: Chefornak, AK

CLIENT: CE2
DRILLING DATE: 4/3/2011
EQUIPMENT: Excavator- Hitachi EX 300

DATUM: WGS 84
ELEVATION: n/a
COORDS: 60.16025° N 164.28892° W

BORING METHOD: Bucket

DEPTH (ft)	SOIL PROFILE DESCRIPTION	ICE BOND	USCS	GRAPHIC LOG	ELEV. DEPTH (ft)	SAMPLE NUMBER	TYPE	BLOWS PER FT	REC ATT (inch)	UNCORRECTED BLOWS / FT (10 20 30 40)	SALINITY (ppt) Δ / WATER CONTENT (PERCENT) w_p ⊢ w ⊣ w_l (10 20 30 40)	NOTES TESTS WATER LEVELS GRAPHIC
0	0.0 - 0.5 Frozen, brown, fibrous PEAT, well bonded no excess ice (PT, Nbn)		PT		0.5							
	0.5 - 1.5 Frozen, brown, ORGANIC SILT, well bonded with approximately 5% visible ice by volume as coatings on particles (OL, Vc)		OL			1	GS		6/6		18	
	1.5 - 3.5 Frozen, gray, SILT, trace sand, well bonded with approximately 5-10% visible ice by volume as coatings on particles (ML, Vc)		ML		1.5	2	GS		6/6	Δ	6	
	3.5 - 5.0 Frozen, dark gray, ORGANIC SILT to SILT with organics, interbedded fibrous peat, poorly bonded with no visible ice (OL to ML, Nf)		OL		3.5							
5	5.0 - 7.0 Moist, black, SILT, trace to few fine-grained sand, nonplastic (ML)		ML		5.0	3	GS		6/6		10	
	7.0 - 15.5 Moist, gray, SILT, low plasticity, trace sand (ML)				7.0	4	GS		6/6			Gravel = 0%, Sand = 11%, P200 = 88.6%, MA
10			ML									1 inch PVC
						5	GS		6/6	Δ	H O	
15	Borehole completed at 15.5 ft.											
20												

Notes:

1) Test pit backfilled with excavated materials
2) Closed-end 1 inch schedule 80 PVC installed to 15.5 feet, with 4.5 feet of stickup above grade
3) No groundwater observed

Golder Associates

DEPTH SCALE: 1 inch to 2.5 feet
DRILLING CONTRACTOR: CE2
DRILLER: Evan

LOGGED: J. Randazzo
CHECKED: D. Willman
CHECK DATE: 6/17/2011

Figure 11

CE2 CHEFORNAK LAGOON.GPJ LIBRARY-ANC(7-13-11).GLB [ANC BOREHOLE] DFreese 7/19/11

RECORD DRAWING CERTIFICATE
THESE DRAWINGS REFLECT RECORDED INFORMATION OBTAINED DURING CONSTRUCTION. INFORMATION PROVIDED HEREIN IS ACCURATE TO THE BEST OF MY KNOWLEDGE.
NAME DATE

SCALE:
BARS ON THIS SHEET ORIGINAL DRAWING 0 1
IF THIS BAR IS NOT 1 INCH THEN DRAWING IS NOT AT THE SCALE ACCORDINGLY

CONSTRUCTION RECORD
FIELD BOOK
STAKING
FOREMAN
AS-BUILT
INSPECTOR

STATE OF ALASKA 49TH Michael R. Eshenaur No. 6202 REGISTERED PROFESSIONAL ENGINEER

FACULTATIVE LAGOON
TEST HOLE BORING LOGS
CHEFORNAK, ALASKA

CE2 ENGINEERS, INC.
PO BOX 223288 ANCHORAGE, AK 99523 PH: 907-345-1018 FAX: 907-345-1015

REVISION	BY	DATE
REVISED PER 65% COMMENTS	CM	12/2/14

Project No. ____ Date JAN. 2014 Designed MRE Drawn CM Approved MRE

Sheet No. G3.4

G:\ACAD\CHEFORNAK\CYF1101 Sewage Lagoon\G3.1 TO G3.2.dwg, 2/26/2014 2:44:50 PM, cmerz, \\Ce2main\LANIER MP C2050/LD520C PCL 6

Mid Oct - End May

WINTER STORAGE

Cell 1 kept at "full" working depth (approx. 8') at all times. Cell 2 allowed to fill during this period.

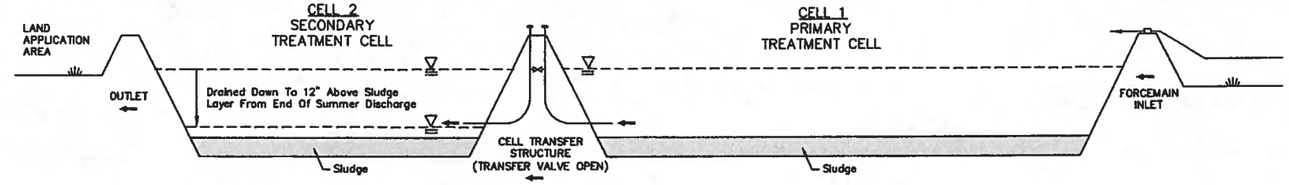

Late May - Early June

SPRING MAINTENANCE

Remove debris. Cut and remove brush within ten feet from perimeter fence and within enclosed area.

Inspect and repair fence, dikes, control structures, other facilities. Exercise valves. Ensure control structures, valves, and piping are ice-free.

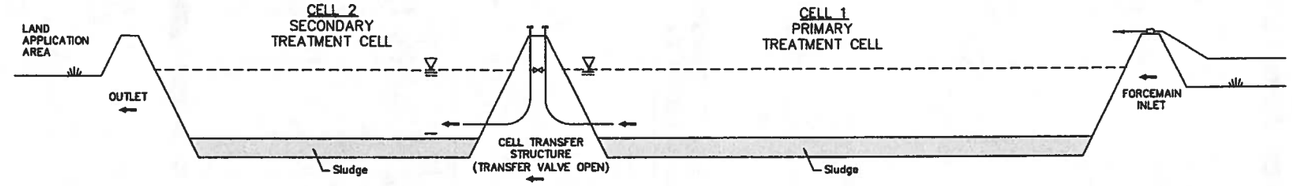

Early June

SPRING DISCHARGE

After Cell 2 has been ice free for a minimum of three weeks, begin discharging Cell 2 (through the Outlet Pumping System) to the Land Application Area. Adjust the pumping rate to obtain approximately 250 GPM discharge flow rate. Stop pumping with 12-inches of water remaining.
(See Sheet Note 1)

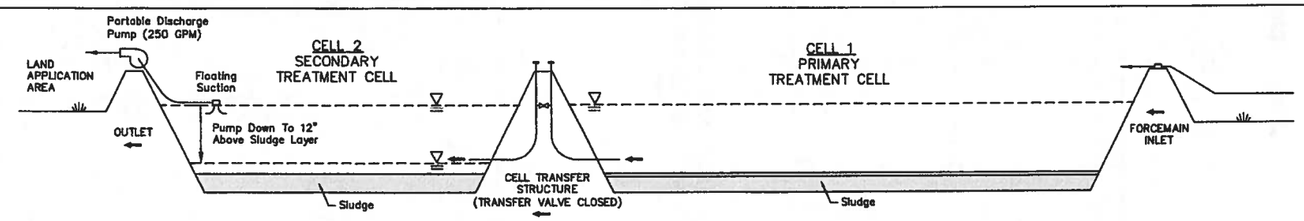

June - mid-Oct.

Cell 2 SUMMER Fill

Allow Cell 2 to fill.

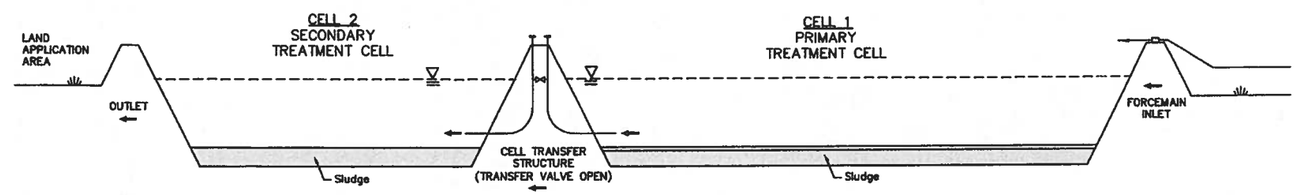

Mid October

END-OF-SUMMER DISCHARGE

Begin discharge of Cell 2 through the outlet Pumping System approximately two-weeks prior to the start of the "Freezing Season" during normal wet Fall weather. Adjust the pumping rate to obtain approximately 250 GPM. Stop pumping with 12-inches of water remaining.
(See Sheet Note 1)

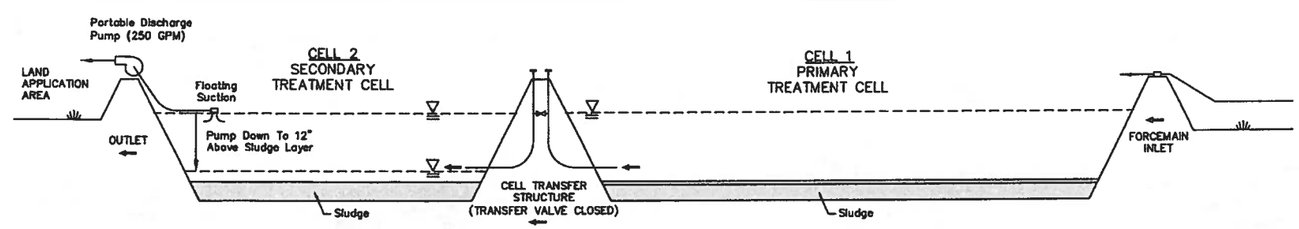

NOTE:

1. DISCHARGE WILL PROBABLY BE DONE UNDER STATE OF ALASKA GENERAL PERMIT NO. AKG573000. DURING DISCHARGE, SOME WASTEWATER SAMPLING WILL BE REQUIRED UNDER THIS PERMIT (TABLE 2, CLASS A), OR OTHER PERMIT ISSUED BY THE ALASKA DEP.T OF ENVIRONMENTAL CONSERVATION (ADEC).

1 / G4.0 **WASTEWATER LAGOON OPERATING PLAN**
N.T.S.

RECORD DRAWING CERTIFICATE
THESE DRAWINGS REFLECT RECORDED INFORMATION OBTAINED DURING CONSTRUCTION. INFORMATION PROVIDED HEREIN IS ACCURATE TO THE BEST OF MY KNOWLEDGE.
NAME ____ DATE ____

SCALE: AS SHOWN

BAR IS ONE INCH ON ORIGINAL DRAWING. 0 1"
IF NOT ONE INCH ON THIS SHEET, ADJUST SCALE ACCORDINGLY

CONSTRUCTION RECORD
FIELD BOOK
STAKING
FOREMAN
AS-BUILT
INSPECTOR

STATE OF ALASKA 49TH Michael R. Eastman No.4252 REGISTERED PROFESSIONAL ENGINEER

FACULTATIVE LAGOON
LAGOON OPERATING PLAN
CHEFORNAK, ALASKA

CE2 ENGINEERS, INC.
PO BOX 223249 ANCHORAGE, AK 99523 PH: 907-345-1018 FAX: 907-345-1015

REVISION	BY	DATE
REVISED PER 65% COMMENTS	CM	1/2014

Project No. ____ JAN 2014
Date ____ MRE
Designed ____ CM
Drawn ____ MRE
Approved ____

Sheet No. G4.0

G:\ACAD\CHEFORNAK\CYF1101 Sewage Lagoon\G4.0 Operating Plan.dwg, 2/27/2014 2:29:57 PM, cmerz, \\Ce2main\LANIER MP C2050/LD520C PCL 6

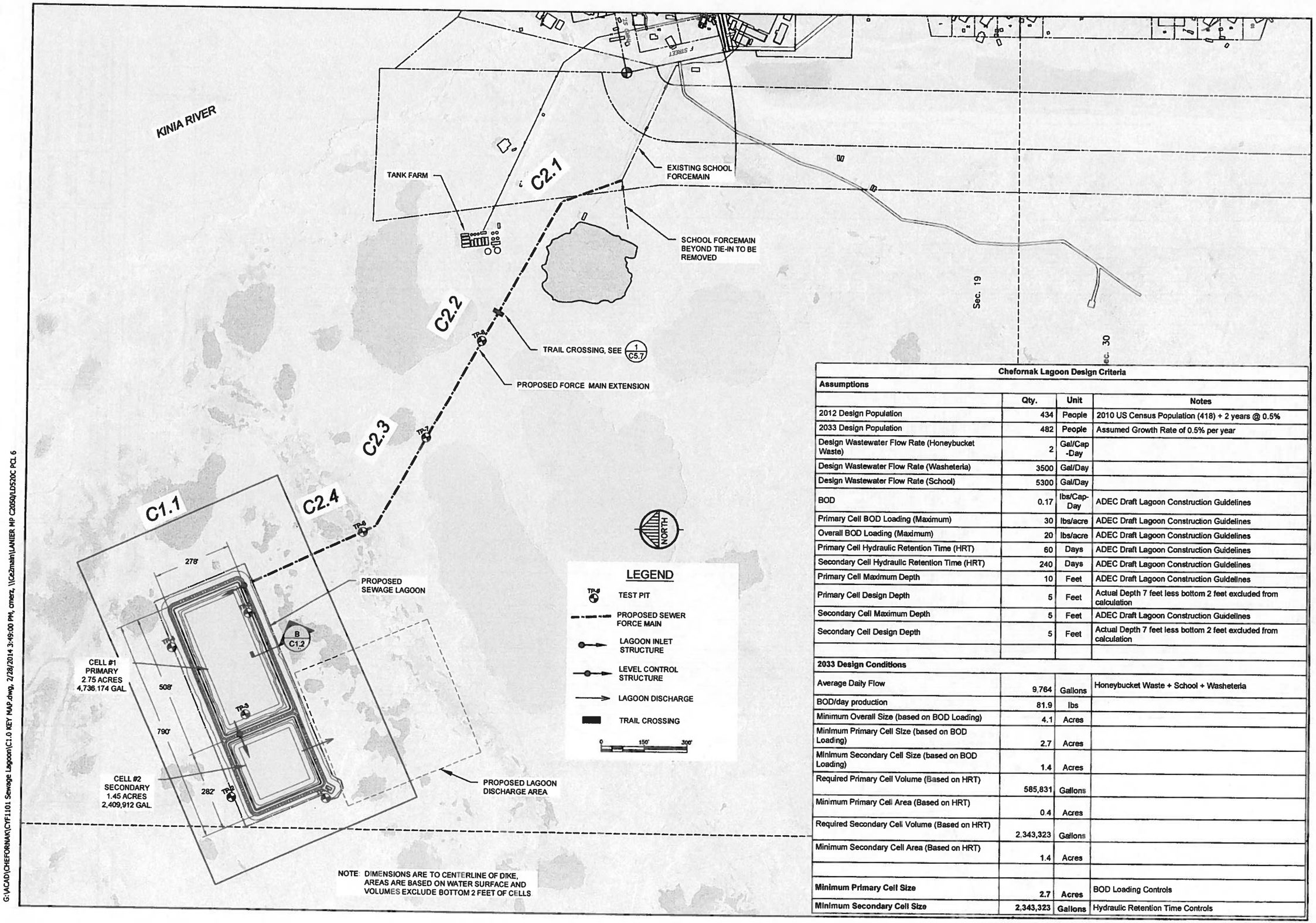

NOTE: DIMENSIONS ARE TO CENTERLINE OF DIKE, AREAS ARE BASED ON WATER SURFACE AND VOLUMES EXCLUDE BOTTOM 2 FEET OF CELLS

Chefornak Lagoon Design Criteria

Assumptions	Qty.	Unit	Notes
2012 Design Population	434	People	2010 US Census Population (418) + 2 years @ 0.5%
2033 Design Population	482	People	Assumed Growth Rate of 0.5% per year
Design Wastewater Flow Rate (Honeybucket Waste)	2	Gal/Cap -Day	
Design Wastewater Flow Rate (Washeteria)	3500	Gal/Day	
Design Wastewater Flow Rate (School)	5300	Gal/Day	
BOD	0.17	lbs/Cap-Day	ADEC Draft Lagoon Construction Guidelines
Primary Cell BOD Loading (Maximum)	30	lbs/acre	ADEC Draft Lagoon Construction Guidelines
Overall BOD Loading (Maximum)	20	lbs/acre	ADEC Draft Lagoon Construction Guidelines
Primary Cell Hydraulic Retention Time (HRT)	60	Days	ADEC Draft Lagoon Construction Guidelines
Secondary Cell Hydraulic Retention Time (HRT)	240	Days	ADEC Draft Lagoon Construction Guidelines
Primary Cell Maximum Depth	10	Feet	ADEC Draft Lagoon Construction Guidelines
Primary Cell Design Depth	5	Feet	Actual Depth 7 feet less bottom 2 feet excluded from calculation
Secondary Cell Maximum Depth	5	Feet	ADEC Draft Lagoon Construction Guidelines
Secondary Cell Design Depth	5	Feet	Actual Depth 7 feet less bottom 2 feet excluded from calculation
2033 Design Conditions			
Average Daily Flow	9,764	Gallons	Honeybucket Waste + School + Washeteria
BOD/day production	81.9	lbs	
Minimum Overall Size (based on BOD Loading)	4.1	Acres	
Minimum Primary Cell Size (based on BOD Loading)	2.7	Acres	
Minimum Secondary Cell Size (based on BOD Loading)	1.4	Acres	
Required Primary Cell Volume (Based on HRT)	585,831	Gallons	
Minimum Primary Cell Area (Based on HRT)	0.4	Acres	
Required Secondary Cell Volume (Based on HRT)	2,343,323	Gallons	
Minimum Secondary Cell Area (Based on HRT)	1.4	Acres	
Minimum Primary Cell Size	2.7	Acres	BOD Loading Controls
Minimum Secondary Cell Size	2,343,323	Gallons	Hydraulic Retention Time Controls

RECORD DRAWING CERTIFICATE
THESE DRAWINGS REFLECT RECORDED INFORMATION OBTAINED DURING CONSTRUCTION. INFORMATION PROVIDED HEREIN IS ACCURATE TO THE BEST OF MY KNOWLEDGE.
NAME DATE

SCALE: AS SHOWN

CONSTRUCTION RECORD
FIELD BOOK
STAKING
FOREMAN
AS-BUILT
INSPECTOR

STATE OF ALASKA 49TH Michael R. Eckman No.8252 REGISTERED PROFESSIONAL ENGINEER
2-28-2014

FACULTATIVE LAGOON
KEY MAP AND DESIGN CRITERIA
CHEFORNAK, ALASKA

CE2 ENGINEERS, INC.
PO BOX 102288 ANCHORAGE, AK 99510 PH: 907-349-9100 FAX: 907-349-9105

REVISION	BY	DATE
REVISED PER 65% COMMENTS	CM	1/2014

Project No. ___ Date JAN. 2014
Designed MRE
Drawn CM
Approved MRE

Sheet No. C1.0

G:\ACAD\CHEFORNAK\CYF1101 Sewage Lagoon\C1.0 KEY MAP.dwg, 2/28/2014 3:49:00 PM, cmerz, \\Ce2main\LANIER MP C2050\LD520C PCL 6

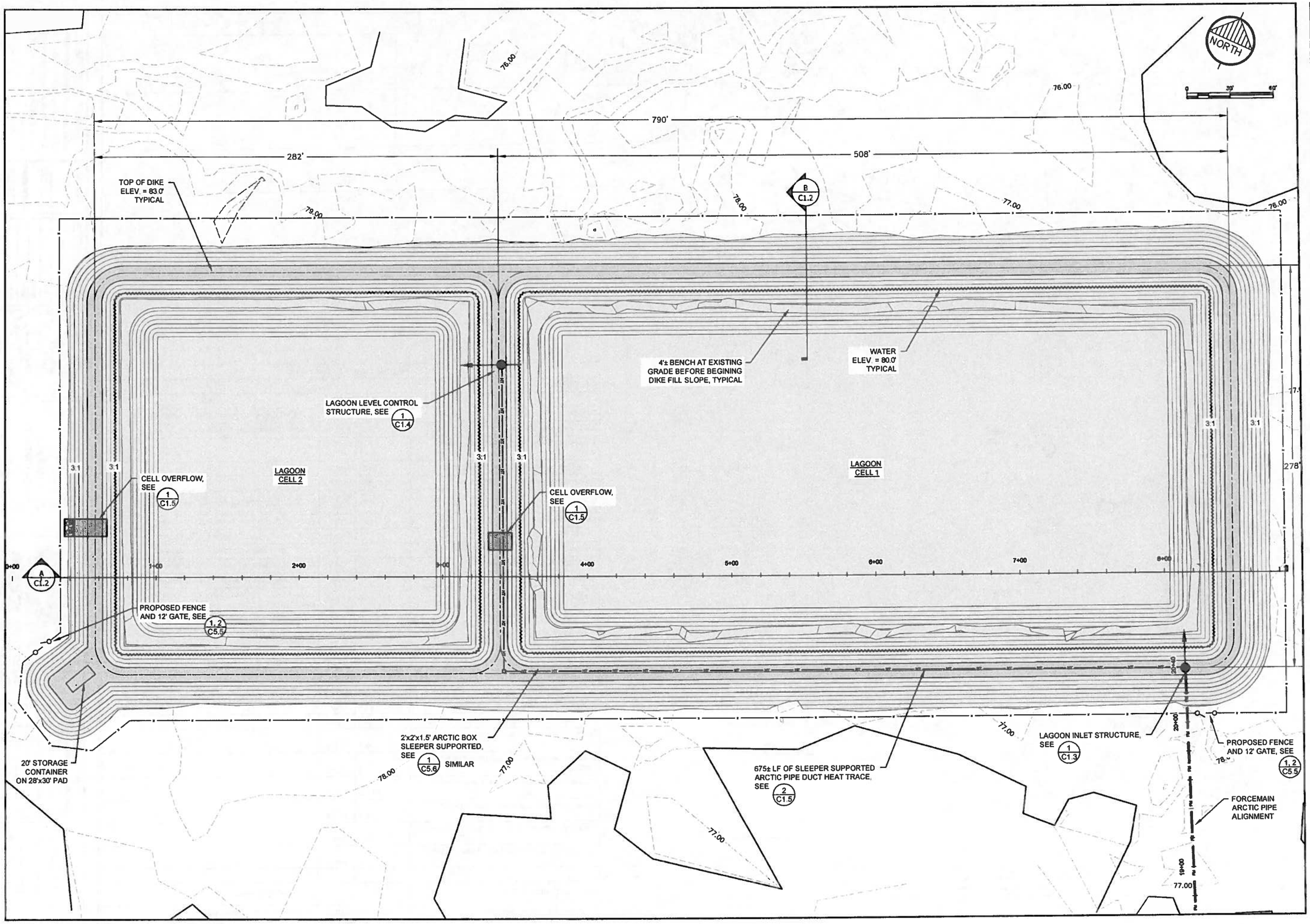

RECORD DRAWING CERTIFICATE

THESE DRAWINGS REFLECT RECORDED INFORMATION OBTAINED DURING CONSTRUCTION. INFORMATION PROVIDED HEREIN IS ACCURATE TO THE BEST OF MY KNOWLEDGE.

NAME: DATE

SCALE: AS SHOWN

BAR IS ONE INCH ON ORIGINAL DRAWING

0 1"

IF NOT ONE INCH ON THIS SHEET, ADJUST SCALES ACCORDINGLY

CONSTRUCTION RECORD

FIELD BOOK

STAKING

FOREMAN

A.S.BUILT

INSPECTOR

STATE OF ALASKA 49TH Michael R. Eckman No. 6252 REGISTERED PROFESSIONAL ENGINEER

FACULTATIVE LAGOON

LAGOON SITE PLAN

CHEFORNAK, ALASKA

CE2 ENGINEERS, INC.

PO BOX 93868 ANCHORAGE, AK 99509 PH: 907-349-3515 FAX: 907-349-3518

REVISION	BY	DATE
REVISED PER 65% COMMENTS	CM	1/28/14

Project No. ____ Date JAN. 2014 Designed MRE Drawn CM Approved MRE

Sheet No. C1.1

G:\ACAD\CHEFORNAK\CYF1101 Sewage Lagoon\C1.1 LAGOON SITE PLAN 2013.dwg, 2/28/2014 3:44:46 PM, cmerz, \\Ce2main\LANIER HP C2050/LD520C PCL 6

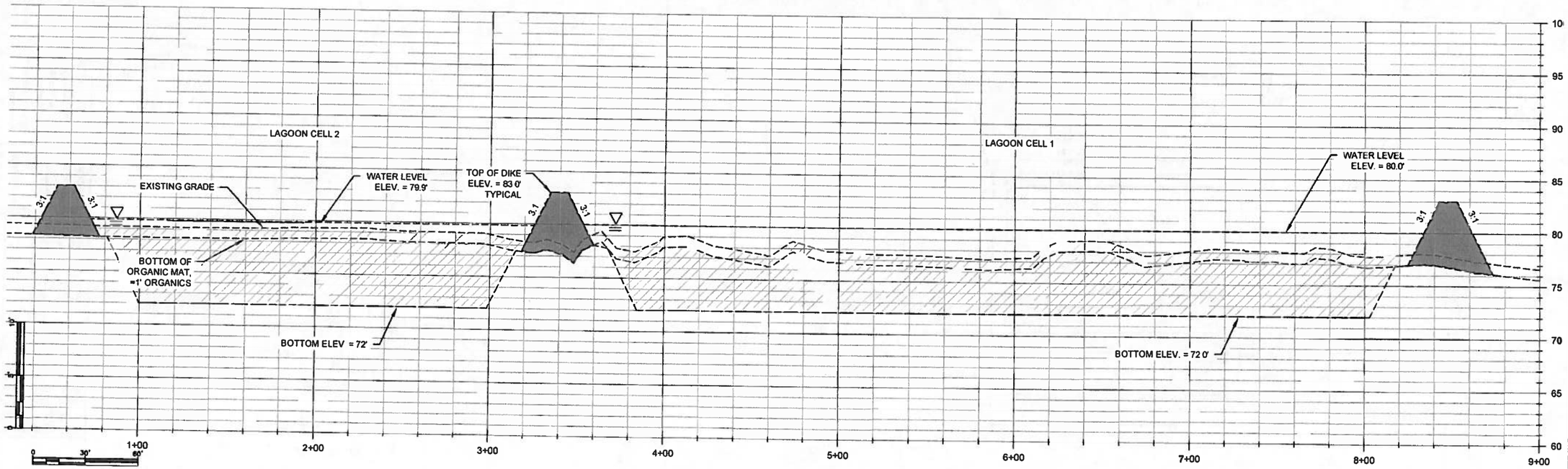

(A) LAGOON CROSS-SECTION

1:6 VERTICAL EXAGGERATION

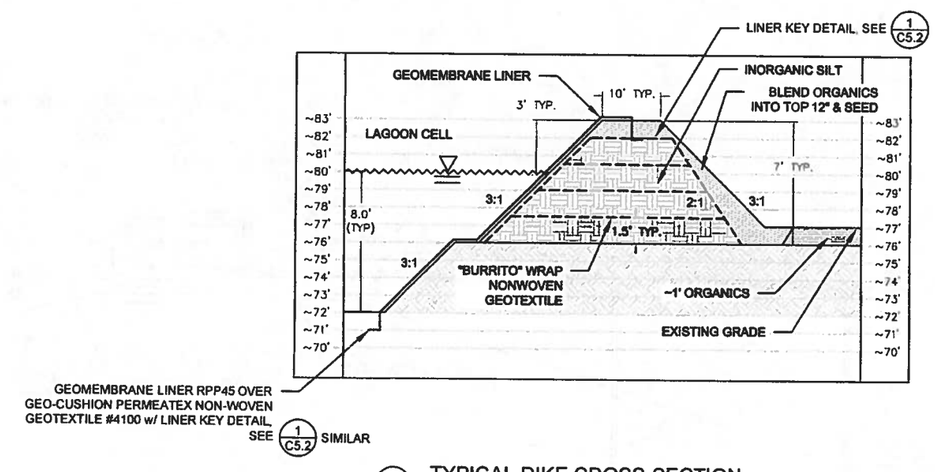

(B) TYPICAL DIKE CROSS-SECTION

3:1 VERTICAL SCALE

RECORD DRAWING CERTIFICATE
THESE DRAWINGS REFLECT RECORDED INFORMATION OBTAINED DURING CONSTRUCTION. INFORMATION PROVIDED HEREIN IS ACCURATE TO THE BEST OF MY KNOWLEDGE.
NAME
DATE

SCALE: AS SHOWN

CONSTRUCTION RECORD
FIELD BOOK
STAKING
FOREMAN
AS-BUILT
INSPECTOR

STATE OF ALASKA 49TH Michael R. Eastman 49-8262 REGISTERED PROFESSIONAL ENGINEER

7-28-2014

FACULTATIVE LAGOON

LAGOON CROSS SECTIONS

CHEFORNAK, ALASKA

CE2 ENGINEERS, INC.
PO BOX 230249 ANCHORAGE, AK 99523 PH: 907-349-9193 FAX: 907-349-9195

REVISION	BY	DATE
REVISED PER 60% COMMENTS	CM	1/20/14

Project No. ____
Date JAN 2014
Designed MRE
Drawn CM
Approved MRE

Sheet No.
C1.2

G:\ACAD\CHEFORNAK\CYF1101 Sewage Lagoon\C1.2 LAGOON CROSS SECTIONS.dwg, 2/27/2014 3:48:34 PM, cmerz, 1\Ce2main\LANIER MP C2050/LD520C PCL 6

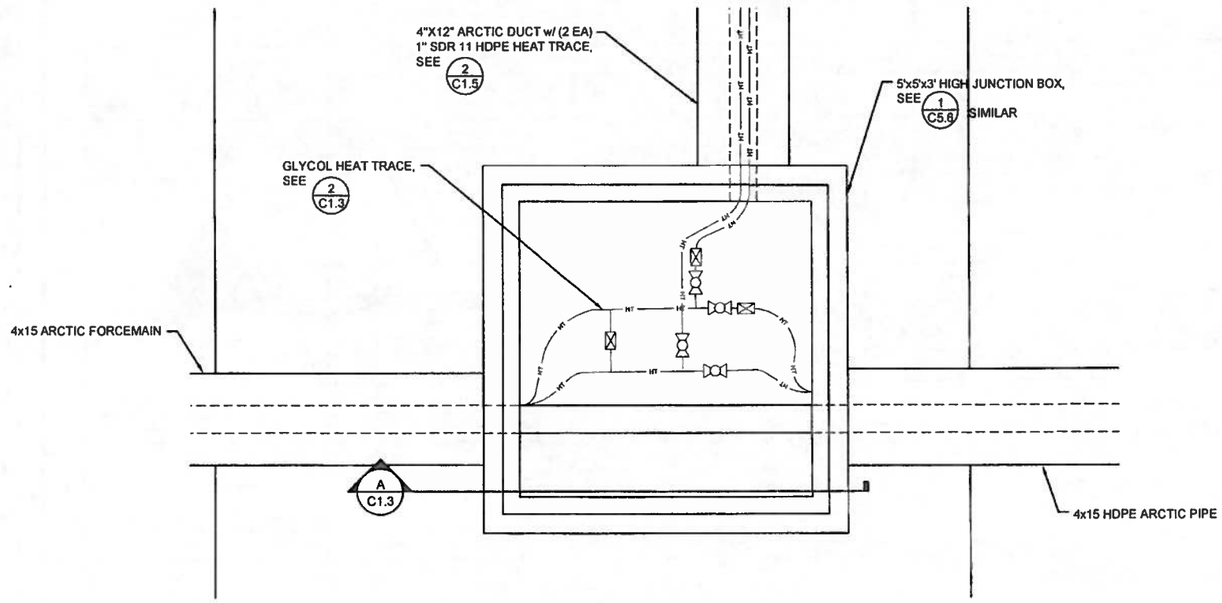

1/C1.3 LAGOON INLET STRUCTURE PLAN
1" = 1'-0"

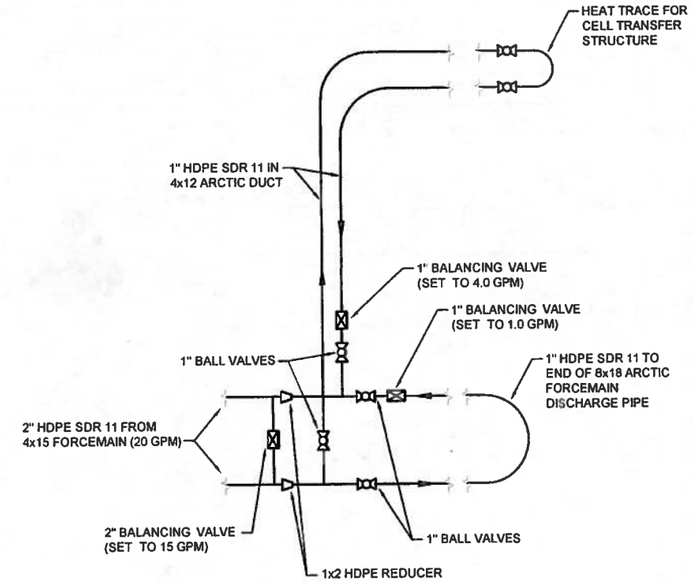

2/C1.3 GLYCOL HEAT TRACE SCHEMATIC
NTS

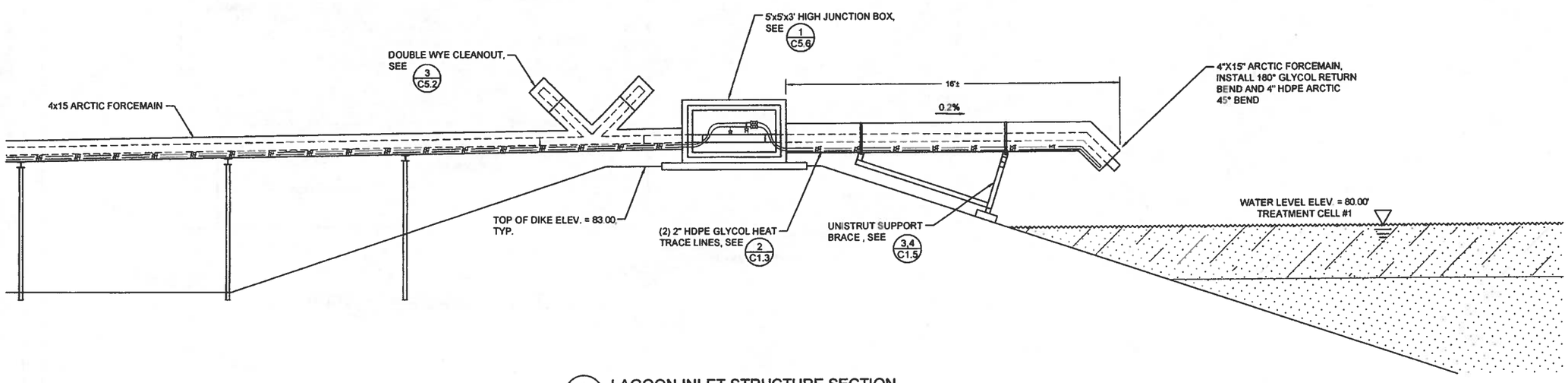

A/C1.3 LAGOON INLET STRUCTURE SECTION
3/8" = 1'-0"

RECORD DRAWING CERTIFICATE
THESE DRAWINGS REFLECT RECORDED INFORMATION OBTAINED DURING CONSTRUCTION. INFORMATION PROVIDED HEREIN IS ACCURATE TO THE BEST OF MY KNOWLEDGE.
NAME: DATE:

SCALE: AS SHOWN
BAR IS ONE INCH ON ORIGINAL DRAWING
0 1"
IF NOT ONE INCH ON THIS SHEET, ADJUST SCALES ACCORDINGLY

CONSTRUCTION RECORD
FIELD BOOK
STAKING
FOREMAN
AS-BUILT
INSPECTOR

STATE OF ALASKA
Michael R. Erdman
No. 8262
PROFESSIONAL ENGINEER
7-29-14

FACULTATIVE LAGOON
LAGOON INLET STRUCTURE
CHEFORNAK, ALASKA

CE2 ENGINEERS, INC.
PO BOX 223246 ANCHORAGE, AK 99503 PH: 907-345-1015 FAX: 907-345-1015

REVISION	BY	DATE
REVISED PER 60% COMMENTS	CM	1/28/14

Project No. ___ JAN. 2014
Date ___ MRE
Designed ___ CM
Drawn ___ MRE
Approved

Sheet No.
C1.3

G:\ACAD\CHEFORNAK\CYF1101 Sewage Lagoon\C1.3 INTAKE STRUCTURE.dwg, 2/28/2014 3:51:24 PM, cmerz, \\Ce2main\LANIER MP C2050/LD520C PCL 6

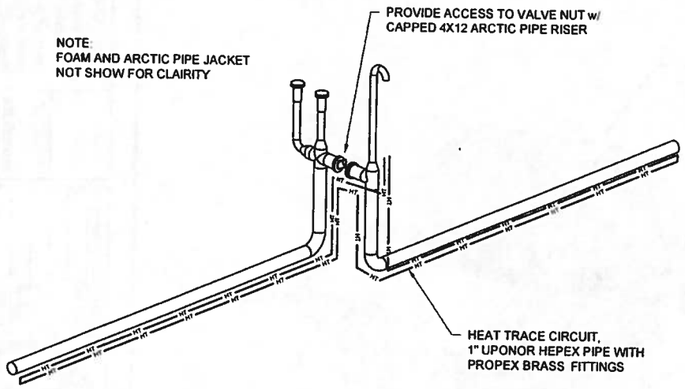

PERSPECTIVE VIEW
N.T.S.

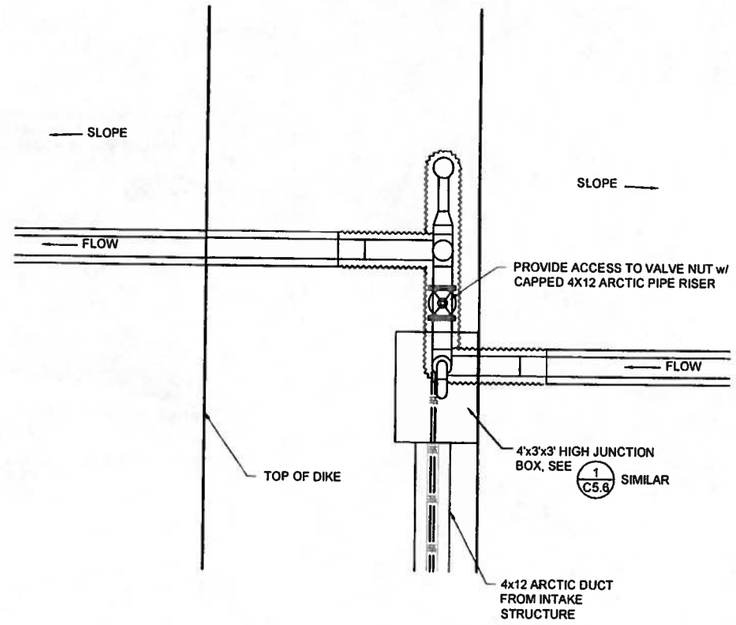

PLAN VIEW
3/8" = 1'-0"

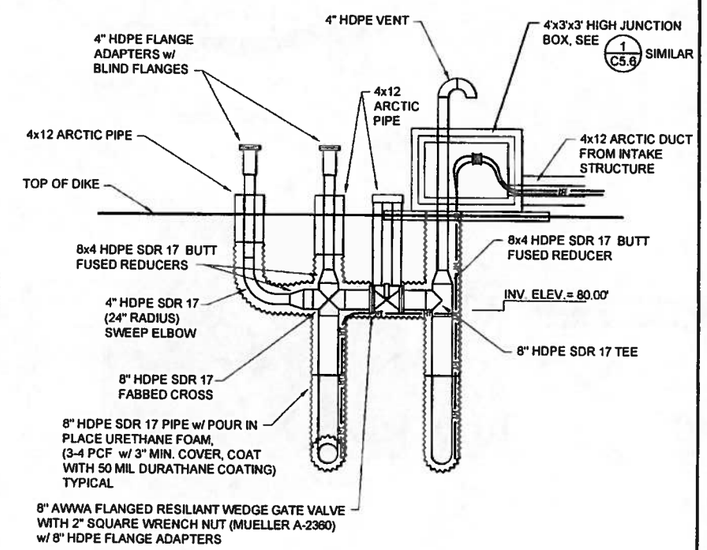

ELEVATION VIEW
3/8" = 1'-0"

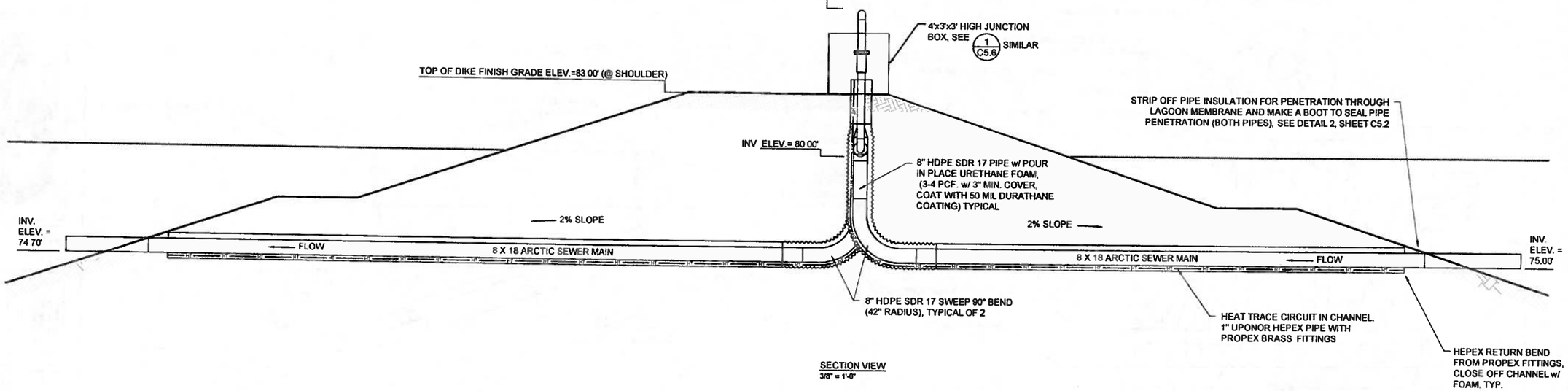

SECTION VIEW
3/8" = 1'-0"

1/C1.4 CELL TRANSFER STRUCTURE
NTS

RECORD DRAWING CERTIFICATE
THESE DRAWINGS REFLECT RECORDED INFORMATION OBTAINED DURING CONSTRUCTION. INFORMATION PROVIDED HEREIN IS ACCURATE TO THE BEST OF MY KNOWLEDGE.
NAME DATE

SCALE: AS SHOWN
BAR IS ONE INCH ON ORIGINAL DRAWING
0 1" 2"
IF NOT ONE INCH ON THIS SHEET, ADJUST SCALES

CONSTRUCTION RECORD
FIELD BOOK
STAKING
FOREMAN
AS-BUILT
INSPECTOR

STATE OF ALASKA 49TH Michael R. Eshman No.6262 PROFESSIONAL ENGINEER
8-29-2014

FACULTATIVE LAGOON
CELL TRANSFER STRUCTURE
CHEFORNAK, ALASKA

CE2 ENGINEERS, INC.
PO BOX 223948 ANCHORAGE, AK 99523 PH: 907-349-9310 FAX: 907-349-9315

REVISION	BY	DATE
REVISED PER 60% COMMENTS	CM	1/29/14

Project No.
Date JAN 2014
Designed MRE
Drawn CM
Approved MRE

Sheet No.
C1.4

G:\ACAD\CHEFORNAK\CYF1101 Sewage Lagoon\C1.4 Transfer Structure.dwg, 2/28/2014 2:32:07 PM, cmerz, \\Ce2main\LANIER MP C2050\LD520C PCL 6

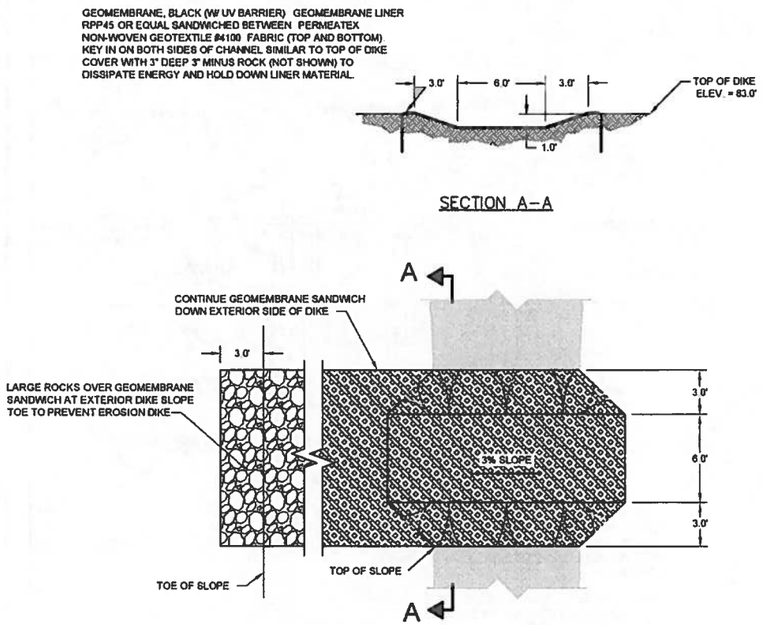

1 C1.5 LAGOON OVERFLOW PIPE
NTS

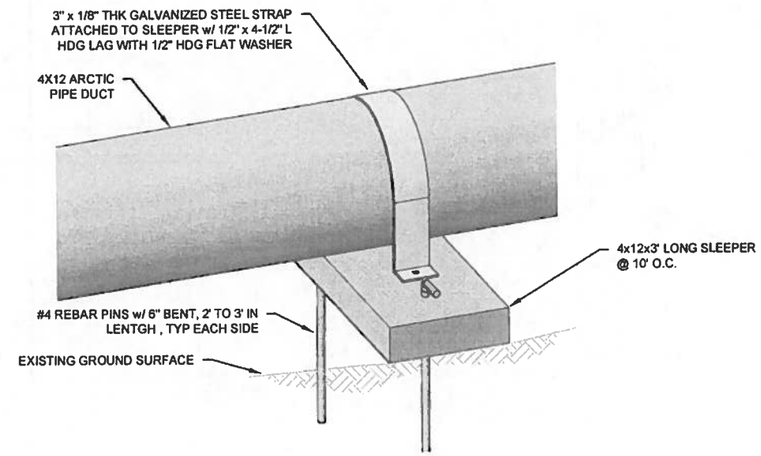

2 C1.5 SLEEPER SUPPORTED ARCTIC DUCT
NTS

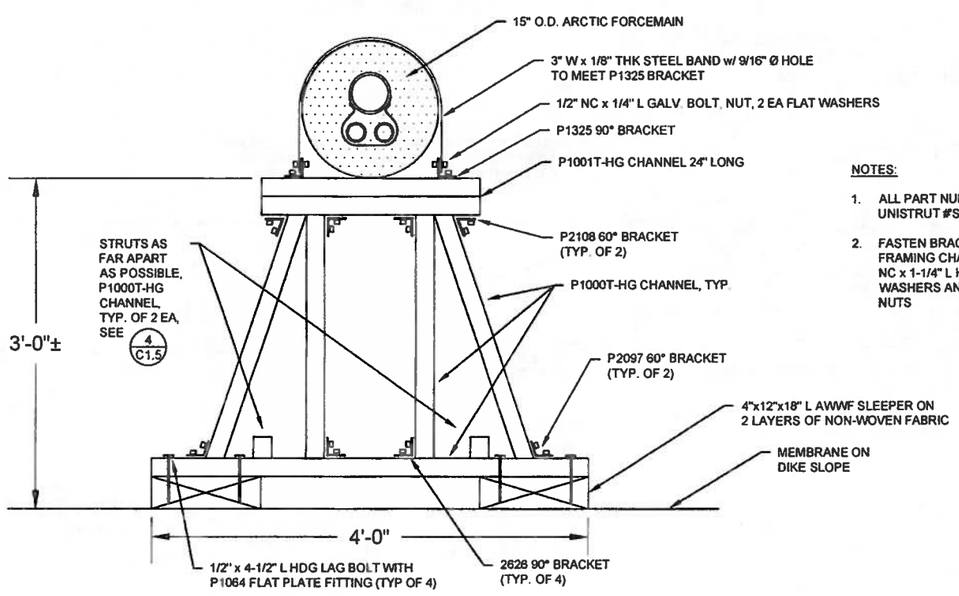

NOTES:

1. ALL PART NUMBERS ARE UNISTRUT #'S
2. FASTEN BRACKETS TO FRAMING CHANNEL WITH 1/2 NC x 1-1/4" L HEX BOLTS, FLAT WASHERS AND 1/2" NC STRUT NUTS

3 C1.5 FORCEMAIN OUTLET SUPPORT
NTS

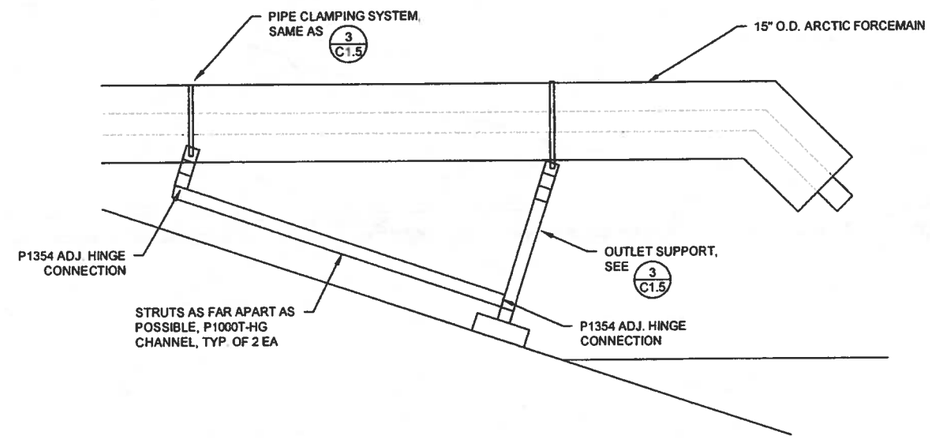

4 C1.5 FORCEMAIN SUPPORT BRACKET
NTS

RECORD DRAWING CERTIFICATE
THESE DRAWINGS REFLECT RECORDED INFORMATION OBTAINED DURING CONSTRUCTION. INFORMATION PROVIDED HEREIN IS ACCURATE TO THE BEST OF MY KNOWLEDGE.
NAME: DATE:

SCALE: AS SHOWN
BAR IS ONE INCH ON ORIGINAL DRAWING
0 1"
IF NOT ONE INCH ON THIS SHEET, ADJUST SCALES ACCORDINGLY

CONSTRUCTION RECORD
FIELD BOOK
STAKING
FOREMAN
AS-BUILT
INSPECTOR

STATE OF ALASKA
Michael R. Erickson
No. 8252
REGISTERED PROFESSIONAL ENGINEER
2-28-2014

FACULTATIVE LAGOON
LAGOON DETAILS
CHEFORNAK, ALASKA

CE2 ENGINEERS, INC.
PO BOX 232948 ANCHORAGE, AK 99523 PH: 907-345-6515 FAX: 907-345-6515

REVISION	BY	DATE
REVISED PER 65% COMMENTS	CM	1/28/14

Project No. ____ JAN. 2014
Date ____ MRE
Designed ____ CM
Drawn ____ MRE
Approved ____

Sheet No.
C1.5

G:\ACAD\CHEFORNAK\CYF1101 Sewage Lagoon\C1.5 Lagoon Details.dwg, 2/28/2014 2:35:01 PM, cmerz, \\Ce2main\LANIER MP C2050\LD520C PCL 6

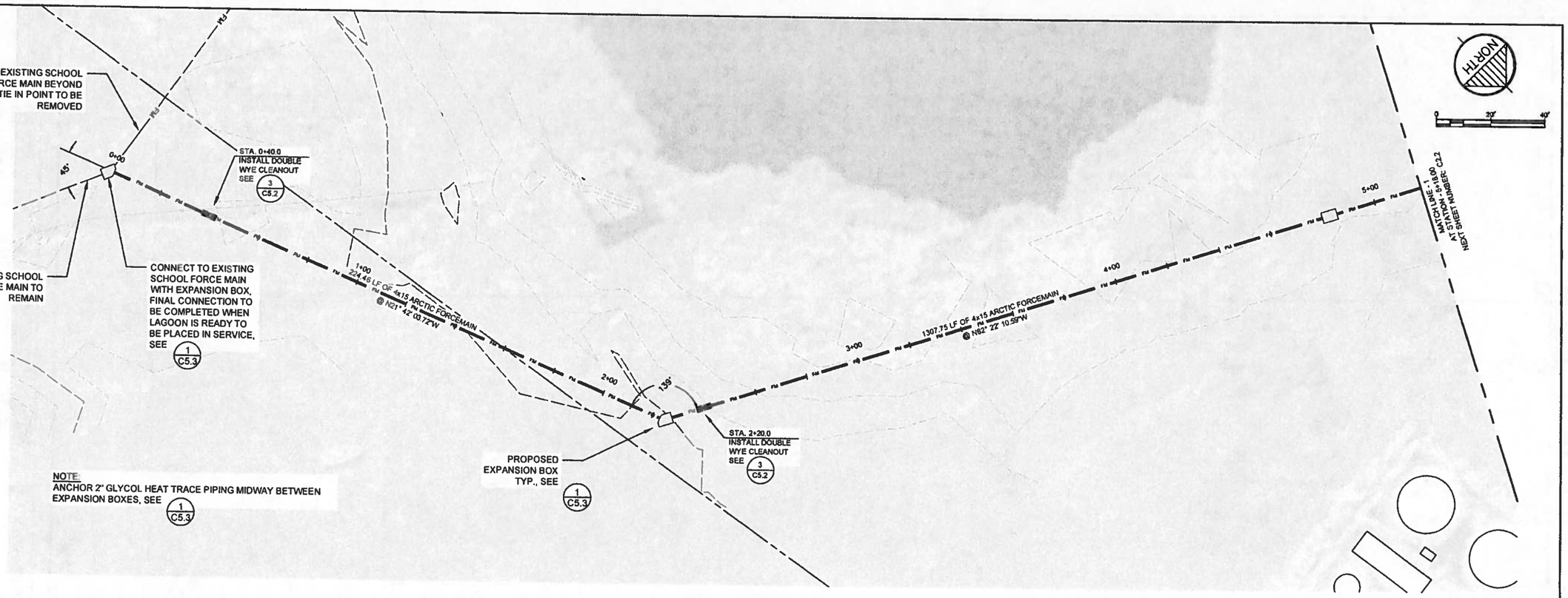

NOTE:
ANCHOR 2" GLYCOL HEAT TRACE PIPING MIDWAY BETWEEN EXPANSION BOXES, SEE 1 C5.3

NOTE: ELEVATIONS SHOWN ARE AT BOTTOM OF ARCTIC PIPE JACKET (TOP OF PIPE SUPPORT BEAM)

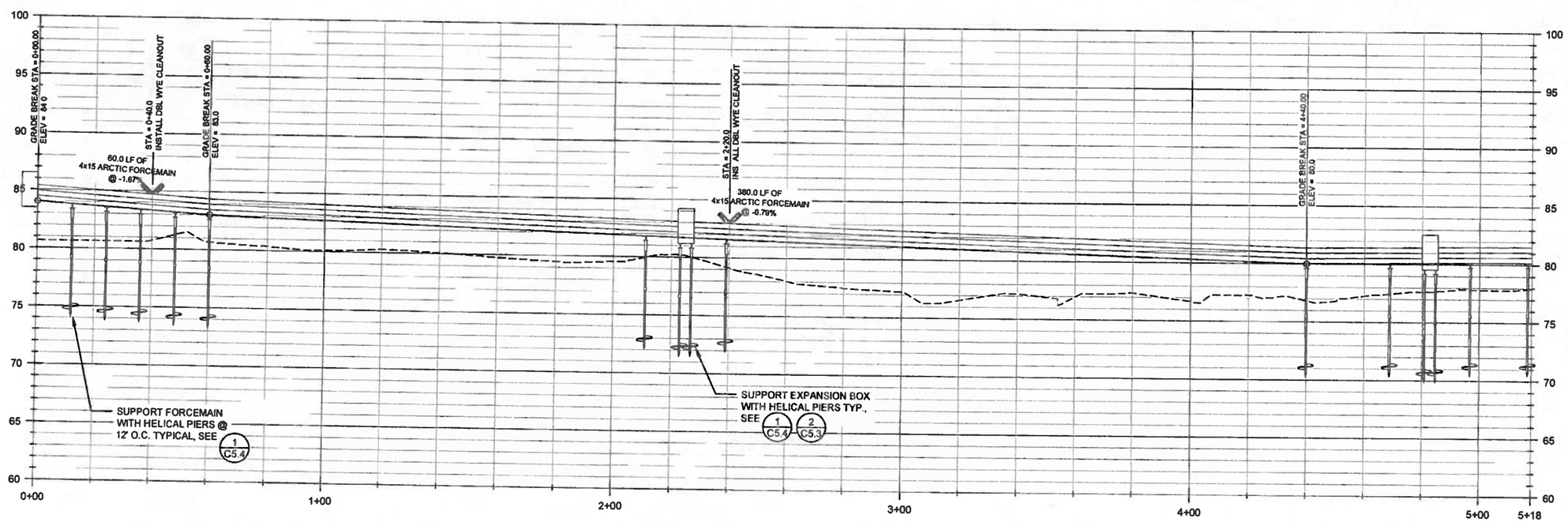

RECORD DRAWING CERTIFICATE
THESE DRAWINGS REFLECT RECORDED INFORMATION OBTAINED DURING CONSTRUCTION. INFORMATION PROVIDED HEREIN IS ACCURATE TO THE BEST OF MY KNOWLEDGE.
NAME DATE

SCALE:
BAR IS 1DIV ON ORIGINAL DRAWING
0 1"
IF NOT 1 DIV, SCALE THE SHEET ACCORDINGLY

CONSTRUCTION RECORD
FIELD BOOK
STAKING
FOREMAN
AS-BUILT
INSPECTOR

STATE OF ALASKA
Michael R. Eastman
No. 8802
REGISTERED PROFESSIONAL ENGINEER
2-28-2014

FACULTATIVE LAGOON
PLAN AND PROFILE
CHEFORNAK, ALASKA

CE2 ENGINEERS, INC.
PO BOX 223244 ANCHORAGE, AK 99523 PH: 907-345-5310 FAX: 907-345-5315

REVISION	BY	DATE
REVISED PER 65% COMMENTS	CM	1/28/14

Project No. ____
Date JAN. 2014
Designed ____
Drawn CM
Approved ____

Sheet No.
C2.1

G:\ACAD\CHEFORNAK\CYF1101 Sewage Lagoon\C2.1 Plan and Profiles.dwg, 2/27/2014 5:46:54 PM, cmerz, \\Ce2main\LANIER MP C2050/LD520C PCL 6

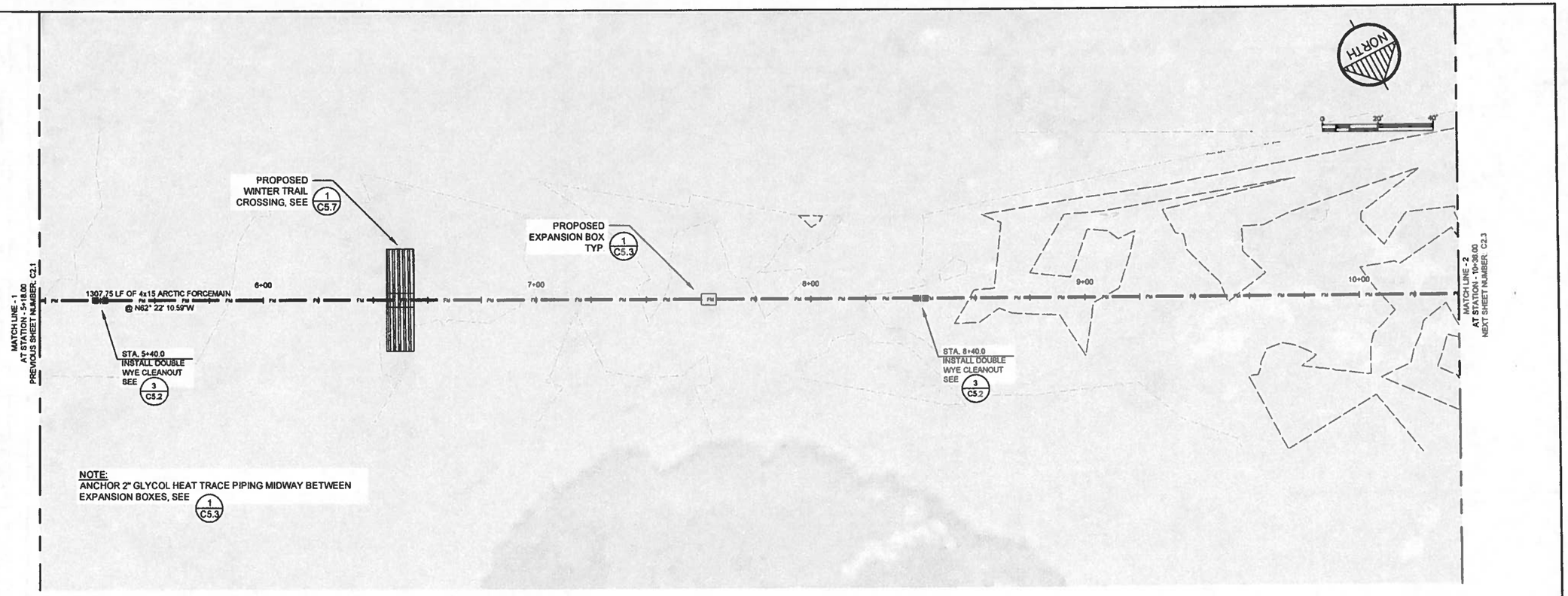

NOTE:
ANCHOR 2" GLYCOL HEAT TRACE PIPING MIDWAY BETWEEN EXPANSION BOXES, SEE 1/C5.3

NOTE: ELEVATIONS SHOWN ARE AT BOTTOM OF ARCTIC PIPE JACKET (TOP OF PIPE SUPPORT BEAM)

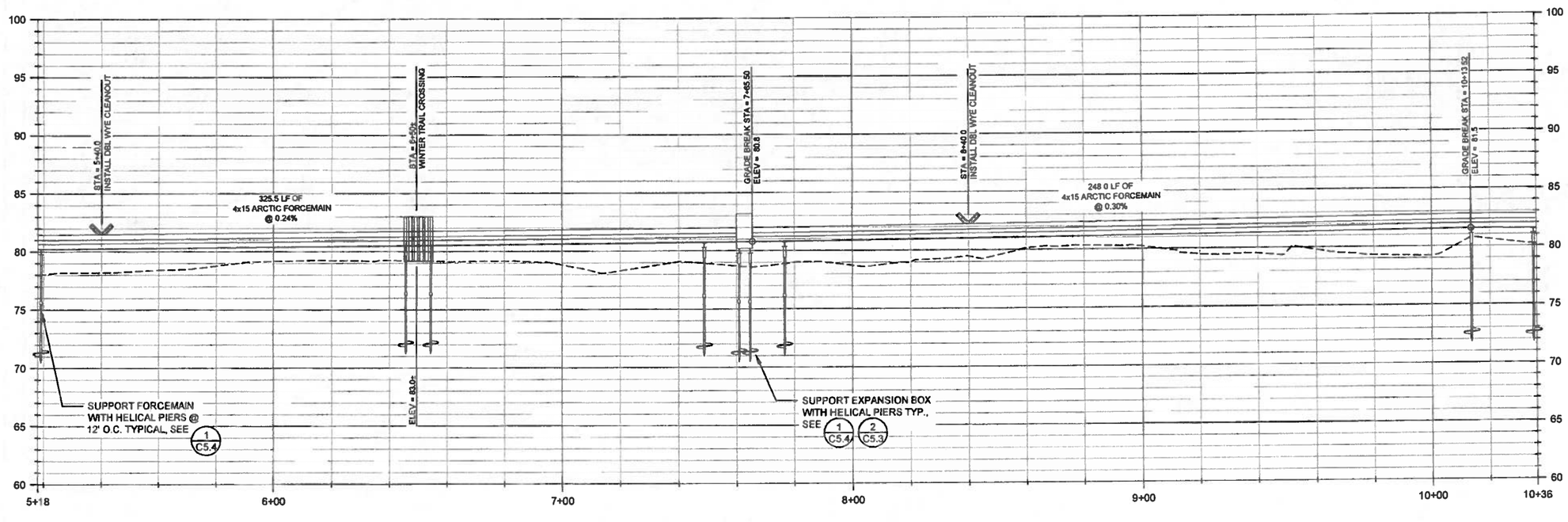

RECORD DRAWING CERTIFICATE
THESE DRAWINGS REFLECT RECORDED INFORMATION OBTAINED DURING CONSTRUCTION. INFORMATION PROVIDED HEREIN IS ACCURATE TO THE BEST OF MY KNOWLEDGE.
NAME DATE

SCALE:
BAR IS ONE INCH ON ORIGINAL DRAWING
0 1"
IF NOT ONE INCH ON THIS SHEET, ADJUST SCALE ACCORDINGLY

CONSTRUCTION RECORD
FIELD BOOK
STAKING
FOREMAN
AS-BUILT
INSPECTOR

STATE OF ALASKA 49TH Michael R. Erickson No.6252 REGISTERED PROFESSIONAL ENGINEER
1-29-2014

FACULTATIVE LAGOON
PLAN AND PROFILE
CHEFORNAK, ALASKA

CE2 ENGINEERS, INC.
PO BOX 223549 ANCHORAGE, AK 99503 PH: 907-349-9515 FAX: 907-349-9516

REVISION	BY	DATE
REVISED PER 65% COMMENTS	CM	1/20/14

Project No. ____
Date JAN. 2014
Designed ____
Drawn CM
Approved ____

Sheet No.
C2.2

G:\ACAD\CHEFORNAK\CYF1101 Sewage Lagoon\C2.1 Plan and Profiles.dwg, 2/27/2014 5:49:41 PM, cmerz, \\Ce2main\LANTER MP C2050/LD520C PCL 6

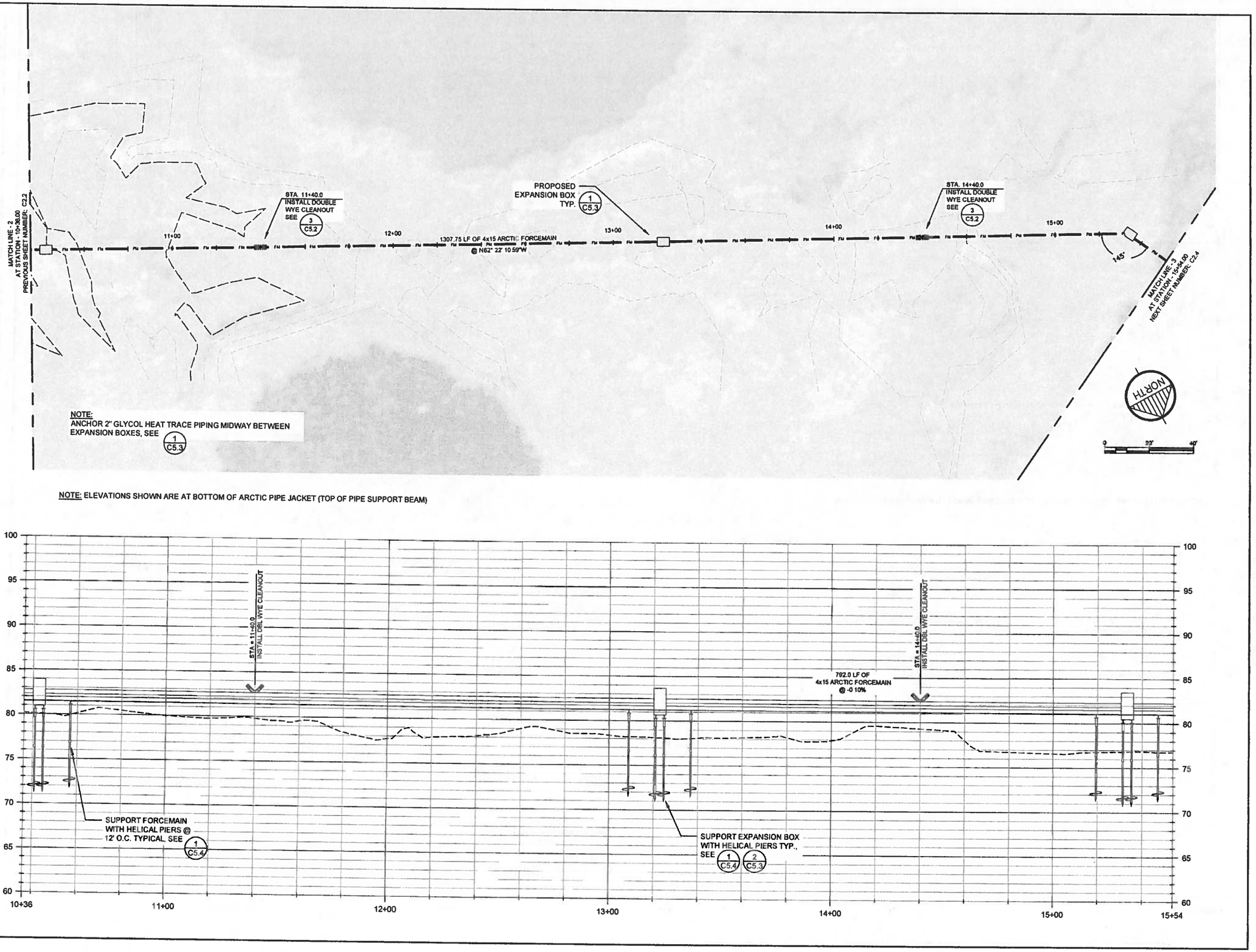

G:\ACAD\CHEFORNAK\CYF1101 Sewage Lagoon\C2.1 Plan and Profiles.dwg, 2/27/2014 5:50:49 PM, cmerz, \\Ce2main\LANIER MP C2050/LD520C PCL 6

RECORD DRAWING CERTIFICATE

THESE DRAWINGS REFLECT RECORDED INFORMATION OBTAINED DURING CONSTRUCTION. INFORMATION PROVIDED HEREIN IS ACCURATE TO THE BEST OF MY KNOWLEDGE.

NAME DATE

SCALE:

BAR IS ONE INCH ON ORIGINAL DRAWING

0 1"

IF NOT ONE INCH ON THIS SHEET, ADJUST SCALES ACCORDINGLY

CONSTRUCTION RECORD

FIELD BOOK

STAKING

FOREMAN

AS-BUILT

INSPECTOR

STATE OF ALASKA 49TH Michael R. Eckman No.9262 REGISTERED PROFESSIONAL ENGINEER

2-27-2014

FACULTATIVE LAGOON

PLAN AND PROFILE

CHEFORNAK, ALASKA

CE2 ENGINEERS, INC.

PO BOX 220248 ANCHORAGE, AK 99503 PH: 907-248-9310 FAX: 907-248-1015

REVISION	BY	DATE
REVISED PER 65% COMMENTS	CM	1/28/14

Project No. ____ Date JAN. 2014 Designed ____ Drawn CM Approved ____

Sheet No. C2.3

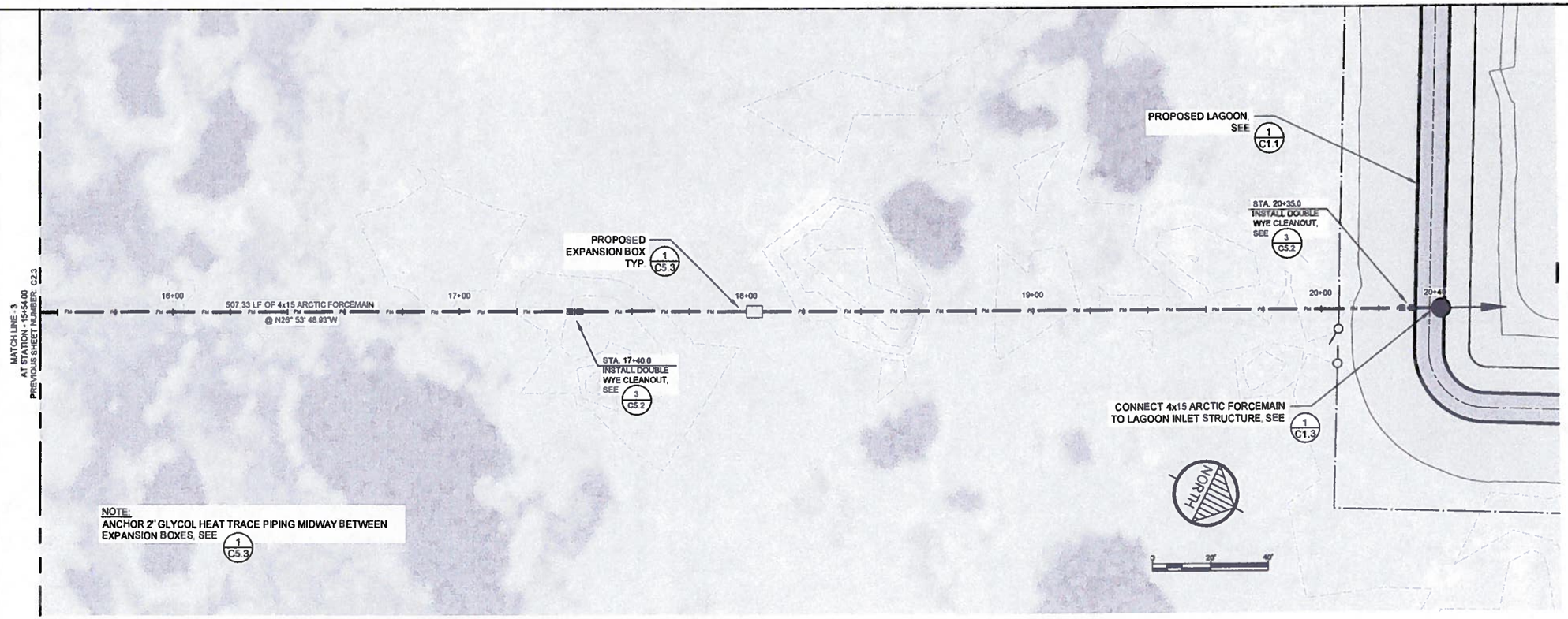

NOTE:
ANCHOR 2" GLYCOL HEAT TRACE PIPING MIDWAY BETWEEN EXPANSION BOXES, SEE 1/C5.3

NOTE: ELEVATIONS SHOWN ARE AT BOTTOM OF ARCTIC PIPE JACKET (TOP OF PIPE SUPPORT BEAM)

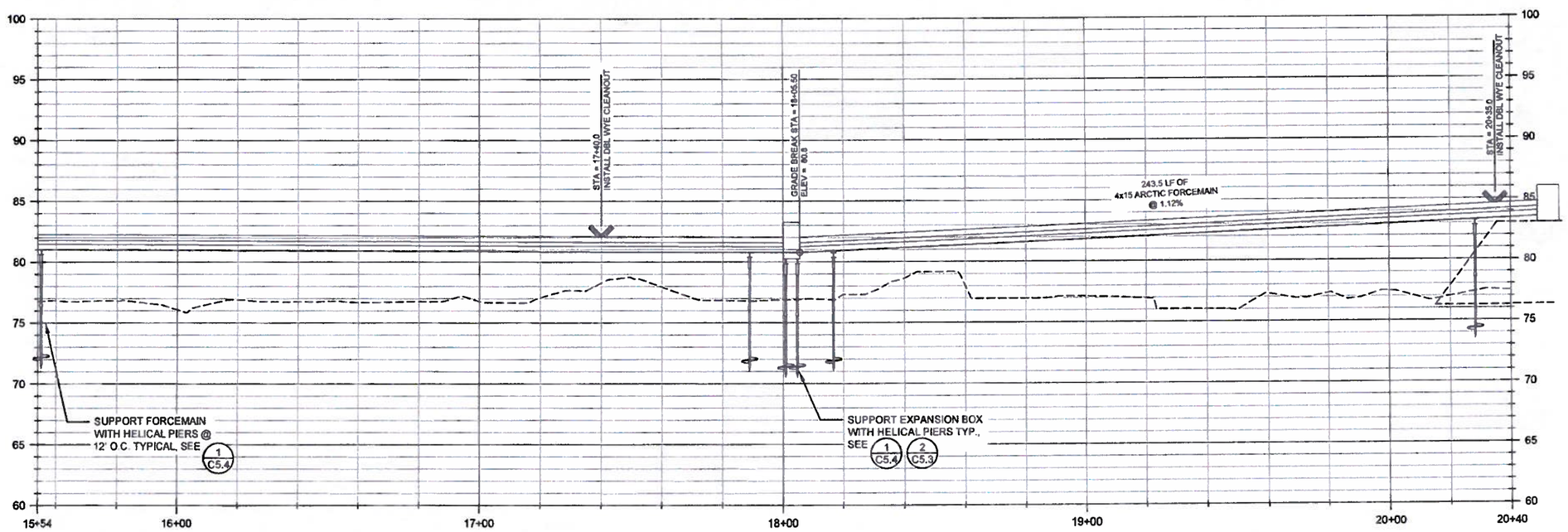

RECORD DRAWING CERTIFICATE
THESE DRAWINGS REFLECT RECORDED INFORMATION OBTAINED DURING CONSTRUCTION. INFORMATION PROVIDED HEREIN IS ACCURATE TO THE BEST OF MY KNOWLEDGE.
NAME DATE

SCALE:
SUM IS FIVE INCH ON ORIGINAL DRAWING
0 5
IF NOT ONE INCH ON THIS SHEET, ADJUST SCALES ACCORDINGLY

CONSTRUCTION RECORD
FIELD BOOK
STAKING
FOREMAN
AS-BUILT
INSPECTOR

STATE OF ALASKA
Michael R. Eastman
No. 6352
REGISTERED PROFESSIONAL ENGINEER
2-28-2014

FACULTATIVE LAGOON
PLAN AND PROFILE
CHEFORNAK, ALASKA

CE2 ENGINEERS, INC.
PO BOX 232269 ANCHORAGE, AK 99523 PH: 907-563-1079 FAX: 907-563-9015

REVISION	BY	DATE
REVISED PER 95% COMMENTS	CM	1/09/14

Project No. ____
Date JAN. 2014
Designed ____
Drawn CM
Approved ____

Sheet No.
C2.4

G:\ACAD\CHEFORNAK\CYF1101 Sewage Lagoon\C2.1 Plan and Profiles.dwg, 2/27/2014 5:46:04 PM, cmerz, \\Ce2main\LANIER MP C2050/LD5200 PCL 6

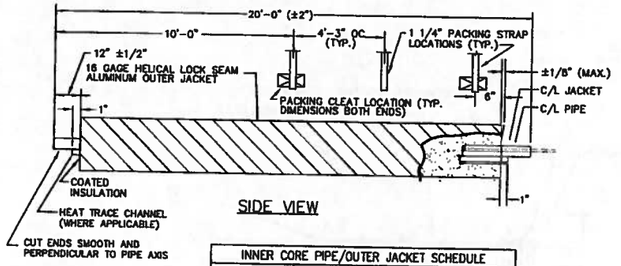

SIDE VIEW

INNER CORE PIPE/OUTER JACKET SCHEDULE		
NOMINAL CORE PIPE DIA.	INNER CORE PIPE O.D.	NOMINAL OUTER JACKET DIA.
4 INCH	4.50"	12 INCH
4 INCH	4.50"	15 INCH
8 INCH	8.625"	18 INCH

1 / C5.1 HDPE ARCTIC PIPE TYPICAL
N.T.S.

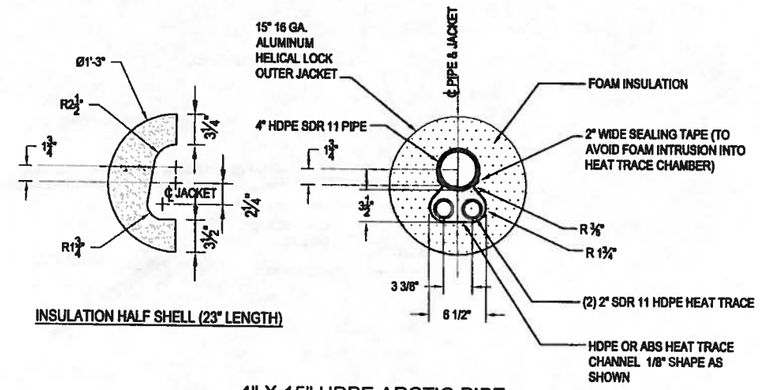

INSULATION HALF SHELL (23" LENGTH)

2 / C5.1 4" X 15" HDPE ARCTIC PIPE CROSS SECTION - GLYCOL TRACED
N.T.S.

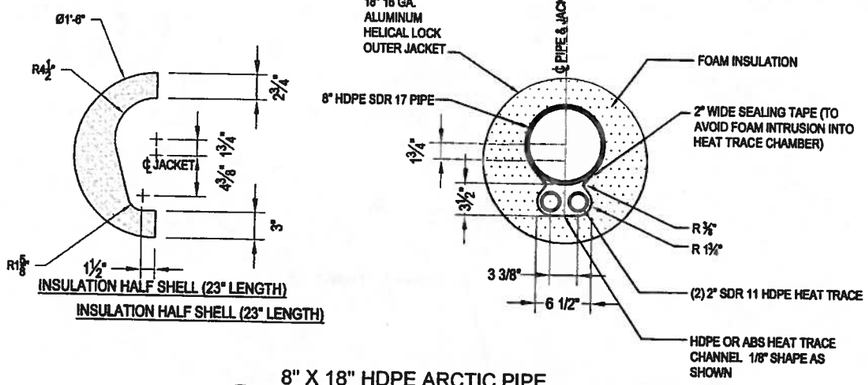

INSULATION HALF SHELL (23" LENGTH)

INSULATION HALF SHELL (23" LENGTH)

3 / C5.1 8" X 18" HDPE ARCTIC PIPE CROSS SECTION - GLYCOL TRACED
N.T.S.

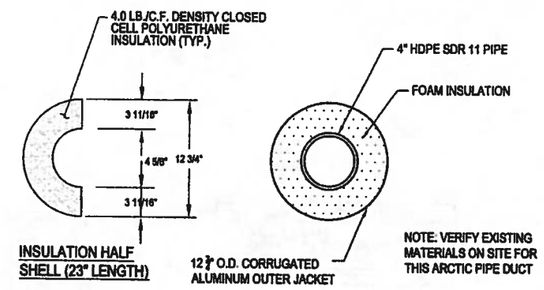

INSULATION HALF SHELL (23" LENGTH)

4 / C5.1 4" X 12" ARCTIC PIPE DUCT
N.T.S.

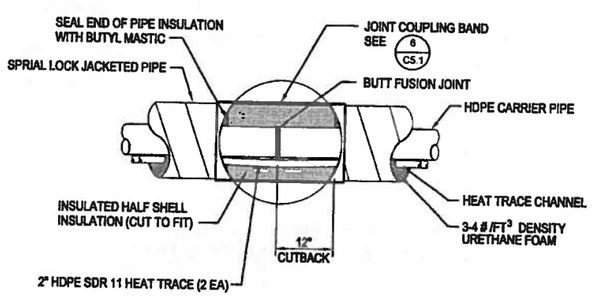

5 / C5.1 TYPICAL BUTT FUSION JOINT
N.T.S.

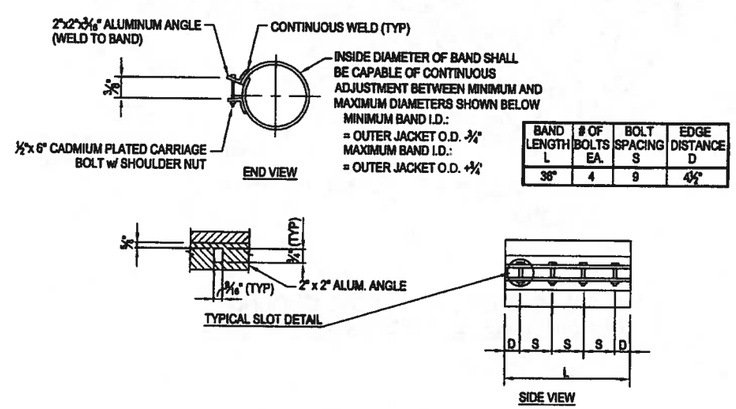

BAND LENGTH L	# OF BOLTS EA.	BOLT SPACING S	EDGE DISTANCE D
36"	4	9	4½"

6 / C5.1 ARCTIC PIPE COUPLING BAND
N.T.S.

RECORD DRAWING CERTIFICATE
THESE DRAWINGS REFLECT RECORDED INFORMATION OBTAINED DURING CONSTRUCTION. INFORMATION PROVIDED HEREIN IS ACCURATE TO THE BEST OF MY KNOWLEDGE.
NAME DATE

SCALE: AS SHOWN

BAR IS ONE INCH ON ORIGINAL DRAWING. IF NOT ONE INCH ON THIS SHEET, ADJUST SCALES ACCORDINGLY

CONSTRUCTION RECORD
FIELD BOOK
STAKING
FOREMAN
AS-BUILT
INSPECTOR

STATE OF ALASKA 49TH Michael R. Erdman No. 12262 REGISTERED PROFESSIONAL ENGINEER
7-28-2014

FACULTATIVE LAGOON
ARTIC PIPE DETAILS
CHEFORNAK, ALASKA

CE2 ENGINEERS, INC.
PO BOX 220560 ANCHORAGE, AK 99522 PH: 907-349-9010 FAX: 907-349-9015

REVISION	BY	DATE
REVISED PER 65% COMMENTS	CM	1/28/14

Project No. ____
Date JAN. 2014
Designed MRE
Drawn DDR
Approved MRE

Sheet No. C5.1

G:\ACAD\CHEFORNAK\CYF1101 Sewage Lagoon\C5.1 ARCTIC PIPE DETAILS rev 2.dwg, 2/27/2014 2:07:47 PM, cmerz, \\Ce2main\LANIER MP C2050/LDS20C PCL 6

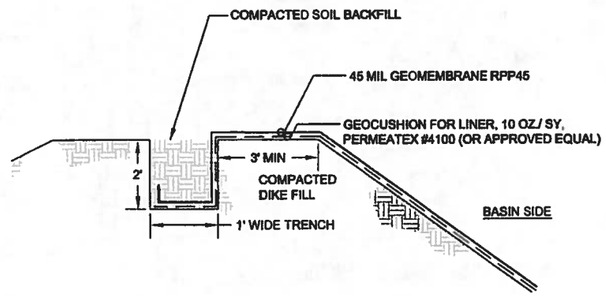

1 / C5.2 LINER KEY DETAIL
SCALE: NTS

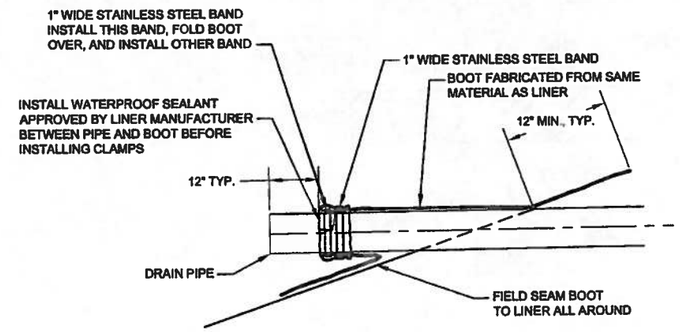

2 / C5.2 BOOT DETAIL
SCALE: NTS

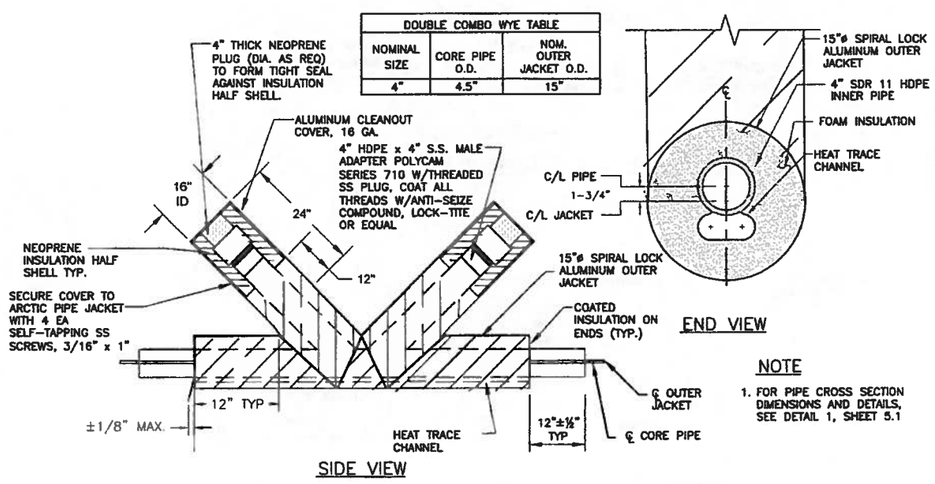

DOUBLE COMBO WYE TABLE		
NOMINAL SIZE	CORE PIPE O.D.	NOM. OUTER JACKET O.D.
4"	4.5"	15"

NOTE

1. FOR PIPE CROSS SECTION DIMENSIONS AND DETAILS, SEE DETAIL 1, SHEET 5.1

3 / C5.2 4" X 15" HDPE ARCTIC PIPE ABOVE GROUND FORCEMAIN DOUBLE WYE CLEANOUT DETAILS
SCALE: NTS

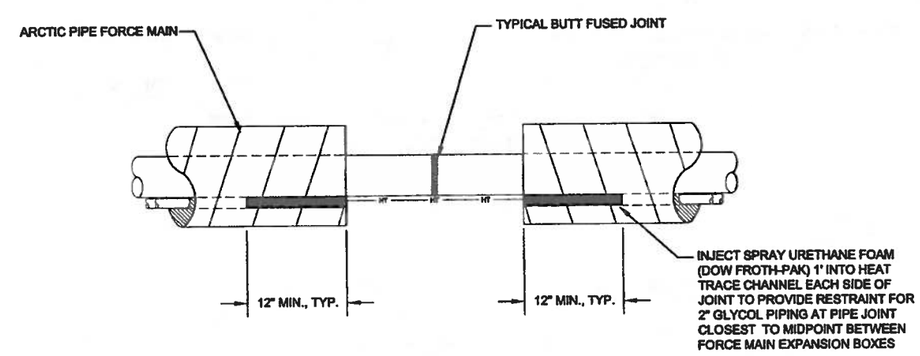

4 / C5.2 4" X 15" HDPE ARCTIC PIPE ABOVE GROUND FORCEMAIN MIDPOINT EXPANSION RESTRAINT
SCALE: NTS

RECORD DRAWING CERTIFICATE
THESE DRAWINGS REFLECT RECORDED INFORMATION OBTAINED DURING CONSTRUCTION. INFORMATION PROVIDED HEREIN IS ACCURATE TO THE BEST OF MY KNOWLEDGE.
NAME: DATE:

SCALE:
SAME AS ONE INCH ON ORIGINAL DRAWING
0 1"
IF NOT ONE INCH ON THIS SHEET, ADJUST SCALE ACCORDINGLY

CONSTRUCTION RECORD
FIELD BOOK
STADIAS
FOREMAN
AS-BUILT
INSPECTOR

STATE OF ALASKA
Michael R. Eastman
No. 6252
REGISTERED PROFESSIONAL ENGINEER
2-28-2014

FACULTATIVE LAGOON
LAGOON AND FORCE MAIN DETAILS
CHEFORNAK, ALASKA

CE2 ENGINEERS, INC.
PO BOX 230948 ANCHORAGE, AK 99523 PH: 907-349-9515 FAX: 907-349-9515

REVISION	BY	DATE
REVISED PER 65% COMMENTS	GM	1/22/14

Project No. ____ JAN. 2014
Date ____ MRE
Designed ____ RZ
Drawn ____ MRE
Approved ____

Sheet No.
C5.2

G:\ACAD\CHEFORNAK\CYF1101 Sewage Lagoon\C5.2 LAGOON_FORCEMAIN DETAILS.dwg, 2/28/2014 2:45:57 PM, cmerz, \\Ce2main\LANIER MP C2050\LD520C PCL 6

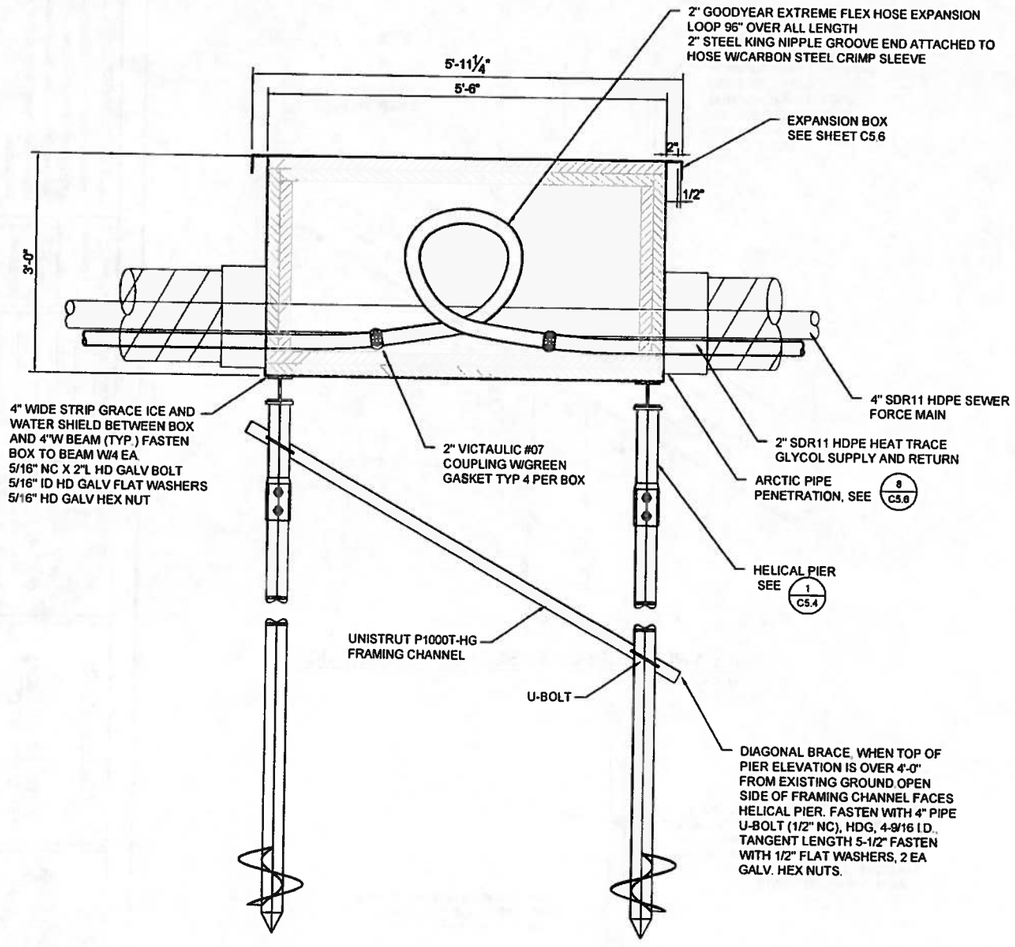

1/C5.3 EXPANSION BOX ELEVATION
1" = 2'-0"

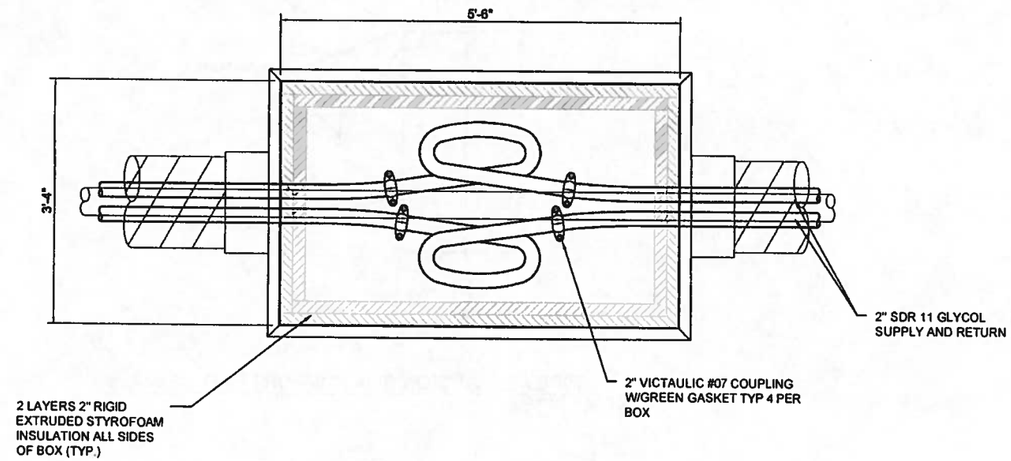

2/C5.3 EXPANSION BOX PLAN
1" = 2'-0"

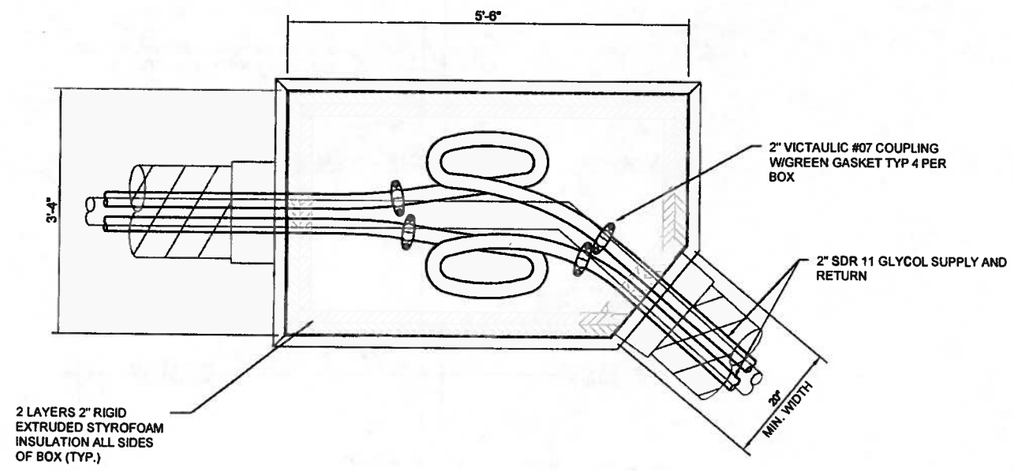

3/C5.3 EXPANSION BOX WITH ANGLED POINT - PLAN
1" = 2'-0"

RECORD DRAWING CERTIFICATE
THESE DRAWINGS REFLECT RECORDED INFORMATION OBTAINED DURING CONSTRUCTION. INFORMATION PROVIDED HEREIN IS ACCURATE TO THE BEST OF MY KNOWLEDGE.
NAME
DATE

SCALE: AS SHOWN
BAR IS ONE INCH ON ORIGINAL DRAWING
0 1"
IF NOT ONE INCH ON THIS SHEET, ADJUST SCALES ACCORDINGLY

CONSTRUCTION RECORD
FIELD BOOK
STAKING
FOREMAN
A.B.-B.L.T.
INSPECTOR

STATE OF ALASKA 49TH Michael K. Eckman No. 5202 REGISTERED PROFESSIONAL ENGINEER

2-28-2014

FACULTATIVE LAGOON
EXPANSION BOX AND DETAILS
CHEFORNAK, ALASKA

CE2 ENGINEERS, INC.
PO BOX 202948 ANCHORAGE, AK 99520 PH: 907-563-6130 FAX: 907-563-0155

REVISION	BY	DATE
REVISED PER 65% COMMENTS	CM	1/30/14

Project No. ____
Date JAN. 2014
Designed DWB/LAP
Drawn DWB
Approved PCW

Sheet No.
C5.3

G:\ACAD\CHEFORNAK\CYF1101 Sewage Lagoon\C5.3 EXPANSION BOX.dwg, 2/28/2014 3:57:10 PM, cmerz, \\Ce2main\LANIER HP C2050/LD520C PCL 6

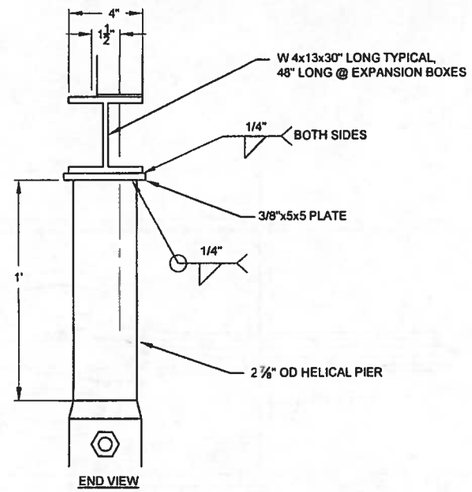

1 C5.4 PIPE / EXPANSION BOX SUPPORT END VIEW
SCALE: NTS

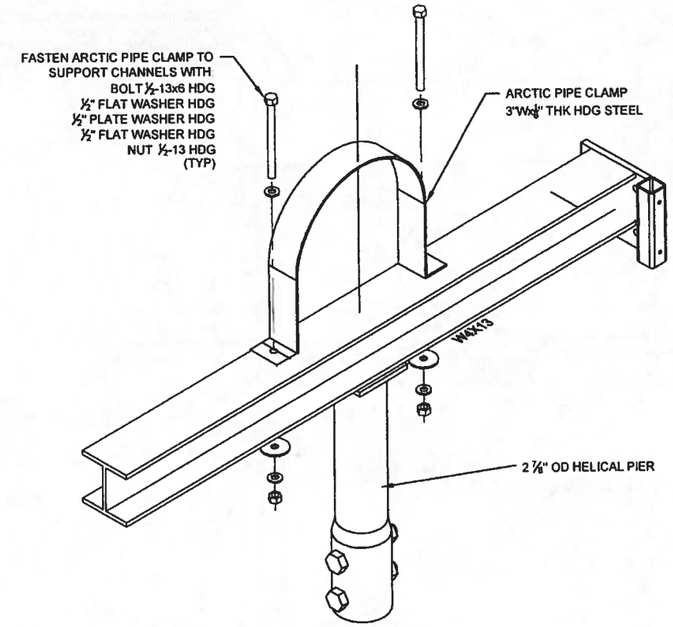

2 C5.4 PIPE SUPPORT ASSEMBLY ISOMETRIC
SCALE: NTS

NOTE

1. WHEN INSTALLING ANCHORS, DRIVE UNTIL 8,000 FT-LB IS MEASURED. ADD EXTENSION SHAFTS AS REQUIRED DEPTH TO FROZEN GROUND IS HIGHLY VARIABLE ALONG PIPELINE ROUTE MIN. 8' EMBEDMENT.
2. WHEN HEIGTH OF PIER EXCEEDS 3.5 FEET PROVIDE 2 EACH HELICAL PIERS SIMILAR TO DETAIL 1, SHEET C5.3

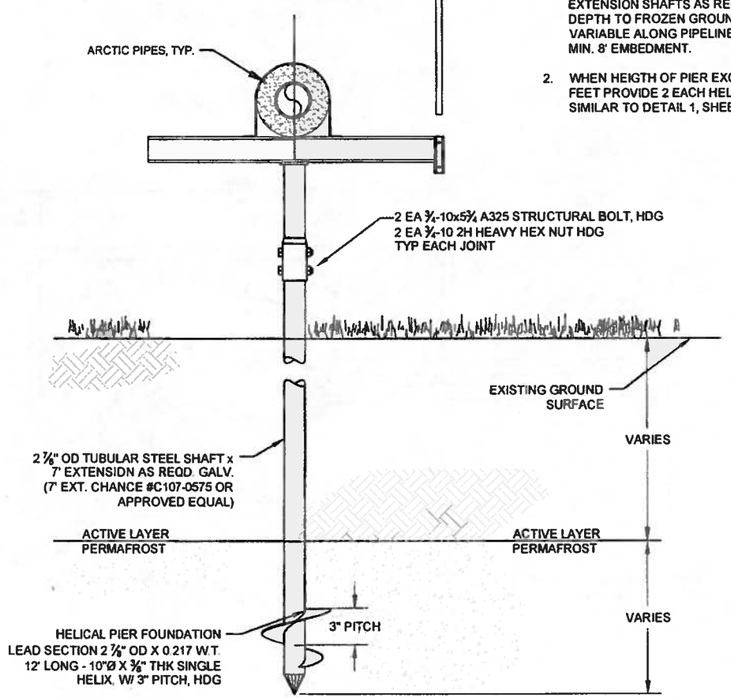

3 C5.4 PIPE / EXPANSION BOX HELICAL PIER DETAIL
SCALE: NTS

NOTE

PLACE MARKER POLES AND BRACKETS ON ENDS OF PIPE SUPPORT RUNS, INSIDE AND OUTSIDE OF DIRECTIONAL CHANGES IN ALIGNMENT, AND APPROX. 48' INTERVALS ON STRAIGHT RUNS. PLACE CLOSER AS LOCAL CONDITIONS NECESSITATE.

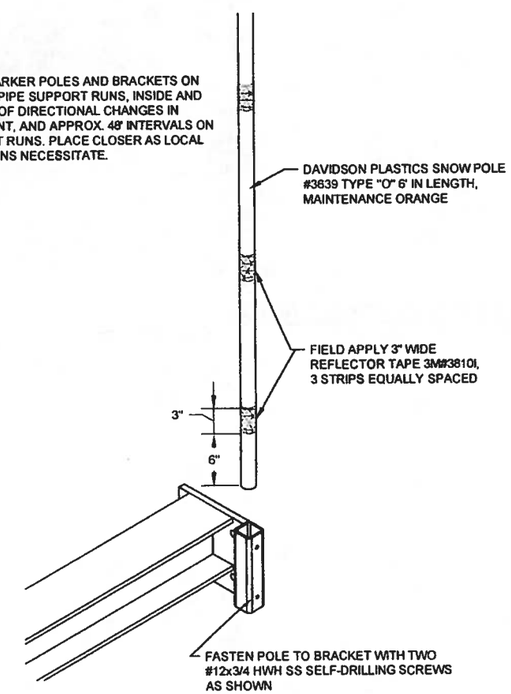

4 C5.4 SNOW POLE ASSEMBLY ISOMETRIC
SCALE: NTS

RECORD DRAWING CERTIFICATE
THESE DRAWINGS REFLECT RECORDED INFORMATION OBTAINED DURING CONSTRUCTION. INFORMATION PROVIDED HEREIN IS ACCURATE TO THE BEST OF MY KNOWLEDGE.
NAME DATE

SCALE: AS SHOWN

CONSTRUCTION RECORD
FIELD BOOK
STAKING
FOREMAN
AS-BUILT
INSPECTOR

STATE OF ALASKA 49TH Michael R. Erickson No.6262 REGISTERED PROFESSIONAL ENGINEER
2-28-2014

FACULTATIVE LAGOON
ARTIC PIPE HELICAL PIER SUPPORT DETAILS
CHEFORNAK, ALASKA

CE2 ENGINEERS, INC.
PO BOX 230568 ANCHORAGE, AK 99523 PH: 907-563-9115 FAX: 907-563-9215

REVISION	BY	DATE
REVISED PER 65% COMMENTS	CM	1/29/14

Project No. ____ JAN. 2014
Date ____ MRE
Designed ____ DDR
Drawn ____ MRE
Approved

Sheet No. C5.4

G:\ACAD\CHEFORNAK\CYF1101 Sewage Lagoon\C5.4 HELICAL PIERS.dwg, 2/28/2014 3:12:43 PM, cmerz, \\Ce2main\LANIER NP C2050/LD520C PCL 6

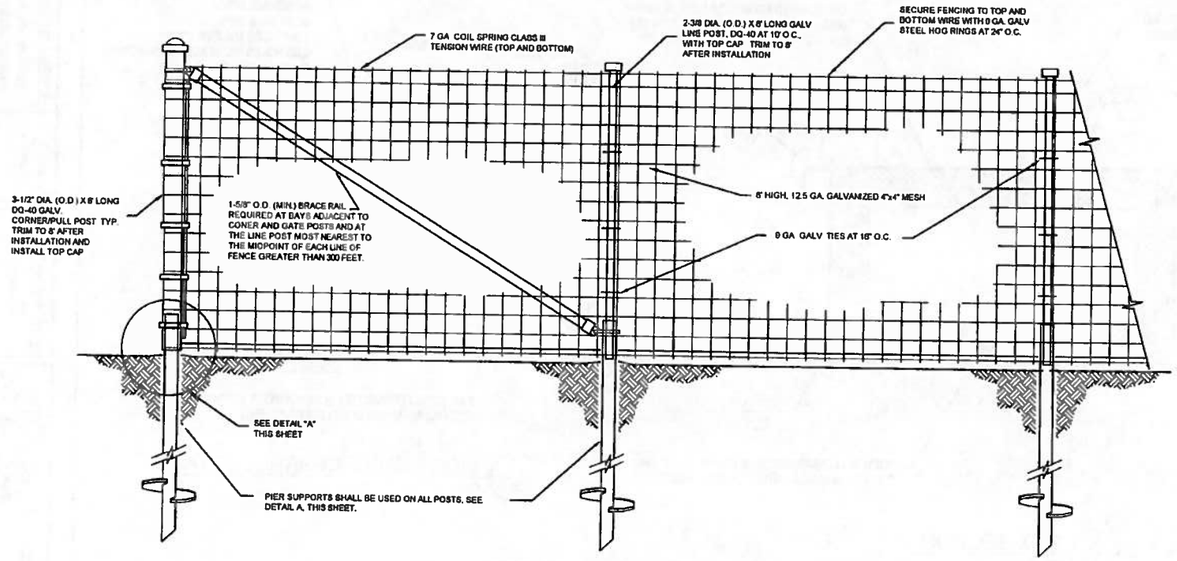

1 FENCE DETAIL (AT CORNER)

SCALE: NONE

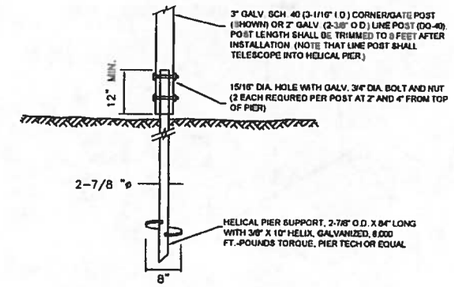

DETAIL A - FENCE POST SUPPORT

NTS

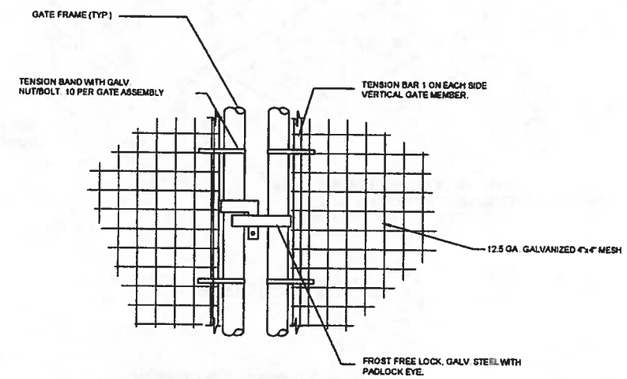

DETAIL B - GATE LATCH DETAIL

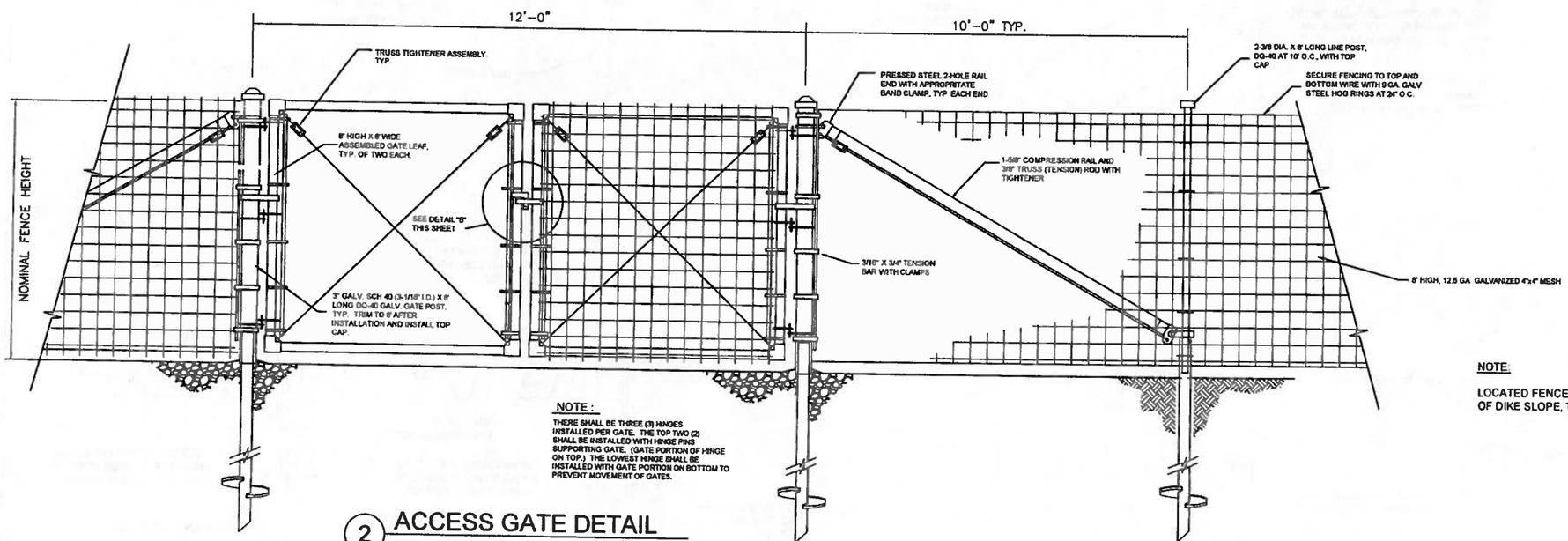

NOTE:

THERE SHALL BE THREE (3) HINGES INSTALLED PER GATE. THE TOP TWO (2) SHALL BE INSTALLED WITH HINGE PINS SUPPORTING GATE. (GATE PORTION OF HINGE ON TOP.) THE LOWEST HINGE SHALL BE INSTALLED WITH GATE PORTION ON BOTTOM TO PREVENT MOVEMENT OF GATES.

2 ACCESS GATE DETAIL

SCALE: NONE

NOTE:

LOCATED FENCE 6' FROM TOE OF DIKE SLOPE, TYPICAL

RECORD DRAWING CERTIFICATE

THESE DRAWINGS REFLECT RECORDED INFORMATION OBTAINED DURING CONSTRUCTION. INFORMATION PROVIDED HEREIN IS ACCURATE TO THE BEST OF MY KNOWLEDGE.

NAME DATE

SCALE: AS SHOWN

BARS ON THIS SHEET ARE 1" IN LENGTH. IF NOT ONE INCH ON THIS SHEET, ADJUST SCALES ACCORDINGLY

CONSTRUCTION RECORD

FIELD BOOK

STAKING

FOREMAN

AS-BUILT

INSPECTOR

STATE OF ALASKA 49TH Michael R. Eastman 10-22-2014 REGISTERED PROFESSIONAL ENGINEER

FACULTATIVE LAGOON

FENCING DETAILS

CHEFORNAK, ALASKA

CE2 ENGINEERS, INC.

PO BOX 93868 ANCHORAGE, AK 99509 PH: 907-349-3033 FAX: 907-349-3075

REVISION	BY	DATE
REVISED PER 65% COMMENTS	DM	1/29/14

Project No. ___
Date JAN. 2014
Designed PCW
Drawn CM
Approved PCW

Sheet No. C5.5

G:\ACAD\CHEFORNAK\CYF1101 Sewage Lagoon\C5.5 FENCE DETAILS.dwg, 2/28/2014 3:17:37 PM, cmerz, \\Ce2main\LANIER MP C2050/LDS20C PCL 6

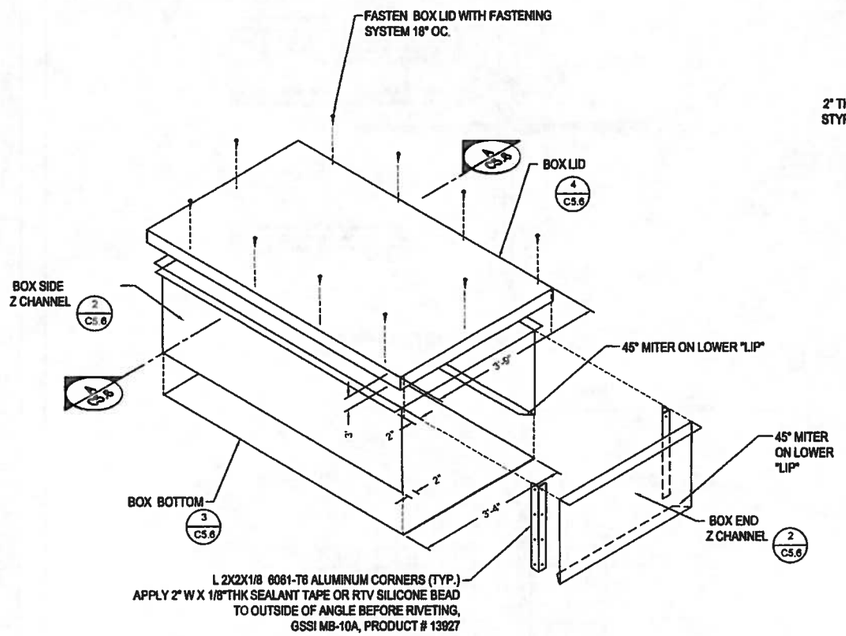

1 C5.6 BOX ISOMETRIC NTS

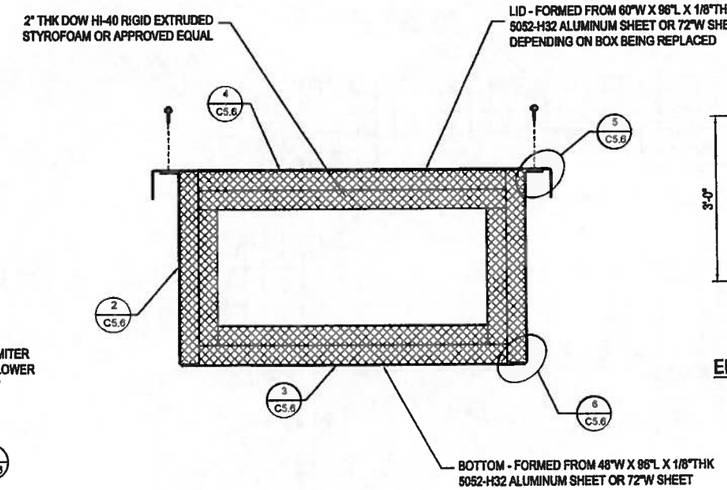

A C5.6 BOX SECTION NTS

NOTE: 45° MITER ON LOWER "LIP"

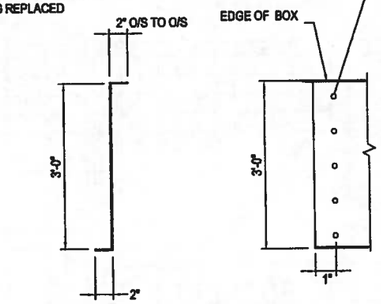

END VIEW

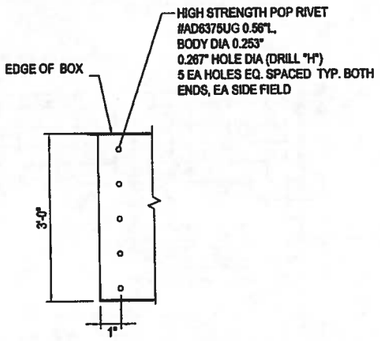

SIDE VIEW

Z SECTIONS FORMED FROM 24"W X 96"L X 1/8"THK 5052-H32 ALUMINUM SHEET OR 72"W SHEET

2 C5.6 SIDE & END Z-CHANNEL DETAILS NTS

NOTE:

1. ALL ALUMINUM SHALL BE 5052-H32 1/8" THICK, UNLESS OTHERWISE NOTED.
2. BOTTOM OF BOX WILL BE SEALED w/ 2"W X 1/8" THK SEALANT TAPE, GSSI MB-10A, PRODUCT #13927, OR RTV SILICONE BEAD
3. FOR FORCE MAIN ANGLE POINT BOXES, CHAMFER ONE END OF THE BOX AS SHOWN ON DETAIL3, SHEET C5.3

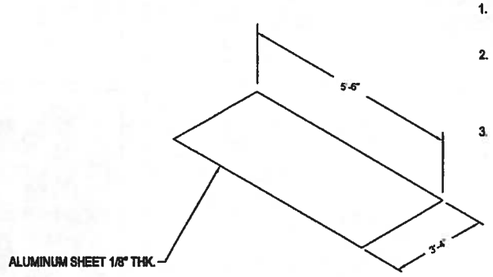

3 C5.6 BOTTOM SHEET DETAIL NTS

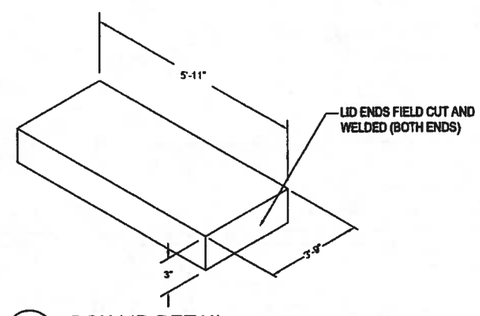

4 C5.6 BOX LID DETAIL NTS

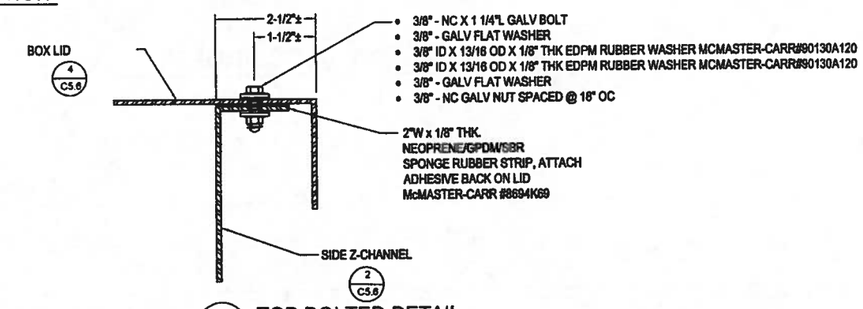

5 C5.6 TOP BOLTED DETAIL NTS

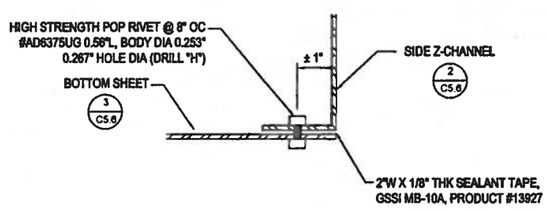

6 C5.6 BASE SEAM DETAIL NTS

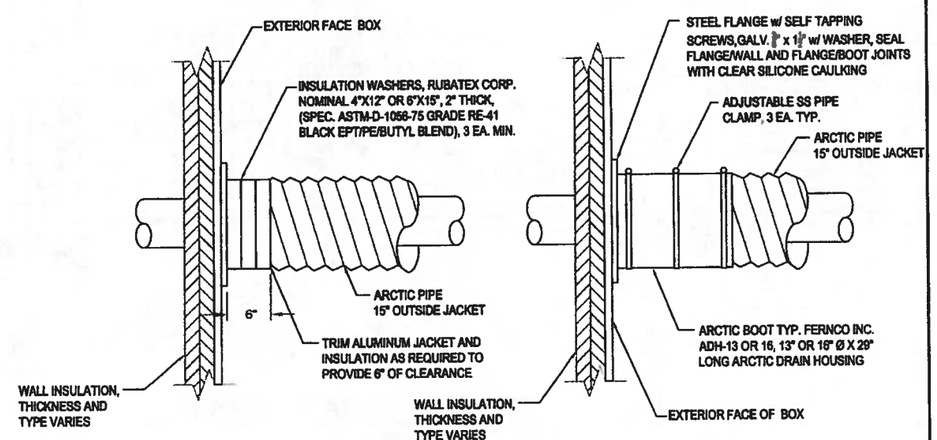

8 C5.6 PENETRATION DETAIL NTS

RECORD DRAWING CERTIFICATE
THESE DRAWINGS REFLECT RECORDED INFORMATION OBTAINED DURING CONSTRUCTION. INFORMATION PROVIDED HEREIN IS ACCURATE TO THE BEST OF MY KNOWLEDGE.
NAME
DATE

SCALE: AS SHOWN

BAR IS ONE INCH ON ORIGINAL DRAWING
0 1"
IF NOT ONE INCH ON THIS SHEET ADJUST SCALES ACCORDINGLY

CONSTRUCTION RECORD
FIELD BOOK
STAKING
FOREMAN
AS-BUILT
INSPECTOR

STATE OF ALASKA 49TH Michael R. Eckman No.6252 REGISTERED PROFESSIONAL ENGINEER
2-28-2014

FACULTATIVE LAGOON

JUNCTION / EXPANSION BOX ASSEMBLY DETAILS

CHEFORNAK, ALASKA

CE2 ENGINEERS, INC.
PO BOX 223249 ANCHORAGE, AK 99523 PH: 907-349-5310 FAX: 907-349-5315

REVISION	BY	DATE
REVISED PER 60% COMMENTS	CM	1/28/14

Project No. ___ Date JAN 2014
Designed PCW
Drawn LAW
Approved PCW

Sheet No. C5.6

G:\ACAD\CHEFORNAK\CYF1101 Sewage Lagoon\C5.6 Junction Box Details.dwg, 2/28/2014 3:22:52 PM, cmerz, \\Ce2main\LANIER MP C2050/LD520C PCL 6

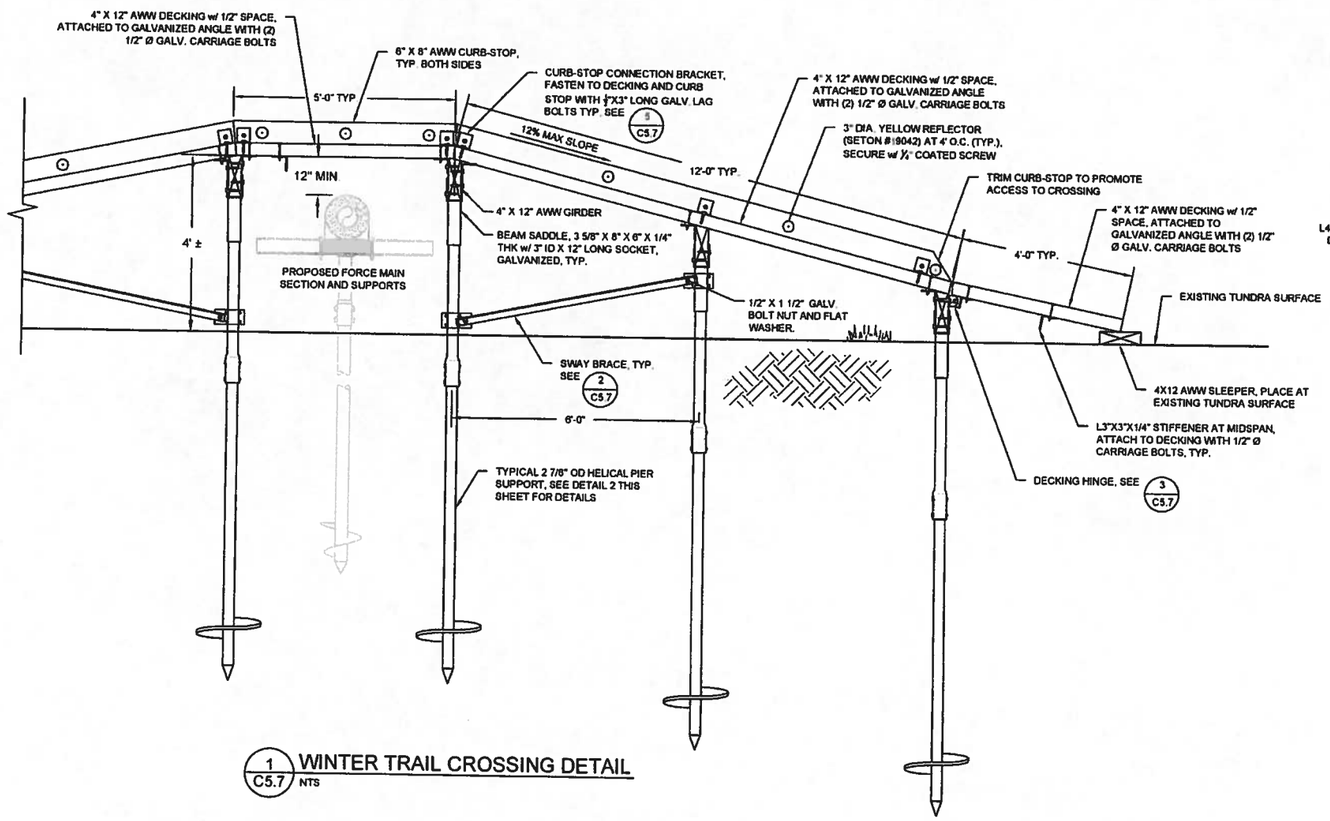

1/C5.7 WINTER TRAIL CROSSING DETAIL
NTS

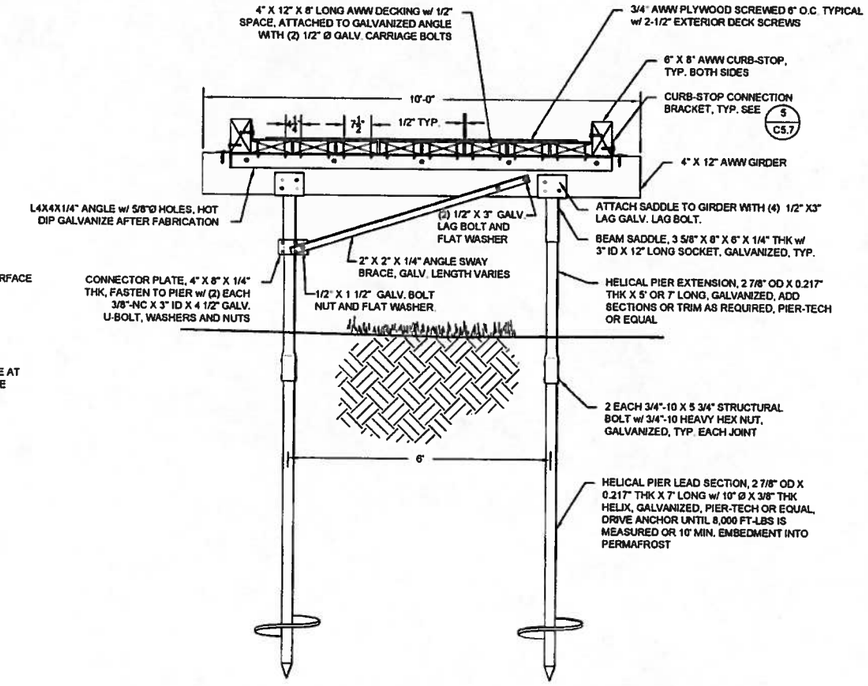

2/C5.7 WINTER TRAIL CROSSING SECTION
NTS

NOTES:

1. INSTALL HELICAL PIER SUPPORTS 6' O.C. AS REQUIRED TO MAINTAIN 1:12 MAX SLOPE TO EXISTING TUNDRA SURFACE.
2. HOT DIP GALVANIZE ALL ANGLES AND STIFFENERS AFTER FABRICATION.

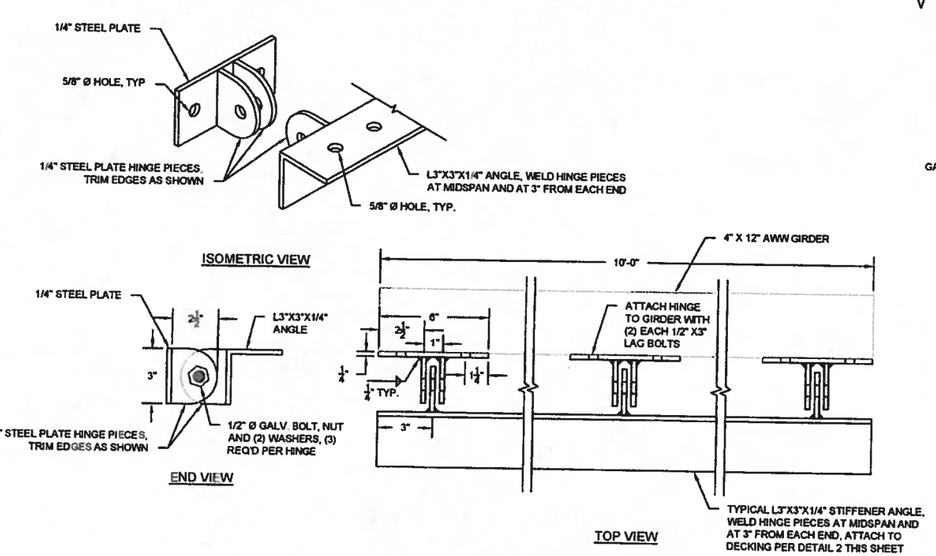

3/C5.7 DECKING HINGE DETAIL
NTS

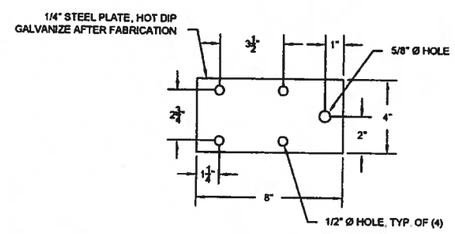

4/C5.7 CONNECTOR PLATE DETAIL
3"=1'-0"

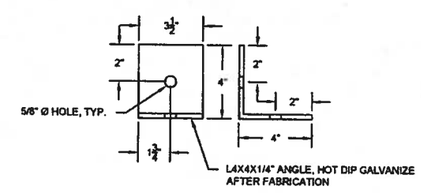

5/C5.7 CURB-STOP BRACKET DETAIL
3"=1'-0"

RECORD DRAWING CERTIFICATE
THESE DRAWINGS REFLECT RECORDED INFORMATION OBTAINED DURING CONSTRUCTION. INFORMATION PROVIDED HEREIN IS ACCURATE TO THE BEST OF MY KNOWLEDGE.
NAME DATE

SCALE: AS SHOWN
SHEET ONE INCH ON ORIGINAL DRAWING
IF NOT ONE INCH ON THIS SHEET, ADJUST SCALE ACCORDINGLY

CONSTRUCTION RECORD
FIELD BOOK
STAKING
FOREMAN
AS-BUILT
INSPECTOR

STATE OF ALASKA
Michael H. Erickson
No. 8262
REGISTERED PROFESSIONAL ENGINEER

FACULTATIVE LAGOON
WINTER TRAIL CROSSING DETAILS
CHEFORNAK, ALASKA

CE2 ENGINEERS, INC.
PO BOX 223249 ANCHORAGE, AK 99503 PH: 907-349-0108 FAX: 907-349-0115

REVISION	BY	DATE
REVISED PER 65% COMMENTS	CM	1/2014

Project No. ___
Date JAN. 2014
Designed DWB
Drawn DWB
Approved LAP

Sheet No. C5.7

2-28-2014

G:\ACAD\CHEFORNAK\CYF1101 Sewage Lagoon\C5.7_WINTER TRAIL CROSSING.dwg, 2/28/2014 3:39:17 PM, cmerz, \\Ce2main\LANIER HP C2050/LD520C PCL 6

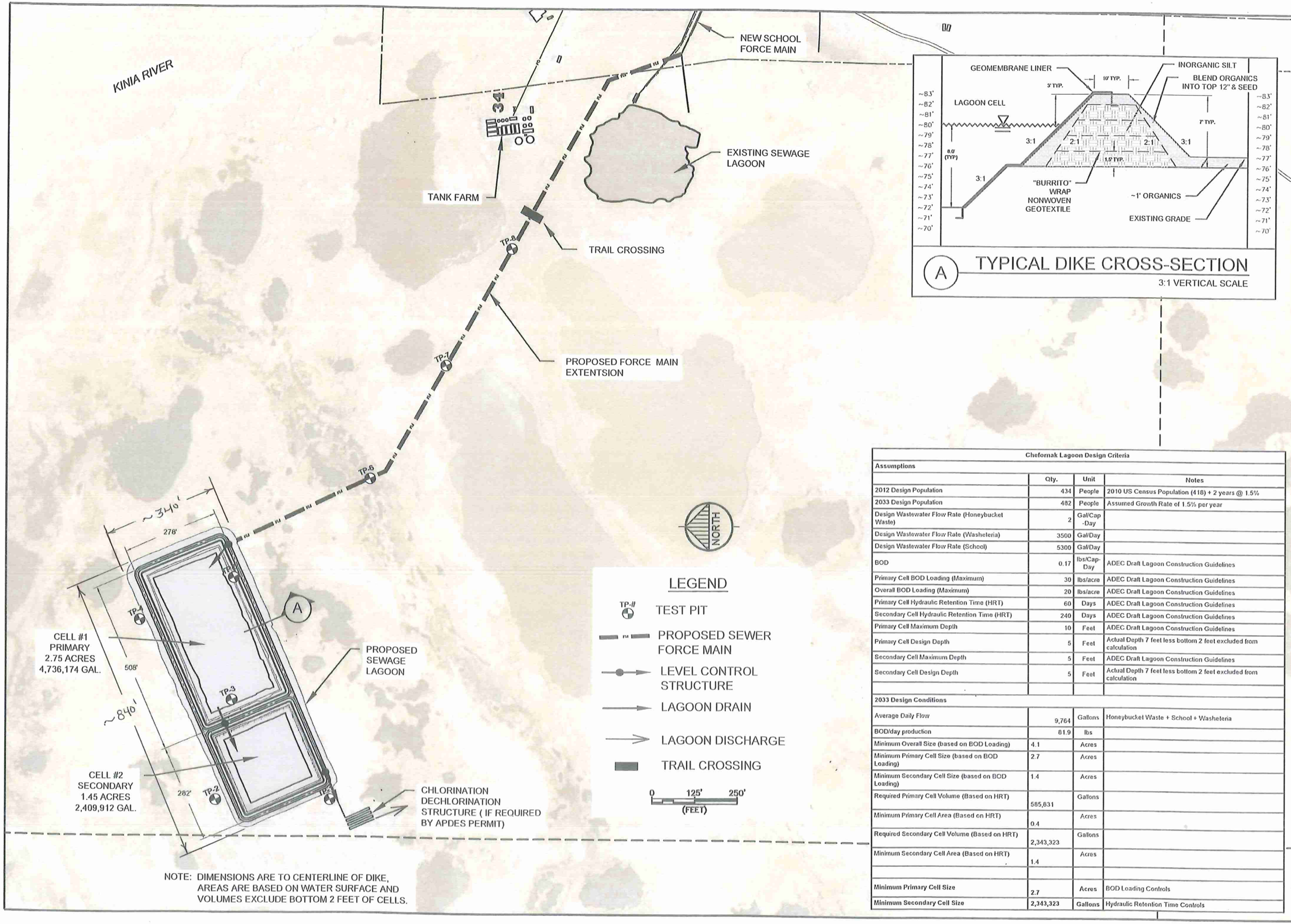

NOTE: DIMENSIONS ARE TO CENTERLINE OF DIKE, AREAS ARE BASED ON WATER SURFACE AND VOLUMES EXCLUDE BOTTOM 2 FEET OF CELLS.

Chefornak Lagoon Design Criteria			
Assumptions			
	Qty.	Unit	Notes
2012 Design Population	434	People	2010 US Census Population (418) + 2 years @ 1.5%
2033 Design Population	482	People	Assumed Growth Rate of 1.5% per year
Design Wastewater Flow Rate (Honeybucket Waste)	2	Gal/Cap -Day	
Design Wastewater Flow Rate (Washeteria)	3500	Gal/Day	
Design Wastewater Flow Rate (School)	5300	Gal/Day	
BOD	0.17	lbs/Cap-Day	ADEC Draft Lagoon Construction Guidelines
Primary Cell BOD Loading (Maximum)	30	lbs/acre	ADEC Draft Lagoon Construction Guidelines
Overall BOD Loading (Maximum)	20	lbs/acre	ADEC Draft Lagoon Construction Guidelines
Primary Cell Hydraulic Retention Time (HRT)	60	Days	ADEC Draft Lagoon Construction Guidelines
Secondary Cell Hydraulic Retention Time (HRT)	240	Days	ADEC Draft Lagoon Construction Guidelines
Primary Cell Maximum Depth	10	Feet	ADEC Draft Lagoon Construction Guidelines
Primary Cell Design Depth	5	Feet	Actual Depth 7 feet less bottom 2 feet excluded from calculation
Secondary Cell Maximum Depth	5	Feet	ADEC Draft Lagoon Construction Guidelines
Secondary Cell Design Depth	5	Feet	Actual Depth 7 feet less bottom 2 feet excluded from calculation
2033 Design Conditions			
Average Daily Flow	9,764	Gallons	Honeybucket Waste + School + Washeteria
BOD/day production	81.9	lbs	
Minimum Overall Size (based on BOD Loading)	4.1	Acres	
Minimum Primary Cell Size (based on BOD Loading)	2.7	Acres	
Minimum Secondary Cell Size (based on BOD Loading)	1.4	Acres	
Required Primary Cell Volume (Based on HRT)	585,831	Gallons	
Minimum Primary Cell Area (Based on HRT)	0.4	Acres	
Required Secondary Cell Volume (Based on HRT)	2,343,323	Gallons	
Minimum Secondary Cell Area (Based on HRT)	1.4	Acres	
Minimum Primary Cell Size	2.7	Acres	BOD Loading Controls
Minimum Secondary Cell Size	2,343,323	Gallons	Hydraulic Retention Time Controls

FIGURE 1

CHEFORNAK WASTEWATER LAGOON & FORCEMAIN DAR

PROPOSED (2 CELL) WASTEWATER LAGOON

CHEFORNAK, ALASKA

Scale: SEE GRAPHIC

Date: DEC. 2013

Drawn: CM

CE2 ENGINEERS, INC.

G:\ACAD\CHEFORNAK\CYF1101 Sewage Lagoon\Fig 1 Lagoon Layout Latest DEC 2013.dwg, 12/13/2013 1:46:50 PM, cmerz, LANIER MP C2050_LD520C PCL 6 (temporary).pc3

CITY OF CHEFORNAK, ALASKA
2013 WATER DISTRIBUTION AND WATERING POINTS UPGRADES

IN COOPERATION WITH STATE OF ALASKA
VILLAGE SAFE WATER AND THE CITY OF
CHEFORNAK, ALASKA

ISSUED FOR CONSTRUCTION - MAY 2013

PROJECT LOCATION

Location Map

CE2 ENGINEERS, INC.
PO BOX 232946 ANCHORAGE, AK 99523 PH: 907-349-1010 FAX: 907-349-1015

STATE OF ALASKA 49TH PAUL C. WESNER CE-10276 REGISTERED PROFESSIONAL ENGINEER

5-23-2013

Consultant

RECORD DRAWING CERTIFICATE

THESE DRAWINGS REFLECT RECORDED INFORMATION OBTAINED DURING CONSTRUCTION.
INFORMATION PROVIDED HEREIN IS ACCURATE TO THE BEST OF MY KNOWLEDGE.

NAME DATE

Construction Foreman _____

FINAL DESIGN (Date) _____

ADEC APPROVAL (Date) _____

Construction Period (From) _____ (To) _____

As-Builts (Date) _____

SHEET INDEX

No.	Title
	COVER SHEET AND DRAWING INDEX
G1.0	GENERAL NOTES
C1.1	SITE PLAN
C1.2	UPGRADED WATERING POINT
C1.3	WATERING POINT ENCLOSURE CONSTRUCTION
C1.4	WATERING POINT ELEVATIONS
C2.1	JUNCTION BOX CONSTRUCTION DETAILS
C2.2	ARCTIC PIPE AND JUNCTION BOX DETAILS
E1	ELECTRICAL

G:\ACAD\CHEFORNAK\2013 WATER DIST. UPGRADES\COVER.dwg, 5/23/2013 1:18:09 PM, cmerz, \\Ce2main\LANIER MP C2050/LD520C PCL 6

GENERAL NOTES

A. GENERAL

1. THE PROJECT SUPERINTENDENT SHALL MAINTAIN A CLEAN SET OF 'AS-BUILT' RECORD DRAWINGS SHOWING THE LOCATIONS AND SWING TIES OF ANY CHANGES TO THE ORIGINAL PLANSET, AS WELL AS ANY BURIED OR HIDDEN BENDS. ALL ELEVATIONS SHALL BE MARKED ASB (AS-BUILT) WITH THE CORRECT VALUE INSERTED. DRAWINGS SHALL BE KEPT CURRENT IN RED PENCIL ON A DAILY BASIS IN A NEAT, LEGIBLE FASHION. A COPY OF THE AS-BUILT DRAWINGS SHALL BE SUBMITTED TO VILLAGE SAFE WATER AND THE CITY OF CHEFORNAK UPON COMPLETION OF CONSTRUCTION.

2. EXISTING UTILITIES` OF THE ENGINEER AT THE TIME OF DESIGN. RECORDS MAY NOT BE COMPLETELY ACCURATE. THE PROJECT SUPERINTENDENT SHALL VERIFY HORIZONTAL AND VERTICAL LOCATIONS OF UTILITIES WITHIN EACH CONSTRUCTION REACH PRIOR TO BEGINNING WORK.

   WATER AND SEWER UTILITY: CITY OF CHEFORNAK (907) 867-8147

   ELECTRIC POWER PROVIDER: NATERKAQ ELECTRIC (907) 867-8213

   TELEPHONE UTILITY: GCI (800) 800-4800

3. STATIONING IS ESTABLISHED ALONG THE PIPELINE AND UTILIDOR ROUTING AS SHOWN.

4. THE CONSTRUCTION CREW SHALL AVOID EXISTING PROPERTY CORNER MARKERS AND SURVEY MONUMENTS TO THE EXTENT POSSIBLE. PROPERTY CORNERS DISTURBED DURING CONSTRUCTION ACTIVITIES SHALL BE RESET TO THEIR ORIGINAL POSITIONS BY A QUALIFIED SURVEYOR.

B. PIPE

1. GENERAL:
   ALL PIPING AND FITTINGS SHALL BE NSF-61 COMPLIANT WHERE SUCH PIPING AND FITTINGS ARE IN CONTACT WITH RAW OR POTABLE WATER IN THE WATER TREATMENT OR DISTRIBUTION PROCESS. ALL PIPING SHALL BE LEAD FREE ALL PLUMBING USING SOLDERED JOINTS SHALL USE A SOLDER CERTIFIED TO NOT TO CONTAIN LEAD (BRIDGET OR EQUAL)

2. HDPE MATERIAL:
   A) LISTED BY THE PPI WITH DESIGNATION OF PE-3408
   B) CELL CLASSIFICATION OF 345434C OR BETTER IN ACCORDANCE WITH ASTM D3350
   C) MUST EXCEED 1000 HOURS WHEN TESTED IN ACCORDANCE WITH ASTM F1248 RING ENVIRONMENTAL STRESS CRACK RESISTANCE TEST) WITH FEWER THAN 50 PERCENT FAILURES.
   D) APPROVED BY THE NATIONAL SANITATION FOUNDATION (NSF) FOR POTABLE WATER SERVICE.
   E) SHALL CONTAIN TWO PERCENT (2%) CARBON BLACK FOR ULTRAVIOLET (UV) PROTECTION AND SHALL BE HOMOGENEOUS THROUGHOUT.

3. EXTRUDED PIPE:
   A) COMPLY WITH ASTM F714-90
   B) STANDARD IRON PIPE SIZE OUTSIDE DIMENSIONS
   C) STANDARD DIMENSION RATIO AS SHOWN BELOW WITH PRESSURE RATINGS (IN ACCORDANCE WITH ASTM D2837 AT 73° WITH A SERVICE FACTOR OF 0.5) AS FOLLOWS:

STANDARD DIMENSION RATIO	PRESSURE RATING (PSI)
SDR 11	160

   D) IMPACT STRENGTH MUST BE GREATER THAN 42 LB/IN BY ASTM D256 (ISOD IMPACT TEST)

4. FITTINGS:
   A) UNLESS OTHERWISE NOTED HEREIN OR ON THE DRAWINGS, ALL FITTINGS SHALL BE CONSTRUCTED UTILIZING INNER CORE OF THE SAME MATERIAL, RESIN, AND DIMENSIONS AS THAT USED FOR THE INNER CORE PIPE OF THE STRAIGHT LENGTHS.
   B) IF THE INNER CORE OF A FITTING IS FABRICATED AS OPPOSED TO MOLDED THE FABRICATED FITTING SHALL BE ENCASED IN FIBERGLASS WRAP WITH A MINIMUM THICKNESS OF 1/4 INCH PRIOR TO FOAMING. THE FIBERGLASS ENCASEMENT IS REQUIRED TO GIVE THE FITTINGS ADDED STRENGTH.

C. PIPELINE TESTING

1. GENERAL
   ALL TESTING SHALL BE IN CONFORMANCE WITH THE FOLLOWING REQUIREMENTS:

   ALL TESTS SHALL BE WITNESSED BY A REPRESENTATIVE DESIGNATED BY THE OWNER. UPON SUCCESSFUL COMPLETION OF A TEST, THE RESULTS OF THE TEST SHALL BE DOCUMENTED ON A TEST FORM AND ACKNOWLEDGED BY SIGNATURE OF THE COMMUNITY'S REPRESENTATIVE WITNESSING THE TEST AND BY THE PROJECT SUPERINTENDENT. THE SUPERINTENDENT'S RED LINED AS-BUILT DRAWINGS SHALL ALSO NOTE THE TIME AND DATE OF THE TEST, AS WELL AS THE NAME OF THE COMMUNITY'S WITNESS, FOR EACH PIPE SEGMENT TESTED.

2. WATER MAIN TESTING
   ALL PIPE JOINTS SHALL BE VISUALLY INSPECTED FOR INTEGRITY PRIOR TO BACKFILLING THE TRENCH OR INSTALLING INSULATION HALF-SHELLS OR COUPLING BANDS. ALL NEWLY INSTALLED WATER MAINS SHALL BE OPEN BORE FLUSHED TO REMOVE ANY FOREIGN MATTER. OPEN BORE FLUSHING SHALL BE ACCOMPLISHED AT EACH EXTREMITY OF THE MAIN, PRIOR TO SERVICE LINE INSTALLATION, HYDROSTATIC (PRESSURE) TESTING AND DISINFECTION. PERFORM HYDROSTATIC TESTING OF WATERMAINS. AFTER OPEN BORE FLUSHING AND BEFORE DISINFECTION (SEE ITEM E BELOW). FILL THE LINE WITH WATER AND REMOVE AIR POCKETS PRIOR TO STARTING THE TEST. PRESSURIZE TO 1.5 TIMES THE OPERATING PRESSURE = 105 PSI AND LEAVE FOR A MINIMUM OF 1 HOUR. AFTER THIS INITIAL PERIOD, ADD WATER TO BRING THE PRESSURE UP TO 105 PSI AND BEGIN A 1 HOUR TEST. FOR THE WATERLINE TO BE ACCEPTED, THE MAKE-UP WATER REQUIRED TO RETURN THE PRESSURE TO 105 PSI AT THE END OF THE TEST PERIOD SHALL NOT BE GREATER THAN 0.2 GALLONS PER 100 FT OF 3" WATERMAIN.

D. WATERMAIN DISINFECTION

1. DISINFECTION SHALL BE ACCOMPLISHED AFTER COMPLETION OF OPEN BORE FLUSHING, SERVICE LINE INSTALLATION AND HYDROSTATIC TESTING OPERATIONS. CHLORINE SHALL BE USED FOR DISINFECTION. CHLORINE SHALL BE APPLIED BY THE CALCIUM HYPOCHLORITE AND WATER MIXTURE METHOD. CALCIUM HYPOCHLORITE SHALL BE COMPARABLE TO COMMERCIAL PRODUCTS KNOWN AS HTH, PERCHLOR OR MACHOCHLOR. THE CHLORINATING AGENT SHALL BE APPLIED AT THE BEGINNING OF THE SECTION, ENSURING TREATMENT OF THE ENTIRE LINE. WATER SHALL BE FED SLOWLY INTO THE NEW LINE WITH CHLORINE APPLIED IN AMOUNTS TO PRODUCE A DOSAGE OF FORTY (40) PPM TO FIFTY (50) PPM. A CHLORINATION DOSAGE OF 0.30 OZ OR 38 GRAMS PER 100 FEET SHALL BE USED FOR 3" DIAMETER PIPES. IF A DIFFERENT CHLORINATING AGENT IS USED, THE DOSAGE MUST BE ADJUSTED AND APPROVED BY THE ENGINEER. APPLICATION OF THE CHLORINE SOLUTION SHALL CONTINUE UNTIL THE REQUIRED DOSAGE IS EVIDENT AT ALL EXTREMITIES OF THE NEWLY INSTALLED LINE.

2. DURING THE CHLORINATION PROCESS, ALL INTERMEDIATE VALVES AND ACCESSORIES SHALL BE OPERATED. VALVES SHALL BE MANIPULATED SO THAT THE STRONG CHLORINE SOLUTION IN THE LINE BEING TREATED WILL NOT FLOW BACK INTO THE LINE SUPPLYING THE WATER. HYDROSTATIC TESTING OF A WATER LINE CONTAINING THE CHLORINE MIXTURE WILL NOT BE ALLOWED.

3. A RESIDUAL OF NOT LESS THAN FIVE (5) PPM CHLORINE SHALL BE PRODUCED IN ALL PARTS OF THE WATER SYSTEM (MAIN AND SERVICES) AND RETAINED FOR A MINIMUM PERIOD OF TWENTY-FOUR (24) HOURS. AFTER WHICH THE CHLORINATED WATER SHALL BE FLUSHED FROM THE LINE AT ITS EXTREMITIES UNTIL THE REPLACEMENT WATER TESTS ARE EQUAL CHEMICALLY TO THOSE OF THE PERMANENT SOURCE OF SUPPLY. EACH INDIVIDUAL SERVICE SHALL BE FLUSHED SEPARATELY TO REMOVE CHLORINE SOLUTION. IN NO INSTANCE SHALL A WATER MAIN BE CHLORINATED BEFORE "OPEN-BORE" FLUSHING. AFTER FLUSHING, DRAW A SAMPLE FROM THE EXTREMITY OF DISTRIBUTION SYSTEM FOR TOTAL COLIFORM TESTING AT A STATE CERTIFIED LABORATORY. DO NOT COMMISSION THE NEW CONSTRUCTION UNTIL A NEGATIVE BACTERIOLOGICAL REPORT IS OBTAINED FROM THE LABORATORY.

4. HEAVILY CHLORINATED WATER SHALL BE NEUTRALIZED WITH A SOLUTION OF SODIUM BISULFIT E OR SODIUM SULFITE AT A RATE TABULATED IN APPENDIX B OF AWWA C651. THE SUPERINTENDENT IN CHARGE OF THE DISINFECTION AND FLUSHING OF THE LINES SHALL HAVE A COPY OF AWWA C651-05 ON SITE FOR READY REFERENCE.

E. WATERING POINTS DISINFECTION

1. DISINFECT WATERING POINTS PIPING WHEN DISINFECTING THE WATER MAINS BY DIRECTING SUPERCHLORINATED WATER IN THE MAINS TO WATERING POINT DELIVERY AND 1-1/2" HOSE OUTLET THROUGH VALVES.

F. JUNCTION BOXES ON WATER DISTRIBUTION PIPING

1. JUNCTION BOX SHELLS SHALL BE CONSTRUCTED PER PLANS, MATERIAL SHALL BE ⅛" ASTM 5052-H32 ALUMINUM UNLESS OTHERWISE NOTED.

2. JUNCTION BOX INSULATION SHALL BE RIGID POLYSTYRENE CLOSED CELL TYPE BOARD INSULATION, DOW HI-40 OR APPROVED EQUAL.

3. JUNCTION BOXES SHALL BE FIELD LOCATED.

F. SERVICE INTERUPTIONS

1. CONSTRUCTION SUPERINTENDANT SHALL SCHEDULE WATER SERVICE INTERUPTIONS WITH THE CITY OF CHEFORNAK.

DESIGN CRITERIA

DESIGN POPULATION	500 PERSONS
AVERAGE DESIGN WATER DEMAND	10,800 GPD (7.5 GPM AVE.)
PEAK FLOW RATE (4 x AVG.)	30 GPM
DESIGN SNOWLOAD Ps	40 PSF (2 MONTH DURATION)
WIND SPEED	130 MPH, EXPOSURE C
SEISMIC DATA:	SITE CLASS D, S_{DS}= 0.15 - S_{D1} = 0.07
DESIGN TEMP/WIND SPEED	-45° F, 25 MPH
SYSTEM WATER TEMP	45° F
HEATING INDEX	13,300 DEG (F) DAYS/YR.
DESIGN FREEZING INDEX	4,200 DEG (F) DAYS/YR.
DESIGN THAWING INDEX	2,700 DEG (F) DAYS/YR.
HEATING VALUE OF NO. 1 FUEL OIL	134,000 BTU/GAL. GROSS OUTPUT

SCOPE OF PROJECT

WATERING POINT UPGRADES

THIS PROJECT WILL PERFORM UPGRADES OF A TOTAL OF 12 WATERING POINTS BY REPLACING THE EXISTING WOOD FRAMED ENCLOSURES WITH WELDED AND BOLTED ALUMINUM ENCLOSURES WITH 4-IN THICK FOAM INSULATION, MAKING FOR A HIGHLY ENERGY EFFICIENT DISPENSING POINT. TWO OF THE 12 WATERING POINTS ARE BEING UPGRADED WITH PROTOTYPE ALUMINUM UNITS, WITH ONE ALREADY IN PLACE. ONE WATERING POINT EXISTS AT THE WATER TREATMENT PLANT AND WILL JUST HAVE HOSE AND INTERNALS UPGRADED.

WATER DISTRIBUTION UPGRADES

THE EXISTING WATER DISTRIBUTION SYSTEM TO THE WATERING POINTS AND THE SCHOOL WILL HAVE THE FOLLOWING UPGRADES:

- EXISTING WOOD FRAMED JUNCTION BOXES WILL BE UPGRADED TO ALUMINUM BOXES WITH 4-IN THICK FOAM INSULATION, MAKING THEM MUCH MORE ENERGY EFFICIENT.
- EXISTING EXPANSION HOSES WILL BE REPLACED BY NEW HOSES (NSF 61 CERTIFIED), BUT WITH MORE STREAMLINED JOINTS, WITH THE ABILITY TO BLEED AIR FROM EACH LINE.

RECORD DRAWING CERTIFICATE
THESE DRAWINGS REFLECT RECORDED INFORMATION OBTAINED DURING CONSTRUCTION. INFORMATION PROVIDED HEREIN IS ACCURATE TO THE BEST OF MY KNOWLEDGE.
NAME DATE

SCALE:
BAR IS ONE INCH ON ORIGINAL DRAWING 0 1"
IF NOT ONE INCH ON THIS SHEET, ADJUST SCALES ACCORDINGLY

CONSTRUCTION RECORD
FIELD BOOK
STAKING
FOREMAN
AS-BUILT
INSPECTOR

STATE OF ALASKA 49TH PAUL C. WEISNER CE-10276 REGISTERED PROFESSIONAL ENGINEER
5-23-2013

2013 WATER DISTRIBUTION AND WATERING POINTS
GENERAL NOTES AND DESIGN CRITERIA
CHEFORNAK, ALASKA

CE2 ENGINEERS, INC.
PO BOX 232946 ANCHORAGE, AK 99523 PH: 907-349-1010 FAX: 907-349-1015

REVISION | BY | DATE

Project No.
Date APRIL 2013
Designed
Drawn
Approved

Sheet No.
G1.0
SHEET ____ OF ____

G:\ACAD\CHEFORNAK\2013 WATER DIST _UPGRADES\G1.0.dwg, 5/23/2013 5:21:42 PM, cmerz, \\Ce2main\LANIER MP C2050/LD520C PCL 6

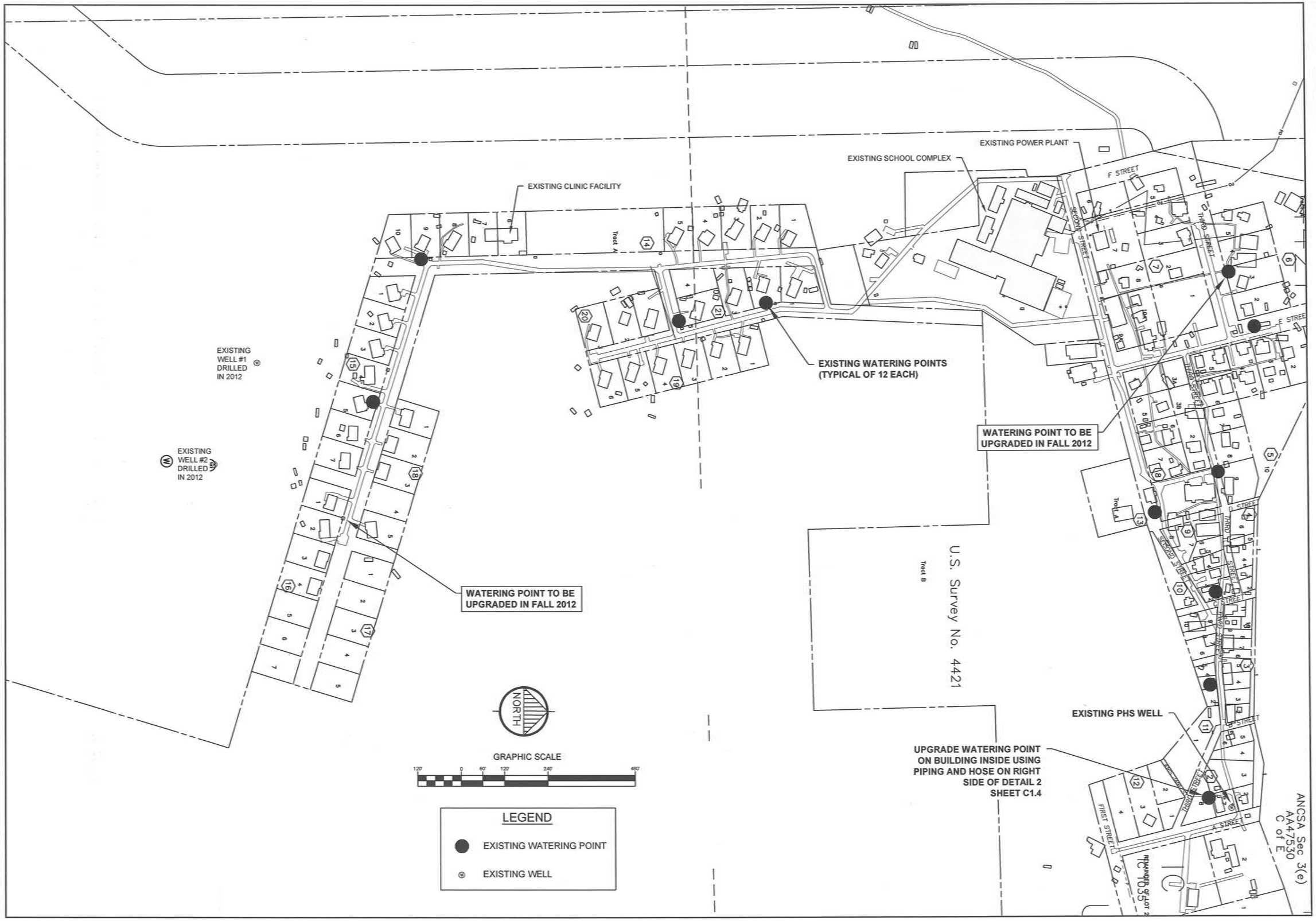

G:\ACAD\CHEFORNAK\2013 WATER DIST _UPGRADES\C1.1 Site Plan.dwg, 4/21/2013 2:39:01 PM, Flash, \\CE2MAIN\LANIER MP C2050/LD520C PCL 6

RECORD DRAWING CERTIFICATE

THESE DRAWINGS REFLECT RECORDED INFORMATION OBTAINED DURING CONSTRUCTION. INFORMATION PROVIDED HEREIN IS ACCURATE TO THE BEST OF MY KNOWLEDGE.

NAME DATE

SCALE: AS SHOWN

BAR IS ONE INCH ON ORIGINAL DRAWING 0 1"

IF NOT ONE INCH ON THIS SHEET, ADJUST SCALES ACCORDINGLY

CONSTRUCTION RECORD

FIELD BOOK

STAKING

FOREMAN

AS-BUILT

INSPECTOR

STATE OF ALASKA 49 TH PAUL C. WEBER CE-10276 REGISTERED PROFESSIONAL ENGINEER

2013 WATER DISTRIBUTION AND WATERING POINTS

SITE PLAN

CHEFORNAK, ALASKA

CE2 ENGINEERS, INC.

PO BOX 223948 ANCHORAGE, AK 99523 PH: 907-349-1010 FAX: 907-349-1015

REVISION	BY	DATE

Project No. ____ Date APRIL 2013 Designed ____ Drawn ____ Approved ____

Sheet No. C1.1

SHEET ____ OF ____

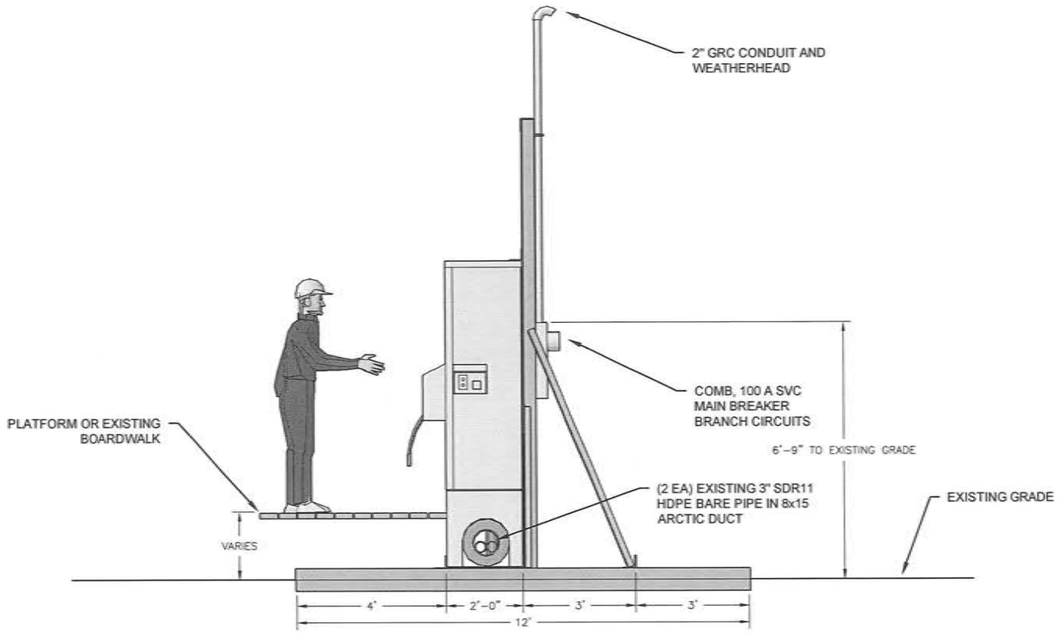

1 C1.2 SIDE ELEVATION
SCALE: 1/2"=1'-0"

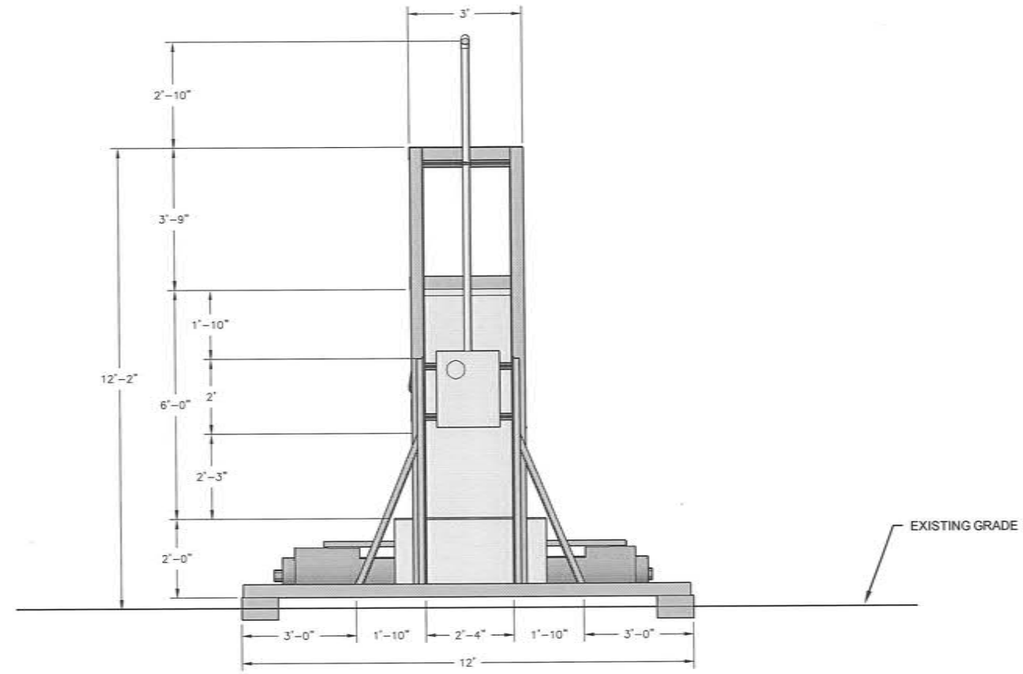

2 C1.2 BACK ELEVATION
SCALE: 1/2"=1'-0"

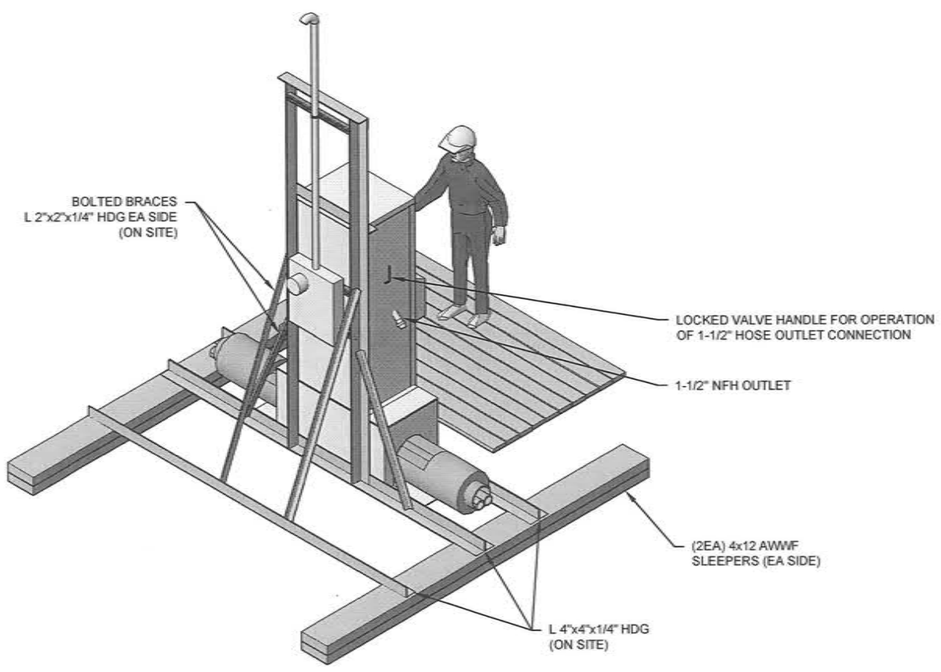

3 C1.2 BACK PERSPECTIVE VIEW
SCALE: 1/2"=1'-0"

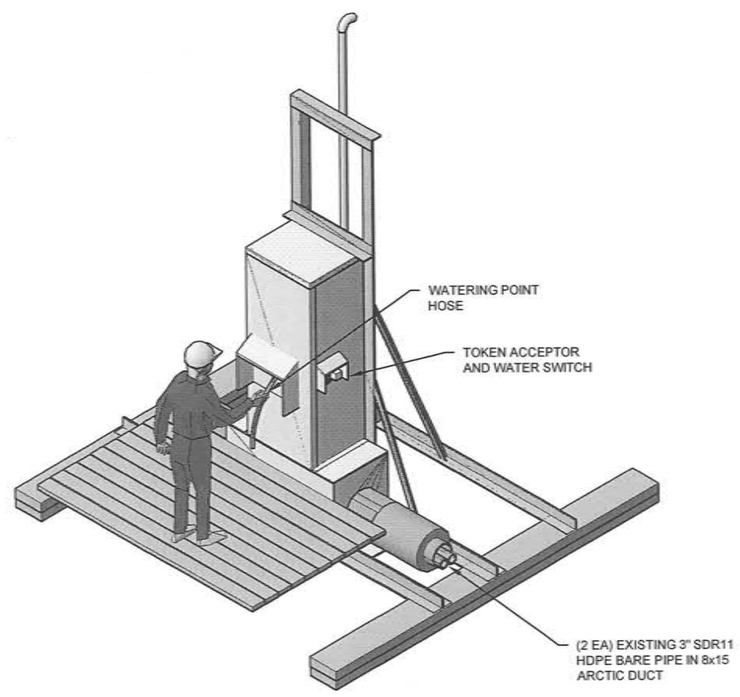

4 C1.2 FRONT PERSPECTIVE VIEW
SCALE: 1/2"=1'-0"

RECORD DRAWING CERTIFICATE
THESE DRAWINGS REFLECT RECORDED INFORMATION OBTAINED DURING CONSTRUCTION. INFORMATION PROVIDED HEREIN IS ACCURATE TO THE BEST OF MY KNOWLEDGE.
NAME DATE

SCALE: AS SHOWN
BAR IS ONE INCH ON ORIGINAL DRAWING
IF NOT ONE INCH ON THIS SHEET, ADJUST SCALES ACCORDINGLY

CONSTRUCTION RECORD
FIELD BOOK
STAKING
FOREMAN
AS-BUILT
INSPECTOR

STATE OF ALASKA 4938 PAUL C. WEBNER CE-10276 REGISTERED PROFESSIONAL ENGINEER

2013 WATER DISTRIBUTION AND WATERING POINTS
UPGRADED WATERING POINTS
CHEFORNAK, ALASKA

CE2 ENGINEERS, INC.
PO BOX 232948 ANCHORAGE, AK 99523 PH: 907-349-1010 FAX: 907-349-1015

REVISION	BY	DATE

Project No. ____ Date APRIL 2013
Designed ____
Drawn ____
Approved ____

Sheet No. C1.2
SHEET ____ OF ____

G:\ACAD\CHEFORNAK\2013 WATER DIST _UPGRADES\C1.2.dwg, 5/23/2013 2:21:42 PM, cmerz, \\Ce2main\LANIER MP C2050/LD520C PCL 6

NOTE:

- SEAL ALL FLANGED CONNECTIONS w/ LAYER OF GSSI MB-10A BUTYL RUBBER SEALANT TAPE 2"x1/8", #13297, TYP.

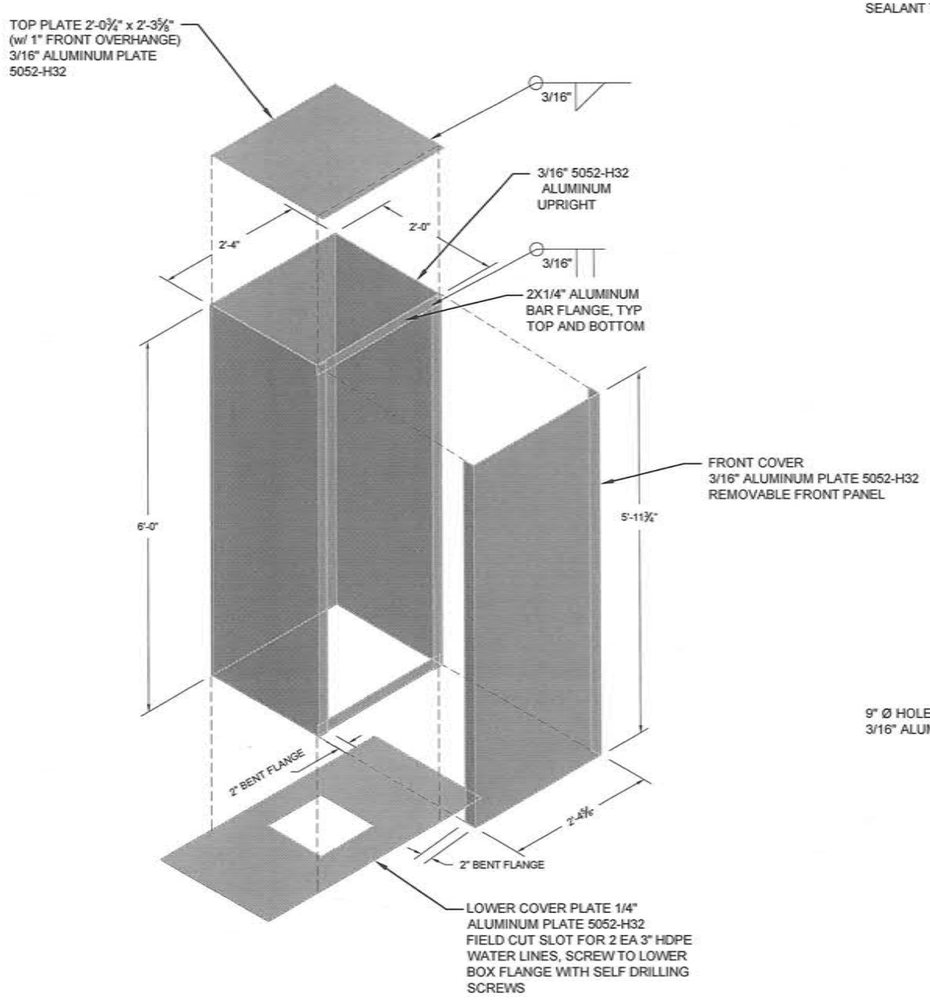

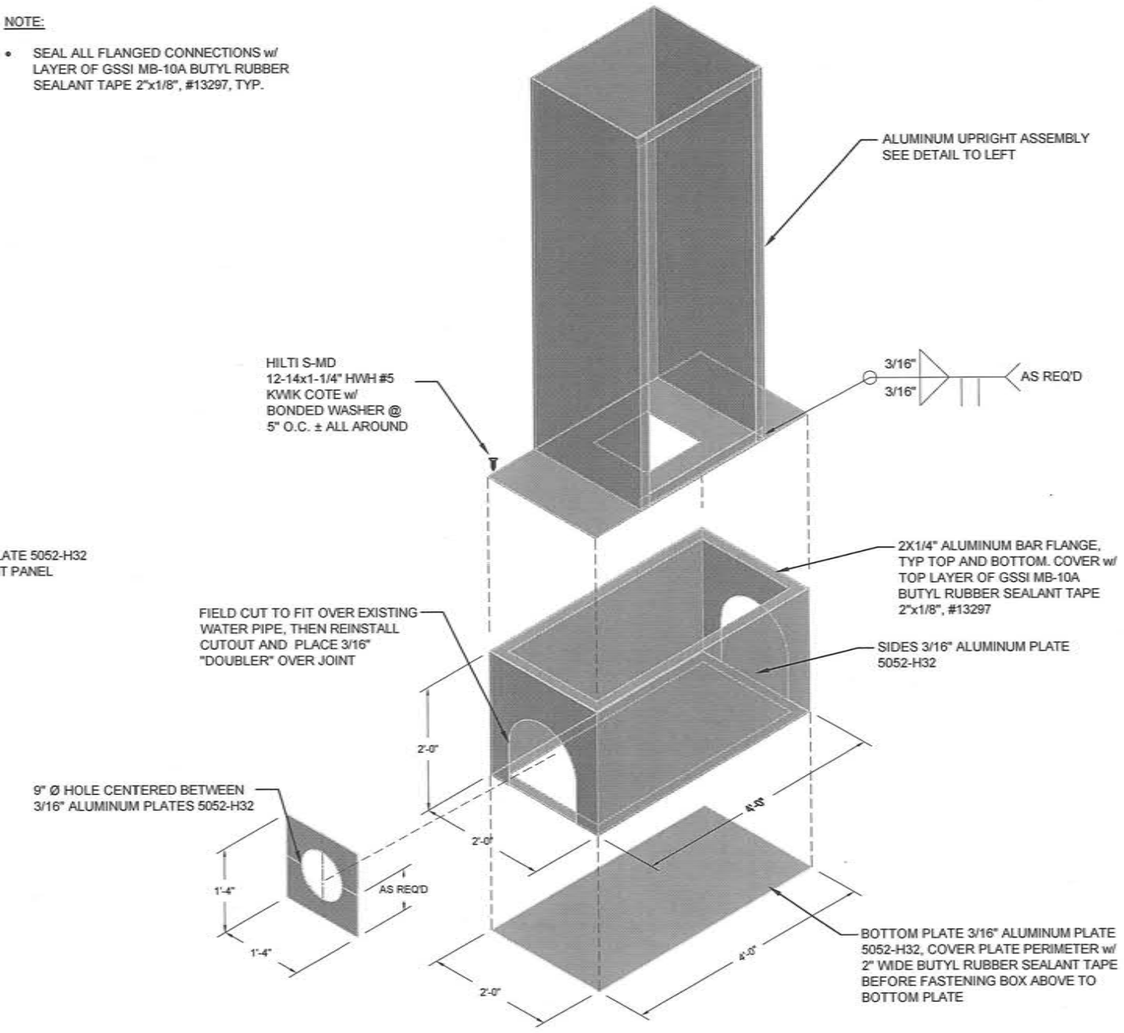

RECORD DRAWING CERTIFICATE

THESE DRAWINGS REFLECT RECORDED INFORMATION OBTAINED DURING CONSTRUCTION. INFORMATION PROVIDED HEREIN IS ACCURATE TO THE BEST OF MY KNOWLEDGE.

NAME DATE

SCALE: AS SHOWN

BAR IS ONE INCH ON ORIGINAL DRAWING 0 1"

IF NOT ONE INCH ON THIS SHEET, ADJUST SCALES ACCORDINGLY

CONSTRUCTION RECORD

FIELD BOOK

STAKING

FOREMAN

AS-BUILT

INSPECTOR

STATE OF ALASKA 49TH PAUL C. WEBER CE-10276 REGISTERED PROFESSIONAL ENGINEER

2013 WATER DISTRIBUTION AND WATERING POINTS

WATERING POINTS ENCLOSURE CONSTRUCTION

CHEFORNAK, ALASKA

CE2 ENGINEERS, INC.

PO BOX 223948 ANCHORAGE, AK 99523 PH: 907-349-1010 FAX: 907-349-1015

REVISION	BY	DATE

Project No. ____ Date APRIL 2013 Designed ____ Drawn ____ Approved ____

Sheet No. C1.3

SHEET ____ OF ____

G:\ACAD\CHEFORNAK\2013 WATER DIST _UPGRADES\C1.3 BOX HOOD.dwg, 4/22/2013 2:09:07 PM, cmerz, \\Ce2main\LANIER MP C2050/LD520C PCL 6

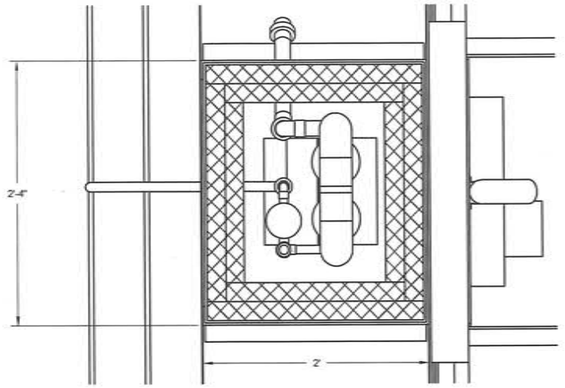

1 C1.3 TOP VIEW
SCALE: 1-1/2" = 1'-0"

NOTES:

1. HEAT IS SUPPLIED BY 2 EACH 30 FT LENGTHS OF 10w/FT HEAT TRACE INDIVIDUALLY THERMOSTATICALLY CONTROLLED FOR REDUNDANCY.
2. WATER DELIVERY HOSE FITS IN A LOW TEMPERATURE RATED OUTSIDE HOSE WITH A THERMOSTATICALLY CONTROLLED 5w/FT HEAT TRACE THAT IS ACTUATED BY OUTSIDE TEMPERATURES BELOW 34°.
3. A WEATHER PROOF GFCI RECEPTACLE OUTSIDE BELOW SERVICE METER BASE IS USED FOR MAINTENANCE.

OPERATIONAL NARRATIVE FOR WATERING POINT

THE WATERING POINTS ARE CONTINUATIONS OF THE 3-IN HDPE CIRCULATING WATER MAINS OF THE WATER DISTRIBUTION SYSTEM. SEE DETAIL 2 THIS SHEET BELOW.

1. THE 3-IN MAIN FORMS AN UPRIGHT LOOP IN THE WATERING POINT ENCLOSURE.
2. ON RIGHT SIDE OF THIS LOOP THERE IS A 1" ELECTROFUSION SADDLE OFF THE 3" PIPE THAT IS ISOLATED BY A SERVICE VALVE. DOWNSTREAM THERE IS A SOLENOID VALVE OPERATED BY A PUSH BUTTON OR TOKEN OPERATED TIMED SWITCH THAT ALLOWS WATER TO FLOW THROUGH A 1" VACUUM BREAKER, AND OUT THROUGH A 1" NSF 61 APPROVED HOSE TO THE CUSTOMER. THIS HOSE IS COVERED BY ANOTHER HOSE FOR PROTECTION. BETWEEN THE TWO HOSES IS A 5-WATT/FT HEAT TRACE TO PREVENT ICING UP OF THE WATER DELIVERY HOSE. THE HEAT TRACE IS CONTROLLED BY A REMOTE BULB THERMOSTAT THAT OPERATES WHEN THE OUTSIDE TEMPERATURE IS 34F.
3. ON THE LEFT SIDE OF THE 3" LOOP IS A 1-1/2" ELECTROFUSION SADDLE. THIS BRANCH IS CONTROLLED BY A SERVICE-TYPE BALL VALVE WITH A LOCKING OPERATING HANDLE PENETRATING THROUGH THE ENCLOSURE. DOWNSTREAM FROM THIS VALVE IS A 1-1/2" NSF 61 CERTIFIED HOSE, WITH A 1-1/2" FIRE HOSE MALE THREAD FITTING. THIS WHOLE SYSTEM SERVES AS A PURGE POINT FOR THE WATER MAIN, AND FOR ANY HIGH FLOWS NEEDED IN THE SYSTEM NEAR THE WATERING POINT.

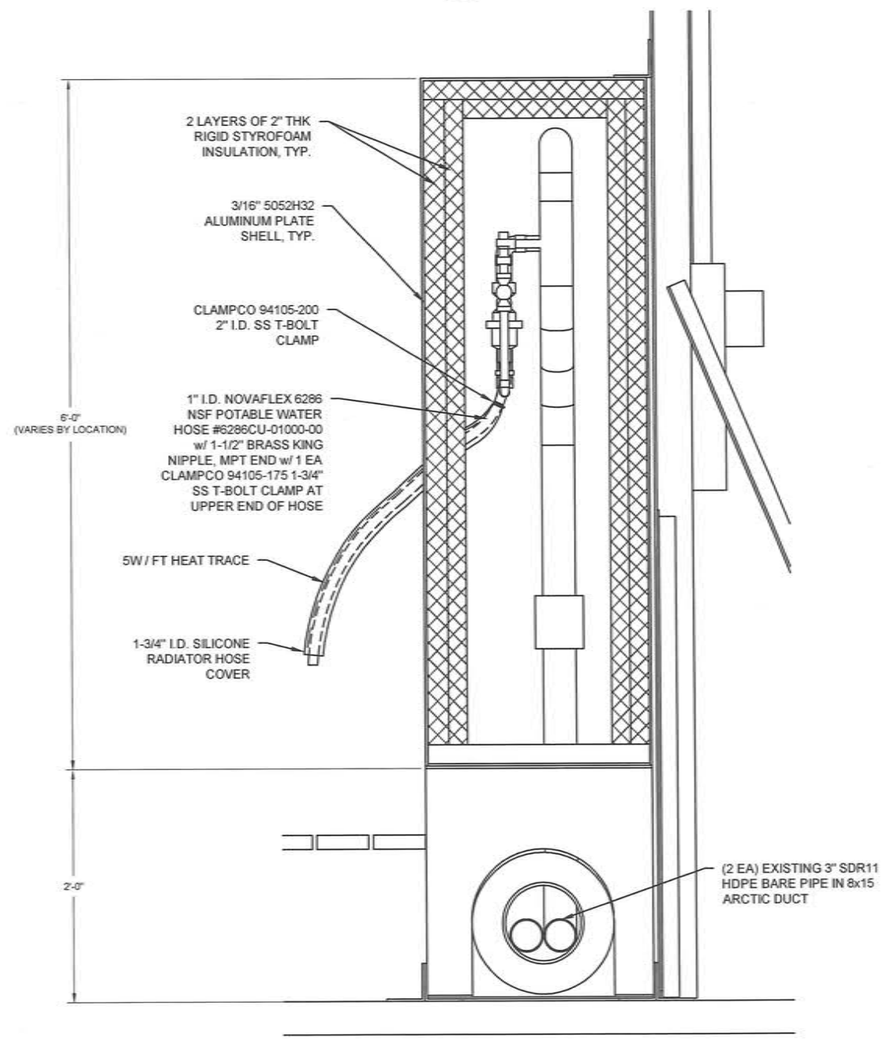

2 C1.3 SIDE ELEVATION
SCALE: 1-1/2" = 1'-0"

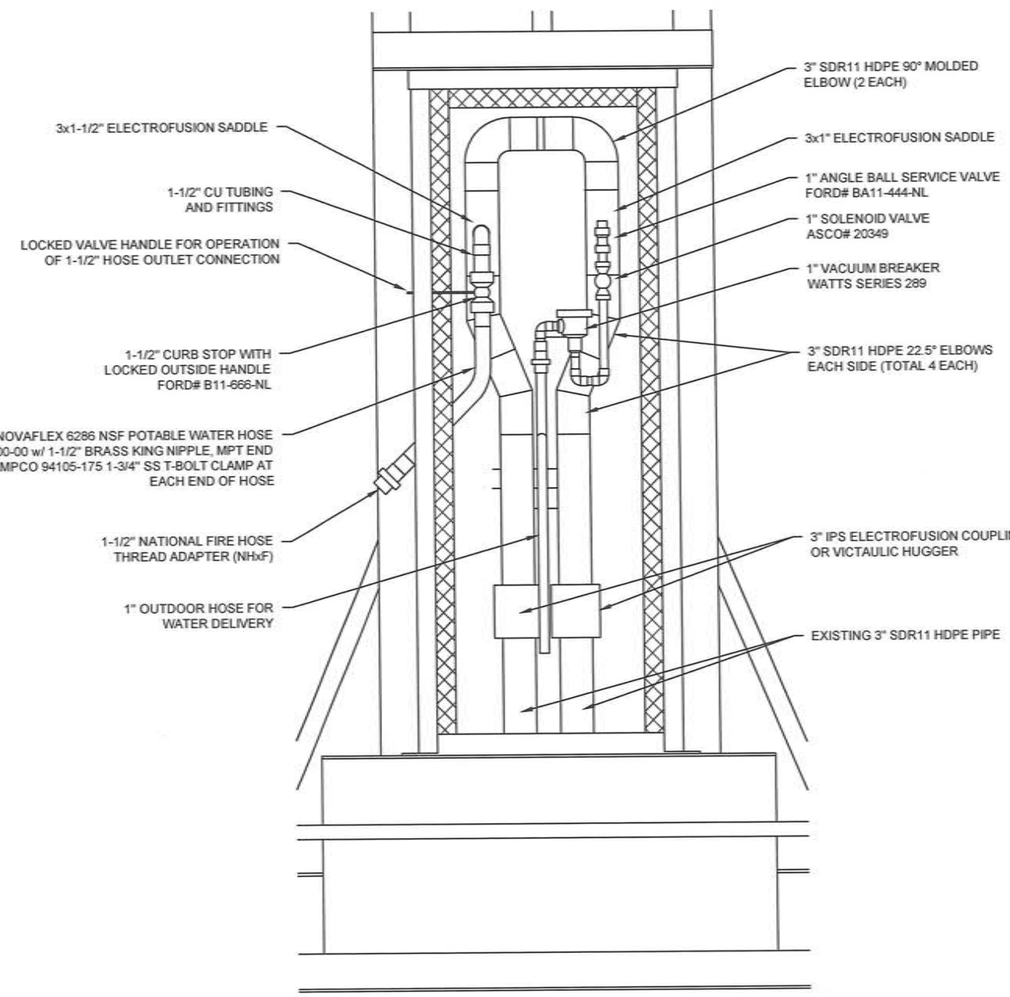

2 C1.3 FRONT ELEVATION
SCALE: 1-1/2" = 1'-0"

RECORD DRAWING CERTIFICATE
THESE DRAWINGS REFLECT RECORDED INFORMATION OBTAINED DURING CONSTRUCTION. INFORMATION PROVIDED HEREIN IS ACCURATE TO THE BEST OF MY KNOWLEDGE.
NAME DATE

SCALE: AS SHOWN
BAR IS ONE INCH ON ORIGINAL DRAWING 0 1"
IF NOT ONE INCH ON THIS SHEET, ADJUST SCALE ACCORDINGLY

CONSTRUCTION RECORD
FIELD BOOK
STAKING
FOREMAN
AS-BUILT
INSPECTOR

STATE OF ALASKA 49TH PAUL C. WEBNER CE-10276 REGISTERED PROFESSIONAL ENGINEER
5/23/13

2013 WATER DISTRIBUTION AND WATERING POINTS
UPGRADED WATERING POINTS
CHEFORNAK, ALASKA

CE2 ENGINEERS, INC.
PO BOX 220948 ANCHORAGE, AK 99522 PH: 907-349-1010 FAX: 907-349-1015

REVISION	BY	DATE

Project No. ___ Date APRIL 2013
Designed ___
Drawn ___
Approved ___

Sheet No. C1.4
SHEET ___ OF ___

G:\ACAD\CHEFORNAK\2013 WATER DIST _UPGRADES\C1.4.WATERING POINT ELEVdwg.dwg, 5/23/2013 6:09:58 PM, cmerz, \\Ce2main\LANIER MP C2050/LD520C PCL 6

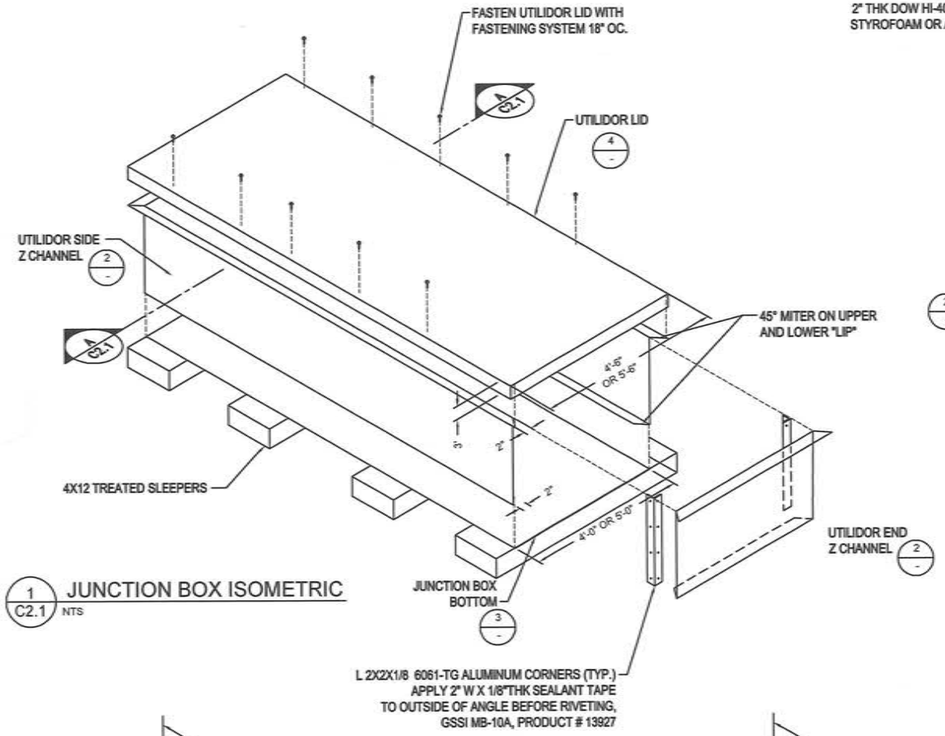

1 C2.1 JUNCTION BOX ISOMETRIC
NTS

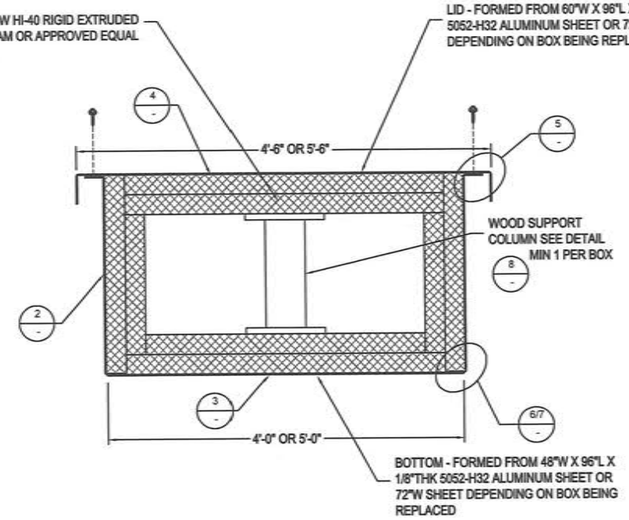

A C2.1 UTILIDOR SECTION
NTS

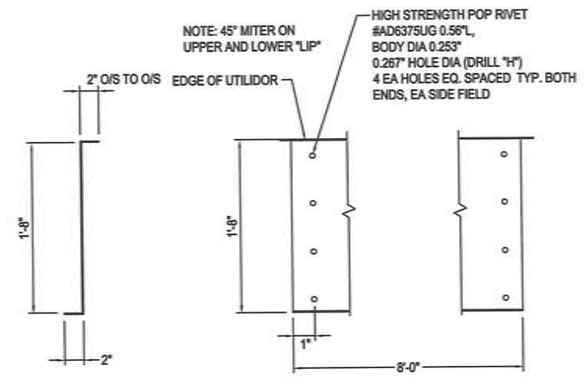

2 C2.1 SIDE & END Z-CHANNEL DETAILS
NTS

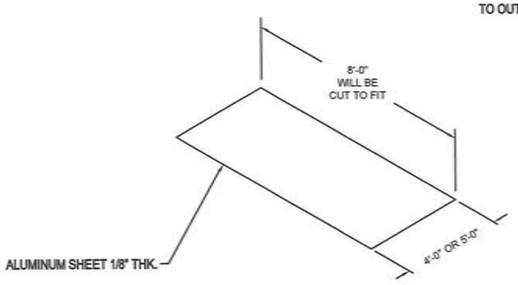

3 C2.1 BOTTOM SHEET DETAIL
NTS

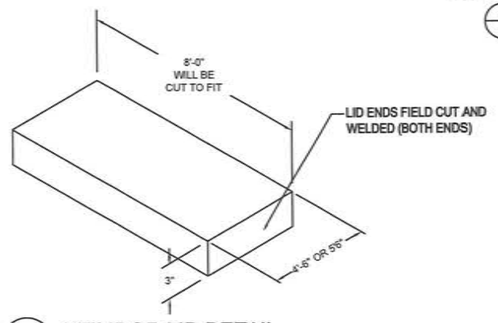

4 C2.1 UTILIDOR LID DETAIL
NTS

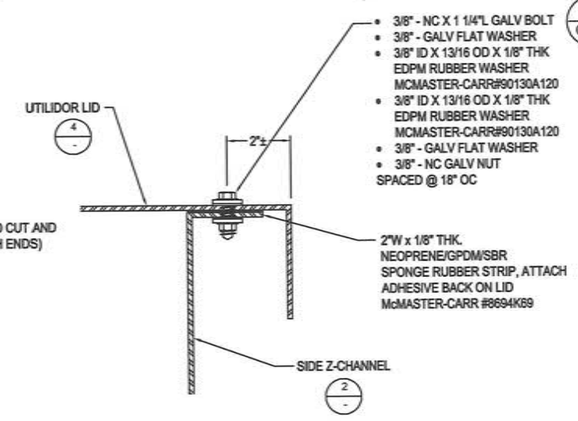

5 C2.1 TOP BOLTED DETAIL
NTS

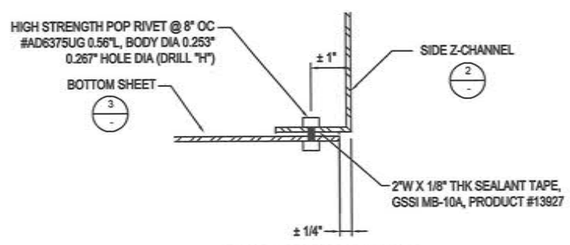

6 C2.1 BASE SEAM DETAIL (EXCEPT AT SLEEPERS)
NTS

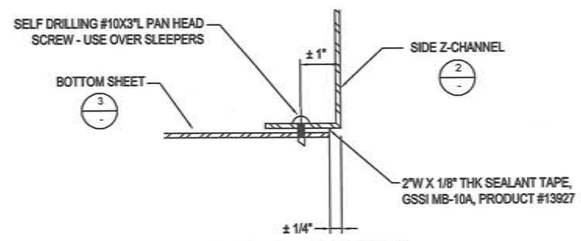

7 C2.1 BASE SEAM DETAIL (AT SLEEPERS)
NTS

NOTE:

1. ALL ALUMINUM SHALL BE 5052-H32 1/8" THICK, UNLESS OTHERWISE NOTED.
2. BOTTOM OF UTILIDOR WILL BE SEALED W/ 2"W X 1/8" THK SEALANT TAPE, GSSI MB-10A, PRODUCT #13927

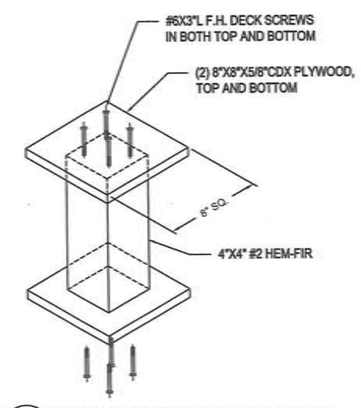

8 C2.1 WOOD SUPPORT COLUMN
NTS

RECORD DRAWING CERTIFICATE
THESE DRAWINGS REFLECT RECORDED INFORMATION OBTAINED DURING CONSTRUCTION. INFORMATION PROVIDED HEREIN IS ACCURATE TO THE BEST OF MY KNOWLEDGE.
NAME DATE

SCALE: AS SHOWN
BAR IS ONE INCH ON ORIGINAL DRAWING 0 1"
IF NOT ONE INCH ON THIS SHEET, ADJUST SCALES ACCORDINGLY

CONSTRUCTION RECORD
FIELD BOOK
STAKING
FOREMAN
AS-BUILT
INSPECTOR

STATE OF ALASKA 4938 PAUL C. WOODS REGISTERED PROFESSIONAL ENGINEER CE-10276

2013 WATER DISTRIBUTION AND WATERING POINTS
UTILIDOR DETAILS
CHEFORNAK, ALASKA

CE2 ENGINEERS, INC.
PO BOX 230948 ANCHORAGE, AK 99523 PH: 907-349-1010 FAX: 907-349-1015

REVISION	BY	DATE

Project No. ____ Date APRIL 2013
Designed PCW
Drawn LAW
Approved PCW

Sheet No. C2.1
SHEET ____ OF ____

G:\ACAD\CHEFORNAK\2013 WATER DIST _UPGRADES\C2.1 UTILIDOR DETAILS.dwg, 5/23/2013 2:40:51 PM, cmerz, \\Ce2main\LANIER MP C2050/LD520C PCL 6

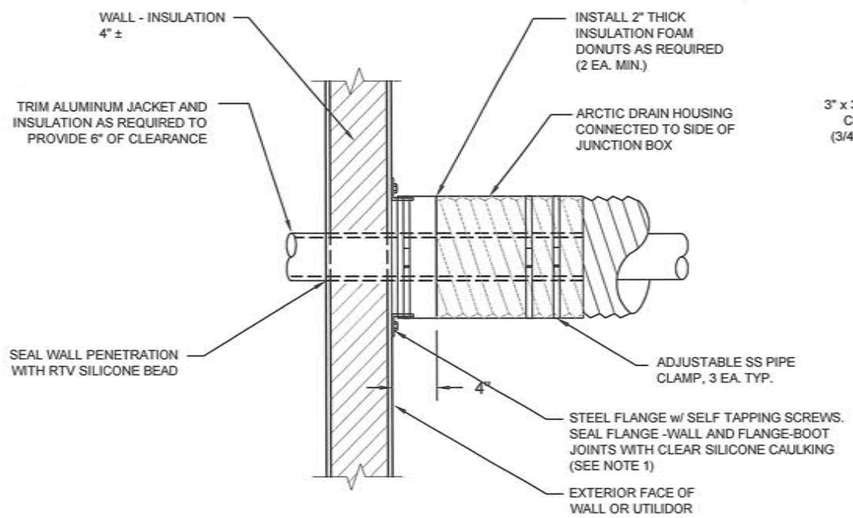

1 / C2.2 ARCTIC PIPE SIDE WALL PENETRATION DETAILS
NTS

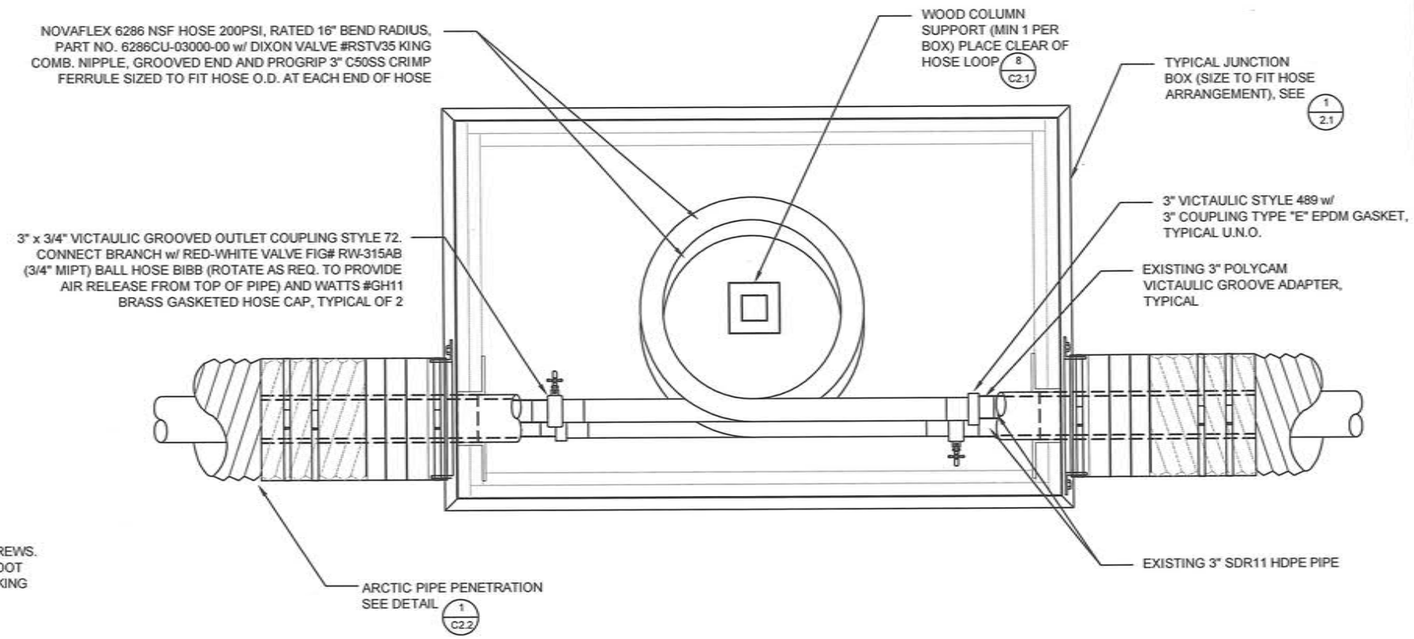

2 / C2.2 JUNCTION BOX HOSE DETAIL
NTS

NOMINAL OUTER JACKET SIZE	FLANGE O.D.	FLANGE I.D.
12"	15"	12 ⅞"
15"	18"	15 ⅞"
18"	20"	18 ⅞"

NOTES:

1. STEEL FLANGES AT JUNCTION BOX PENETRATIONS MAY NEED TO BE FIELD TRIMMED.

RECORD DRAWING CERTIFICATE
THESE DRAWINGS REFLECT RECORDED INFORMATION OBTAINED DURING CONSTRUCTION. INFORMATION PROVIDED HEREIN IS ACCURATE TO THE BEST OF MY KNOWLEDGE.
NAME DATE

SCALE: AS SHOWN
BAR IS ONE INCH ON ORIGINAL DRAWING 0 1"
IF NOT ONE INCH ON THIS SHEET, ADJUST SCALES ACCORDINGLY

CONSTRUCTION RECORD
FIELD BOOK
STAKING
FOREMAN
AS-BUILT
INSPECTOR

STATE OF ALASKA 49TH PAUL LAWSON CE-10276 REGISTERED PROFESSIONAL ENGINEER

2013 WATER DISTRIBUTION AND WATERING POINTS
ARTIC PIPE PENETRATION & JUNCTION BOX DETAILS
CHEFORNAK, ALASKA

CE2 ENGINEERS, INC.
PO BOX 223594 ANCHORAGE, AK 99523 PH: 907-349-1010 FAX: 907-349-1015

REVISION	BY	DATE

Project No. ____
Date APRIL 2013
Designed PCW
Drawn LAW
Approved PCW

Sheet No. C2.2
SHEET ____ OF ____

G:\ACAD\CHEFORNAK\2013 WATER DIST _UPGRADES\C2.2.dwg, 5/23/2013 6:13:11 PM, cmerz, \\Ce2main\LANIER MP C2050/LD520C PCL 6

LOAD CENTER SCHEDULE

VOLTAGE: 240/120V, 1PH, 3W
BUS: 100
MAIN: LUGS ONLY – FED BY 100A OPD

LOCATION: "WATERING POINT"

MIN. A.I.C. RATING: SEE 1LINE
ENCLOSURE: NEMA 3R
MOUNTING: SURFACE

LOAD DESCRIPTION	NOTE	KVA	LOAD	AMP	P	CKT	A	B	CKT	AMP	P	LOAD DESCRIPTION	NOTE	KVA	LOAD
HEAT TRACE– WATER SUPPLY PIPE	1	0.60	C	20	1	– 1			2 –		1	– SPACE –			
HEAT TRACE– WATER DELIVERY HOSE	1	0.10	C	15	1	– 3			4 –		1	– SPACE –			
TOKEN DROP,SOLENOID VALVE		0.50	N	20	1	– 5			6 –		1	– SPACE –			
MAINTENANCE RECEPTACLE		0.18	R	20	1	– 7			8 –		1	– SPACE –			
– SPACE –					1	– 9			10 –		1	– SPACE –			
– SPACE –					1	– 11			12 –		1	– SPACE –			

SUMMARY BY LOAD TYPE		CONNECTED KVA PH A	PH B	FEED	TOTAL KVA	NEC %	NEC TOTAL
G	GENERAL LOADS					N/A	
A	APPLIANCE					0.75	
E	ELECTRIC RANGE					1.00	
L	LIGHTING					1.25	
R	RECEPTACLES		0.2		0.2	10K+50%	0.2
M	MOTORS					1.00	
LM	LARGEST MOTOR					1.25	
C	CONTINUOUS	0.6	0.1		0.7	1.25	0.9
N	NON–CONTINUOUS	0.5			0.5	1.00	0.5
S	SPARE					1.00	
X	NON–COINCIDENT					0.00	
K	KITCHEN					1.00	
D	DRYER					1.00	
O	OTHER					1.00	
ETR	EXIST'G TO REMAIN					1.25	
F	FEEDER						
TOTAL KVA (PHASE)		1.1	0.3		1.4		1.6
TOTAL AMPERES		9.2	2.3		5.8		6.5
PHASE BALANCE, ABC		A–B					
PERCENT		118.8%					

NOTES:
1. PROVIDE 30mA GFPE CIRCUIT BREAKER.

ELECTRICAL LEGEND

(NOTE: THIS IS A STANDARD LEGEND AND NOT ALL SYMBOLS ARE NECESSARILY USED.)

- SERVICE METER/MAIN
- MOTOR CONNECTION
- NON–FUSED SAFETY SWITCH
- FUSED SAFETY SWITCH
- ENCLOSED CIRCUIT BREAKER SWITCH
- MOTOR STARTER
- COMBINATION MOTOR STARTER SAFETY SWITCH
- J JUNCTION BOX OR EQUIPMENT CONNECTION – FLEX OR RECEPTACLE AS REQUIRED
- DUPLEX RECEPTACLE
- DOUBLE DUPLEX RECEPTACLE
- GFCI DUPLEX RECEPTACLE – GFCI PROTECTED
- WP SPECIAL PURPOSE RECEPTACLE – NEMA CONFIGURATION AS NOTED
- X DENOTES AVAILABLE FAULT CURRENT

ABBREVIATIONS

A	AMPERES
AFG	ABOVE FINISHED GRADE
AHJ	AUTHORITY HAVING JURISDICTION
AIC	AMPS INTERRUPTING CAPACITY
C	CONDUIT
CO	CONDUIT ONLY
EGC	EQUIPMENT GROUNDING CONDUCTOR
FHP	FRACTIONAL HORSEPOWER
G	GROUND FAULT CIRCUIT INTERRUPTER
GEC	GROUNDING ELECTRODE CONDUCTOR
HP	HORSEPOWER
KVA	KILOVOLT–AMPERE
KW	KILOWATT
PH, ø	PHASE
RIB	RELAY IN A BOX (MOTOR RATED)
SCCR	SHORT CIRCUIT CURRENT RATING
SE	SERVICE ENTRANCE RATED
V	VOLTS
VA	VOLT–AMPERES
W	WATTS
WP	WEATHERPROOF (NEMA 4 RATED)

GENERAL REQUIREMENTS

1. ALL ELECTRICAL WORK SHALL BE INSTALLED IN ACCORDANCE WITH ALL REQUIREMENTS OF THE LATEST EDITION OF THE NATIONAL ELECTRIC CODE, STATE, MUNICIPAL, AND FEDERAL LAWS, AMENDMENTS AND/OR ORDINANCES GOVERNING THE PROJECT. IF IN ANY INSTANCE THE PLANS AND SPECIFICATIONS ARE IN DIRECT CONFLICT WITH SUCH CODES, LAWS, AND/OR ORDINANCES, THE CODE, LAWS, AND/OR ORDINANCES SHALL HAVE JURISDICTION AND THE WORK IN QUESTION SHALL BE INSTALLED ACCORDING TO THE CODES, LAWS, AND/OR ORDINANCES. ALL WORK SHALL BE PERFORMED UNDER THE SUPERVISION OF A CERTIFIED ELECTRICIAN.
2. THE CONTRACTOR SHALL OBTAIN ALL REQUIRED CONSTRUCTION PERMITS AND PAY ALL ASSOCIATED FEES.
3. MATERIALS AND EQUIPMENT SHALL BE COMMERCIAL GRADE AND ACCEPTABLE TO THE AUTHORITY HAVING JURISDICTION AS SUITABLE FOR THE USE INTENDED. ALL ELECTRICAL EQUIPMENT SHALL INCLUDE THE SEAL OF A NATIONALLY RECOGNIZED TESTING LABORATORY FOR THE PURPOSE FOR WHICH IT IS INSTALLED. WHENEVER POSSIBLE, SIMILAR ITEMS SHALL BE SUPPLIED BY THE SAME MANUFACTURER THROUGHOUT THE PROJECT.
4. COORDINATE AND PROVIDE THE EQUIPMENT WITH THE SHORT CIRCUIT CURRENT RATING (SCCR) FOR THE AVAILABLE FAULT CURRENT AT THE POINT OF THE SYSTEM WHERE INSTALLED. SERIES RATING OF EQUIPMENT IS ACCEPTABLE. PROVIDE ARC FAULT WARNING LABELS ON ALL PANELBOARDS, MCC UNITS AND SIMILAR EQUIPMENT PER NEC REQUIREMENTS.
5. THE FOLLOWING WIRING METHODS SHALL BE ACCEPTABLE FOR INSTALLATION OF ELECTRICAL CIRCUITS: RIGID METAL CONDUIT, AND LIQUID TIGHT FLEXIBLE CONDUIT. ALL WIRING METHODS SHALL INCLUDE AN EQUIPMENT GROUNDING CONDUCTOR TO BE INSTALLED THEREIN AND SIZED FOR THE CIRCUITS SERVED.
6. ALL CONDUCTORS SHALL BE COPPER. ALL CONDUCTORS LOCATED OUTSIDE ARE REQUIRED TO HAVE TYPE XHHW 90 DEGREE C INSULATION. CONDUCTOR AMPACITY SHALL BE BASED ON TABLE 310–16 OF THE NEC. USE 60–DEGREE C. RATING FOR CIRCUITS TERMINATING ON DEVICES RATED BELOW 100A. USE 75–DEGREE C RATING FOR CIRCUITS TERMINATING ON DEVICES AND IN ENCLOSURES RATED 100A AND OVER. DERATE CONDUCTORS PER NEC REQUIREMENTS.

   MINIMUM SIZE CONDUCTORS FOR 15 AND 20 AMP BRANCH CIRCUITS MEASURED FROM THE PANELBOARD TO THE FURTHEST DEVICE ON THE CIRCUIT UNLESS OTHERWISE NOTED ON THE DRAWINGS:
   a. 10 AWG CONDUCTORS FOR 120 VOLT BRANCH CIRCUITS 75 FEET TO 120 FEET.
   b. 8 AWG CONDUCTORS FOR 120 VOLT BRANCH CIRCUITS GREATER THAN 120 FEET.

   MINIMUM SIZE CONTROL CIRCUIT CONDUCTORS SHALL BE 14 AWG, UNLESS OTHERWISE NOTED.
7. PROVIDE ALL WIRING AND EQUIPMENT IN WET AND EXTERIOR LOCATIONS USING EQUIPMENT AND WIRING METHODS RATED FOR WET ENVIRONMENTS.
8. CONTRACTOR SHALL SUBMIT REQUEST FOR SUBSTITUTION IN WRITING TO THE ENGINEER.
9. THE ELECTRICAL CONTRACTOR SHALL CONTACT THE SERVING UTILITY CO. AND VERIFY EXACT SERVICE REQUIREMENTS FOR POWER. THE CONTRACTOR SHALL COORDINATE AND PROVIDE ALL REQUIREMENTS OF THE SERVING UTILITY AND ALL EQUIPMENT SHALL CONFORM TO THE SERVING UTILITY STANDARDS AND REQUIREMENTS.

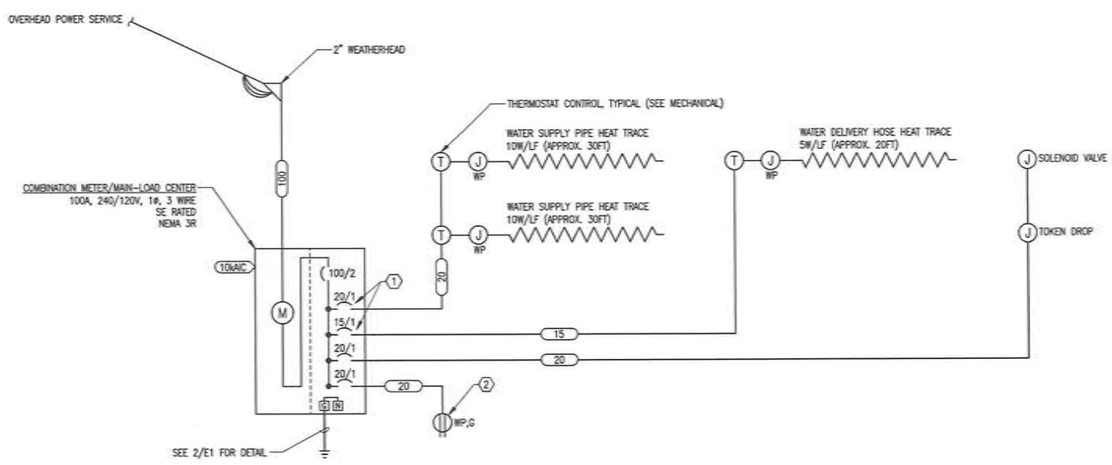

DETAIL NOTES

1. PROVIDE 30mA GFPE CIRCUIT BREAKER FOR HEAT TRACE.
2. MOUNT GFCI DUPLEX MAINENTANCE RECEPTACLE ADJACENT TO SERVICE METER/MAIN–LOAD CENTER.
3. CONTRACTOR TO COORDINATE POWER SERVICE CONNECTION AND REQUIREMENTS WITH UTILITY.

FEEDER SCHEDULE

15	(2)12 AWG, (1)12 AWG EGC, 1/2" C.
20	(2)12 AWG, (1)12 AWG EGC, 1/2" C.
100	(3)2 AWG, (1)8 AWG EGC, 2" C.

1 POWER ONE-LINE DIAGRAM
E1 SCALE: NONE

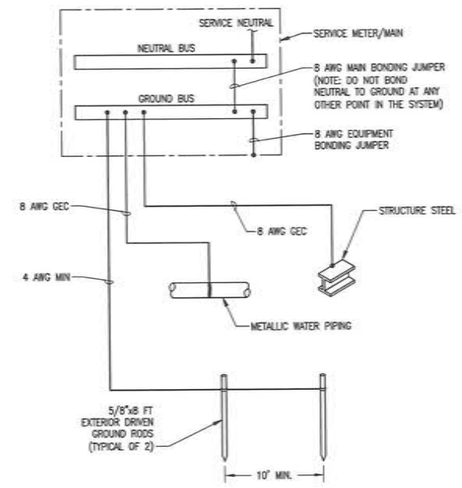

DETAIL NOTES

1. BOND ALL PIPING AND BUILDING DISCONTINUITIES TO PROVIDE ELECTRICALLY CONTINUOUS SYSTEM. PROVIDE BOND JUMPER EQUAL TO GROUNDING ELECTRODE CONDUCTOR FOR THAT SYSTEM.
2. PROVIDE RACEWAY FOR ALL CONDUCTORS. RACEWAY TO BE METALLIC IN PLENUM AIR SPACES. WHERE METALLIC RACEWAY IS USED BOND EACH END TO CONDUCTOR.
3. ALL CONDUCTOR SIZES SHOWN ARE COPPER.

2 GROUNDING SYSTEM DIAGRAM
E1 SCALE: NONE

EIC ENGINEERS, INC
ELECTRICAL ENGINEERS
6927 OLD SEWARD HWY, SUITE 200
ANCHORAGE, AK 99518
T 907.349.9712
F 907.349.9713
www.eiceng.com
EIC JOB #E12-1795

RECORD DRAWING CERTIFICATE
THESE DRAWINGS REFLECT RECORDED INFORMATION OBTAINED DURING CONSTRUCTION. INFORMATION PROVIDED HEREIN IS ACCURATE TO THE BEST OF MY KNOWLEDGE.
NAME DATE

SCALE: AS SHOWN
BAR IS ONE INCH ON ORIGINAL DRAWING
0 1"
IF NOT ONE INCH ON THIS SHEET ADJUST SCALES ACCORDINGLY

CONSTRUCTION RECORD
FIELD BOOK
STANDING
FOREMAN
AS-BUILT
INSPECTOR

STATE OF ALASKA 49TH BRIAN L. SOMMO No. EE-11784 REGISTERED PROFESSIONAL ENGINEER

2012 WATERING POINT UPGRADES
ELECTRICAL
CHEFORNAK, ALASKA

CE2 ENGINEERS, INC.
PO BOX 232446 ANCHORAGE, AK 99523 PH: 907-349-1010 FAX: 907-349-1015

REVISION	BY	DATE

Project No.
Date MAY 2013
Designed BLS
Drawn BLS
Approved EDC

Sheet No.
E1

MEMORANDUM

State of Alaska
Department of Environmental Conservation

TO: Greg Magee

DATE: October 5, 2012

FILE NO: Chefornak Design Review Binder

PHONE NO: 269-7614

FROM: Susan Randlett
VSW Project Manager

SUBJECT: Strategy for Watering Point Prototype

Today's memo to you is to describe the variation in design review process you authorized at the Chefornak issues meeting yesterday.

This memo and the plan sheets will be posted on the project web site. The meeting, attended by you, Paul Weisner, P.E., and I, led to the following agreements:

1) CE2 has an immediate green light NTP to fabricate the prototype, subject to the normal procurement rules.

2) The VSW Manager will make a progress inspection of the prototype at the CE2 shop.

3) The watering points are service connection upgrades. No 18AAC80 plan submittal will occur. Materials appropriate for potable water will be specified.

4) We mutually acknowledge a tradeoff: the fewer non-critical components in the watering points, the fewer opportunities for component failure. VSW offers no opinion on whether the CE2 should incorporate devices to track performance.

5) The City Council formally selected the Double D token shape.

6) CE2 is aware that the condition of the Naterkaq's utility's lines is unknown.

7) Approval via prototype is unique. No physical installation may occur without a green light from the VSW project manager, in coordination with the VSW program manager.

Attachment: Sheets C1.2 and C1.3, CE2 Engineers, Sept. 2012
Token selection: Double D

cc: Doug Poage, P.E., Lead Engineer
Dan Reichardt, P.E., Division of Environmental Health
Paul Weisner, P.E., Design Engineer

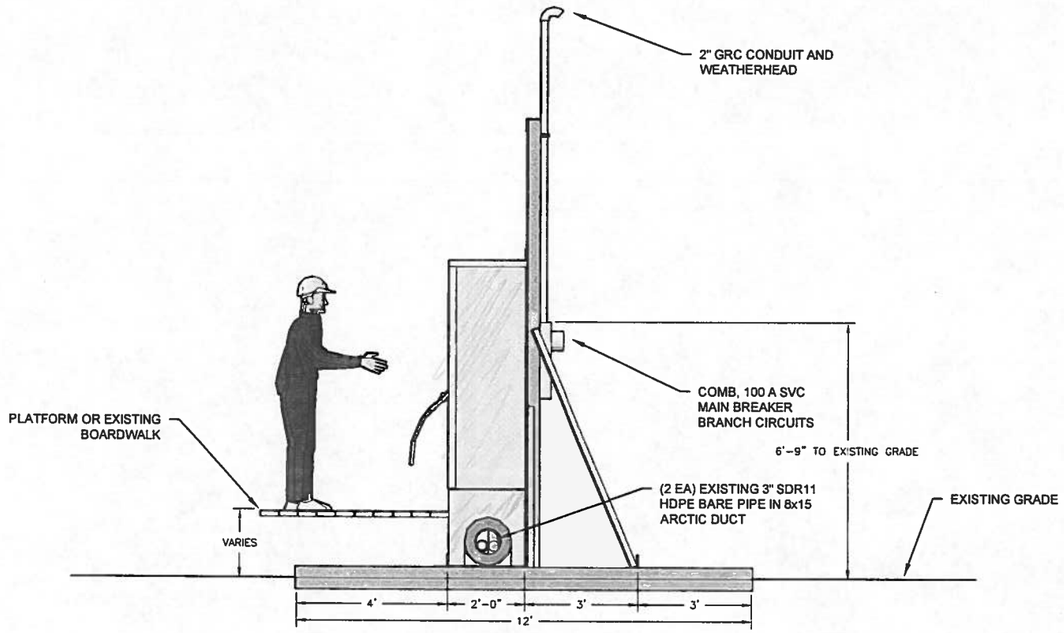

1 C1.2 SIDE ELEVATION
SCALE: 1/2"=1'-0"

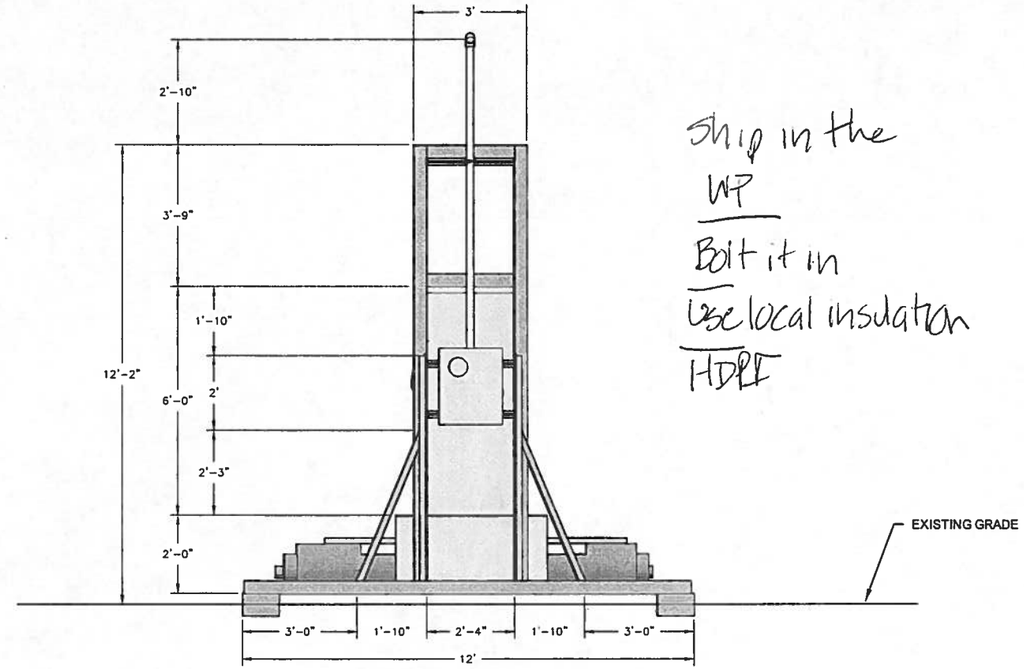

Ship in the WP
Bolt it in
Use local insulation
HDPE

2 C1.2 BACK ELEVATION
SCALE: 1/2"=1'-0"

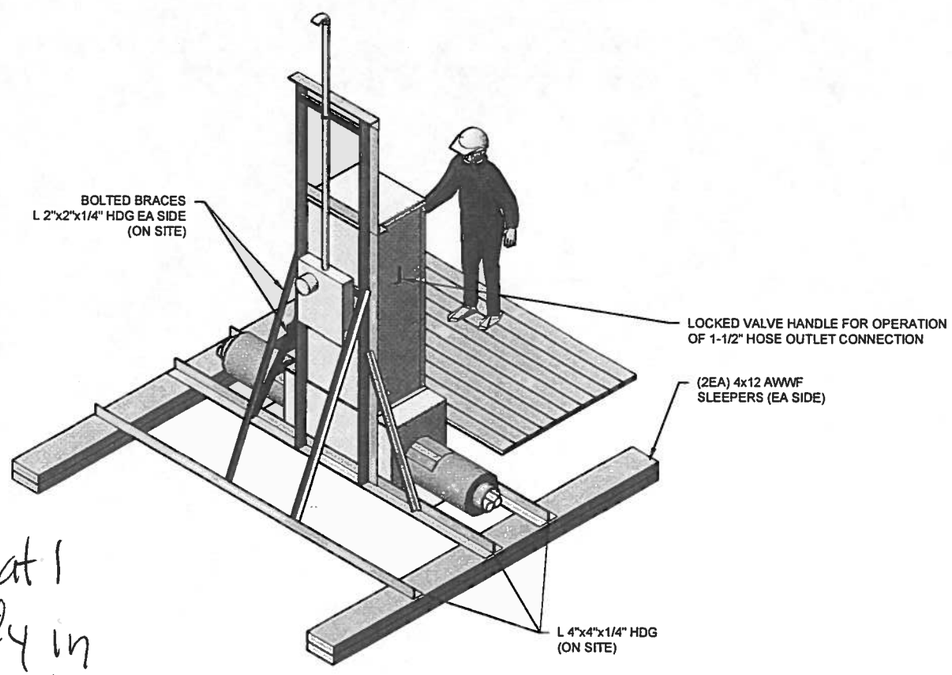

Most mat'l already in Chefornak (surplus)

3 C1.2 BACK PERSPECTIVE VIEW
SCALE: 1/2"=1'-0"

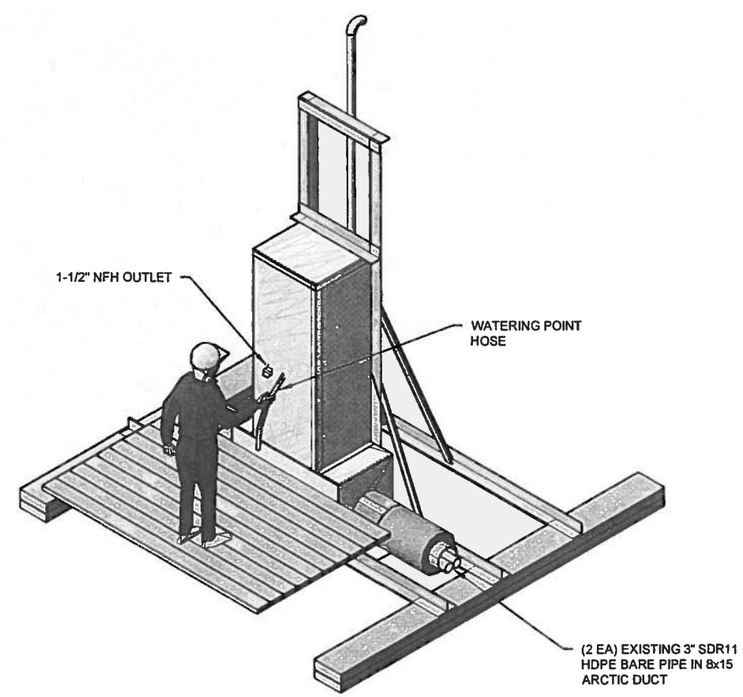

4 C1.2 FRONT PERSPECTIVE VIEW
SCALE: 1/2"=1'-0"

RECORD DRAWING CERTIFICATE
THESE DRAWINGS REFLECT RECORDED INFORMATION OBTAINED DURING CONSTRUCTION. INFORMATION PROVIDED HEREIN IS ACCURATE TO THE BEST OF MY KNOWLEDGE.
NAME DATE

SCALE: AS SHOWN
BAR IS ONE INCH ON ORIGINAL DRAWING 0 1"
IF NOT ONE INCH ON THIS SHEET, ADJUST SCALES ACCORDINGLY

CONSTRUCTION RECORD
FIELD BOOK
STAKING
FOREMAN
AS-BUILT
INSPECTOR

STATE OF ALASKA 49TH PAUL C. WEBNER CE-10276 REGISTERED PROFESSIONAL ENGINEER

2012 WATERING POINT UPGRADES
UPGRADED WATERING POINTS
CHEFORNAK, ALASKA

CE2 ENGINEERS, INC.
PO BOX 220248 ANCHORAGE, AK 99522 PH: 907-349-1010 FAX: 907-349-1015

REVISION	BY	DATE

Project No. ____ Date SEPT 2012 Designed PCW Drawn ____ Approved PCW

Sheet No. C1.2
SHEET ____ OF ____

G:\ACAD\CHEFORNAK\2012 Watering Points Upgrade\C1.2.dwg, 10/4/2012 12:53:30 PM, cmerz, \\Ce2main\LANIER MP C2050/LD520C PCL 6

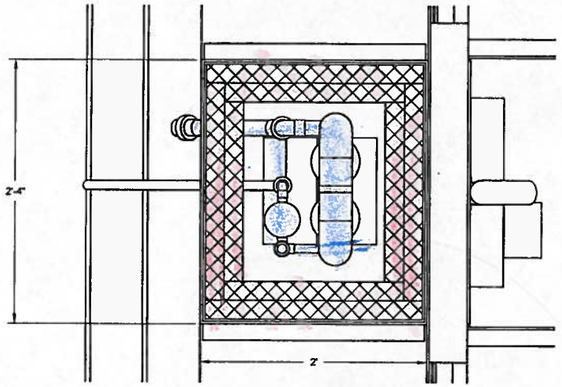

1 C1.3 TOP VIEW
SCALE: 1-1/2" = 1'-0"

NOTES:

1. HEAT IS SUPPLIED BY 2 EACH 30 FT LENGTHS OF 10w/FT HEAT TRACE INDIVIDUALLY THERMOSTATICALLY CONTROLLED FOR REDUNDANCY.
2. WATER DELIVERY HOSE FITS IN A LOW TEMPERATURE RATED OUTSIDE HOSE WITH A THERMOSTATICALLY CONTROLLED 5w/FT HEAT TRACE THAT IS ACTUATED BY OUTSIDE TEMPERATURES BELOW 34°.
3. A WEATHER PROOF GFCI RECEPTACLE OUTSIDE BELOW SERVICE METER BASE FOR MAINTENANCE.

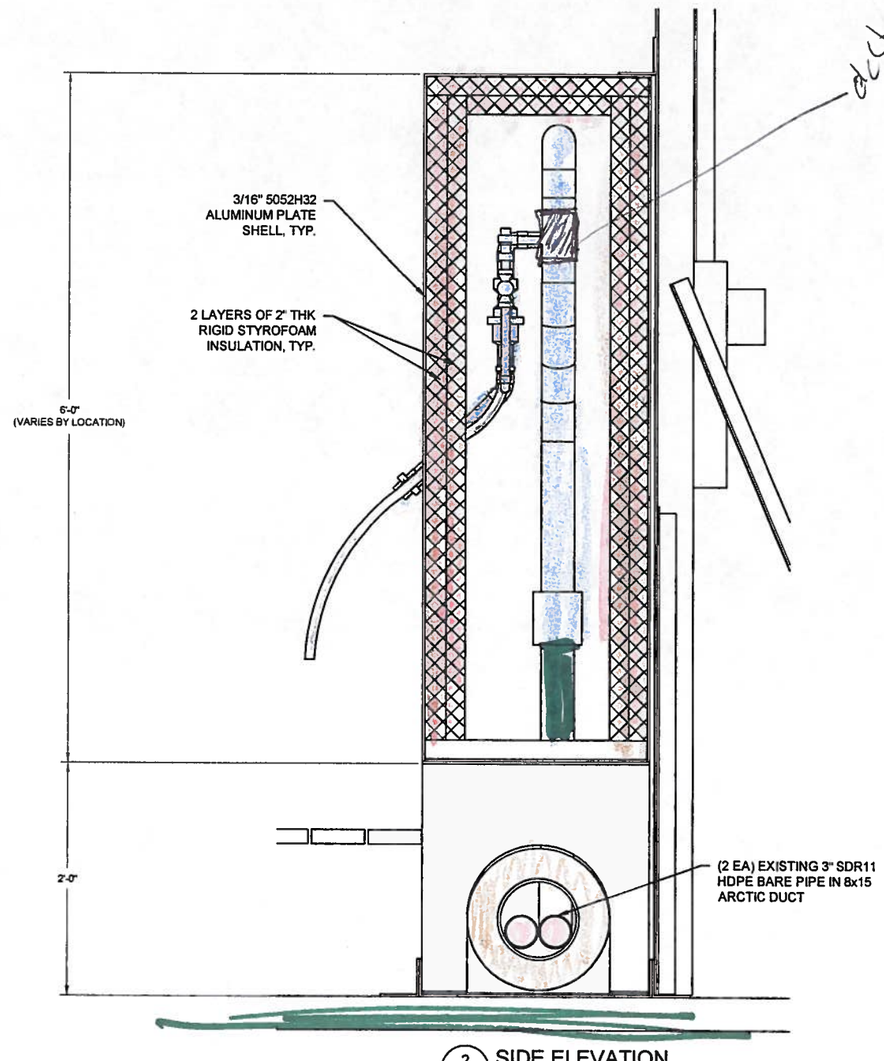

2 C1.3 SIDE ELEVATION
SCALE: 1-1/2" = 1'-0"

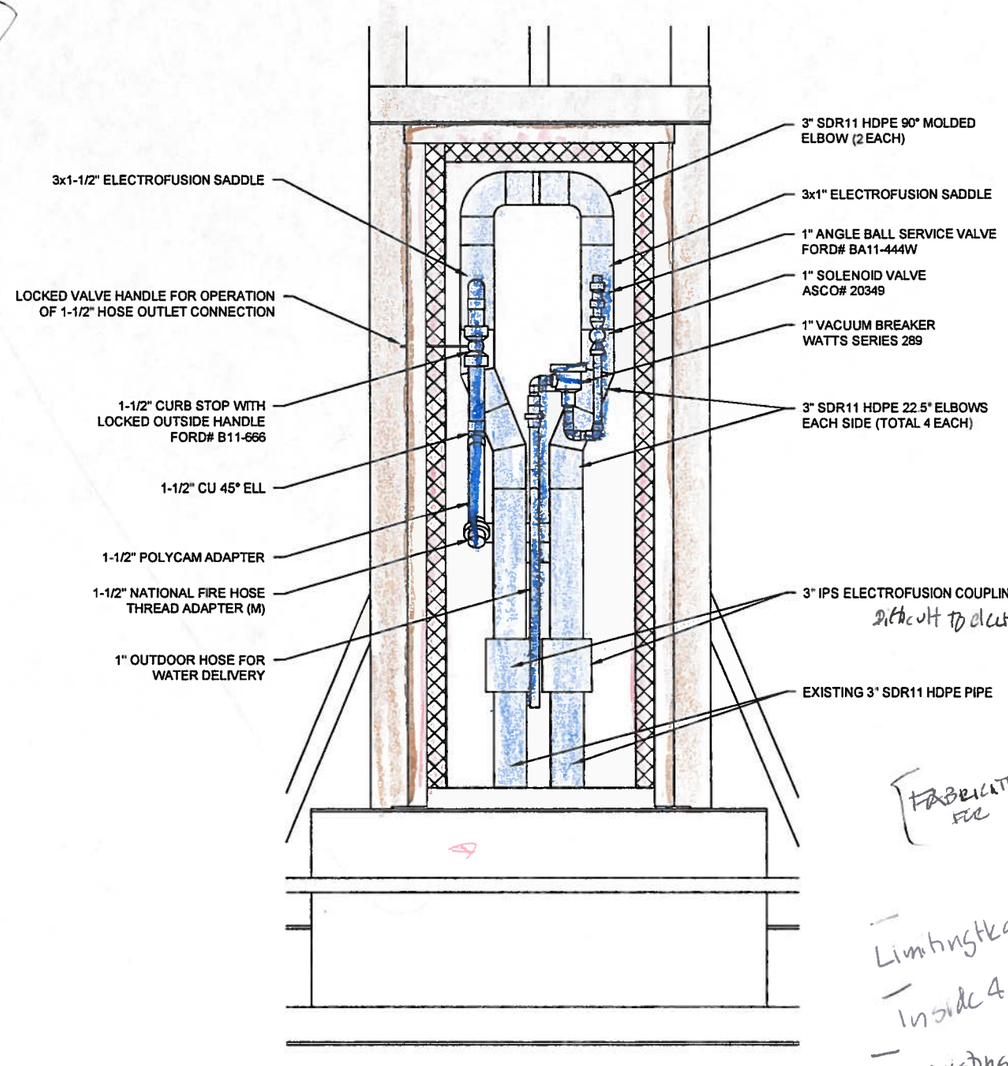

2 C1.3 FRONT ELEVATION
SCALE: 1-1/2" = 1'-0"

FABRICATE FOR

Limiting heat tape inside 40-50'

- Using existing riser pipes have some flex. Suck out the water a elbow in -

RECORD DRAWING CERTIFICATE
THESE DRAWINGS REFLECT RECORDED INFORMATION OBTAINED DURING CONSTRUCTION. INFORMATION PROVIDED HEREIN IS ACCURATE TO THE BEST OF MY KNOWLEDGE.
NAME DATE

SCALE: AS SHOWN
BAR IS ONE INCH ON ORIGINAL DRAWING 0 1"
IF NOT ONE INCH ON THIS SHEET, ADJUST SCALE ACCORDINGLY

CONSTRUCTION RECORD
FIELD BOOK
STAKING
FOREMAN
AS-BUILT
INSPECTOR

STATE OF ALASKA 49TH PAUL C. WEBNER CE-10276 REGISTERED PROFESSIONAL ENGINEER

2012 WATERING POINT UPGRADES
UPGRADED WATERING POINTS
CHEFORNAK, ALASKA

CE2 ENGINEERS, INC.
PO BOX 223348 ANCHORAGE, AK 99523 PH: 907-349-1010 FAX: 907-349-1015

REVISION	BY	DATE

Project No.
Date SEPT. 2012
Designed PCW
Drawn PCW
Approved PCW

Sheet No. C1.3
SHEET ___ OF ___

G:\ACAD\CHEFORNAK\2012 Watering Points Upgrade\C1.3.dwg, 10/4/2012 1:11:00 PM, cmerz, \\Ce2main\LANIER MP C2050/LD520C PCL 6

Examples of Different Tokens

Dear Mayor Jimmy,

I did not check prices. This is just an example of what Paul could design.

At first, only the two new watering points will have the new coins.

Susan

cc: Paul Weisner

FAX: 867.8704

Appendix F

Environmental Review Checklist

Indian Health Service

ENVIRONMENTAL INFORMATION AND DOCUMENTATION

Tribe: Native Village of Chefornak	Reservation:
Project, Program, Grant Description & Location:	The review covers a new water intake and water and sewer improvements in Chefornak, Alaska.

Considerations	Basis for Determination (Documentation)
1. Will the proposed action result in a known violation or continuance of a violation of applicable (Federal, Tribal, State or local) laws or requirements for protection of environment or public health and safety?	No. The Project Manager will ensure compliance with all applicable laws and regulatory requirements.
2. Will the proposed action result in a conflict with existing or proposed federal, Tribal, state, and local land use plans?	No. http://www.commerce.state.ak.us/dca/commdb/CF_Plans.cfm The Village Traditional Council has identified this project as an essential community facility.
3. Is there a controversy with respect to environmental effects of the proposed action based on reasonable and substantial issues?	No. The Cooperative Project Agreement (CPA) for this project, which is signed, afforded the Village the opportunity to address controversies with respect to environmental effects of the construction of the proposed project.
4. Is the proposed action significantly greater in scope than normal for the area or does it have significant unusual characteristics?	No. The proposed action is typical in scope in comparison with other ANTHC/ VSW sanitation improvement projects in rural Alaska and has no unusual or significant characteristics.
5. Does the proposed action establish a precedent for future action or represent a decision in principle about future actions with potentially significant environmental effects?	No. The proposed action is typical in scope in comparison with other ANTHC/ VSW sanitation improvement projects in rural Alaska and is not anticipated to result in any cumulative impacts that will result in degradation of environmental concerns as outlined in NEPA.
6. Does the proposed action have significant adverse direct or indirect effects on park land, other public lands, or areas of recognized scenic or recreational value?	No. (United States Fish and Wildlife Service [USFWS] 2008 National Wildlife Refuge Map, http://alaska.fws.gov/nwr/map.htm; United States Department of Interior National Parks Service, http://www.nps.gov/state/ak/; ADNR Division of Parks and Outdoor Recreation, Individual State Parks, http://www.dnr.state.ak.us/parks/units/index.htm). Although the community of Chefornak lies within the legislated boundaries of the Yukon Delta National Wildlife Refuge, the land within the Chefornak village boundaries was conveyed to the Calista Corporation under the Alaska Native Claims Settlement Act (ANCSA). This project will occur within the established village boundaries and therefore work is not anticipated to adversely affect the Yukon Delta National Wildlife Refuge.
7. Does the proposed action include construction of a new municipal solid waste landfill at a new solid waste disposal site?	No. The proposed action does not include construction of a new municipal solid waste landfill.

Tribe: Native Village of Chefornak	Reservation:
Project, Program, Grant Description & Location:	The review covers a new water intake and water and sewer improvements in Chefornak, Alaska.

Considerations	Basis for Determination (Documentation)
8. Will the proposed action create a need for additional capacity at solid waste disposal facilities?	No. The proposed action is not expected to create a need for additional capacity at solid waste disposal facilities. If necessary, a construction waste burial permit may be obtained or the waste may be hauled back to an approved facility.
9. Does the proposed action include construction of a new wastewater treatment facility that will discharge treated sewage effluent to the waters of the U.S.?	Yes. The proposed action includes construction of a new sewage lagoon that will discharge treated sewage effluent into surface waters.
10. Will the proposed action create a need for additional capacity at wastewater treatment facilities?	No. The proposed action will provide additional capacity at wastewater treatment facilities.
11. Will the proposed action create a need for additional capacity in the drinking water supply?	No. The proposed action will address the need for additional drinking water supply.
12. Are there other considerations about the proposed action that could adversely affect the environment and/or public health and safety?	No. The proposed action is not anticipated to adversely affect the environment and/or public health and safety. Building materials will be consistent with those that are standard for rural Alaska. No toxic building materials are expected to be utilized.
13. Will the proposed action create a need for additional capacity in health care facilities and for health care services?	No. (Cooperative Project Agreement) -The proposed action will not create a need for additional capacity at health care facilities or for health care services.
14. Will the proposed action create a need for additional energy supply or generation?	No. The proposed action will not create a need for additional energy supply or generation.
15. Will the proposed action create a need for additional capacity in educational facilities?	No. The proposed action will not create a need for additional capacity in educational facilities, as it will not affect immediate population levels.
16. Will the proposed action create a need for additional capacity in transportation systems?	No. The proposed action will not create a need for additional capacity in transportation systems. The project will utilize existing roads during construction.

Tribe: Native Village of Chefornak	Reservation:
Project, Program, Grant Description & Location:	The review covers a new water intake and water and sewer improvements in Chefornak, Alaska.

Considerations	Basis for Determination (Documentation)
17. Historic Preservation: a. Does the proposed action involve the purchase, construction, alteration, renovation, or lease of a building or portion of a building that is more than 50 years old? b. Will the proposed action adversely affect properties listed, or eligible for listing, on the National Register of Historic Places?	a. No. Consultation is Required. The project does not involve modifications to structures more than 50 years of age. The effects of the project on historic buildings will nevertheless be conducted in conjunction with the review described under no. 17b, following. b. b. No. Consultation is Required. A late prehistoric/contact era site (XBI-00182) has been documented in the area west of the school building. A historic preservation professional will review the effects of the project on the site and make a determination based on the review. The agency will establish a finding based on the determination and provide SHPO with a review period of 30 days prior to initiation of project construction activities.
18. Endangered Species Act: Is the proposed action likely to adversely affect a plant or animal species listed on the Federal or applicable state list of endangered or threatened species or a specific critical habitat of an endangered or threatened species?	No. (USFWS Alaska Region Endangered Species Listing, http://alaska.fws.gov/fisheries/endangered/listing.htm; Endangered Species Act Listed Species Consultation Guide, http://alaska.fws.gov/fisheries/endangered/pdf/consultation_guide/70_consult_guide_map_11x17.pdf; ADF&G Endangered Species in Alaska, http://www.adfg.state.ak.us/special/esa/esa_home.php; PA signed December 28, 2007). The community of Chefornak is within close proximity of the Kinak Bay coast, which is along a migration route for the Steller's eider, a threatened species. The USFWS will be consulted once plans are available.
19. Will the proposed action require major sedimentation and erosion control measures?	No. Revegetation will need to occur to stabilize soils. Other erosion control measures may be used as deemed necessary such as keeping soil hydrated to reduce dust.
20. Will the proposed action violate a stormwater permit or a wastewater discharge permit either for construction or on-going operations?	No. Construction activities in rivers or ground disturbance over one acre will involve coverage under the NPDES stormwater program. Prepare a SWPPP and submit an NOI.
21. Safe Drinking Water Act: Will the proposed action impact an EPA designated sole source aquifer?	No. http://cfpub.epa.gov/safewater/sourcewater/sourcewater , Alaska Department of Environmental Conservation. Currently, there are no designated sole source aquifers in Alaska.
22. Wetlands and Water Resources (lakes, rivers, ponds, streams, etc.): Will the proposed action violate a Section 404 (Clean Water Act) permit for actions in a wetland and/or Section 10 (Rivers and Harbors Act) permit for actions in a stream or river?	No. USFWS National Wetlands Inventory http://www.fws.gov/wetlands/Data/mapper.html It is anticipated that the proposed action will use fill in a wetlands or near a water source area. All construction shall be done upon consultation with the USACE and in conformance with the requisite USACE permit.

Tribe: Native Village of Chefornak	Reservation:
Project, Program, Grant Description & Location:	The review covers a new water intake and water and sewer improvements in Chefornak, Alaska.

Considerations	Basis for Determination (Documentation)
23. Floodplains: a. Is the proposed action located in either a 100-year or, for critical actions, a 500-year floodplain? (If Flood Insurance Rate Maps do not exist for the project site, a floodplain survey or consultation may be required. Also may need to consider if the facility will require flood insurance). b. Will the proposed action adversely impact flood flows in a floodplain or support development in a floodplain?	a. No. (http://msc.fema.gov/webapp/wcs/stores/servlet/CategoryDisplay?storeId=10001&catalogId=10001&langId=-1&categoryId=12001&parent_category_rn=12001&type=1&stateId=&countyId=&communityId=&stateName=&countyName=&communityName=&dfirm_kit_id=&dfirmCatId=null&isCountySelected=0&isCommSelected=0&userType=G&urlUserType=G&sfc=0&cat_state=13008; http://www.poa.usace.army.mil/About/Offices/Engineering/FloodplainManagement.aspx) The USACE flood hazard database indicates that the village is located on a small rock outcropping and has three to four feet of freeboard above the flood stage. There is no known record of flooding in the community. b. No. Reviewer's Experience. The proposed action is not located in a floodplain.
24. Existing site: Would the proposed action involve the purchase, construction or lease of new facilities (including portable facilities and trailers), substantially increase the capacity of an existing health care facility?	No. (Cooperative Project Agreement). The proposed action does not involve the purchase, construction, or lease of new facilities and will not increase the capacity of an existing health care facility.
25. New site: Does the proposed action involve purchase, construction, or lease of new facilities (including portable facilities and trailers) where such action is for buildings equal to or more than 12,000 square feet (1080 square meters) of useable space when more than 5 acres (2 hectares) of surface land area are involved at a new site?	No. (Cooperative Project Agreement). The proposed action does not involve the purchase, construction, or lease of new facilities greater than or equal to 12,000 square feet.
26. New site: Does the proposed action involve purchase, construction, or lease of health care facilities (other than buildings) for projects equal to or more than 5 acres (2 hectares) of surface land area at a new site?	No. (Cooperative Project Agreement). The proposed action does not involve the purchase, construction, or lease of health care facilities.

Tribe: Native Village of Chefornak	Reservation:
Project, Program, Grant Description & Location:	The review covers a new water intake and water and sewer improvements in Chefornak, Alaska.

Considerations	Basis for Determination (Documentation)
27. Does the proposed action involve the sale or transfer of real property, on which any hazardous substance was stored for one year or more, known to have been released, or disposed of? (Provide relevant documentation for any hazardous substance releases. See 40 CFR 373.2(b), 302.4, and 261.30 for reportable quantities.)	No. (http://www.dec.state.ak.us/spar/csp/list.htm; http://www.epa.gov/superfund/index.htm) Alaska Department of Environmental Conservation and EPA Superfund websites. There are five open contaminated sites in Chefornak listed in the ADEC Contaminated Sites Database (Hazard IDs:3778, 3779, 3780, 3781, and 3782). See attached map. Each site shall be labeled on construction plans and all construction related activities shall maintain 50 feet distance from these sites. If hazardous waste or petroleum products are uncovered through the course of construction, the project manager will contact the ADEC and follow their recommendations to ensure full legal compliance.
28. Does the proposed action involve the sale or transfer of real property, on which underground or above ground storage tanks are located?	No. (www.dec.state.ak.us/spar/ipp/ust/search/default.htm). There is no open UST facility currently listed on the ADEC UST Database.
29. Will the proposed action violate Tribal, local, state, or federal law on the use and storage of hazardous substances or the transportation, storage, and disposal of hazardous wastes or medical wastes? (Activities that may generate reportable quantities include air conditioning repair and service, pesticide application, motor pools, automobile repair, welding, landscaping, agricultural activities, print shops, hospitals, clinics, & medical centers. Repair, renovation, or demolition activities can generate waste that has asbestos-containing materials, asbestos, lead-based paint, PCBs, CFCs, etc.)	No. The proposed project does not violate local, state, or federal law on the use and storage of hazardous substances or transportation, storage, and disposal of hazardous wastes or medical wastes.
30. Will the proposed action adversely affect community air pollution for a long period of time?	No. (18AAC50, Air Quality Control, Alaska Department of Environmental Conservation, Updated July 1, 2010). This project is not located in an area subject to the conformity rule per the State of Alaska Implementation Plan.

Tribe: Native Village of Chefornak	Reservation:
Project, Program, Grant Description & Location:	The review covers a new water intake and water and sewer improvements in Chefornak, Alaska.

Considerations	Basis for Determination (Documentation)
31. If the proposed action is implemented, will it have a disproportionately high and adverse human health or environmental impact on the Tribe, low-income populations, or minority populations?	No. This project will benefit the health and environment for the tribe and the community as a whole.
32. Will the proposed action adversely affect community noise levels?	No. The Project Manager will ensure community noise levels are not adversely affected with no blasting and limiting heavy equipment usage to daytime (10) hours.
33. Wilderness Act: Will the proposed action adversely impact a Wilderness Area?	No. http://www.wilderness.net/index.cfm?fuse=NWPS. The city of Chefornak is not located in or near a Wilderness Area.
34. Farmland Protection Policy Act: Will the proposed action convert significant agricultural lands to non-agricultural uses and exceed 160-point score on the farmland impact rating?	No. (http://www.ak.nrcs.usda.gov/technical/soils/soilslocal.html) There are no Prime or Unique farmlands in the State of Alaska. Further, there are no Farmlands of Statewide Importance.
35. Coastal Zone Management Act: Will the proposed action directly affect a Coastal Zone in a manner inconsistent with the State Coastal Zone Management Plan?	No. (per Alaska Statute 44.66.030). The city of Chefornak is located within the Ceñaliulriit CRSA, however the Alaska Coastal Management program no longer exists as of July 1, 2011.
36. Wild and Scenic Rivers Act: Will the proposed action affect a wild, scenic, or recreational river area or create conditions inconsistent with the character of the river? (A consideration for activities that are in or near any wild and scenic waterway including construction of stream/river crossings, intake structures, outfalls, etc.)	No. http://www.rivers.gov/rivers/alaska.php) National Wild and Scenic Rivers (Alaska) List). The proposed action does not take place in the vicinity of any wild, scenic, or recreational river area.

I certify that to the best of my knowledge the information presented above is true and correct.

David A Bruce 7/2/13
ANTHC Director of Project Management — Date

7/2/13
ANTHC Environmental Coordinator — Date

Indian Health Service

ENVIRONMENTAL INFORMATION AND DOCUMENTATION

Tribe: Native Village of Chefornak

Reservation:

Project, Program, Grant Description & Location: The review covers a new water intake and water and sewer improvements in Chefornak, Alaska.

Considerations	Basis for Determination (Documentation)
1. Will the proposed action result in a known violation or continuance of a violation of applicable (Federal, Tribal, State or local) laws or requirements for protection of environment or public health and safety?	No. Project Manager Communication – The Project Manager will ensure compliance with all applicable laws and regulatory requirements.
2. Will the proposed action result in a conflict with existing or proposed federal, Tribal, state, and local land use plans?	No. Website – http://www.commerce.state.ak.us/dca/commdb/CF_Plans.cfm The Village Traditional Council has identified this project as an essential community facility.
3. Is there a controversy with respect to environmental effects of the proposed action based on reasonable and substantial issues?	No. Printed Materials—The Cooperative Project Agreement (CPA) for this project, which is signed, afforded the Village the opportunity to address controversies with respect to environmental effects of the construction of the proposed project.
4. Is the proposed action significantly greater in scope than normal for the area or does it have significant unusual characteristics?	No. Project Manager Communication -The proposed action is typical in scope in comparison with other ANTHC/ VSW sanitation improvement projects in rural Alaska and has no unusual or significant characteristics.
5. Does the proposed action establish a precedent for future action or represent a decision in principle about future actions with potentially significant environmental effects?	No. Project Manager Communication - The proposed action is typical in scope in comparison with other ANTHC/ VSW sanitation improvement projects in rural Alaska and is not anticipated to result in any cumulative impacts that will result in degradation of environmental concerns as outlined in NEPA.
6. Does the proposed action have significant adverse direct or indirect effects on park land, other public lands, or areas of recognized scenic or recreational value?	No. Printed Materials (United States Fish and Wildlife Service [USFWS] 2008 National Wildlife Refuge Map, http://alaska.fws.gov/nwr/map.htm; United States Department of Interior National Parks Service, http://www.nps.gov/state/ak/; ADNR Division of Parks and Outdoor Recreation, Individual State Parks, http://www.dnr.state.ak.us/parks/units/index.htm). Although the community of Chefornak lies within the legislated boundaries of the Yukon Delta National Wildlife Refuge, the land within the Chefornak village boundaries was conveyed to the Calista Corporation under the Alaska Native Claims Settlement Act (ANCSA). This project will occur within the established village boundaries and therefore work is not anticipated to adversely affect the Yukon Delta National Wildlife Refuge.
7. Does the proposed action include construction of a new municipal solid waste landfill at a new solid waste disposal site?	No. Project Manager Communication - The proposed action does not include construction of a new municipal solid waste landfill.

Tribe: Native Village of Chefornak	Reservation:
Project, Program, Grant Description & Location:	The review covers a new water intake and water and sewer improvements in Chefornak, Alaska.

Considerations	Basis for Determination (Documentation)
8. Will the proposed action create a need for additional capacity at solid waste disposal facilities?	No. Project Manager Communication -The proposed action is not expected to create a need for additional capacity at solid waste disposal facilities. If necessary, a construction waste burial permit may be obtained or the waste may be hauled back to an approved facility.
9. Does the proposed action include construction of a new wastewater treatment facility that will discharge treated sewage effluent to the waters of the U.S.?	No. Project Manager Communication - The proposed action does not include construction of a new wastewater treatment facility that will discharge treated sewage effluent into surface waters.
10. Will the proposed action create a need for additional capacity at wastewater treatment facilities?	No. Project Manager Communication -The proposed action will not create a need for additional capacity at wastewater treatment facilities.
11. Will the proposed action create a need for additional capacity in the drinking water supply?	No. Project Manager Communication -The proposed action will address the need for additional drinking water supply.
12. Are there other considerations about the proposed action that could adversely affect the environment and/or public health and safety?	No. Project Manager Communication -The proposed action is not anticipated to adversely affect the environment and/or public health and safety. Building materials will be consistent with those that are standard for rural Alaska. No toxic building materials are expected to be utilized.
13. Will the proposed action create a need for additional capacity in health care facilities and for health care services?	No. Printed Materials (Cooperative Project Agreement) -The proposed action will not create a need for additional capacity at health care facilities or for health care services.
14. Will the proposed action create a need for additional energy supply or generation?	No. Project Manager Communication -The proposed action will not create a need for additional energy supply or generation.
15. Will the proposed action create a need for additional capacity in educational facilities?	No. Printed Materials (Cooperative Project Agreement). -The proposed action will not create a need for additional capacity in educational facilities, as it will not affect immediate population levels.
16. Will the proposed action create a need for additional capacity in transportation systems?	No. Project Manager Communication -The proposed action will not create a need for additional capacity in transportation systems. The project will utilize existing roads during construction.

Tribe: Native Village of Chefornak Reservation:

Project, Program, Grant Description & Location: The review covers a new water intake and water and sewer improvements in Chefornak, Alaska.

Considerations	Basis for Determination (Documentation)
17. Historic Preservation: a. Does the proposed action involve the purchase, construction, alteration, renovation, or lease of a building or portion of a building that is more than 50 years old? b. Will the proposed action adversely affect properties listed, or eligible for listing, on the National Register of Historic Places?	a. No. Project Manager Communication -The proposed action does not involve the purchase, construction, alteration, renovation, or lease of a building or portion of a building greater than 50 years old. The State Historical Preservation Officer will be consulted for concurrence. b. No. Project Manager Communication – The SHPO will be consulted for concurrence prior to construction activities.
18. Endangered Species Act: Is the proposed action likely to adversely affect a plant or animal species listed on the Federal or applicable state list of endangered or threatened species or a specific critical habitat of an endangered or threatened species?	No. Printed Materials (USFWS Alaska Region Endangered Species Listing, http://alaska.fws.gov/fisheries/endangered/listing.htm; Endangered Species Act Listed Species Consultation Guide, http://alaska.fws.gov/fisheries/endangered/pdf/consultation_guide/70_consult_guide_map_11x17.pdf; ADF&G Endangered Species in Alaska, http://www.adfg.state.ak.us/special/esa/esa_home.php; PA signed December 28, 2007). The community of Chefornak is within close proximity of the Kinak Bay coast, which is along a migration route for the Steller's eider, a threatened species. The USFWS will be consulted once plan sets are available.
19. Will the proposed action require major sedimentation and erosion control measures?	No. Project Manager Communication – If soils are disturbed, revegetation will need to occur to stabilize them. Other erosion control measures may be used as deemed necessary such as keeping soil hydrated to reduce dust.
20. Will the proposed action violate a stormwater permit or a wastewater discharge permit either for construction or on-going operations?	No. Project Manager Communication – Construction activities in rivers or ground disturbance over one acre will involve coverage under the NPDES stormwater program. If necessary, prepare a SWPPP for coverage under the appropriate NPDES wastewater discharge permit and submit an NOI.
21. Safe Drinking Water Act: Will the proposed action impact an EPA designated sole source aquifer?	No. Website: http://cfpub.epa.gov/safewater/sourcewater/sourcewater , Alaska Department of Environmental Conservation. Currently, there are no designated sole source aquifers in Alaska.
22. Wetlands and Water Resources (lakes, rivers, ponds, streams, etc.): Will the proposed action violate a Section 404 (Clean Water Act) permit for actions in a wetland and/or Section 10 (Rivers and Harbors Act) permit for actions in a stream or river?	No. Website -USFWS National Wetlands Inventory http://www.fws.gov/wetlands/Data/mapper.html It is anticipated that the proposed action will use fill in a wetlands or near a water source area. All construction should be done upon consultation with the USACE and in conformance with any requisite USACE permit.

Tribe: Native Village of Chefornak Reservation:

Project, Program, Grant Description & Location: The review covers a new water intake and water and sewer improvements in Chefornak, Alaska.

Considerations	Basis for Determination (Documentation)
23. Floodplains: a. Is the proposed action located in either a 100-year or, for critical actions, a 500-year floodplain? (If Flood Insurance Rate Maps do not exist for the project site, a floodplain survey or consultation may be required. Also may need to consider if the facility will require flood insurance). b. Will the proposed action adversely impact flood flows in a floodplain or support development in a floodplain?	a. No. Website; USACE Flood Hazard Data, http://www.poa.usace.army.mil/en/cw/fld_haz/communities.htm). The USACE flood hazard database indicates that the village is located on a small rock outcropping and has three to four feet of freeboard above the flood stage. There is no known record of flooding in the community. b. No. Reviewer's Experience. The proposed action is not located in a floodplain.
24. Existing site: Would the proposed action involve the purchase, construction or lease of new facilities (including portable facilities and trailers), substantially increase the capacity of an existing health care facility?	No. Printed Materials (Cooperative Project Agreement). The proposed action does not involve the purchase, construction, or lease of new facilities and will not increase the capacity of an existing health care facility.
25. New site: Does the proposed action involve purchase, construction, or lease of new facilities (including portable facilities and trailers) where such action is for buildings equal to or more than 12,000 square feet (1080 square meters) of useable space when more than 5 acres (2 hectares) of surface land area are involved at a new site?	No. Printed Materials (Cooperative Project Agreement). The proposed action does not involve the purchase, construction, or lease of new facilities greater than or equal to 12,000 square feet.
26. New site: Does the proposed action involve purchase, construction, or lease of health care facilities (other than buildings) for projects equal to or more than 5 acres (2 hectares) of surface land area at a new site?	No. Printed Materials (Cooperative Project Agreement). The proposed action does not involve the purchase, construction, or lease of health care facilities.

Tribe: Native Village of Chefornak Reservation:

Project, Program, Grant Description & Location: The review covers a new water intake and water and sewer improvements in Chefornak, Alaska.

Considerations	Basis for Determination (Documentation)
27. Does the proposed action involve the sale or transfer of real property, on which any hazardous substance was stored for one year or more, known to have been released, or disposed of? (Provide relevant documentation for any hazardous substance releases. See 40 CFR 373.2(b), 302.4, and 261.30 for reportable quantities.)	No. Printed Materials (ADEC Contaminated Sites Program, http://www.dec.state.ak.us/spar/csp/index.htm; EPA Superfund website, www.epa.gov/superfund/index.htm). There are five open contaminated sites in Chefornak listed in the ADEC Contaminated Sites Database (Hazard IDs:3778, 3779, 3780, 3781, and 3782). If hazardous waste or petroleum products are uncovered through the course of construction, the project manager will contact the ADEC and follow their recommendations to ensure full legal compliance.
28. Does the proposed action involve the sale or transfer of real property, on which underground or above ground storage tanks are located?	No. Website, www.dec.state.ak.us/spar/ipp/ust/search/default.htm) - The proposed action does not involve transfer of real property. No underground storage tanks (UST) are currently listed on the ADEC UST Database.
29. Will the proposed action violate Tribal, local, state, or federal law on the use and storage of hazardous substances or the transportation, storage, and disposal of hazardous wastes or medical wastes? (Activities that may generate reportable quantities include air conditioning repair and service, pesticide application, motor pools, automobile repair, welding, landscaping, agricultural activities, print shops, hospitals, clinics, & medical centers. Repair, renovation, or demolition activities can generate waste that has asbestos-containing materials, asbestos, lead-based paint, PCBs, CFCs, etc.)	No. Printed Materials (Cooperative Project Agreement). The proposed action is typical in scope in comparison with other ANTHC sanitation improvement projects in rural Alaska, and is not expected to violate local, state, or federal law on the use, storage, transportation, or disposal of hazardous substances or medical wastes.
30. Will the proposed action adversely affect community air pollution for a long period of time?	No. Printed Materials (18AAC50, Air Quality Control, ADEC, July 1, 2010). The proposed action is not located in an area subject to the General Conformity rule per the State of Alaska Implementation Plan.

Tribe: Native Village of Chefornak Reservation:

Project, Program, Grant Description & Location: The review covers a new water intake and water and sewer improvements in Chefornak, Alaska.

Considerations	Basis for Determination (Documentation)
31. If the proposed action is implemented, will it have a disproportionately high and adverse human health or environmental impact on the Tribe, low-income populations, or minority populations?	No. Reviewer's Experience -This project is intended to improve the health and environment for the community as a whole.
32. Will the proposed action adversely affect community noise levels?	No. Project Manager Communication -The proposed action may result in limited noise impacts due to construction activities, but the impacts will be limited to daytime hours, are short term in nature, and are not expected to adversely affect the community.
33. Wilderness Act: Will the proposed action adversely impact a Wilderness Area?	No. Website (US National Wilderness Preservation System Map http://www.wilderness.net/index.cfm?fuse=NWPS . The city of Chefornak is not located in or near a Wilderness Area.
34. Farmland Protection Policy Act: Will the proposed action convert significant agricultural lands to non-agricultural uses and exceed 160-point score on the farmland impact rating?	No. Website (US Department of Agriculture Natural Resources Conservation Service, http://www.nrcs.usda.gov). There are no Prime or Important farmlands in the State of Alaska.
35. Coastal Zone Management Act: Will the proposed action directly affect a Coastal Zone in a manner inconsistent with the State Coastal Zone Management Plan?	No. Website (Alaska Coastal Zone Management website, www.alaskacoast.state.ak.us). The city of Chefornak is located within the Ceñaliulriit CRSA. Prior to construction activities, this project will require submittal of a CPQ to the ADNR DCOM for a determination of consistency with the ACMP.
36. Wild and Scenic Rivers Act: Will the proposed action affect a wild, scenic, or recreational river area or create conditions inconsistent with the character of the river? (A consideration for activities that are in or near any wild and scenic waterway including construction of stream/river crossings, intake structures, outfalls, etc.)	No. Website (National Wild and Scenic River (Alaska) List, http://www.rivers.gov/wildriverslist.html#ak). The proposed action does not take place in the vicinity of any wild, scenic, or recreational river area.

I certify that to the best of my knowledge the information presented above is true and correct.

David L Bewley 9/1/10
Sanitation Facilities Program Manager Date

Chris Vaughlet 9/1/10
ANTHC Environmental Coordinator Date

Indian Health Service

ENVIRONMENTAL INFORMATION AND DOCUMENTATION

Community: Village of Chefornak

Project, Program, Grant Description & Location: The review covers the construction of the water storage tank in Chefornak, Alaska.

Considerations	Basis for Determination (Documentation)
1. Will the proposed action result in a known violation or continuance of a violation of applicable (Federal, Tribal, State or local) laws or requirements for protection of environment or public health and safety?	No. Project Manager Communication – The Project Manager will ensure that construction of this proposed project be in compliance with all applicable laws and requirements and will have the appropriate regulatory approvals.
2. Will the proposed action result in a conflict with existing or proposed federal, Tribal, state, and local land use plans?	No. Website – http://www.commerce.state.ak.us/dca/commdb/CF_Plans.cfm The Village Traditional Council has identified this project as an essential community facility.
3. Is there a controversy with respect to environmental effects of the proposed action based on reasonable and substantial issues?	No. Printed Materials—The Cooperative Project Agreement (CPA) for this project, which is signed, afforded the Village the opportunity to address controversies with respect to environmental effects of the construction of the proposed project.
4. Is the proposed action significantly greater in scope than normal for the area or does it have significant unusual characteristics?	No. The Project Manager will ensure that the construction of the proposed project is typical in scope in comparison with other ANTHC sanitation improvement projects in rural Alaska and has no unusual, significant characteristics.
5. Does the proposed action establish a precedent for future action or represent a decision in principle about future actions with potentially significant environmental effects?	No. The construction of the proposed project will not result in any cumulative impacts that will result in degradation of environmental concerns as outlined in NEPA.
6. Does the proposed action have significant adverse direct or indirect effects on park land, other public lands, or areas of recognized scenic or recreational value?	No. Websites – Areas of recognized scenic or recreational value: Alaska Wildlife Refuges, U.S. Fish and Wildlife Service National Wildlife Refuge http://alaska.fws.gov/nwr/map.htm , USDOI NPS http://www.nps.gov/state/ak/ Alaska Department of Natural Resource Division of Parks and Outdoor Recreation, Individual State Parks http://www.dnr.state.ak.us/parks/units/index.htm Although the community of Chefornak lies within the Yukon Delta National Wildlife Refuge, legislation recognizes the communities lying within the refuge boundary are compatible with this Federal designation. This project will occur within the established community boundaries and therefore work will not adversely affect the noted National Wildlife Refuge.
7. Does the proposed action include construction of a new municipal solid waste landfill at a new solid waste disposal site?	No. This project does not address the need for constructing a new municipal solid waste landfill.
8. Will the proposed action create a need for additional capacity at solid waste disposal facilities?	No. The PM ensures that the quantity of solid waste generated is not greater than the existing facility can handle.

Community: Village of Chefornak

Project, Program, Grant Description & Location: The review covers the construction of the water storage tank in Chefornak, Alaska.

9. Does the proposed action include construction of a new wastewater treatment facility that will discharge treated sewage effluent to the waters of the U.S.	No. This project does not address the need for constructing a new wastewater treatment facility that will discharge treated surface effluent into surface waters.
10. Will the proposed action create a need for additional capacity at wastewater treatment facilities?	No. The Project Manager ensures that the construction of the proposed project will not affect the capacity of the community's wastewater treatment facilities.
11. Will the proposed action create a need for additional capacity in the drinking water supply?	No. The proposed project does not create a need for additional capacity in the drinking water supply.
12. Are there other considerations about the proposed action that could adversely affect the environment and/or public health and safety?	No. The construction of the proposed project will not adversely affect the environment and/or public health and safety. No toxic building materials will be utilized.
13. Will the proposed action create a need for additional capacity in health care facilities and for health care services?	No. The construction of the proposed project will not create a need for additional capacity in health care facilities and for health care services because it will not affect community population levels.
14. Will the proposed action create a need for additional energy supply or generation?	No. The proposed project will not create a need for additional energy supply or generation.
15. Will the proposed action create a need for additional capacity in educational facilities?	No. The construction of the proposed project will not affect any need for additional capacity in educational facilities because the same population will be served as previously.
16. Will the proposed action create a need for additional capacity in transportation systems?	No. The construction of the proposed project will not create a need for additional transportation. The project will utilize existing boardwalks.
17.Historic Preservation: a. Does the proposed action involve the purchase, construction, alteration, renovation, or lease of a building or portion of a building that is more that 50 years old?	Consultation required. Although prior reviews and evaluations indicate a low potential historic buildings in the project APE, a review by a historic preservation professional should be carried out, insofar as there is no indication that Chefornak buildings have been evaluated previously. An agency finding will be produced, based on the results of the review. Following submission of the finding to SHPO a review period of 30 days will be provided prior to initiation of construction activities.
b. Will the proposed action adversely affect properties listed, or eligible for listing, on the National Register of Historic Places?	Consultation required. Potential for the presence of National Register properties in the project APE are low, based on the results of prior evaluations and reviews. AHRS files will be reviewed to determine if new sites have been documented in the vicinity of the project APE. The results of this review will be included in the findings described for no. 17a, preceding.

Community:	Village of Chefornak
Project, Program, Grant Description & Location:	The review covers the construction of the water storage tank in Chefornak, Alaska.

18. Endangered Species Act: Is the proposed action likely to adversely affect a plant or animal species listed on the Federal or applicable state list of endangered or threatened species or a specific critical habitat of an endangered or threatened species?	No. Printed Materials (http://alaska.fws.gov/fisheries/endangered/listing.htm, http://www.adfg.state.ak.us/special/esa/esa_home.php) – Alaska Region Endangered Species Listing. Proposed Candidate and Delisted Species in Alaska, April 2008 and Programmatic Consultation (PC) signed January 28, 2008. The community of Chefornak is in the vicinity of breeding habitat for the endangered and/or threatened species of Spectacled Eider. All construction will take place within established community boundaries. A Section 7 Consultation with USFWS will not be conducted. This is based on the Programmatic Consultation with USFWS, which expires on December 2013. The water storage tank shall be non-fenced to allow flightless birds to enter and exit the area.
19. Will the proposed action require major sedimentation and erosion control measures?	No. All upgrades will be conducted within the existing water treatment plant.
20. Will the proposed action violate a storm water permit or a wastewater discharge permit either for construction or on-going operations?	No. This project will disturb more than one acre and will therefore require a SWPPP, and an NOI be submitted to ADEC.
21. Safe Drinking Water Act: Will the proposed action impact an EPA designated sole source aquifer?	No. Website (http://cfpub.epa.gov/safewater/sourcewater/sourcewater). Alaska Department of Environmental Conservation. Currently there are no designated sole source aquifers in Alaska.
22. Wetlands and Water Resources (lakes, rivers, ponds, streams, etc.): Will the proposed action violate a Section 404 (Clean Water Act) permit for actions in a wetland and/or Section 10 (Rivers and Harbors Act) permit for actions in a stream or river?	No. Project Manager Communication (http://www.poa.usace.army.mil/reg/NeedPermit.htm; (http://www.fws.gov/wetlands/Data/mapper.html) - A jurisdictional determination will be submitted to USACE for concurrence. This will be in coordination with the watering points and other concurrent project construction, which is also located within the community of Chefornak.
23.Floodplains: a. Is the proposed action located in either a 100-year or, for critical actions, a 500-year floodplain? (If Flood Insurance Rate Maps do not exist for the project site, a floodplain survey or consultation may be required. Also may need to consider if the facility will require flood insurance).	No. – Printed Materials (http://msc.fema.gov/webapp/wcs/stores/servlet/CategoryDisplay?storeId=10001&catalogId=10001&langId=-1&categoryId=12001&parent_category_rn=12001&type=1&stateId=&countyId=&communityId=&stateName=&countyName=&communityName=&dfirm_kit_id=&dfirmCatId=null&isCountySelected=0&isCommSelected=0&userType=G&urlUserType=G&sfc=0&cat_state=13008; http://www.poa.usace.army.mil/en/cw/fld_haz/communities.htm . The community is at the confluence of the Keguk and Kinia Rivers. The Kinia River drains Dall Lake and numerous smaller lakes. Due to lake regulation the maximum flood level should not vary rapidly in stage. The village is located on a small rock outcropping and has 3-4 ft of freeboard above the flood stage. There is no record of flooding in the community.
b. Will the proposed action adversely impact flood flows in a floodplain or support development in a floodplain?	No. The project will not adversely impact flood flows or support floodplain development because it is within community boundaries and not disturbing the pre-existing topography.

Community: Village of Chefornak

Project, Program, Grant Description & Location: The review covers the construction of the water storage tank in Chefornak, Alaska.

24. Existing site: Would the proposed action involve the purchase, construction or lease of new facilities (including portable facilities and trailers), substantially increase the capacity of an existing health care facility?	No. New facility at the existing site is not proposed.
25. New site: Does the proposed action involve purchase, construction, or lease of new facilities (including portable facilities and trailers) where such action is for buildings equal to or more than 12,000 square feet (1080 square meters) of useable space when more than 5 acres (2 hectares) of surface land area are involved at a new site?	No. New facility at a new site is not proposed.
26. New site: Does the proposed action involve purchase, construction, or lease of health care facilities (other than buildings) for projects equal to or more than 5 acres (2 hectares) of surface land area at a new site?	No. New health care facility at a new site is not proposed.
27. Does the proposed action involve the sale or transfer of real property, on which any hazardous substance was stored for one year or more, known to have been released, or disposed of? (Provide relevant documentation for any hazardous substance releases. See 40 CFR 373.2(b), 302.4, and 261.30 for reportable quantities.)	No. Website - (http://www.dec.state.ak.us/spar/csp/list.htm; http://www.epa.gov/superfund/index.htm) Alaska Department of Environmental Conservation and EPA Superfund websites. Four contaminated sites have the status of "open" and are not within the vicinity of the proposed construction. Work will therefore not impact the contaminated sites.
28. Does the proposed action involve the sale or transfer of real property, on which underground or above ground storage tanks are located?	No. Website - (www.dec.state.ak.us/spar/ipp/ust/search/default.htm). There is no UST facility currently listed on the ADEC UST Database for this community.

Community: Village of Chefornak

Project, Program, Grant Description & Location: The review covers the construction of the water storage tank in Chefornak, Alaska.

29. Will the proposed action violate Tribal, local, state, or federal law on the use and storage of hazardous substances or the transportation, storage, and disposal of hazardous wastes or medical wastes? (Activities that may generate reportable quantities include air conditioning repair and service, pesticide application, motor pools, automobile repair, welding, landscaping, agricultural activities, print shops, hospitals, clinics, & medical centers. Repair, renovation, or demolition activities can generate waste that has asbestos-containing materials, asbestos, lead-based paint, PCBs, CFCs, etc.)	No. The proposed project does not violate local, state, or federal law on the use and storage of hazardous substances or transportation, storage and disposal of hazardous wastes or medical wastes.
30. Will the proposed action adversely affect community air pollution for a long period of time?	No. Printed Materials – 18AAC50, Air Quality Control, Alaska Department of Environmental Conservation, Updated July 1, 2010. This project is not located in an area subject to the conformity rule per the State of Alaska Implementation Plan.
31. If the proposed action is implemented, will it have a disproportionately high and adverse human health or environmental impact on the Tribe, low-income populations, or minority populations?	No. This project will benefit the health and environment for the tribe and the community as a whole.
32. Will the proposed action adversely affect community noise levels?	No. Project Manager Communication – The Project Manager will ensure community noise levels are not adversely affected with no blasting and limiting heavy equipment usage to daytime (10) hours.
33. Wilderness Act: Will the proposed action adversely impact a Wilderness Area?	No. Website – http://www.wilderness.net/index.cfm?fuse=NWPS This community is not located in a wilderness area in Alaska.
34. Farmland Protection Policy Act: Will the proposed action convert significant agricultural lands to non-agricultural uses and exceed 160-point score on the farmland impact rating?	No. Website – (http://www.ak.nrcs.usda.gov/technical/soils/soilslocal.html) There are no Prime or Unique farmlands in the State of Alaska. Further, there are no Farmlands of Statewide Importance.
35. Coastal Zone Management Act: Will the proposed action directly affect a Coastal Zone in a manner inconsistent with the State Coastal Zone Management Plan?	No. Website (www.alaskacoast.state.ak.us)– Alaska Coastal Zone and Coastal District boundaries, National Oceanic and Atmospheric Administration, June 2005. The community of Chefornak is located within the Cenaliulriit Coastal District and therefore a Coastal Project Questionnaire will be submitted to the State of Alaska Department of Natural Resources.

Community: Village of Chefornak

Project, Program, Grant Description & Location: The review covers the construction of the water storage tank in Chefornak, Alaska.

36. Wild and Scenic Rivers Act: Will the proposed action affect a wild, scenic, or recreational river area or create conditions inconsistent with the character of the river? (A consideration for activities that are in or near any wild and scenic waterway including construction of stream/river crossings, intake structures, outfalls, etc.)	No. Website (http://www.rivers.gov/wildriverslist.html#ak) National Wild and Scenic Rivers (Alaska) List. This project is not a "Water Resource Project" that will impact a wild, scenic, or recreational river, hence will not create conditions that are inconsistent with the character of the river.

I certify that to the best of my knowledge the information presented above is true and correct.

ANTHC Director of Project Management — Date 7/28/11

ANTHC Environmental Coordinator — Date 8/15/11