CITY OF CHEFORNAK
FACULTATIVE LAGOON PROJECT

THREE CELL LAGOON SYSTEM &
2,050 LF FORCE MAIN EXTENSION

In Cooperation with the State of Alaska
Department of Environmental Conservation
Village Safe Water Program

"DRAFT- NOT FOR RELEASE"

ISSUED FOR AGENCY REVIEW 65%

SHEET INDEX

No.	Title
	COVER SHEET
G1.0	GENERAL NOTES
G1.1	LEGEND, DESIGN CRITERIA
G1.2	VICINITY MAP
G2.1	SURVEY CONTROL
G3.1	TEST HOLE BORING LOGS
G3.2	TEST HOLE BORING LOGS
G3.3	TEST HOLE BORING LOGS
G4.0	LAGOON OPERATING PLAN
C1.0	KEY MAP
C1.1	LAGOON SITE PLAN
C1.2	LAGOON CROSS SECTIONS
C1.3	LAGOON INLET STRUCTURE
C1.4	CELL TRANSFER STRUCTURE
C1.5	DISCHARGE STRUCTURE / OVERFLOW
C1.6	TYPICAL CONTROL STUCTURE
C2.1	PLAN AND PROFILE
C2.2	PLAN AND PROFILE
C2.3	PLAN AND PROFILE
C2.4	PLAN AND PROFILE
C5.1	ARCTIC PIPE DETAILS
C5.2	LAGOON DRAIN DETAILS WATER TREATMENT SITE
C5.3	EXPANSION BOX AND DETAILS
C5.4	ARCTIC PIPE HELICAL PIER SUPPORT DETAILS
C5.5	FENCING DETAILS
C5.6	EXPANSION BOX ASSEMBLY DETAILS

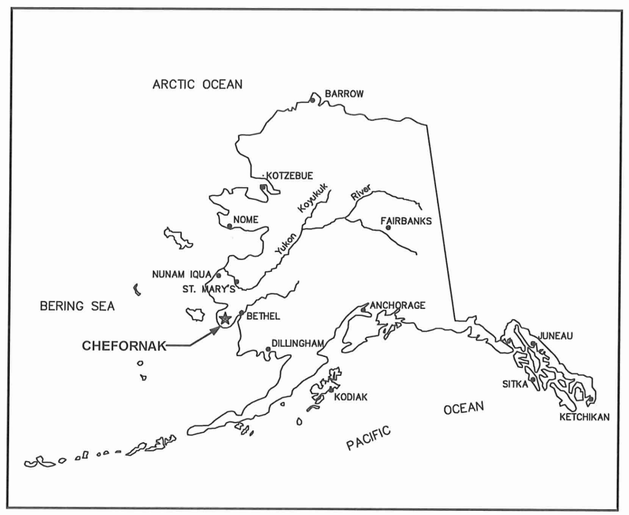

LOCATION MAP

CE2 ENGINEERS, INC.
PO BOX 232946 ANCHORAGE, AK 99523 PH: 907-349-1010 FAX: 907-349-1015

ANCHORAGE, ALASKA

STATE OF ALASKA 49TH Michael R. Erdman No.6252 REGISTERED PROFESSIONAL ENGINEER

CONSULTANT

RECORD DRAWING CERTIFICATE

THESE DRAWINGS REFLECT RECORDED INFORMATION OBTAINED DURING CONSTRUCTION.
INFORMATION PROVIDED HEREIN IS ACCURATE TO THE BEST OF MY KNOWLEDGE.

NAME DATE

Project Number (Consultant) _____

VSW Project Manager _____

Construction Foreman _____

Final Design (Date) _____

ADEC Approval (Date) _____

Construction Period (From) _____ (To) _____

As-Builts (Date) _____

PROJECT NARRATIVE

THE PROJECT WILL CONSIST OF A HELICAL PIER SUPPORTED FORCE MAIN EXTENDING THE SCHOOL FORCEMAIN FROM ITS CURRENT TERMINUS AT THE EXISTING TUNDRA POND TO THE NEW LAGOON . A NEW LIFT STATION, AT THE FUTURE WATER TREATMENT PLANT WASHETERIA, WILL BE DESIGNED FOR PUMPING THE COMMUNITY PRODUCED EFFLUENT FROM THE TOWNSITE TO THE LAGOON. AND A THREE CELL FACULTATIVE LAGOON SIZED FOR A 20 YEAR LIFE, ESTIMATING A DESIGN POPULATION OF 5800 PERSONS PRODUCING 10 GALLONS PER CAPITA PER DAY, PLUS 8000 GPCD FROM THE SCHOOL & WASHETERIA. SEASONAL DISCHARGE WILL BE TO SURROUNDING WETLANDS. DIKES WILL BE CONSTRUCTED USING ONSITE SILTS WITH A LOW PERMEABILITY RATE. THE LAGOON IS LOCATED APPROXIMATELY 2000 FEET SOUTHEAST OF THE TERMINUS OF THE SCHOOL FORCEMAIN.

G:\ACAD\CHEFORNAK\CYF1101 Sewage Lagoon\COVER.dwg, 10/7/2011 7:52:17 AM, Flash, \\CE2MAIN\LANIER MP C2050/LD520C PCL 6

GENERAL NOTES

A. GENERAL:

1. THE PROJECT SUPERINTENDENT SHALL MAINTAIN A CLEAN SET OF "AS BUILT" RECORD DRAWINGS SHOWING THE LOCATIONS AND SWING TIES TO ALL APPURTENANCES. ALL ELEVATIONS SHALL BE MARKED ASB (AS-BUILT) WITH THE CORRECT VALUE INSERTED. DRAWINGS SHALL BE KEPT CURRENT IN RED PENCIL ON A DAILY BASIS IN A NEAT, LEGIBLE FASHION. COPIES OF THE AS-BUILT DRAWINGS SHALL BE SUBMITTED TO THE CITY OF CHEFORNAK AND VSW UPON COMPLETION OF CONSTRUCTION.

2. THE BASIS OF BEARINGS FOR HORIZONTAL CONTROL IS SHOWN ON SHEET G2.1.

3. THE BASIS OF VERTICAL CONTROL IS SHOWN ON SHEET G2.1.

4. EXISTING UTILITIES ARE SHOWN IN APPROXIMATE LOCATIONS TO THE BEST KNOWLEDGE OF THE ENGINEER AT THE TIME OF DESIGN. RECORDS MAY NOT BE COMPLETELY ACCURATE. THE PROJECT SUPERINTENDENT SHALL VERIFY HORIZONTAL AND VERTICAL LOCATIONS OF UTILITIES WITHIN EACH CONSTRUCTION REACH PRIOR TO BEGINNING WORK.

5. THE TOP OF DIKE ELEVATION IS ESTIMATED TO BE 2.0 FEET ABOVE THE 100-YEAR FLOOD ELEVATION.

B. ARCTIC PIPE:

1. CARRIER PIPE:
THE FORCEMAIN SHALL BE 4" HDPE, SDR 11. GRAVITY MAINS SHALL BE 8" HDPE, SDR 17. ALL HDPE PIPING SHALL BE LISTED BY THE PPI WITH A DESIGNATION OF PE3408 AND A CELL CLASSIFICATION OF 345434C OR BETTER AS PER ASTM D3350.

2. INSULATION:
ARCTIC PIPE INSULATION SHALL BE CLOSED CELL (ASTM D2341 CELL CLASSIFICATION 550674970034) URETHANE FOAM WITH A MAXIMUM K FACTOR OF 0.155 BTU-IN/HR-SF-DEG F. THE INSULATION CORE DENSITY SHALL BE BETWEEN 3.0 AND 4.0 LBS/CF. VOIDS GREATER THAN 0.05 CUBIC INCHES BEYOND 24 INCHES OF EITHER END OF THE PIPE SECTION WILL BE CAUSE FOR REJECTION OF THE PIPE. SEE TECHNICAL SPECIFICATION FOR FURTHER REQUIREMENTS.

3. OUTER JACKET MATERIAL:
THE OUTER JACKET MATERIAL FOR ALL ARCTIC PIPE AND FITTINGS SHALL BE 16 GAUGE HELICAL CORRUGATED ALUMINUM PIPE WITH SEAMS THAT WILL WITHSTAND A HYDROSTATIC PRESSURE OF 5 FEET OF WATER WITH NO LEAKAGE.

4. HYDRONIC HEAT TRACE:
HYDRONIC HEAT TRACE (WHERE SPECIFIED) SHALL BE A MINIMUM OF 2" DIA. HDPE, SDR 11 AND LISTED BY THE PPI WITH A DESIGNATION OF PE3408 AND A CELL CLASSIFICATION OF 345434C OR BETTER AS PER ASTM D3350.

C. CLEARING AND GRUBBING:

1. THE CONSTRUCTION CREW SHALL REMOVE BRUSH, VEGETATIVE MAT, AND OTHER OBJECTIONABLE MATERIAL WITHIN THE LAGOON FOOTPRINT. ALL GRUBBED MATERIAL SHALL BE DISPOSED OF IN THE DESIGNATED SPOILS DEPOSITION ARE WITHIN THE PROJECT PROPERTY. THE GRUBBED ORGANIC TOPSOIL SHALL BE LATER USED TO COVER AND REVEGETATE THE DIKE SIDE SLOPES.

D. EARTHWORK:

1. SIDE WALLS OF EXCAVATIONS SHALL BE SLOPED OR SUFFICIENTLY BRACED IN CONFORMANCE WITH SECTION 05.160 OF THE STATE OF ALASKA DEPARTMENT OF LABOR STANDARDS AND THE LATEST FEDERAL OSHA EXCAVATION AND TRENCHING STANDARDS. IF IT IS NECESSARY TO LEAVE AN OPEN EXCAVATION UNATTENDED, THE OPEN EXCAVATION SHALL BE ADEQUATELY SIGNED AND BARRICADED TO WARN RESIDENTS OF THE HAZARD.

2. COMPACTION OF STRUCTURAL FOUNDATIONS, PIPE ZONE MATERIALS, EMBANKMENTS AND ROADWAYS SHALL BE ACCOMPLISHED USING A MINIMUM OF THREE (3) PASSES WITH A 15,000 POUND VIBRATORY DRUM COMPACTOR. EMBANKMENT FILL SHALL BE COMPACTED IN MAXIMUM 8"-INCH LIFTS PRIOR TO SUBSEQUENT PLACEMENT OF FILL . SUPERINTENDENT SHALL COORDINATE AN INITIAL EFFORT INSPECTION WITH THE ENGINEER AND VSW TO VERIFY THE ACTUAL COMPACTIVE EFFORT REQUIRED. IF LIGHTER EQUIPMENT IS SUBSTITUTED THE LIFT DEPTH AND NUMBER OF PASSES SHALL BE ADJUSTED TO OBTAIN THE SAME COMPACTIVE EFFORT.

3. WHERE EXCAVATIONS ENCOUNTER GROUNDWATER, DEWATERING SHALL BE IMPLEMENTED AND TEMPORARY SHORING MAY BE REQUIRED TO STABILIZE THE WALLS WHILE EXCESS WATER IS ALLOWED TO DRAIN OR PUMPED OUT OF THE EXCAVATION.

E. REVEGETATION SPECIFICATION:

1. THE ENTIRE AREA DISTURBED BY CONSTRUCTION SHALL BE REVEGETATED AS QUICKLY AS GOOD CONSTRUCTION PRACTICE ALLOWS. AREAS TO BE REVEGETATED SHALL FIRST BE COVERED WITH A MINIMUM 6-INCH LAYER OF FRIABLE, LOOSELY PLACED TOPSOIL, FREE OF DEBRIS. THE FOLLOWING SEED MIXTURE AND FERTILIZER APPLICATION RATES SHALL BE APPLIED:

SEED	NAME/TYPE	RATE	METHOD
RED FESCUE	ARCTIC RED	14 LBS/ACRE	BROADCAST
BERING HAIRGRASS	NORCOAST	16 LBS/ACRE	BROADCAST
RYE GRASS	ANNUAL	2 LBS/ACRE	BROADCAST
FERTILIZER	20-20-20	180 LBS/ACRE	BROADCAST

2. EROSION CONTROL FABRIC:
USE BIODEGRADABLE JUTE MESH WITH A LIFE OF 1-2 YEARS. INSTALL ON SLOPES AFTER SEEDING AND ANCHOR SECURELY WITH GROUND STAPLES.

F. PIPELINE TESTING:

1. GENERAL:
ALL TESTING SHALL BE IN CONFORMANCE WITH THE FOLLOWING REQUIREMENTS:
ALL TESTS SHALL BE WITNESSED BY A REPRESENTATIVE DESIGNATED BY THE COMMUNITY. UPON SUCCESSFUL COMPLETION OF A TEST THE RESULTS OF THE TEST SHALL BE DOCUMENTED ON A TEST FORM AND ACKNOWLEDGED BY SIGNATURE OF THE COMMUNITY'S REPRESENTATIVE WITNESSING THE TEST AND BY THE PROJECT SUPERINTENDENT. THE SUPERINTENDENT'S RED LINED AS-BUILT DRAWINGS SHALL ALSO NOTE THE TIME AND DATE OF THE TEST, AS WELL AS THE NAME OF THE COMMUNITY'S WITNESS, FOR EACH PIPE SEGMENT TESTED.

2. FORCEMAIN TESTING:
PERFORM HYDROSTATIC TESTING OF ALL FORCEMAIN PIPING. FILL THE LINES WITH POTABLE WATER AND REMOVE AIR POCKETS PRIOR TO STARTING THE TEST. PRESSURIZE TO 100 PSI AND LEAVE FOR A MINIMUM OF 1 HOUR. AFTER THIS INITIAL PERIOD, ADD WATER TO BRING THE PRESSURE UP TO 100 PSI AND BEGIN A ONE HOUR TEST. THERE SHALL BE NO LOSS IN PRESSURE DURING THE 1 HOUR TEST FOR THE PIPING TO BE ACCEPTED.

3. GRAVITY SEWER MAIN TESTING:
THE CONSTRUCTION CREW SHALL CLEAN AND FLUSH ALL SANITARY SEWER MAINS PRIOR TO VISUAL INSPECTION (LAMPING) AND PRESSURE TESTING. EACH REACH OF SEWER MAIN SHALL BE LAMPED, MANHOLE TO MANHOLE, WITH A HIGH INTENSITY LIGHT AND LARGE MIRROR. SEGMENTS NOT LAMPING TO 7/8 OF A FULL MOON SHALL BE REALIGNED AND/OR REGRADED AS NECESSARY TO MEET THE 7/8 MOON REQUIREMENT.
ALL SEGMENTS OF COMPLETED SEWER MAIN AND OUTFALL SHALL BE PRESSURE TESTED FROM MANHOLE TO MANHOLE OR TERMINUS TO TERMINUS WITH AIR AT THE END OF CONSTRUCTION (PRIOR TO CONNECTING SEWER SERVICE LINES). AIR SHALL BE SLOWLY SUPPLIED TO THE PLUGGED PIPE INSTALLATION UNTIL THE INTERNAL AIR PRESSURE REACHES 4.0 POUNDS PER SQUARE INCH (PSI) GREATER THAN THE AVERAGE BACK PRESSURE OF ANY GROUNDWATER THAT MAY SUBMERGE THE PIPE. AT LEAST TWO (2) MINUTES SHALL BE ALLOWED FOR TEMPERATURE STABILIZATION BEFORE PROCEEDING WITH THE TEST. AT THE END OF THE STABILIZATION PERIOD THE AIR PRESSURE SHALL BE ADJUSTED TO THE TEST PRESSURE AND THE 10 MINUTE TEST PERIOD SHALL BEGIN.
THE MAXIMUM ALLOWABLE PRESSURE DROP FOR ANY SEWER MAIN SEGMENT DURING THE 10 MINUTE TEST PERIOD SHALL BE 2.7 PSI.

4. GLYCOL HEAT TRACE TESTING - PERFORM HYDROSTATIC TESTING OF GLYCOL HEAT TRACE. HYDROSTATIC TESTS SHALL BE PERFORMED AFTER INSTALLATION. FILL THE LINE WITH WATER AND REMOVE AIR PRIOR TO STARTING THE TEST. PRESSURIZE TO 1.5 X OPERATING PRESSURE (80 PSI) = 120 PSI AND LEAVE FOR A MINIMUM OF 1-HOUR. AFTER THIS INITIAL PERIOD, ADD WATER TO BRING THE PRESSURE UP TO 120 PSI AND BEGIN A 4-HOUR TEST. FOR THE GLYCOL LOOP TO BE ACCEPTED THERE SHOULD BE NO LOSS IN PRESSURE. NO VISIBLE LEAKS SHOULD BE NOTED UPON A VISUAL INSPECTION OF EACH JOINT UNDER PRESSURE.

"DRAFT" NOT FOR CONSTRUCTION

RECORD DRAWING CERTIFICATE
THESE DRAWINGS REFLECT RECORDED INFORMATION OBTAINED DURING CONSTRUCTION. INFORMATION PROVIDED HEREIN IS ACCURATE TO THE BEST OF MY KNOWLEDGE.
NAME DATE

SCALE: AS SHOWN
BAR IS ONE INCH ON ORIGINAL DRAWING
0 1"
IF NOT ONE INCH ON THIS SHEET, ADJUST SCALES ACCORDINGLY

CONSTRUCTION RECORD
FIELD BOOK
STAKING
FOREMAN
AS-BUILT
INSPECTOR

STATE OF ALASKA 49TH
Michael R. Erdman No.8252
REGISTERED PROFESSIONAL ENGINEER

FACULTATIVE LAGOON
GENERAL NOTES, DESIGN CRITERIA AND LEGEND
CHEFORNAK, ALASKA

CE2 ENGINEERS, INC.
PO BOX 223946 ANCHORAGE, AK 99523 PH: 907-349-1010 FAX: 907-349-1015

REVISION	BY	DATE

Project No. ____
Date OCT. 2011
Designed MRE
Drawn LAW
Approved MRE

Sheet No. G1.0

G:\ACAD\CHEFORNAK\CYF1101 Sewage Lagoon\G1.0 GENERAL NOTES LEGEND.dwg, 9/28/2011 4:22:34 PM, cmerz, \\Ce2main\LANIER MP C2050/LD520C PCL 6

LEGEND

EXISTING (PLAN VIEW / PROFILE VIEW)	PROPOSED (PLAN VIEW / PROFILE VIEW)	DESCRIPTION
		GROUND SURFACE
		DRAINAGE/WATER FEATURE
FM	FM	SEWER FORCE MAIN, LIFT STATION, REDUCER, AND DOUBLE WYE CLEANOUT
SS	SS	SEWER SERVICE LINE
		CULVERT
E		BURIED ELECTRICAL LINE
FO		BURIED FUEL OIL LINE
T		BURIED TELEPHONE LINE
E		OVERHEAD ELECTRIC
		EASEMENT
		UTILITY POLE
		FENCE
		ROADS AND TRAVELED WAYS
24	24	CONTOUR LINE
		R.O.W. (RIGHT- OF- WAY)
		SHORELINE
		TREES AND/OR BRUSH
MAJOR / MINOR		STRUCTURE
		GROUND PROFILE
		DIRECTION OF DRAINAGE
		PROPERTY LINE
		SECTION LINE
		BLM BRASS CAPPED MONUMENT
	ELEV 32.0'	BENCH MARK
24.5		SPOT ELEVATION
	#1012	REBAR - ABILITY SURVEY POINT NO. YELLOW PLASTIC CAP (REBAR)
TRACT 3		TRACT NUMBER
LOT 8		LOT NUMBER
		HEAT TRACE POWER SUPPLY

"DRAFT- NOT FOR RELEASE"

WORK SUMMARY

CONSTRUCT A THREE-CELL, LINED WASTEWATER TREATMENT LAGOON AND ASSOCIATED HYDRAULIC CONTROL FEATURES.

INSTALL APPROXIMATELY 1950 LF OF FORCEMAIN FROM THE EXISTING SCHOOL TUNDRA POND TO THE PROPOSED FACULTATIVE LAGOON SITE.

INSTALL A HYDRONIC HEAT TRACE AND WASTE HEAT RECOVER SYSTEM TO PROVIDE FREEZE PROTECTION OF THE LAGOON FORCEMAIN AND HONEYBUCKET DUMPING STATION.

CONSTRUCTION SCHEDULE

THE LAGOON SITE SOILS ARE COMPOSED PRIMARILY OF ORGANIC AND INORGANIC SILT. A SUCCESSFUL PROJECT WILL REQUIRE CAREFUL PLANNING TO SEQUENCE THE WORK IN A MANNER THAT BEST UTILIZES LOCAL INOAQUNIC SILTS. THE ANTICIPATED CONSTRUCTION SEQUENCING/SCHEDULING IS AS FOLLOWS.

WINTER 2011 AFTER FOLLOW UP, BEGIN CONSTRUCTION OF LAGOON DIKES, BY " BURRITO WRAPPING" THE EDGES OF 18" LIFTS OF PARTIALLY FROZEN SILT. MINIMUM COMPATION WILL BE OBTAINED BY ONE OR TWO PASSES WITH THE DOZER.

2012 RESHAPE DIKES FOLLOWING SETTLEMENT. SHAPE SLOPES TO 2:1 BY ADDING ADDITIONAL SILT MATERIAL.

SYSTEM STARTUP

FORCEMAIN AND LAGOON STARTUP WILL OCCUR AFTER LIFT STATION AT WTP/WASHETERIA IS CONSTRUCTED

STORM WATER MANAGEMENT PLAN

CONSTRUCTION SHALL BE PLANNED AND EXECUTED TO EXPEDITIOUSLY COMPLETE THE PROJECT WHILE MAINTAINING THE CONSTRUCTION SITE IN A MANNER THAT REDUCES THE POTENTIAL FOR CONTAMINATED STORM RUNOFF. SPECIFIC STEPS ARE TO INCLUDE THE FOLLOWING:

- PRIOR TO CONSTRUCTION DEVELOP A STORMWATER POLLUTION PREVENTION PLAN (SWPPP), WHICH UTILIZES
  THE BEST MANAGEMENT PRACTICES (BMPS) AND IS IN COMPLIANCE WITH THE NATIONAL POLLUTANT DISCHARGE ELIMINATION SYSTEM (NPDES) AND THE ALASKA CONSTRUCTION GENERAL PERMIT NO. AKR10000. THIS PLAN MUST BE APPROVED BY THE STATE OF ALASKA ADEC.
- FILE A NOTICE OF INTENT (NOI) WITH THE EPA A MINIMUM OF 7-DAYS PRIOR TO THE START OF CONSTRUCTION.
- CONSTRUCTOR SHALL BE VIGILANT WITH IMPLEMENTATION OF THE PLAN.

SECTION AND DETAIL DESIGNATIONS

SECTION LETTER — B / C3.5 — SECTION — NTS — SHEET ON WHICH SECTION IS SHOWN

DETAIL NUMBER — 1 / C3.5 — DETAIL — NTS — SHEET ON WHICH DETAIL IS SHOWN

ABBREVIATIONS

A.P.	ANGLE POINT (HORIZONTAL)
CMP	CORRUGATED METAL PIPE
C.O.E.	CORPS OF ENGINEERS
CULV.	CULVERT
FF	FINISHED FLOOR ELEVATION
G.B.	GRADE BREAK (VERTICAL)
G.V.	GATE VALVE
HDPE	HIGH DENSITY POLYETHYLENE PIPE
INV.	INVERT
IPS	IRON PIPE SIZE (INDUSTRY STANDARD OUTSIDE PIPE DIAMETER)
LF	LINEAR FEET
MFR	MANUFACTURER
MH	MANHOLE
SDR	SIDE DIMENSION RATIO
SHT.	SHEET
SS	STAINLESS STEEL
STA.	STATION
TOJ	TOP OF PIPE JACKET
V.B.	VALVE BOX
WS	WATER SURFACE

RECORD DRAWING CERTIFICATE
THESE DRAWINGS REFLECT RECORDED INFORMATION OBTAINED DURING CONSTRUCTION. INFORMATION PROVIDED HEREIN IS ACCURATE TO THE BEST OF MY KNOWLEDGE.
NAME DATE

SCALE: AS SHOWN
BAR IS ONE INCH ON ORIGINAL DRAWING 0 1"
IF NOT ONE INCH ON THIS SHEET, ADJUST SCALES ACCORDINGLY

CONSTRUCTION RECORD
FIELD BOOK
STAKING
FOREMAN
AS-BUILT
INSPECTOR

STATE OF ALASKA 49TH Michael R. Erdman No.6252 REGISTERED PROFESSIONAL ENGINEER

FACULTATIVE LAGOON
GENERAL NOTES, DESIGN CRITERIA AND LEGEND
CHEFORNAK, ALASKA

CE2 ENGINEERS, INC.
PO BOX 223046 ANCHORAGE, AK 99523 PH: 907-349-1010 FAX: 907-349-1015

REVISION	BY	DATE

Project No. ____
Date JUNE 2011
Designed LAP
Drawn DDR
Approved LAP

Sheet No. G1.1

G:\ACAD\CHEFORNAK\CYF1101 Sewage Lagoon\G1.1PROJECT DESCRIPTION LEGEND.dwg, 8/2/2011 4:25:46 PM, cmerz, \\Ce2main\LANIER MP C2050/LD520C PCL 6

"DRAFT- NOT FOR RELEASE"

G:\ACAD\CHEFORNAK\CYF1101 Sewage Lagoon\G1.2 VICINITY MAP.dwg, 9/28/2011 4:49:32 PM, cmerz, \\Ce2main\LANIER MP C2050/LD520C PCL 6

RECORD DRAWING CERTIFICATE

THESE DRAWINGS REFLECT RECORDED INFORMATION OBTAINED DURING CONSTRUCTION. INFORMATION PROVIDED HEREIN IS ACCURATE TO THE BEST OF MY KNOWLEDGE.

NAME _____ DATE _____

SCALE: AS SHOWN

BAR IS ONE INCH ON ORIGINAL DRAWING

0 1"

IF NOT ONE INCH ON THIS SHEET, ADJUST SCALES ACCORDINGLY

CONSTRUCTION RECORD

FIELD BOOK	
STAKING	
FOREMAN	
AS-BUILT	
INSPECTOR	

STATE OF ALASKA 49TH REGISTERED PROFESSIONAL ENGINEER Michael R. Erdman No.62252

FACULTATIVE LAGOON

VICINITY MAP

CHEFORNAK, ALASKA

CE2 ENGINEERS, INC.
PO BOX 223248 ANCHORAGE, AK 99523 PH: 907-349-1010 FAX: 907-349-1015

REVISION	BY	DATE

Project No. _____
Date OCT. 2011
Designed MRE
Drawn CM
Approved MRE

Sheet No. G1.2

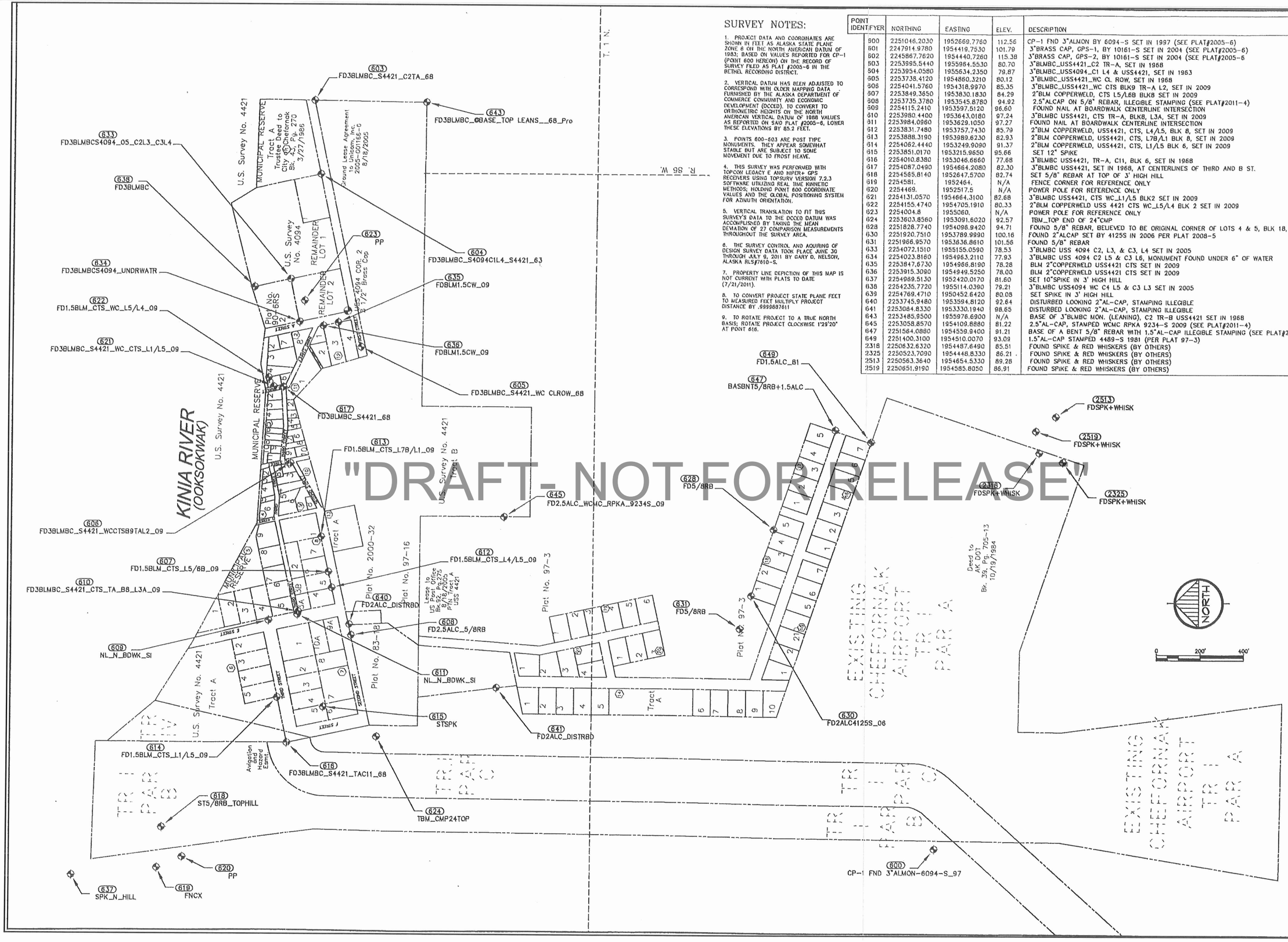

SURVEY NOTES:

1. PROJECT DATA AND COORDINATES ARE SHOWN IN FEET AS ALASKA STATE PLANE ZONE 8 ON THE NORTH AMERICAN DATUM OF 1983; BASED ON VALUES REPORTED FOR CP-1 (POINT 600 HEREON) ON THE RECORD OF SURVEY FILED AS PLAT #2005-6 IN THE BETHEL RECORDING DISTRICT.

2. VERTICAL DATUM HAS BEEN ADJUSTED TO CORRESPOND WITH OLDER MAPPING DATA FURNISHED BY THE ALASKA DEPARTMENT OF COMMERCE COMMUNITY AND ECONOMIC DEVELOPMENT (DCCED). TO CONVERT TO ORTHOMETRIC HEIGHTS ON THE NORTH AMERICAN VERTICAL DATUM OF 1988 VALUES AS REPORTED ON SAID PLAT #2005-6, LOWER THESE ELEVATIONS BY 85.2 FEET.

3. POINTS 600-603 ARE POST TYPE MONUMENTS. THEY APPEAR SOMEWHAT STABLE BUT ARE SUBJECT TO SOME MOVEMENT DUE TO FROST HEAVE.

4. THIS SURVEY WAS PERFORMED WITH TOPCON LEGACY E AND HIPER+ GPS RECEIVERS USING TOPSURV VERSION 7.2.3 SOFTWARE UTILIZING REAL TIME KINNETIC METHODS; HOLDING POINT 600 COORDINATE VALUES AND THE GLOBAL POSITIONING SYSTEM FOR AZIMUTH ORIENTATION.

5. VERTICAL TRANSLATION TO FIT THIS SURVEY'S DATA TO THE DCCED DATUM WAS ACCOMPLISHED BY TAKING THE MEAN DEVIATION OF 27 COMPARISON MEASUREMENTS THROUGHOUT THE SURVEY AREA.

6. THE SURVEY CONTROL AND ACQUIRING OF DESIGN SURVEY DATA TOOK PLACE JUNE 30 THROUGH JULY 9, 2011 BY GARY D. NELSON, ALASKA RLS#7610-S.

7. PROPERTY LINE DEFICTION OF THIS MAP IS NOT CURRENT WITH PLATS TO DATE (7/21/2011).

8. TO CONVERT PROJECT STATE PLANE FEET TO MEASURED FEET MULTIPLY PROJECT DISTANCE BY .9999887611

9. TO ROTATE PROJECT TO A TRUE NORTH BASIS; ROTATE PROJECT CLOCKWISE 1°29'20" AT POINT 616.

POINT IDENTIFYER	NORTHING	EASTING	ELEV.	DESCRIPTION
600	2251046.2030	1952669.7780	112.56	CP-1 FND 3"ALMON BY 6094-S SET IN 1997 (SEE PLAT#2005-6)
601	2247914.9780	1954419.7530	101.79	3"BRASS CAP, GPS-1, BY 10161-S SET IN 2004 (SEE PLAT#2005-6)
602	2245867.7620	1954440.7260	115.38	3"BRASS CAP, GPS-2, BY 10161-S SET IN 2004 (SEE PLAT#2005-6
603	2253995.5440	1955984.5530	80.70	3"BLMBC_USS4421_C2 TR-A, SET IN 1968
604	2253954.0580	1955634.2350	79.87	3"BLMBC_USS4094_C1 L4 & USS4421, SET IN 1963
605	2253738.4120	1954880.3210	80.12	3"BLMBC_USS4421_WC CL ROW, SET IN 1968
606	2254041.5760	1954318.9970	85.35	3"BLMBC_USS4421_WC CTS BLK9 TR-A L2, SET IN 2009
607	2253849.3650	1953830.1830	84.29	2"BLM COPPERWELD, CTS L5/L6B BLK8 SET IN 2009
608	2253735.3780	1953545.6780	94.82	2.5"ALCAP ON 5/8" REBAR, ILLEGIBLE STAMPING (SEE PLAT#2011-4)
609	2254115.2410	1953597.5120	96.60	FOUND NAIL AT BOARDWALK CENTERLINE INTERSECTION
610	2253980.4400	1953643.0180	97.24	3"BLMBC USS4421, CTS TR-A, BLK8, L3A, SET IN 2009
611	2253984.0960	1953629.1050	97.27	FOUND NAIL AT BOARDWALK CENTERLINE INTERSECTION
612	2253831.7480	1953757.7430	85.79	2"BLM COPPERWELD, USS4421, CTS, L4/L5, BLK 8, SET IN 2009
613	2253888.3190	1953989.6230	82.93	2"BLM COPPERWELD, USS4421, CTS, L7B/L1 BLK 8, SET IN 2009
614	2254062.4440	1953249.9090	91.37	2"BLM COPPERWELD, USS4421, CTS, L1/L5 BLK 6, SET IN 2009
615	2253851.0170	1953215.9650	95.66	SET 12" SPIKE
616	2254010.8380	1953046.6860	77.68	3"BLMBC USS4421, TR-A, C11, BLK 6, SET IN 1968
617	2254087.0490	1954664.2080	82.30	3"BLMBC USS4421, SET IN 1968, AT CENTERLINES OF THIRD AND B ST.
618	2254565.8140	1952647.5700	92.74	SET 5/8" REBAR AT TOP OF 3' HIGH HILL
619	2254581.	1952464.	N/A	FENCE CORNER FOR REFERENCE ONLY
620	2254469.	1952517.5	N/A	POWER POLE FOR REFERENCE ONLY
621	2254131.0570	1954664.3100	82.68	3"BLMBC USS4421, CTS WC_L1/L5 BLK2 SET IN 2009
622	2254155.4740	1954705.1910	80.33	2"BLM COPPERWELD USS 4421 CTS WC_L5/L4 BLK 2 SET IN 2009
623	2254004.8	1955060.	N/A	POWER POLE FOR REFERENCE ONLY
624	2253603.8560	1953091.6020	92.57	TBM_TOP END OF 24"CMP
628	2251828.7740	1954098.9420	94.71	FOUND 5/8" REBAR, BELIEVED TO BE ORIGINAL CORNER OF LOTS 4 & 5, BLK 18, PLAT 97-3
630	2251920.7510	1953789.9990	100.16	FOUND 2"ALCAP SET BY 4125S IN 2006 PER PLAT 2008-5
631	2251966.9570	1953836.8610	101.56	FOUND 5/8" REBAR
633	2254072.1510	1955155.0590	78.53	3"BLMBC USS 4094 C2, L3, & C3, L4 SET IN 2005
634	2254023.8160	1954963.2110	77.93	3"BLMBC USS 4094 C2 L5 & C3 L6, MONUMENT FOUND UNDER 6" OF WATER
635	2253847.6730	1954966.8190	78.28	BLM 2"COPPERWELD USS4421 CTS SET IN 2009
636	2253915.3090	1954949.5250	78.00	BLM 2"COPPERWELD USS4421 CTS SET IN 2009
637	2254969.5130	1952420.0170	81.60	SET 10"SPIKE IN 3' HIGH HILL
638	2254235.7720	1955114.0390	79.21	3"BLMBC USS4094 WC C4 L5 & C3 L3 SET IN 2005
639	2254769.4710	1950452.6420	80.08	SET SPIKE IN 3' HIGH HILL
640	2253745.9480	1953594.8120	92.64	DISTURBED LOOKING 2"AL-CAP, STAMPING ILLEGIBLE
641	2253084.8330	1953330.1940	98.65	DISTURBED LOOKING 2"AL-CAP, STAMPING ILLEGIBLE
643	2253485.9500	1955976.6900	N/A	BASE OF 3"BLMBC MON. (LEANING), C2 TR-B USS4421 SET IN 1968
645	2253058.8570	1954109.8880	81.22	2.5"AL-CAP, STAMPED WCMC RPKA 9234-S 2009 (SEE PLAT#2011-4)
647	2251564.0880	1954559.9400	91.21	BASE OF A BENT 5/8" REBAR WITH 1.5"AL-CAP ILLEGIBLE STAMPING (SEE PLAT#2011-4)
649	2251400.3100	1954510.0070	93.09	1.5"AL-CAP STAMPED 4489-S 1981 (PER PLAT 97-3)
2318	2250832.6320	1954487.6490	85.51	FOUND SPIKE & RED WHISKERS (BY OTHERS)
2325	2250523.7090	1954448.8330	86.21	FOUND SPIKE & RED WHISKERS (BY OTHERS)
2513	2250563.3640	1954654.5330	89.28	FOUND SPIKE & RED WHISKERS (BY OTHERS)
2519	2250651.9190	1954585.8050	86.91	FOUND SPIKE & RED WHISKERS (BY OTHERS)

RECORD DRAWING CERTIFICATE
THESE DRAWINGS REFLECT RECORDED INFORMATION OBTAINED DURING CONSTRUCTION. INFORMATION PROVIDED HEREIN IS ACCURATE TO THE BEST OF MY KNOWLEDGE.
NAME DATE

SCALE: AS SHOWN
BAR IS ONE INCH ON ORIGINAL DRAWING
0 1"
IF NOT ONE INCH ON THIS SHEET, ADJUST SCALES ACCORDINGLY

CONSTRUCTION RECORD
FIELD BOOK
STAKING
FOREMAN
AS-BUILT
INSPECTOR

STATE OF ALASKA 49TH GARY D. NELSON LS 7610 9-23-11

SURVEY CONTROL
CHEFORNAK, ALASKA

CE2 ENGINEERS, INC.
PO BOX 222046 ANCHORAGE, AK 99522 PH: 907-346-1010 FAX: 907-346-1015

REVISION	BY	DATE

Project No.
Date
Designed
Drawn CM
Approved GN

Sheet No.
G2.1

G:\ACAD\CHEFORNAK\CYF1101 Sewage Lagoon\G2.1 SURVEY CONTROL.dwg, 8/11/2011 1:55:40 PM, cmerz, \\Ce2main\LANIER MP C2050/LD520C PCL 6

RECORD OF BOREHOLE TP-1

SHEET 1 of 1

PROJECT: CE2 Chefornak Lagoon
PROJECT NUMBER: 113-95619
LOCATION: Chefornak, AK

CLIENT: CE2
DRILLING DATE: 4/1/2011
EQUIPMENT: Excavator- Hitachi EX 300

DATUM: WGS 84
ELEVATION: n/a
COORDS: 60.16167° N 164.29778° W

BORING METHOD: Bucket

DEPTH (ft)	DESCRIPTION	USCS	ELEV. / DEPTH (ft)	SAMPLE NUMBER	TYPE	REC ATT (inch)	UNCORRECTED BLOWS / FT	SALINITY (ppt) Δ / WATER CONTENT (PERCENT)
0	0.0 - 2.0 Frozen, light brown, fibrous PEAT, well bonded with approximately 40-50% visible ice by volume as individual ice crystals (PT, Vx)	PT		1	GS	6/6	1491	
	2.0 - 3.0 Frozen, brown, ORGANIC SILT, well bonded with approximately 5-10% visible ice by volume as coatings on particles (OL, Vc)	OL	2.0					
	3.0 - 8.0 Frozen, gray, SILT, well bonded with approximately 5-10% visible ice by volume, grading to poorly bonded with no visible ice, trace organic material (ML, Vc to Nf)	ML	3.0	2	GS	6/6	243	
				3	GS	6/6		
	8.0 - 12.0 Dark gray to gray, SILT, low plasticity, trace organic material (ML)	ML	8.0	4	GS	6/6	57	Gravel = 0%, Sand = 4%, P200 = 95.9%
	12.0 - 15.0 Frozen, dark gray, SILT, poorly bonded friable (ML, Nf)	ML	12.0	5	GS	6/6		
				6	GS	6/6		
15	Borehole completed at 15.0 ft.							

NOTES TESTS WATER LEVELS GRAPHIC: Backfilled with excavated materials

Notes:

1) Test pit backfilled with excavated materials
2) No groundwater observed

Golder Associates

DEPTH SCALE: 1 inch to 2.5 feet
DRILLING CONTRACTOR: CE2
DRILLER: Evan

LOGGED: J. Randazzo
CHECKED: D. Willman
CHECK DATE: 5/17/2011

Figure 4

RECORD OF BOREHOLE TP-2

SHEET 1 of 1

PROJECT: CE2 Chefornak Lagoon
PROJECT NUMBER: 113-95619
LOCATION: Chefornak, AK

CLIENT: CE2
DRILLING DATE: 4/1/2011
EQUIPMENT: Excavator- Hitachi EX 300

DATUM: WGS 84
ELEVATION: n/a
COORDS: 60.16253° N 164.29778° W

BORING METHOD: Bucket

DEPTH (ft)	DESCRIPTION	USCS	ELEV. / DEPTH (ft)	SAMPLE NUMBER	TYPE	REC ATT (inch)	UNCORRECTED BLOWS / FT	SALINITY (ppt) Δ / WATER CONTENT (PERCENT)
0	0.0 - 1.0 Frozen, light brown, fibrous PEAT, well bonded with approximately 40-50% visible ice by volume as individual ice crystals (PT, Vx)	PT						
	1.0 - 2.0 Frozen, brown, ORGANIC SILT, well bonded no excess ice (OL, Nbn)	OL	1.0	1	GS	6/6	1006	
	2.0 - 13.0 Frozen, gray, SILT, well bonded to 9.5 feet, approximately 10-15% visible ice by volume as coatings on particles, some organic material (ML, Vc to Nf)	ML	2.0	2	GS	6/6	322	
	Poorly bonded at 9.5 feet			3	GS	6/6	64	
13	Borehole completed at 13.0 ft.							

NOTES TESTS WATER LEVELS GRAPHIC: 1 inch PVC

Notes:

1) Test pit backfilled with excavated materials
2) Closed-end 1 inch schedule 80 PVC installed to 13 feet, with 2 feet of stickup above grade
3) No groundwater observed

Golder Associates

DEPTH SCALE: 1 inch to 2.5 feet
DRILLING CONTRACTOR: CE2
DRILLER: Evan

LOGGED: J. Randazzo
CHECKED: D. Willman
CHECK DATE: 5/17/2011

Figure 5

"DRAFT NOT FOR RELEASE"

RECORD DRAWING CERTIFICATE
THESE DRAWINGS REFLECT RECORDED INFORMATION OBTAINED DURING CONSTRUCTION. INFORMATION PROVIDED HEREIN IS ACCURATE TO THE BEST OF MY KNOWLEDGE.
NAME DATE

SCALE: BAR IS ONE INCH ON ORIGINAL DRAWING 0 1" IF NOT ONE INCH ON THIS SHEET, ADJUST SCALES ACCORDINGLY

CONSTRUCTION RECORD
FIELD BOOK
STAKING
FOREMAN
AS-BUILT
INSPECTOR

STATE OF ALASKA 49TH Michael R. Erdman No.8252 REGISTERED PROFESSIONAL ENGINEER

FACULTATIVE LAGOON
TEST HOLE BORING LOGS
CHEFORNAK, ALASKA

CE2 ENGINEERS, INC.
PO BOX 232946 ANCHORAGE, AK 99523 PH: 907-349-1010 FAX: 907-349-1015

REVISION	BY	DATE

Project No. ____
Date JUNE 2011
Designed MRE
Drawn CM
Approved MRE

Sheet No. G3.1

G:\ACAD\CHEFORNAK\CYF1101 Sewage Lagoon\G3.1 TO G3.2.dwg, 8/8/2011 4:30:22 PM, cmerz, LANIER MP C2050_LD520C PCL 6.pc3
CE2 CHEFORNAK LAGOON.GPJ LIBRARY-ANC(7-13-11).GLB [ANC BOREHOLE] DFreese 7/19/11

RECORD OF BOREHOLE TP-3

SHEET 1 of 1

PROJECT: CE2 Chefornak Lagoon
PROJECT NUMBER: 113-95619
LOCATION: Chefornak, AK

CLIENT: CE2
DRILLING DATE: 4/2/2011
EQUIPMENT: Excavator- Hitachi EX 300

DATUM: WGS 84
ELEVATION: n/a
COORDS: 60.16222° N 164.29689° W

DEPTH (ft)	BORING METHOD	SOIL PROFILE DESCRIPTION	ICE BOND	USCS	GRAPHIC LOG	ELEV. / DEPTH (ft)	SAMPLES NUMBER	TYPE	BLOWS PER FT	REC / ATT (inch)	UNCORRECTED BLOWS / FT (10 20 30 40)	SALINITY (ppt) △ / WATER CONTENT (PERCENT) W_P W W_L (10 20 30 40)	NOTES TESTS WATER LEVELS GRAPHIC
0	Bucket	0.0 - 1.0 Frozen, light brown, fibrous PEAT, well bonded with approximately 40-50% visible ice by volume as individual ice crystals (PT, Vx)		PT									
		1.0 - 3.0 Frozen, brown, ORGANIC SILT, well bonded with approximately 5-10% visible ice by volume as coatings on particles (OL, Vc)		OL		1.0	1	GS		6/6		64	
5		3.0 - 6.0 Dark gray, SILT, well bonded becoming friable below 5 feet, approximately 10% visible ice by volume (ML, Vc to Nbn)		ML		3.0	2	GS		6/6		64	
		6.0 - 8.0 Moist, dark gray, elastic SILT, medium plasticity (MH)		MH		6.0	3	GS		6/6	△	100	1 inch PVC
10		8.0 - 16.0 Gray, SILT, trace sand layers observed below 15 feet (ML)		ML		8.0	4	GS		6/6			Gravel = 0%, Sand = 6%, WD P200 = 93.7%
15							5	GS		6/6	△		
20		Borehole completed at 16.0 ft.											

Notes:

1) Test pit backfilled with excavated materials
2) Groundwater seepage observed at 10 feet during excavation
3) Closed-end 1 inch schedule 80 PVC installed to 15 feet, with 5 feet of stick up above grade

Golder Associates

DEPTH SCALE: 1 inch to 2.5 feet
DRILLING CONTRACTOR: CE2
DRILLER: Evan

LOGGED: J. Randazzo
CHECKED: D. Willman
CHECK DATE: 5/17/2011

Figure 6

RECORD OF BOREHOLE TP-4

SHEET 1 of 1

PROJECT: CE2 Chefornak Lagoon
PROJECT NUMBER: 113-95619
LOCATION: Chefornak, AK

CLIENT: CE2
DRILLING DATE: 4/2/2011
EQUIPMENT: Excavator- Hitachi EX 300

DATUM: WGS 84
ELEVATION: n/a
COORDS: 60.16314° N 164.29500° W

DEPTH (ft)	BORING METHOD	SOIL PROFILE DESCRIPTION	ICE BOND	USCS	GRAPHIC LOG	ELEV. / DEPTH (ft)	SAMPLES NUMBER	TYPE	BLOWS PER FT	REC / ATT (inch)	UNCORRECTED BLOWS / FT (10 20 30 40)	SALINITY (ppt) △ / WATER CONTENT (PERCENT) W_P W W_L (10 20 30 40)	NOTES TESTS WATER LEVELS GRAPHIC
0	Bucket	0.0 - 1.0 Frozen, brown, fibrous PEAT, well bonded no excess ice (PT, Nbn)		PT									
		1.0 - 2.0 Frozen, brown, ORGANIC SILT, well bonded no excess ice (OL, Nbn)		OL		1.0	1	GS		6/6		22	
		2.0 - 5.0 Frozen, gray, SILT, well bonded to 4 feet, poorly bonded 4-5 feet, no visible ice, trace organic material (ML, Nbn)		ML		2.0	2	GS		6/6	△	73	Backfilled with excavated materials
5		5.0 - 7.0 Moist, black, ORGANIC SILT, mixed with peat (OL)		OL		5.0	3	GS		6/6		74	
		7.0 - 9.0 Moist, gray, SILT (ML)		ML		7.0							
10		9.0 - 18.0 Gray, SILT, few fine sand grading to sandy SILT, sand is fine (ML)		ML		9.0	4	GS		6/6			Gravel = 0%, Sand = 10%, P200 = 89.7%, MA
15							5	GS		6/6	△		Gravel = 0%, Sand = 33%, P200 = 66.7%
20		Borehole completed at 18.0 ft.											

Notes:

1) Test pit backfilled with excavated materials
2) No groundwater observed

Golder Associates

DEPTH SCALE: 1 inch to 2.5 feet
DRILLING CONTRACTOR: CE2
DRILLER: Evan

LOGGED: J. Randazzo
CHECKED: D. Willman
CHECK DATE: 5/17/2011

Figure 7

"DRAFT- NOT FOR RELEASE"

RECORD DRAWING CERTIFICATE
THESE DRAWINGS REFLECT RECORDED INFORMATION OBTAINED DURING CONSTRUCTION. INFORMATION PROVIDED HEREIN IS ACCURATE TO THE BEST OF MY KNOWLEDGE.
NAME DATE

SCALE:
BAR IS ONE INCH ON ORIGINAL DRAWING
IF NOT ONE INCH ON THIS SHEET, ADJUST SCALES ACCORDINGLY

CONSTRUCTION RECORD
FIELD BOOK
STAKING
FOREMAN
AS-BUILT
INSPECTOR

STATE OF ALASKA 49TH REGISTERED PROFESSIONAL ENGINEER Michael R. Erdman No.8252

FACULTATIVE LAGOON
TEST HOLE BORING LOGS
CHEFORNAK, ALASKA

CE2 ENGINEERS, INC.
PO BOX 232048 ANCHORAGE, AK 99523 PH: 907-349-1019 FAX: 907-349-1015

REVISION	BY	DATE

Project No. JUNE 2011
Date
Designed MRE
Drawn CM
Approved MRE

Sheet No. G3.2

G:\ACAD\CHEFORNAK\CYF1101 Sewage Lagoon\G3.1 TO G3.2.dwg, 8/8/2011 4:31:15 PM, cmerz, LANIER MP C2050_LD520C PCL 6.pc3
CE2 CHEFORNAK LAGOON.GPJ LIBRARY-ANC(7-13-11).GLB [ANC BOREHOLE] DFreese 7/19/11

RECORD OF BOREHOLE TP-5

SHEET 1 of 1

PROJECT: CE2 Chefornak Lagoon
PROJECT NUMBER: 113-95619
LOCATION: Chefornak, AK

CLIENT: CE2
DRILLING DATE: 4/2/2011
EQUIPMENT: Excavator- Hitachi EX 300

DATUM: WGS 84
ELEVATION: n/a
COORDS: 60.16231° N 164.29428° W

DEPTH (ft)	BORING METHOD	SOIL PROFILE DESCRIPTION	ICE BOND	USCS	GRAPHIC LOG	ELEV. DEPTH (ft)	SAMPLES NUMBER	TYPE	BLOWS PER FT	REC ATT (inch)	UNCORRECTED BLOWS / FT (10 20 30 40)	SALINITY (ppt) Δ / WATER CONTENT (PERCENT) W_p ⊢ W ⊣ W_l (10 20 30 40)	NOTES TESTS WATER LEVELS GRAPHIC
0		0.0 - 1.0 Frozen, brown, fibrous PEAT, well bonded no excess ice (PT, Nbn)		PT									
		1.0 - 2.0 Frozen, brown, ORGANIC SILT, well bonded no excess ice (OL, Nbn)		OL		1.0	1	GS		6/6	Δ	114	
		2.0 - 9.0 Frozen, gray to dark gray, SILT, well bonded, approximately 5-10% visible ice by volume, trace organic material (ML, Vc to NI)		ML		2.0							
5		Poorly bonded at 7 feet					2	GS		6/6	Δ	71	Gravel = 0%, Sand = 10%, P200 = 90.0% 1 inch PVC
10	Bucket	9.0 - 18.0 Wet, gray to dark gray, sandy SILT, fine-grained sand, sand content increasing with depth (ML)		ML		9.0	3	GS		6/6			
15							4	GS		6/6			Gravel = 0%, Sand = 33%, P200 = 66.9%
20		Borehole completed at 18.0 ft.											

Notes:

1) Test pit backfilled with excavated materials
2) Closed-end 1 inch schedule 80 PVC installed to 18 feet, with 2 feet of stickup above grade
3) No groundwater observed

Golder Associates

DEPTH SCALE: 1 inch to 2.5 feet
DRILLING CONTRACTOR: CE2
DRILLER: Evan

LOGGED: J. Randazzo
CHECKED: D. Willman
CHECK DATE: 5/17/2011

Figure 8

RECORD OF BOREHOLE TP-6

SHEET 1 of 1

PROJECT: CE2 Chefornak Lagoon
PROJECT NUMBER: 113-95619
LOCATION: Chefornak, AK

CLIENT: CE2
DRILLING DATE: 4/2/2011
EQUIPMENT: Excavator- Hitachi EX 300

DATUM: WGS 84
ELEVATION: n/a
COORDS: 60.16136° N 164.29281° W

DEPTH (ft)	BORING METHOD	SOIL PROFILE DESCRIPTION	ICE BOND	USCS	GRAPHIC LOG	ELEV. DEPTH (ft)	SAMPLES NUMBER	TYPE	BLOWS PER FT	REC ATT (inch)	UNCORRECTED BLOWS / FT (10 20 30 40)	SALINITY (ppt) Δ / WATER CONTENT (PERCENT) W_p ⊢ W ⊣ W_l (10 20 30 40)	NOTES TESTS WATER LEVELS GRAPHIC
0		0.0 - 0.5 Frozen, black, fibrous PEAT, well bonded no excess ice (PT, Nbn)		PT									
		0.5 - 1.5 Frozen, black, ORGANIC SILT, well bonded no excess ice (OL, Nbn)		OL		0.5							Backfilled with excavated materials
		1.5 - 3.0 Wet, black, ORGANIC SILT (OL)		OL		1.5	1	GS		6/6	Δ	110	
		3.0 - 5.0 Wet, black, SILT, trace sand (ML)		ML		3.0	2	GS		6/6	Δ	188	3 ft WD
5	Bucket	Borehole completed at 5.0 ft.											
10													
15													
20													

Notes:

1) Test pit backfilled with excavated materials
2) Test pit excavated in potential drainage channel
3) Groundwater observed at 3 feet while excavating

Golder Associates

DEPTH SCALE: 1 inch to 2.5 feet
DRILLING CONTRACTOR: CE2
DRILLER: Evan

LOGGED: J. Randazzo
CHECKED: D. Willman
CHECK DATE: 5/17/2011

Figure 9

"DRAFT- NOT FOR RELEASE"

G:\ACAD\CHEFORNAK\CYF1101 Sewage Lagoon\G3.1 TO G3.2.dwg, 8/8/2011 4:32:04 PM, cmerz, LANIER MP C2050_LD520C PCL 6.pc3

CE2 CHEFORNAK LAGOON.GPJ LIBRARY-ANC(7-13-11).GLB [ANC BOREHOLE] DFreese 7/19/11

RECORD DRAWING CERTIFICATE
THESE DRAWINGS REFLECT RECORDED INFORMATION OBTAINED DURING CONSTRUCTION. INFORMATION PROVIDED HEREIN IS ACCURATE TO THE BEST OF MY KNOWLEDGE.
NAME DATE

SCALE:
BAR IS ONE INCH ON ORIGINAL DRAWING
IF NOT ONE INCH ON THIS SHEET, ADJUST SCALES ACCORDINGLY

CONSTRUCTION RECORD
FIELD BOOK
STAKING
FOREMAN
AS-BUILT
INSPECTOR

STATE OF ALASKA
Michael R. Erdman
No.6252
REGISTERED PROFESSIONAL ENGINEER

FACULTATIVE LAGOON
TEST HOLE BORING LOGS
CHEFORNAK, ALASKA

CE2 ENGINEERS, INC.
PO BOX 232049 ANCHORAGE, AK 99523 PH: 907-349-1010 FAX: 907-349-1015

REVISION	BY	DATE

Project No. ____
Date JUNE 2011
Designed MRE
Drawn CM
Approved MRE

Sheet No.
G3.3

RECORD OF BOREHOLE TP-7

SHEET 1 of 1

PROJECT: CE2 Chefornak Lagoon
PROJECT NUMBER: 113-95619
LOCATION: Chefornak, AK

CLIENT: CE2
DRILLING DATE: 4/2/2011
EQUIPMENT: Excavator- Hitachi EX 300

DATUM: WGS 84
ELEVATION: n/a
COORDS: 60.16069° N 164.29033° W

DEPTH (ft)	BORING METHOD	SOIL PROFILE DESCRIPTION	ICE BOND	USCS	GRAPHIC LOG	ELEV. DEPTH (ft)	SAMPLES NUMBER	TYPE	BLOWS PER FT	REC ATT (inch)	UNCORRECTED BLOWS / FT ■ (10 20 30 40)	SALINITY (ppt) △ WATER CONTENT (PERCENT) W_s ⊢ W ⊣ W_l (10 20 30 40)	NOTES TESTS WATER LEVELS GRAPHIC
0	Bucket	0.0 - 1.5 Frozen, brown, fibrous PEAT, well bonded no excess ice (PT, Nbn)		PT			1	GS		6/6		93 ○	
		1.5 - 10.0 Frozen, gray, SILT, well bonded, no visible ice, trace fibrous organic material (ML, Nbn to Nf)		ML		1.5	2	GS		6/6	△	80 ○	
5													1 inch PVC →
		Poorly bonded at 8 feet, trace sand					3	GS		6/6	△	85 ○	
10		Borehole completed at 10.0 ft.											
15													
20													

Notes:

1) Test pit backfilled with excavated materials
2) Closed-end 1 inch schedule 80 PVC installed to 10 feet, with 1.5 feet of stickup above grade
3) No groundwater observed

Golder Associates

DEPTH SCALE: 1 inch to 2.5 feet
DRILLING CONTRACTOR: CE2
DRILLER: Evan

LOGGED: J. Randazzo
CHECKED: D. Willman
CHECK DATE: 5/17/2011

Figure 10

RECORD OF BOREHOLE TP-8

SHEET 1 of 1

PROJECT: CE2 Chefornak Lagoon
PROJECT NUMBER: 113-95619
LOCATION: Chefornak, AK

CLIENT: CE2
DRILLING DATE: 4/3/2011
EQUIPMENT: Excavator- Hitachi EX 300

DATUM: WGS 84
ELEVATION: n/a
COORDS: 60.16025° N 164.28892° W

DEPTH (ft)	BORING METHOD	SOIL PROFILE DESCRIPTION	ICE BOND	USCS	GRAPHIC LOG	ELEV. DEPTH (ft)	SAMPLES NUMBER	TYPE	BLOWS PER FT	REC ATT (inch)	UNCORRECTED BLOWS / FT ■ (10 20 30 40)	SALINITY (ppt) △ WATER CONTENT (PERCENT) W_s ⊢ W ⊣ W_l (10 20 30 40)	NOTES TESTS WATER LEVELS GRAPHIC
0	Bucket	0.0 - 0.5 Frozen, brown, fibrous PEAT, well bonded no excess ice (PT, Nbn)		PT		0.5							
		0.5 - 1.5 Frozen, brown, ORGANIC SILT, well bonded with approximately 5% visible ice by volume as coatings on particles (OL, Vc)		OL		1.5	1	GS		6/6		187 ○	
		1.5 - 3.5 Frozen, gray, SILT, trace sand, well bonded with approximately 5-10% visible ice by volume as coatings on particles (ML, Vc)		ML			2	GS		6/6	△	65 ○	
		3.5 - 5.0 Frozen, dark gray, ORGANIC SILT to SILT with organics, interbedded fibrous peat, poorly bonded with no visible ice (OL to ML, Nf)		OL		3.5							
5		5.0 - 7.0 Moist, black, SILT, trace to few fine-grained sand, nonplastic (ML)		ML		5.0	3	GS		6/6		103 ○	
		7.0 - 15.5 Moist, gray, SILT, low plasticity, trace sand (ML)		ML		7.0	4	GS		6/6		○	Gravel = 0%, Sand = 11%, P200 = 88.6%, MA
10													1 inch PVC →
							5	GS		6/6	△	H ○	
15		Borehole completed at 15.5 ft.											
20													

Notes:

1) Test pit backfilled with excavated materials
2) Closed-end 1 inch schedule 80 PVC installed to 15.5 feet, with 4.5 feet of stickup above grade
3) No groundwater observed

Golder Associates

DEPTH SCALE: 1 inch to 2.5 feet
DRILLING CONTRACTOR: CE2
DRILLER: Evan

LOGGED: J. Randazzo
CHECKED: D. Willman
CHECK DATE: 5/17/2011

Figure 11

"DRAFT- NOT FOR RELEASE"

CE2 CHEFORNAK LAGOON.GPJ LIBRARY-ANC(7-13-11).GLB [ANC BOREHOLE] DFreese 7/19/11

G:\ACAD\CHEFORNAK\CYF1101 Sewage Lagoon\G3.1 TO G3.2.dwg, 8/8/2011 4:28:19 PM, cmerz, LANIER MP C2050_LD520C PCL 6.pc3

RECORD DRAWING CERTIFICATE
THESE DRAWINGS REFLECT RECORDED INFORMATION OBTAINED DURING CONSTRUCTION. INFORMATION PROVIDED HEREIN IS ACCURATE TO THE BEST OF MY KNOWLEDGE.
NAME
DATE

SCALE:
BAR IS ONE INCH ON ORIGINAL DRAWING
0 1"
IF NOT ONE INCH ON THIS SHEET, ADJUST SCALES ACCORDINGLY

CONSTRUCTION RECORD
FIELD BOOK
STAKING
FOREMAN
AS-BUILT
INSPECTOR

STATE OF ALASKA
49TH
Michael R. Esterman
No.9252
REGISTERED PROFESSIONAL ENGINEER

FACULTATIVE LAGOON
TEST HOLE BORING LOGS
CHEFORNAK, ALASKA

CE2 ENGINEERS, INC.
PO BOX 223246 ANCHORAGE, AK 99522 PH: 907-349-1010 FAX: 907-349-1015

REVISION	BY	DATE

Project No. ____
Date JUNE 2011
Designed MRE
Drawn CM
Approved MRE

Sheet No.
G3.4

Mid Oct - End May

WINTER STORAGE

Cell 1 shall be kept at "full" working depth (approx. 10') at all times. Cell 2 shall be emptied prior to freezing weather and allowed to fill during this period.

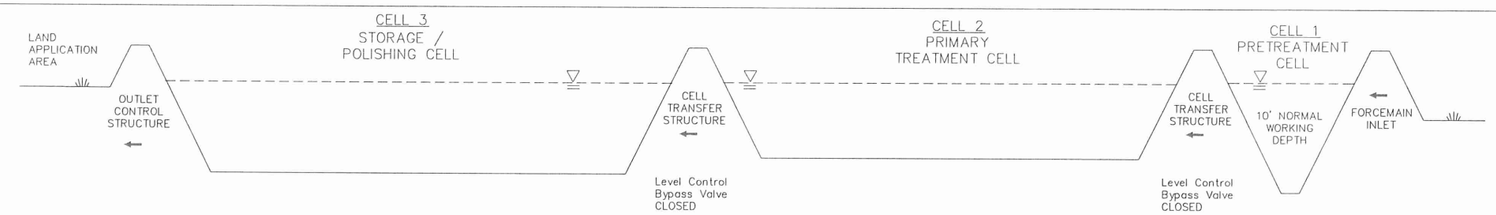

Late May - Early June

SPRING MAINTENANCE

Remove debris. Cut and remove brush within ten feet from perimeter fence and within enclosed area.

Inspect and repair fence, dikes, control structures, other facilities. Exercise valves. Ensure control structures, valves, and piping are ice-free.

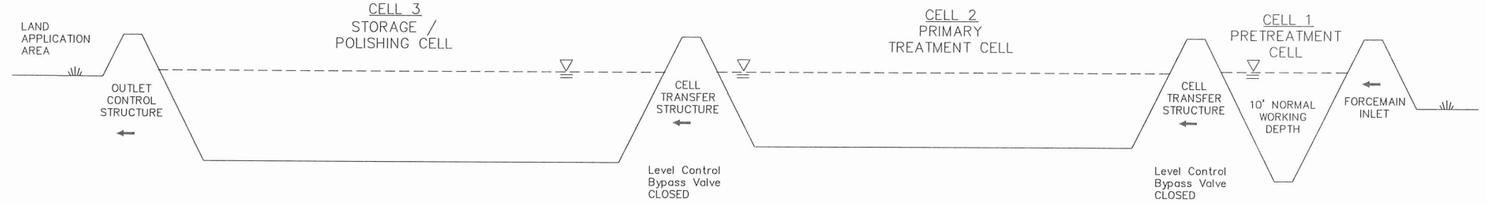

Early June

SPRING DISCHARGE

After Cell 2 has been ice free for a minimum of three weeks, begin discharging Cell 2 (through the Outlet Control Structure) to the Land Application Area. Adjust the outgoing valve to obtain approximately 250 GPM discharge flow rate. Close drain valves with 12-inches of water remaining.

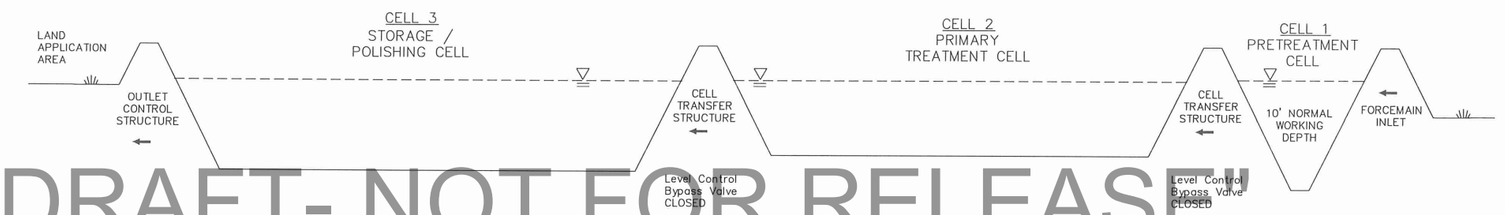

"DRAFT- NOT FOR RELEASE"

June - mid-Oct.

Cell 2 SUMMER Fill

Allow Cell 2 to fill.

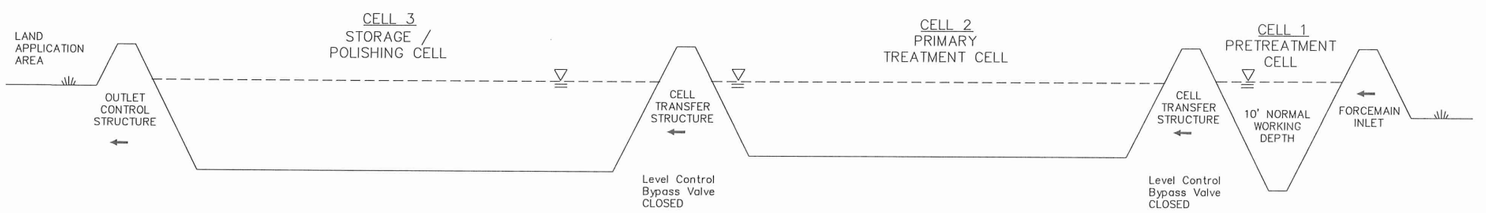

Mid October

END-OF-SUMMER DISCHARGE

Begin discharge of Cell 2 through the outlet control structure approximately two-weeks prior to the start of the "Freezing Season" during normal wet Fall weather. Adjust the outgoing valve to obtain approximately 350 GPM with 12-inches of water remaining.

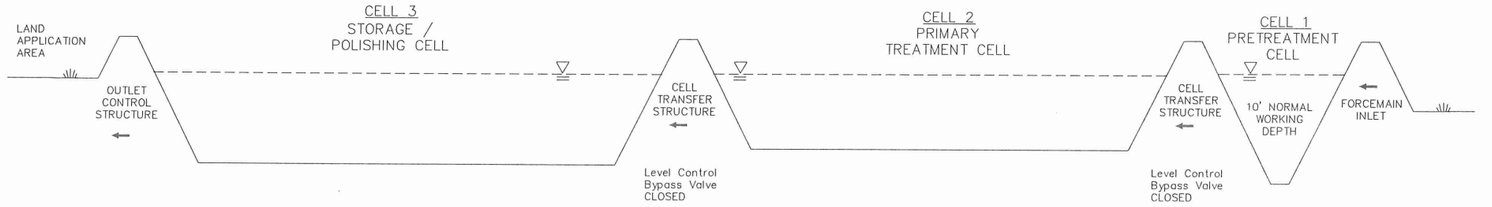

1 / G4.0 **WASTEWATER LAGOON OPERATING PLAN**
N.T.S.

RECORD DRAWING CERTIFICATE
THESE DRAWINGS REFLECT RECORDED INFORMATION OBTAINED DURING CONSTRUCTION. INFORMATION PROVIDED HEREIN IS ACCURATE TO THE BEST OF MY KNOWLEDGE.
NAME DATE

SCALE: AS SHOWN
BAR IS 1" ON ORIGINAL DRAWINGS
0 1"
IF NOT EQUAL TO 1" ADJUST SCALES ACCORDINGLY

CONSTRUCTION RECORD
FIELD BOOK
STAKING
FOREMAN
AS-BUILT
INSPECTOR

STATE OF ALASKA 49TH
Michael R. Eastman No. 6262
REGISTERED PROFESSIONAL ENGINEER

FACULTATIVE LAGOON
LAGOON OPERATING PLAN
CHEFORNAK, ALASKA

CE2 ENGINEERS, INC.
P.O. BOX 223245 ANCHORAGE, AK 99522 PH: 907-345-1010 FAX: 907-345-1015

REVISION	BY	DATE

Project No. ____ Date OCT. 2011
Designed MRE
Drawn CM
Approved MRE

Sheet No. G4.0

G:\ACAD\CHEFORNAK\CYF1101 Sewage Lagoon\G4.0 Operating Plan.dwg, 9/28/2011 3:46:39 PM, cmerz, HP LaserJet 5100 Series PCL6

NOTE: DIMENSIONS ARE TO CENTERLINE OF DIKE, AREAS ARE BASED ON WATER SURFACE AND VOLUMES EXCLUDE BOTTOM 2 FEET OF CELLS.

CHEFORNAK LAGOON DESIGN CRITERIA

ASSUMPTIONS			
	QTY.	UNIT	NOTES
2012 DESIGN POPULATION	431	PEOPLE	2010 US CENSUS POPULATION (418) + 2 YEARS @ 1.5%
2032 DESIGN POPULATION	580	PEOPLE	ASSUMED GROWTH RATE OF 1.5% PER YEAR
DESIGN FLOW RATE	10	GAL/CAP-DAY	
BOD	0.17	LBS/CAP-DAY	2009 ADEC DRAFT LAGOON CONSTRUCTION GUIDELINES
PRIMARY CELL BOD LOADING (MAXIMUM)	30	LBS/ACRE	
OVERALL BOD LOADING (MAXIMUM)	20	LBS/ACRE	2009 ADEC DRAFT LAGOON CONSTRUCTION GUIDELINES
PRETREATMENT CELL MIN. HYDRAULIC RETENTION TIME (HRT)	5	DAYS	
PRIMARY CELL MIN. HYDRAULIC RETENTION TIME (HRT)	40	DAYS	2009 ADEC DRAFT LAGOON CONSTRUCTION GUIDELINES
SECONDARY CELL MIN. HYDRAULIC RETENTION TIME (HRT)	240	DAYS	2009 ADEC DRAFT LAGOON CONSTRUCTION GUIDELINES
PRETREATMENT CELL MAXIMUM DEPTH	10	FEET	
PRETREATMENT CELL DESIGN DEPTH	10	FEET	
PRIMARY CELL MAXIMUM DEPTH	10	FEET	2009 ADEC DRAFT LAGOON CONSTRUCTION GUIDELINES
PRIMARY CELL DESIGN DEPTH	5	FEET	ACTUAL DEPTH 7 FEET (BOTTOM 2 FEET EXCLUDED FROM VOLUME CALC)
POLISHING / STORAGE CELL MAXIMUM DEPTH	10	FEET	2009 ADEC DRAFT LAGOON CONSTRUCTION GUIDELINES
POLISHING / STORAGE CELL DESIGN DEPTH	6.5	FEET	ACTUAL DEPTH 8.5 FEET (BOTTOM 2 FEET EXCLUDED FROM VOLUME CALC)
2032 DESIGN CONDITIONS			
AVERAGE DAILY FLOW	13,800	GALLONS	DESIGN FLOW X DESIGN POP. + 8,000 GPD (WASHETERIA/SCHOOL)
TOTAL BOD/DAY PRODUCTION	98.6	LBS	
DESIGN BOD/DAY PRODUCTION	49.3	LBS	ASSUMING 50% BOD REDUCTION IN PRETREATMENT CELL
MINIMUM OVERALL SIZE (BASED ON BOD LOADING)	2.5	ACRES	
MINIMUM PRETREATMENT CELL VOLUME (BASED ON HRT)	69,000	GALLONS	
MINIMUM PRIMARY CELL SIZE (BASED ON BOD LOADING)	1.6	ACRES	
MINIMUM SECONDARY CELL SIZE (BASED ON BOD LOADING)	0.8	ACRES	
REQUIRED PRIMARY CELL VOLUME (BASED ON HRT)	552,001	GALLONS	
REQUIRED SECONDARY CELL VOLUME (BASED ON HRT)	3,312,004	GALLONS	
MINIMUM PRIMARY CELL SIZE	**1.6**	**ACRES**	BOD LOADING CONTROLS
MINIMUM SECONDARY CELL SIZE	**3,312,004**	**GALLONS**	HYDRAULIC RETENTION TIME CONTROLS

RECORD DRAWING CERTIFICATE
THESE DRAWINGS REFLECT RECORDED INFORMATION OBTAINED DURING CONSTRUCTION. INFORMATION PROVIDED HEREIN IS ACCURATE TO THE BEST OF MY KNOWLEDGE.
NAME DATE

SCALE: AS SHOWN
BAR IS ONE INCH ON ORIGINAL DRAWING
0 1"
IF NOT ONE INCH ON THIS SHEET ADJUST SCALES ACCORDINGLY

CONSTRUCTION RECORD
FIELD BOOK
STAKING
FOREMAN
AS-BUILT
INSPECTOR

STATE OF ALASKA 49TH
Michael R. Eerman No.6262
REGISTERED PROFESSIONAL ENGINEER

FACULTATIVE LAGOON
KEY MAP
CHEFORNAK, ALASKA

CE2 ENGINEERS, INC.
PO BOX 223246 ANCHORAGE, AK 99523 PH: 907-349-1010 FAX: 907-349-1015

REVISION	BY	DATE

Project No. ____ Date OCT. 2011
Designed MRE
Drawn CM
Approved MRE

Sheet No. C1.0

G:\ACAD\CHEFORNAK\CYF1101 Sewage Lagoon\C1.0 KEY MAP.dwg, 9/28/2011 5:05:25 PM, cmerz, \\Ce2main\LANIER MP C2050/LD520C PCL 6

ESTIMATED VOLUMES	
CUT:	23,840 CU. YDS.*
FILL:	15,610 CU. YDS.
NET:	8,230 CU YDS. CUT

*CUT VOLUME EXCLUDES ORGANIC LAYER

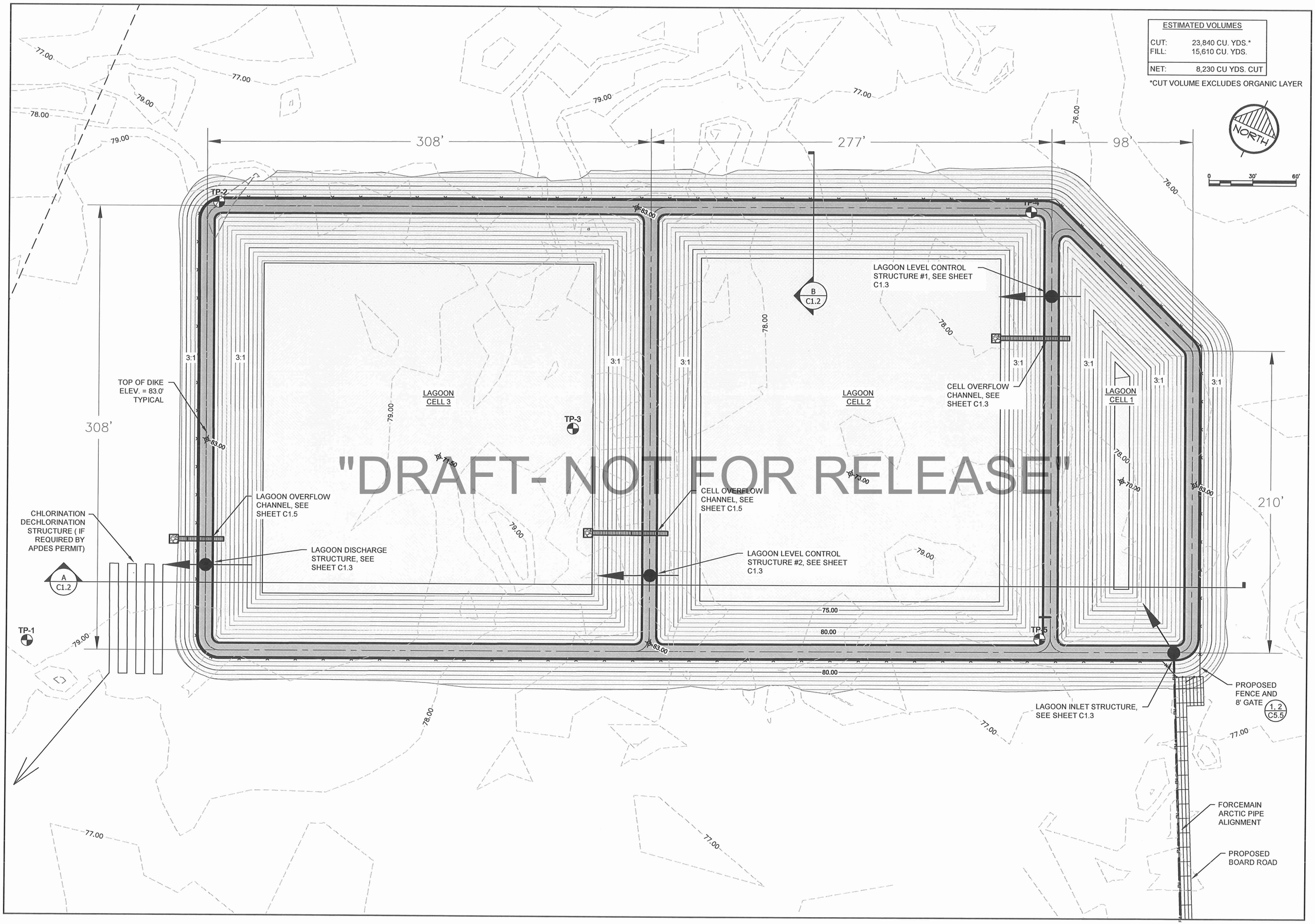

"DRAFT- NOT FOR RELEASE"

RECORD DRAWING CERTIFICATE

THESE DRAWINGS REFLECT RECORDED INFORMATION OBTAINED DURING CONSTRUCTION. INFORMATION PROVIDED HEREIN IS ACCURATE TO THE BEST OF MY KNOWLEDGE.

NAME DATE

SCALE: AS SHOWN

BAR IS ONE INCH ON ORIGINAL DRAWING 0 1"

IF NOT ONE INCH ON THIS SHEET, ADJUST SCALES ACCORDINGLY

CONSTRUCTION RECORD

FIELD BOOK

STAKING

FOREMAN

AS-BUILT

INSPECTOR

STATE OF ALASKA 49TH Michael R. Erdman No.8252 REGISTERED PROFESSIONAL ENGINEER

FACULTATIVE LAGOON

LAGOON SITE PLAN

CHEFORNAK, ALASKA

CE2 ENGINEERS, INC.

PO BOX 223248 ANCHORAGE, AK 99522 PH: 907-349-1010 FAX: 907-349-1015

REVISION	BY	DATE

Project No. ____ Date OCT. 2011 Designed MRE Drawn CM Approved MRE

Sheet No. C1.1

G:\ACAD\CHEFORNAK\CYF1101 Sewage Lagoon\C1.1 LAGOON SITE PLAN.dwg, 10/6/2011 8:31:37 AM, Flash, \\CE2MAIN\LANIER MP C2050/LD520C PCL 6

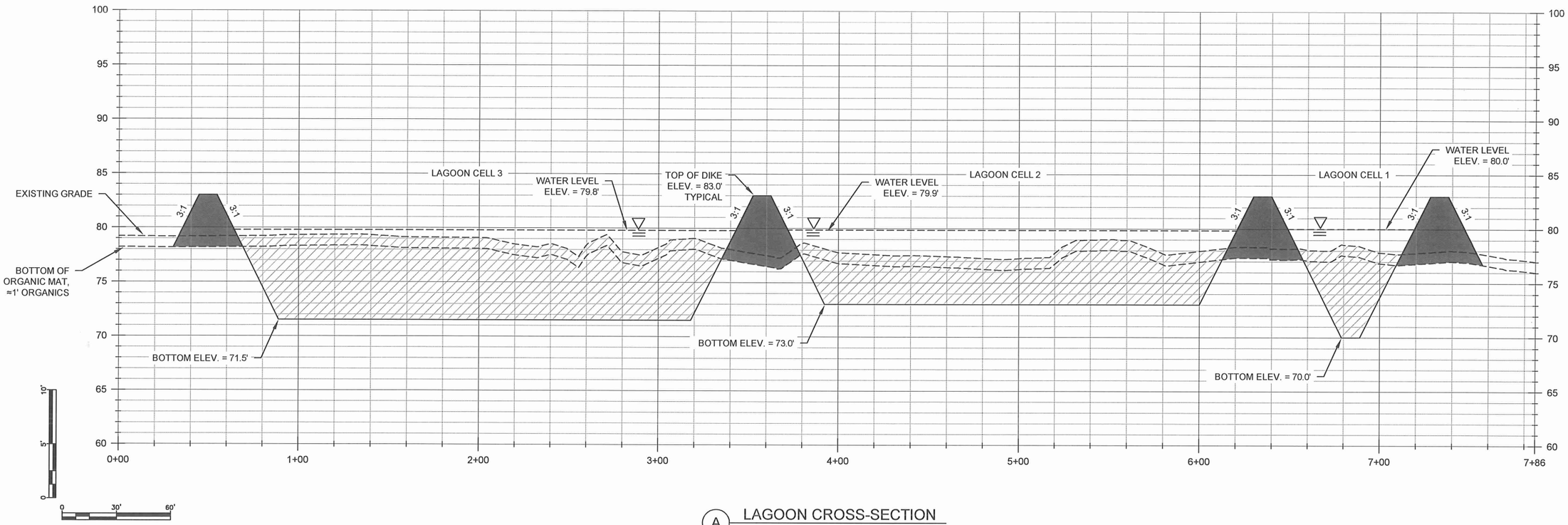

A LAGOON CROSS-SECTION

1:6 VERTICAL EXAGGERATION

"DRAFT- NOT FOR RELEASE"

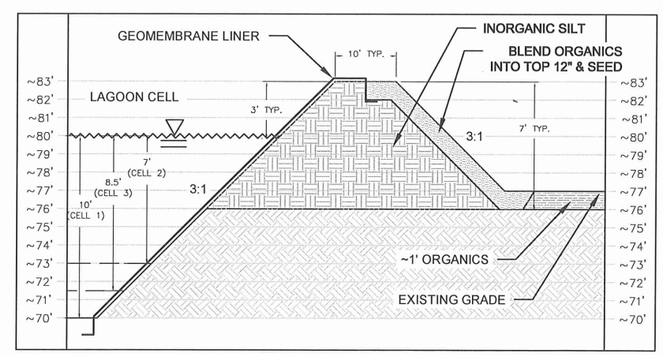

B TYPICAL DIKE CROSS-SECTION

3:1 VERTICAL SCALE

RECORD DRAWING CERTIFICATE

THESE DRAWINGS REFLECT RECORDED INFORMATION OBTAINED DURING CONSTRUCTION. INFORMATION PROVIDED HEREIN IS ACCURATE TO THE BEST OF MY KNOWLEDGE.

NAME DATE

SCALE: AS SHOWN

BAR IS ONE INCH ON ORIGINAL DRAWING 0 1"

IF NOT ONE INCH ON THIS SHEET, ADJUST SCALES ACCORDINGLY

CONSTRUCTION RECORD

FIELD BOOK

STAKING

FOREMAN

AS-BUILT

INSPECTOR

STATE OF ALASKA 49TH Michael R. Eotman No.9252 REGISTERED PROFESSIONAL ENGINEER

FACULTATIVE LAGOON

LAGOON CROSS SECTIONS

CHEFORNAK, ALASKA

CE2 ENGINEERS, INC.

PO BOX 222046 ANCHORAGE, AK 99522 PH: 907-349-5010 FAX: 907-349-1015

REVISION	BY	DATE

Project No. ____

Date OCT. 2011

Designed MRE

Drawn CM

Approved MRE

Sheet No. C1.2

G:\ACAD\CHEFORNAK\CYF1101 Sewage Lagoon\C1.2 LAGOON CROSS SECTIONS.dwg, 9/28/2011 5:27:20 PM, cmerz, \\Ce2main\LANIER MP C2050/LD520C PCL 6

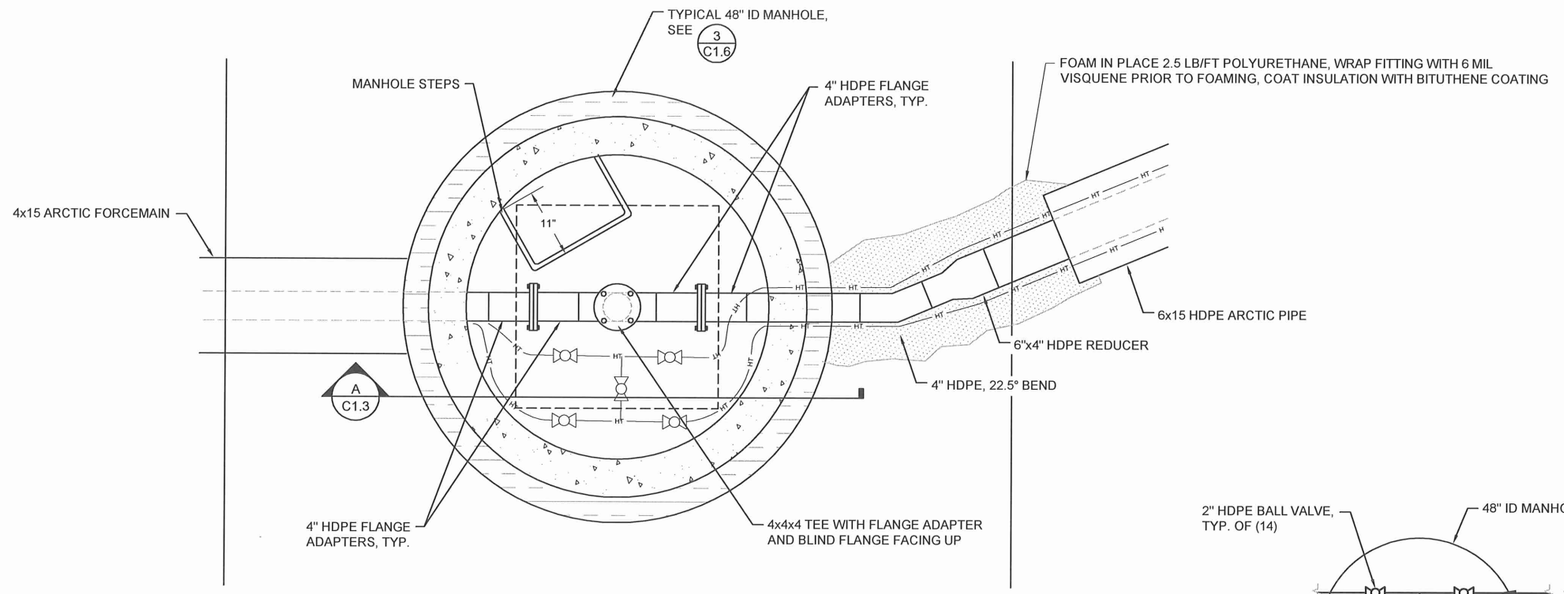

1 C1.3 LAGOON INLET STRUCTURE PLAN
1" = 1'-0"

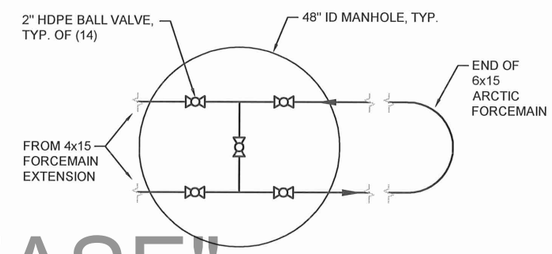

"DRAFT- NOT FOR RELEASE"

2 C1.3 GLYCOL HEAT TRACE SCHEMATIC
NTS

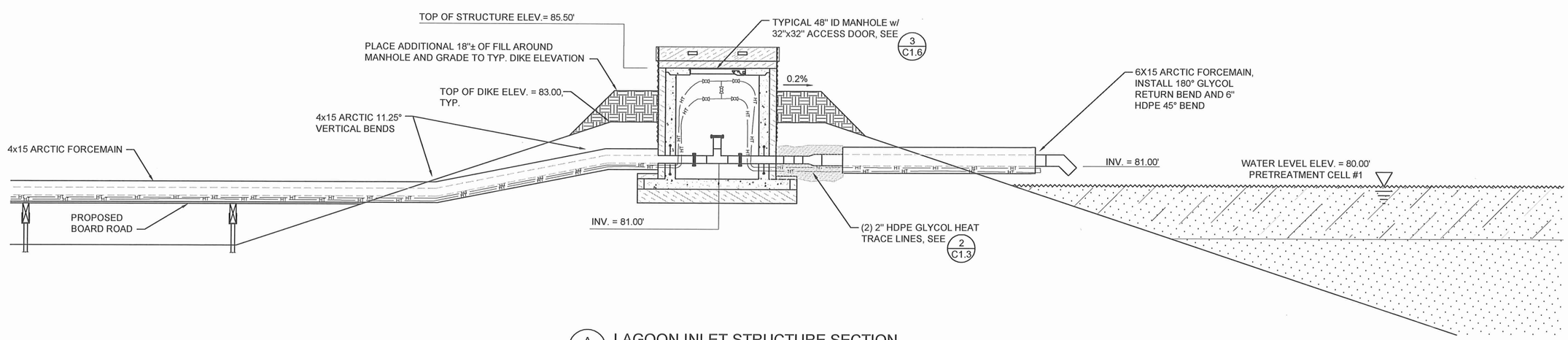

A C1.3 LAGOON INLET STRUCTURE SECTION
3/8" = 1'-0"

RECORD DRAWING CERTIFICATE
THESE DRAWINGS REFLECT RECORDED INFORMATION OBTAINED DURING CONSTRUCTION. INFORMATION PROVIDED HEREIN IS ACCURATE TO THE BEST OF MY KNOWLEDGE.
NAME DATE

SCALE: AS SHOWN
BAR IS ONE INCH ON ORIGINAL DRAWING
0 1"
IF NOT ONE INCH ON THIS SHEET, ADJUST SCALES ACCORDINGLY

CONSTRUCTION RECORD
FIELD BOOK
STAKING
FOREMAN
AS-BUILT
INSPECTOR

STATE OF ALASKA 49TH
Michael R. Eckman No.6252
REGISTERED PROFESSIONAL ENGINEER

FACULTATIVE LAGOON
LAGOON INLET STRUCTURE
CHEFORNAK, ALASKA

CE2 ENGINEERS, INC.
PO BOX 220266 ANCHORAGE, AK 99520 PH: 907-349-1010 FAX: 907-349-1015

REVISION	BY	DATE

Project No. ____
Date OCT. 2011
Designed MRE
Drawn CM
Approved MRE

Sheet No. C1.3

G:\ACAD\CHEFORNAK\CYF1101 Sewage Lagoon\C1.3 INTAKE STRUCTURE.dwg, 10/6/2011 8:32:58 AM, Flash, \\CE2MAIN\LANIER MP C2050/LD520C PCL 6

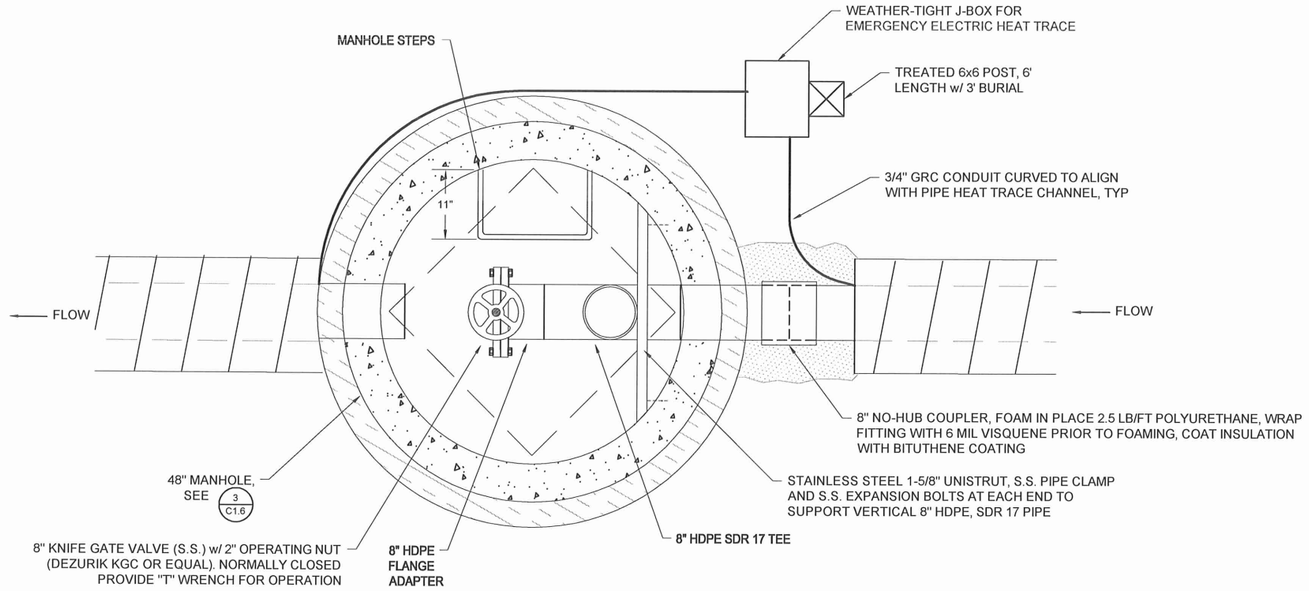

PLAN VIEW
1" = 1'-0"

"DRAFT- NOT FOR RELEASE"

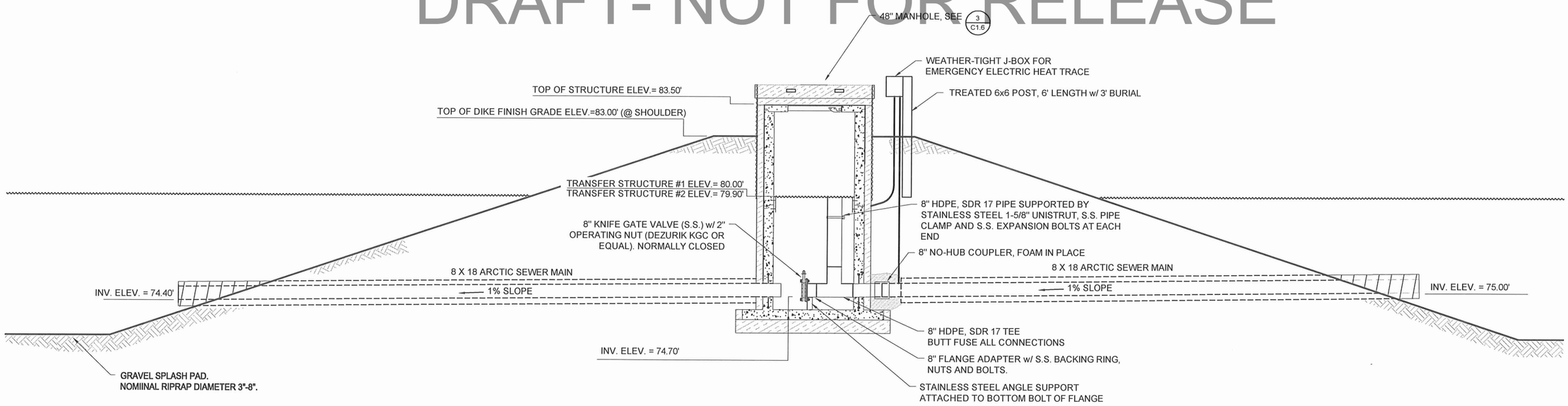

ELEVATION VIEW
3/8" = 1'-0"

1 / C1.4 CELL TRANSFER STRUCTURE

RECORD DRAWING CERTIFICATE
THESE DRAWINGS REFLECT RECORDED INFORMATION OBTAINED DURING CONSTRUCTION. INFORMATION PROVIDED HEREIN IS ACCURATE TO THE BEST OF MY KNOWLEDGE.
NAME DATE

SCALE: AS SHOWN
BAR IS ONE INCH ON ORIGINAL DRAWING
0 1"
IF NOT ONE INCH ON THIS SHEET, ADJUST SCALE ACCORDINGLY

CONSTRUCTION RECORD
FIELD BOOK
STAKING
FOREMAN
AS-BUILT
INSPECTOR

STATE OF ALASKA 49TH
Michael R. Erdman No.6252
REGISTERED PROFESSIONAL ENGINEER

FACULTATIVE LAGOON
CELL TRANSFER STRUCTURE
CHEFORNAK, ALASKA

CE2 ENGINEERS, INC.
PO BOX 223246 ANCHORAGE, AK 99523 PH: 907-349-1010 FAX: 907-349-1015

REVISION	BY	DATE

Project No. ____
Date OCT. 2011
Designed MRE
Drawn CM
Approved MRE

Sheet No. C1.4

G:\ACAD\CHEFORNAK\CYF1101 Sewage Lagoon\C1.4 Transfer Structure.dwg, 10/4/2011 12:12:11 PM, cmerz, \\Ce2main\LANIER MP C2050/LD520C PCL 6

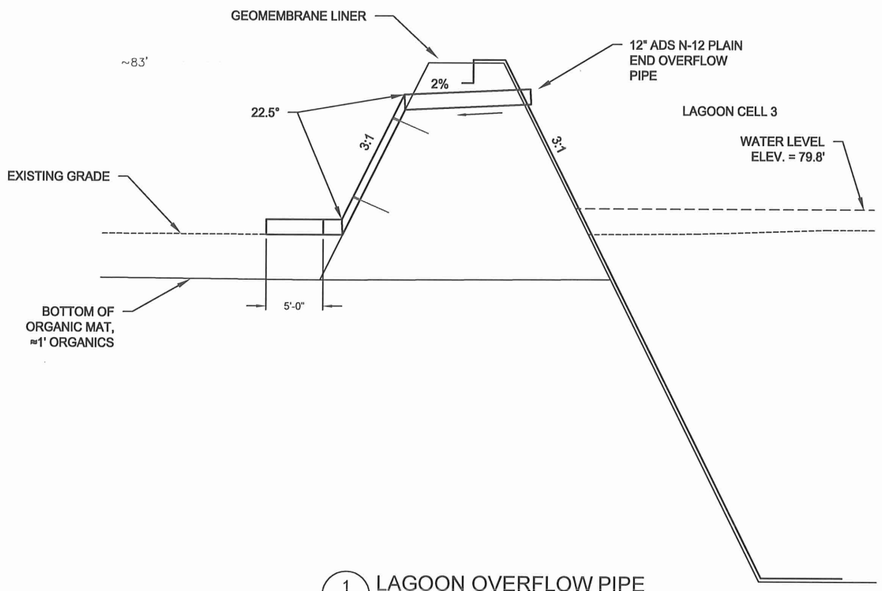

1 / C1.5 LAGOON OVERFLOW PIPE
NTS

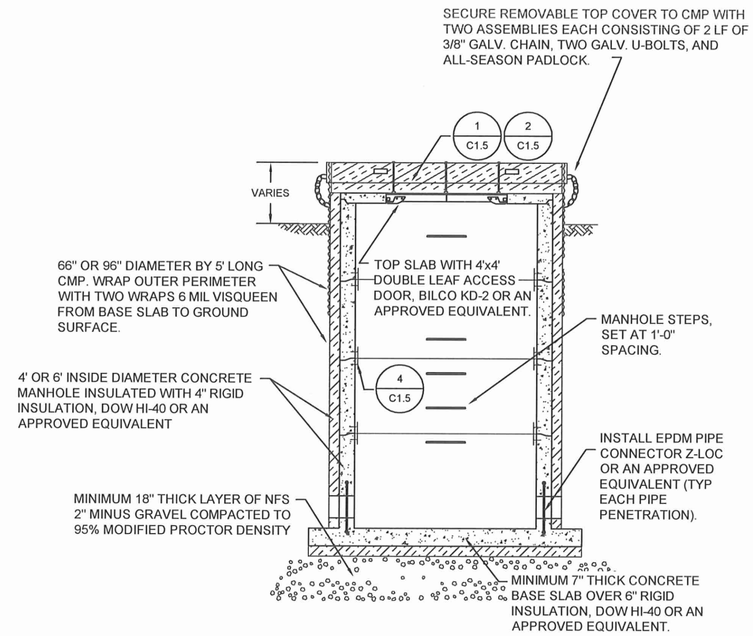

CONTROL STRUCTURE INSTALLATION NOTES

1. PRECAST MANHOLE SECTIONS SHALL BE REINFORCED CONCRETE CONFORMING TO ASTM C-478.

2. THE MANHOLE BASE SHALL BE INTEGRALLY CAST WITH THE BOTTOM BARREL SECTION. FIELD GROUT FILLETS, AS REQUIRED.

3. RAM-NEK SEALANT OR AN ENGINEER APPROVED RUBBER GASKET SUPPLIED BY THE MANHOLE MANUFACTURER SHALL BE INSTALLED TO PROVIDE A COMPLETE, CONTINUOUS SEAL AT ALL PRECAST JOINTS.

4. FERRULE LOOP INSERTS AND JOINT STRAPS SHALL BE PROVIDED AS SHOWN.

5. EPDM PIPE CONNECTORS (Z-LOCK OR EQUAL) SHALL BE INSTALLED AT ALL PIPE PENETRATIONS.

6. MANHOLE COVER SHALL MEET ALASKA DEPARTMENT OF HIGHWAYS STANDARD SPECIFICATIONS (IFCO 740 OR EQUAL.) MANHOLE STEPS SHALL BE CAST IN PLACE AND SHALL BE 1/2" GRADE 60 STEEL REINFORCEMENT DIPPED IN COPOLYMER POLYPROPYLENE PLASTIC.

7. ALL PREFABRICATED ARCTIC PIPE FITTINGS SHALL BE FACTORY ASSEMBLED IN ACCORDANCE WITH THE DRAWINGS AND DELIVERED TO THE JOB SITE READY TO INSTALL.

"DRAFT- NOT FOR RELEASE"

RECORD DRAWING CERTIFICATE
THESE DRAWINGS REFLECT RECORDED INFORMATION OBTAINED DURING CONSTRUCTION. INFORMATION PROVIDED HEREIN IS ACCURATE TO THE BEST OF MY KNOWLEDGE.
NAME DATE

SCALE: AS SHOWN
BAR IS ONE INCH ON ORIGINAL DRAWING 0 1"
IF NOT ONE INCH ON THIS SHEET, ADJUST SCALES ACCORDINGLY

CONSTRUCTION RECORD
FIELD BOOK
STAKING
FOREMAN
AS-BUILT
INSPECTOR

STATE OF ALASKA 49TH Michael R. Eckman No.6252 REGISTERED PROFESSIONAL ENGINEER

FACULTATIVE LAGOON
DISCHARGE STRUCTURE AND EMERGENCY OVERFLOW
CHEFORNAK, ALASKA

CE2 ENGINEERS, INC.
PO BOX 223246 ANCHORAGE, AK 99522 PH: 907-349-1010 FAX: 907-349-1015

REVISION	BY	DATE

Project No. ____
Date OCT. 2011
Designed MRE
Drawn CM
Approved MRE

Sheet No.
C1.5

G:\ACAD\CHEFORNAK\CYF1101 Sewage Lagoon\C1.5 Overflow.dwg, 10/6/2011 8:34:22 AM, Flash, \\CE2MAIN\LANIER MP C2050/LD520C PCL 6

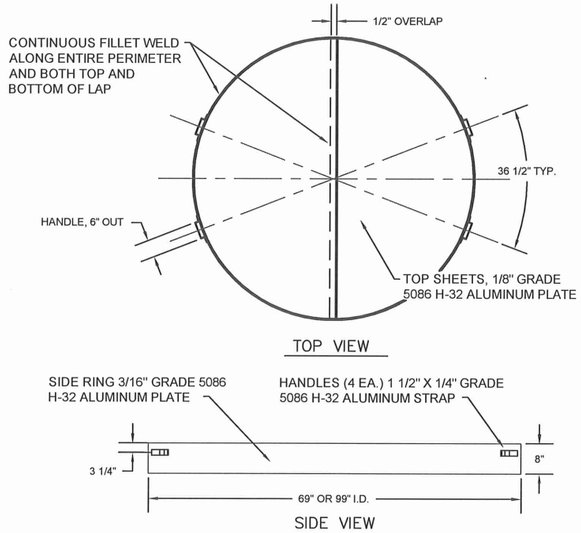

1 / C1.6 REMOVABLE TOP COVER
NTS

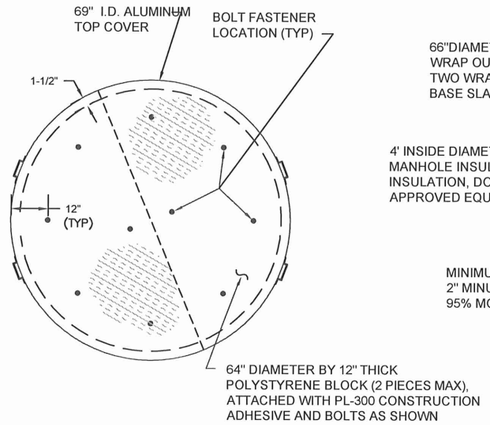

2 / C1.6 INSULATION FASTENERS
NTS

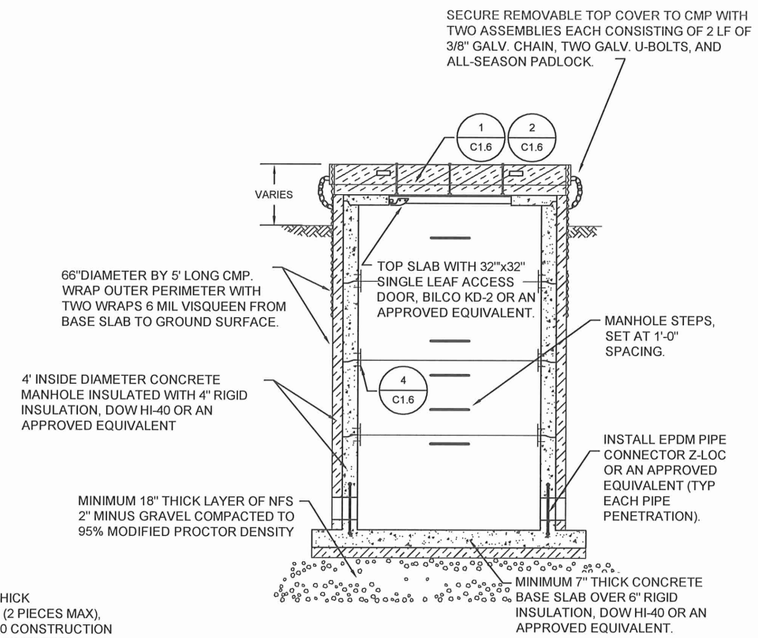

3 / C1.6 MANHOLE STRUCTURE
NTS

CONTROL STRUCTURE INSTALLATION NOTES

1. PRECAST MANHOLE SECTIONS SHALL BE REINFORCED CONCRETE CONFORMING TO ASTM C-478.

2. THE MANHOLE BASE SHALL BE INTEGRALLY CAST WITH THE BOTTOM BARREL SECTION. FIELD GROUT FILLETS, AS REQUIRED.

3. RAM-NEK SEALANT OR AN ENGINEER APPROVED RUBBER GASKET SUPPLIED BY THE MANHOLE MANUFACTURER SHALL BE INSTALLED TO PROVIDE A COMPLETE, CONTINUOUS SEAL AT ALL PRECAST JOINTS.

4. FERRULE LOOP INSERTS AND JOINT STRAPS SHALL BE PROVIDED AS SHOWN.

5. EPDM PIPE CONNECTORS (Z-LOCK OR EQUAL) SHALL BE INSTALLED AT ALL PIPE PENETRATIONS.

6. MANHOLE COVER SHALL MEET ALASKA DEPARTMENT OF HIGHWAYS STANDARD SPECIFICATIONS (IFCO 740 OR EQUAL.) MANHOLE STEPS SHALL BE CAST IN PLACE AND SHALL BE 1/2" GRADE 60 STEEL REINFORCEMENT DIPPED IN COPOLYMER POLYPROPYLENE PLASTIC.

7. ALL PREFABRICATED ARCTIC PIPE FITTINGS SHALL BE FACTORY ASSEMBLED IN ACCORDANCE WITH THE DRAWINGS AND DELIVERED TO THE JOB SITE READY TO INSTALL.

"DRAFT- NOT FOR RELEASE"

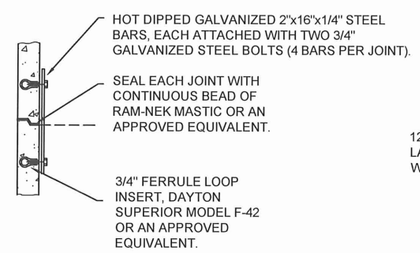

4 / C1.6 JOINT STRAPPING
NTS

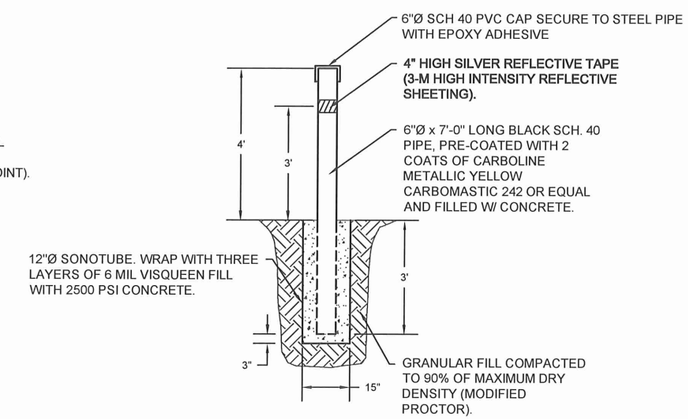

5 / C1.6 BOLLARD
NTS

RECORD DRAWING CERTIFICATE
THESE DRAWINGS REFLECT RECORDED INFORMATION OBTAINED DURING CONSTRUCTION. INFORMATION PROVIDED HEREIN IS ACCURATE TO THE BEST OF MY KNOWLEDGE.
NAME DATE

SCALE: AS SHOWN
BAR IS ONE INCH ON ORIGINAL DRAWING
0 1"
IF NOT ONE INCH ON THIS SHEET, ADJUST SCALES ACCORDINGLY

CONSTRUCTION RECORD
FIELD BOOK
STAKING
FOREMAN
AS-BUILT
INSPECTOR

STATE OF ALASKA 49TH LICENSED REGISTERED PROFESSIONAL ENGINEER Michael R. Eckman No.6252

FACULTATIVE LAGOON
TYPICAL CONTROL STRUCTURE DETAILS
CHEFORNAK, ALASKA

CE2 ENGINEERS, INC.
PO BOX 222046 ANCHORAGE, AK 99522 PH: 907-349-1010 FAX: 907-349-1015

REVISION	BY	DATE

Project No. ____
Date OCT. 2011
Designed MRE
Drawn CM
Approved MRE

Sheet No. C1.6

G:\ACAD\CHEFORNAK\CYF1101 Sewage Lagoon\C1.6 Typ Control Struc Dtls.dwg, 10/6/2011 8:37:42 AM, Flash, \\CE2MAIN\LANIER MP C2050/LD520C PCL 6

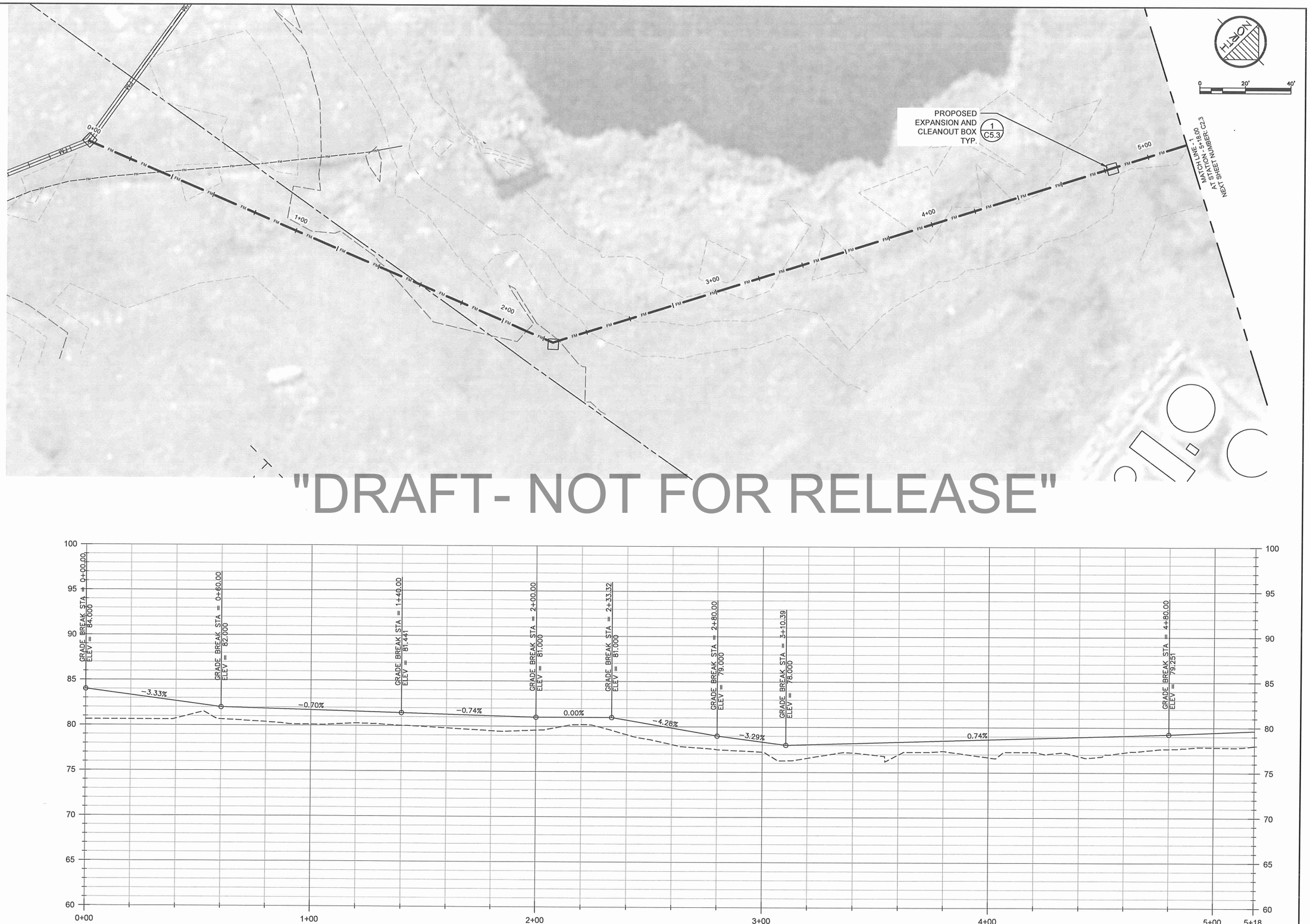

"DRAFT- NOT FOR RELEASE"

RECORD DRAWING CERTIFICATE

THESE DRAWINGS REFLECT RECORDED INFORMATION OBTAINED DURING CONSTRUCTION. INFORMATION PROVIDED HEREIN IS ACCURATE TO THE BEST OF MY KNOWLEDGE.

NAME

DATE

SCALE:

BAR IS ONE INCH ON ORIGINAL DRAWING

0 1"

IF NOT ONE INCH ON THIS SHEET, ADJUST SCALE ACCORDINGLY

CONSTRUCTION RECORD

FIELD BOOK

STAKING

FOREMAN

AS-BUILT

INSPECTOR

STATE OF ALASKA 49TH

Michael R. Erdman No.6252

REGISTERED PROFESSIONAL ENGINEER

FACULTATIVE LAGOON

PLAN AND PROFILE

CHEFORNAK, ALASKA

CE2 ENGINEERS, INC.

PO BOX 223946 ANCHORAGE, AK 99522 PH: 907-349-1010 FAX: 907-349-1015

REVISION	BY	DATE

Project No. ____

Date OCT. 2011

Designed ____

Drawn CM

Approved ____

Sheet No.

C2.1

G:\ACAD\CHEFORNAK\CYF1101 Sewage Lagoon\C2.1 Plan and Profiles.dwg, 10/7/2011 8:16:52 AM, Flash, \\CE2MAIN\LANIER MP C2050/LD520C PCL 6

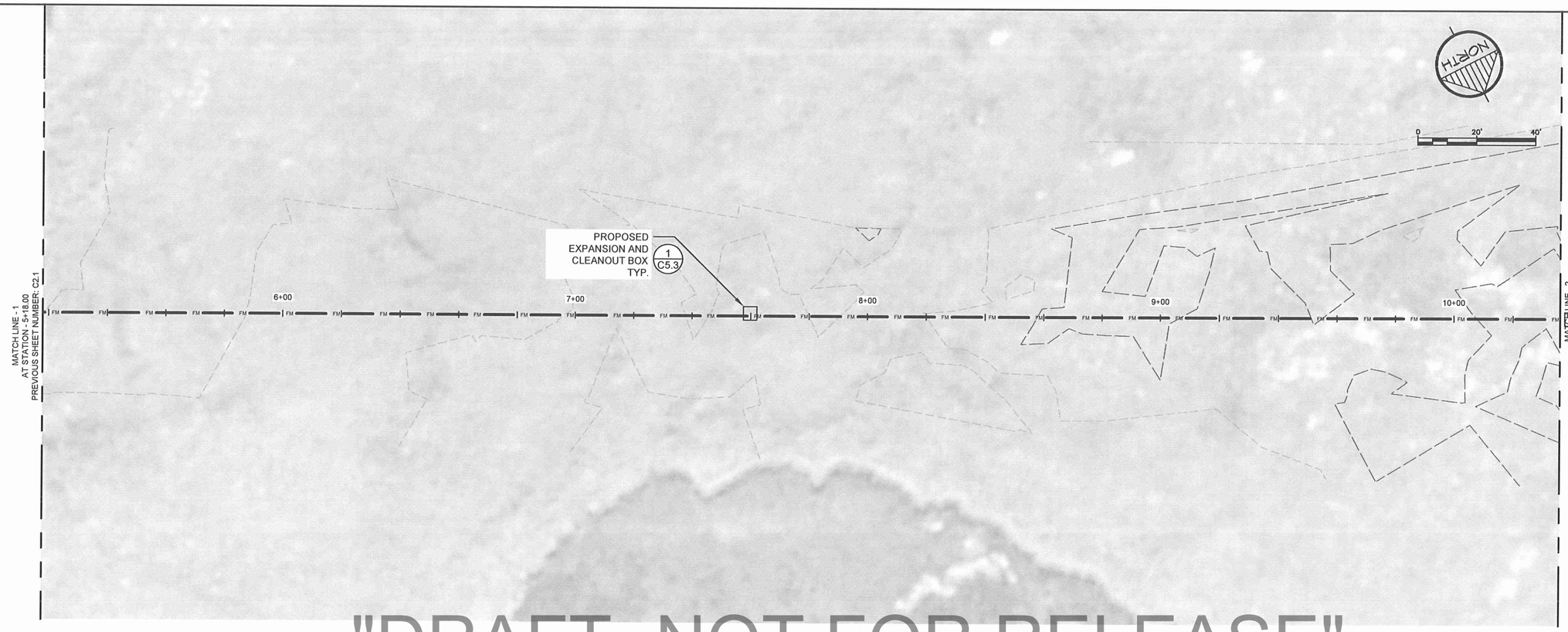

"DRAFT- NOT FOR RELEASE"

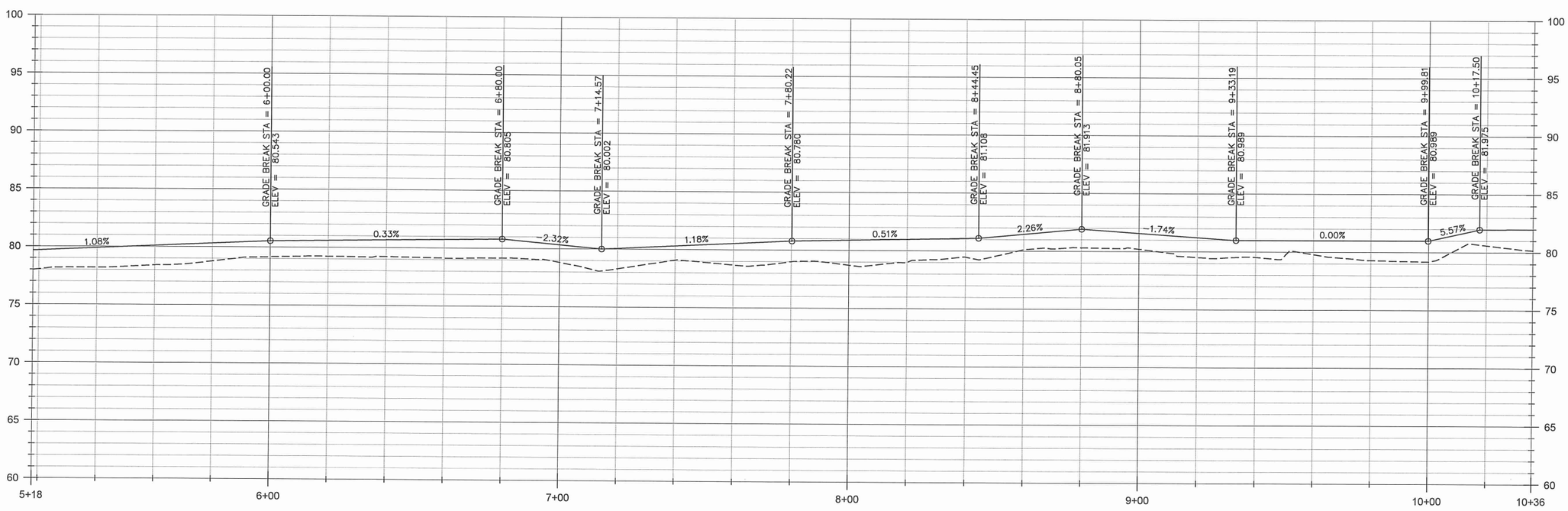

RECORD DRAWING CERTIFICATE

THESE DRAWINGS REFLECT RECORDED INFORMATION OBTAINED DURING CONSTRUCTION. INFORMATION PROVIDED HEREIN IS ACCURATE TO THE BEST OF MY KNOWLEDGE.

NAME DATE

SCALE:

BAR IS ONE INCH ON ORIGINAL DRAWING

0 1"

IF NOT ONE INCH ON THIS SHEET, ADJUST SCALES ACCORDINGLY

CONSTRUCTION RECORD

FIELD BOOK

STAKING

FOREMAN

AS-BUILT

INSPECTOR

STATE OF ALASKA 49TH
Michael R. Erdman
No.6252
REGISTERED PROFESSIONAL ENGINEER

FACULTATIVE LAGOON

PLAN AND PROFILE

CHEFORNAK, ALASKA

CE2 ENGINEERS, INC.

PO BOX 222968 ANCHORAGE, AK 99522 PH: 907-349-1010 FAX: 907-349-1015

REVISION	BY	DATE

Project No. ____
Date OCT. 2011
Designed ____
Drawn CM
Approved ____

Sheet No.
C2.2

G:\ACAD\CHEFORNAK\CYF1101 Sewage Lagoon\C2.1 Plan and Profiles.dwg, 10/7/2011 8:20:28 AM, Flash, \\CE2MAIN\LANIER MP C2050/LD520C PCL 6

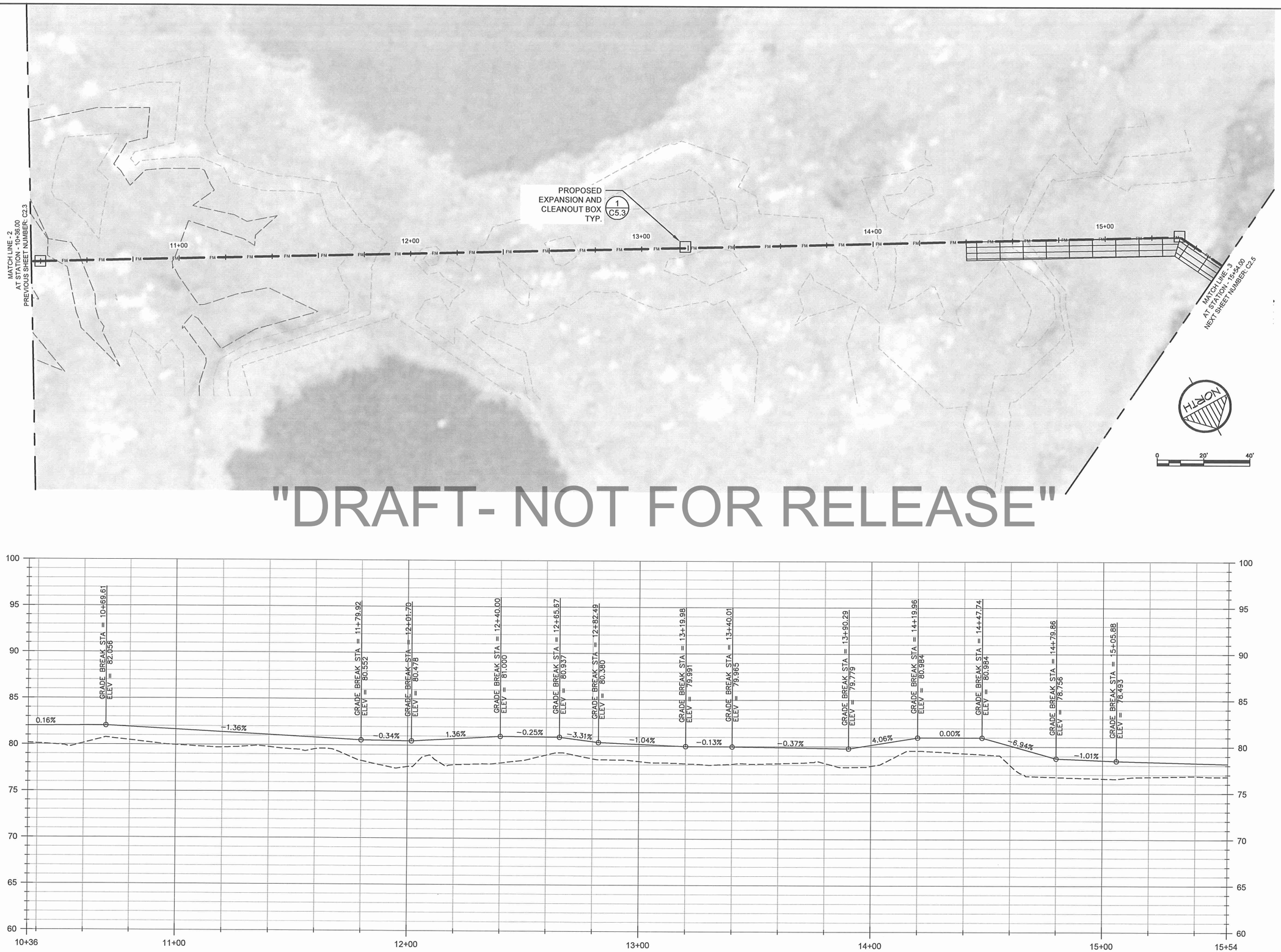

"DRAFT- NOT FOR RELEASE"

RECORD DRAWING CERTIFICATE

THESE DRAWINGS REFLECT RECORDED INFORMATION OBTAINED DURING CONSTRUCTION. INFORMATION PROVIDED HEREIN IS ACCURATE TO THE BEST OF MY KNOWLEDGE.

NAME DATE

SCALE:

BAR IS ONE INCH ON ORIGINAL DRAWING

0 1"

IF NOT ONE INCH ON THIS SHEET, ADJUST SCALES ACCORDINGLY

CONSTRUCTION RECORD

FIELD BOOK

STAKING

FOREMAN

AS-BUILT

INSPECTOR

STATE OF ALASKA 49TH

Michael R. Erdman No.6252 REGISTERED PROFESSIONAL ENGINEER

FACULTATIVE LAGOON

PLAN AND PROFILE

CHEFORNAK, ALASKA

CE2 ENGINEERS, INC.
PO BOX 223946 ANCHORAGE, AK 99522 PH: 907-349-1010 FAX: 907-349-1015

REVISION	BY	DATE

Project No. ____
Date OCT. 2011
Designed ____
Drawn CM
Approved ____

Sheet No.
C2.3

G:\ACAD\CHEFORNAK\CYF1101 Sewage Lagoon\C2.1 Plan and Profiles.dwg, 10/7/2011 8:24:26 AM, Flash, \\CE2MAIN\LANIER MP C2050/LD520C PCL 6

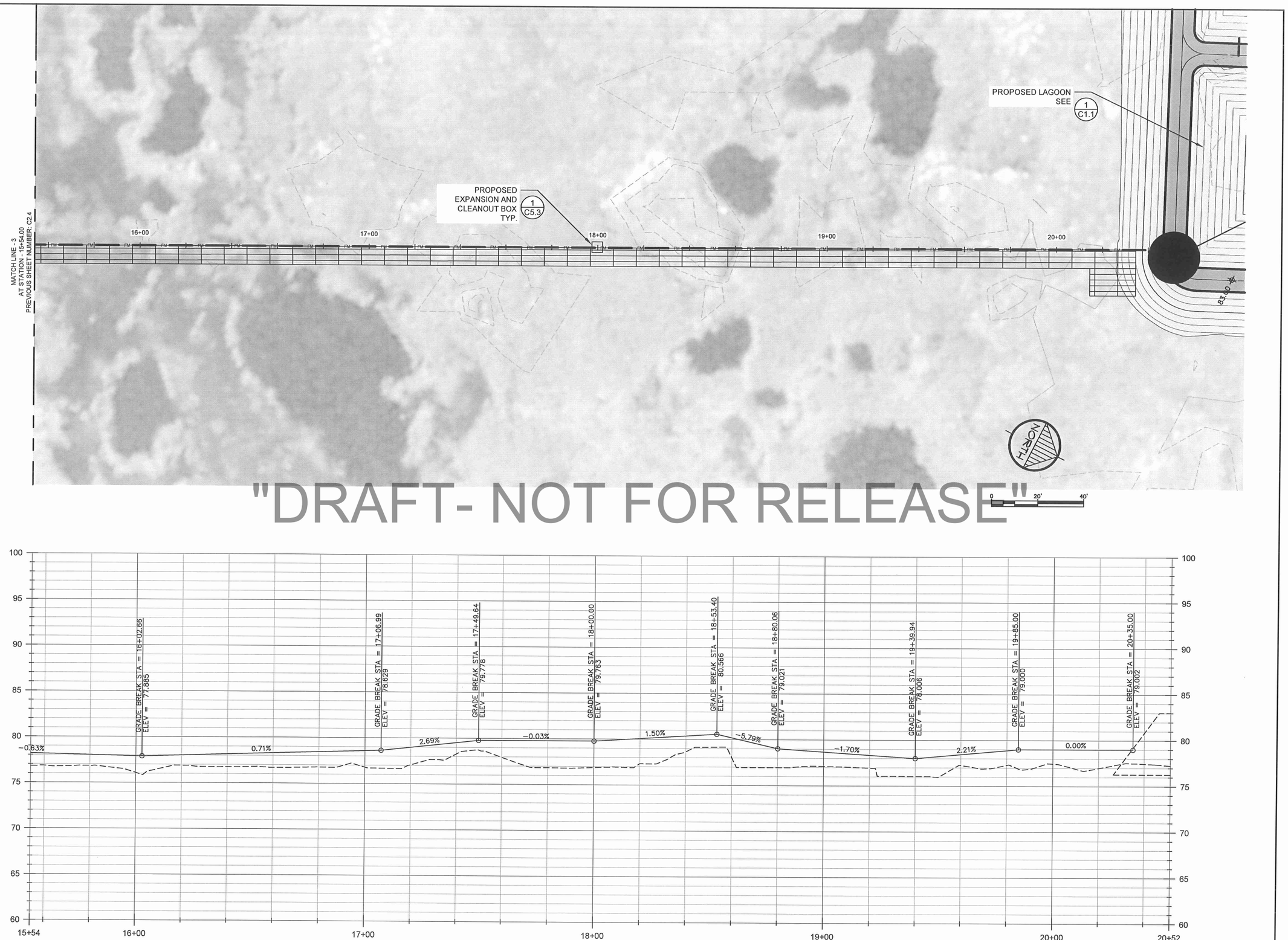

"DRAFT- NOT FOR RELEASE"

RECORD DRAWING CERTIFICATE

THESE DRAWINGS REFLECT RECORDED INFORMATION OBTAINED DURING CONSTRUCTION. INFORMATION PROVIDED HEREIN IS ACCURATE TO THE BEST OF MY KNOWLEDGE.

NAME DATE

SCALE:

BAR IS ONE INCH ON ORIGINAL DRAWING

0 1"

IF NOT ONE INCH ON THIS SHEET, ADJUST SCALES ACCORDINGLY

CONSTRUCTION RECORD

FIELD BOOK

STAKING

FOREMAN

AS-BUILT

INSPECTOR

STATE OF ALASKA 49TH Michael R. Eardman No.6252 REGISTERED PROFESSIONAL ENGINEER

FACULTATIVE LAGOON

PLAN AND PROFILE

CHEFORNAK, ALASKA

CE2 ENGINEERS, INC.
PO BOX 222948 ANCHORAGE, AK 99522 PH: 907-349-1010 FAX: 907-349-1015

REVISION	BY	DATE

Project No. ____ Date OCT. 2011

Designed ____

Drawn CM

Approved ____

Sheet No. C2.4

G:\ACAD\CHEFORNAK\CYF1101 Sewage Lagoon\C2.1 Plan and Profiles.dwg, 10/7/2011 8:11:44 AM, Flash, \\CE2MAIN\LANIER MP C2050/LD520C PCL 6

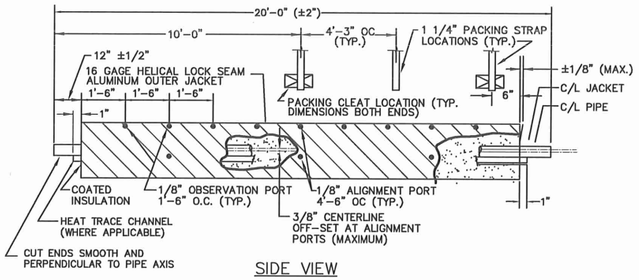

SIDE VIEW

NOTES:

1. D=INSERTION DEPTH OF BELL END GASKETED COUPLING +1 7/8"

INNER CORE PIPE/OUTER JACKET SCHEDULE		
NOMINAL CORE PIPE DIA.	INNER CORE PIPE O.D.	NOMINAL OUTER JACKET DIA.
4 INCH	4.50"	15 INCH
6 INCH	6.625"	15 INCH

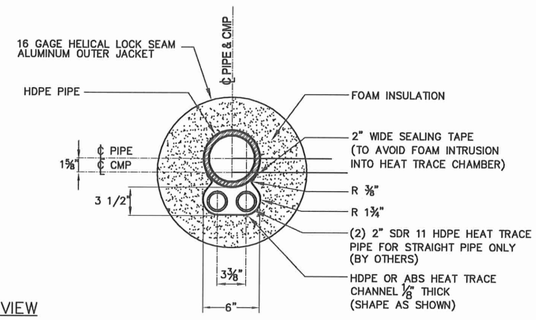

END VIEW

1 / C5.1 4" X 15"- 6" X 15" HDPE ARCTIC PIPE CROSS SECTION - GLYCOL TRACED

1 1/2"=1'-0"

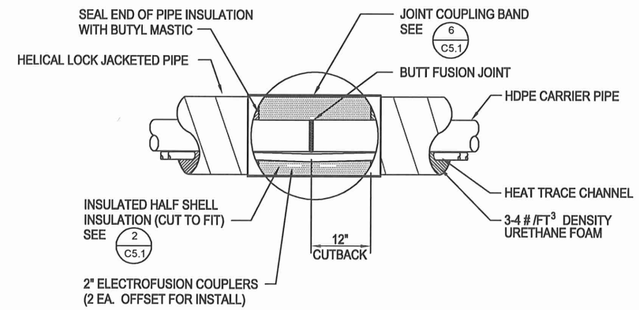

2 / C5.1 BUTT FUSION JOINT w/ HEAT TRACE ELECTROFUSION COUPLERS

NTS (FORCEMAIN ONLY)

"DRAFT- NOT FOR RELEASE"

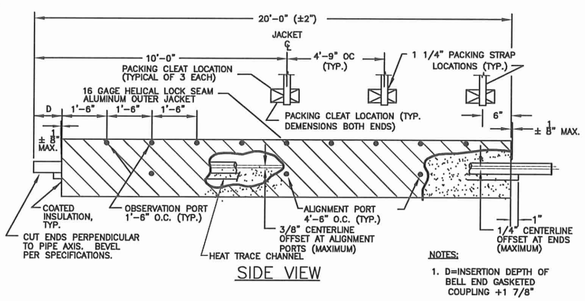

SIDE VIEW

NOTES:

1. D=INSERTION DEPTH OF BELL END GASKETED COUPLING +1 7/8"

INNER CORE PIPE / OUTER JACKET SCHEDULE		
NOMINAL INSULATED PIPE	INNER CORE PIPE O.D.	NOMINAL OUTER JACKETING
8 INCH	8.625"	15 INCH

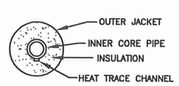

END VIEW

3 / C5.1 8" X 15" HDPE ARCTIC PIPE W/ HEAT TRACE CHANNEL

1 1/2"=1'-0"

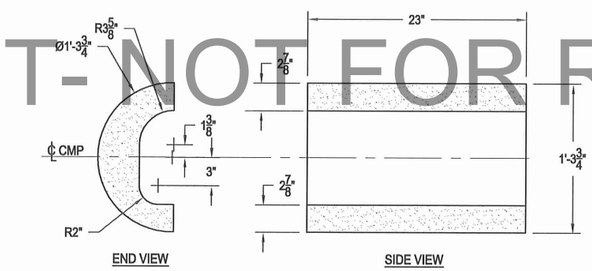

END VIEW SIDE VIEW

5 / C5.1 6" X 15" HDPE ARCTIC PIPE HALF SHELL - GLYCOL TRACED

1 1/2"=1'-0"

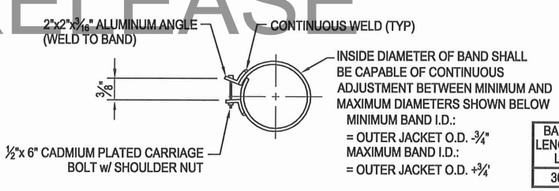

INSIDE DIAMETER OF BAND SHALL BE CAPABLE OF CONTINUOUS ADJUSTMENT BETWEEN MINIMUM AND MAXIMUM DIAMETERS SHOWN BELOW

MINIMUM BAND I.D.:
= OUTER JACKET O.D. -¾"

MAXIMUM BAND I.D.:
= OUTER JACKET O.D. +¾"

BAND LENGTH L	# OF BOLTS EA.	BOLT SPACING S	EDGE DISTANCE D
36"	4	9	4½"

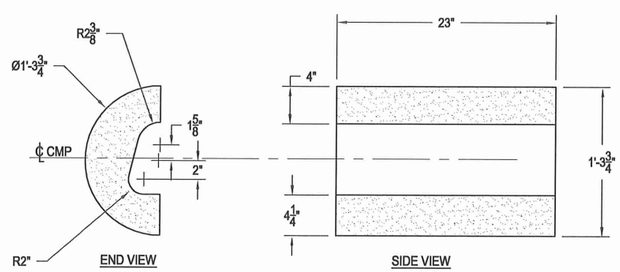

END VIEW SIDE VIEW

6 / C5.1 4" X 15" HDPE ARCTIC PIPE HALF SHELL - GLYCOL TRACED

1 1/2"=1'-0"

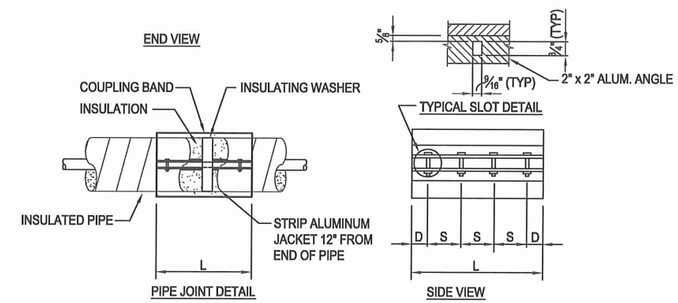

6 / C5.1 ARCTIC PIPE COUPLING BAND

NTS

RECORD DRAWING CERTIFICATE

THESE DRAWINGS REFLECT RECORDED INFORMATION OBTAINED DURING CONSTRUCTION. INFORMATION PROVIDED HEREIN IS ACCURATE TO THE BEST OF MY KNOWLEDGE.

NAME DATE

SCALE: AS SHOWN

BAR IS ONE INCH ON ORIGINAL DRAWING 0 1"

IF NOT ONE INCH ON THIS SHEET, ADJUST SCALES ACCORDINGLY

CONSTRUCTION RECORD

FIELD BOOK

STAKING

FOREMAN

AS-BUILT

INSPECTOR

STATE OF ALASKA 49TH Michael R. Eardman No.6252 REGISTERED PROFESSIONAL ENGINEER

FACULTATIVE LAGOON

ARTIC PIPE DETAILS

CHEFORNAK, ALASKA

CE2 ENGINEERS, INC.

PO BOX 223248 ANCHORAGE, AK 99523 PH: 907-349-1010 FAX: 907-349-1015

REVISION	BY	DATE

Project No. ____ Date OCT. 2011 Designed MRE Drawn DDR Approved MRE

Sheet No. C5.1

G:\ACAD\CHEFORNAK\CYF1101 Sewage Lagoon\C5.1 ARCTIC PIPE DETAILS rev 2.dwg, 10/6/2011 10:10:48 AM, Flash, \\CE2MAIN\LANIER HP C2050/LD520C PCL 6

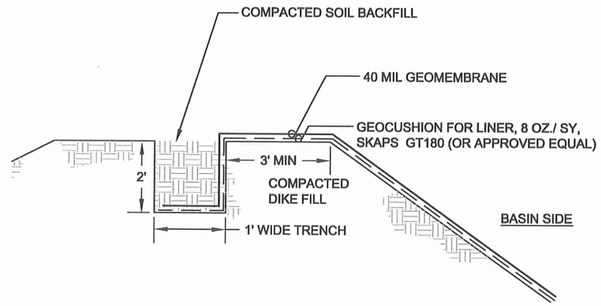

1 / C5.2 LINER KEY DETAIL
SCALE: NTS

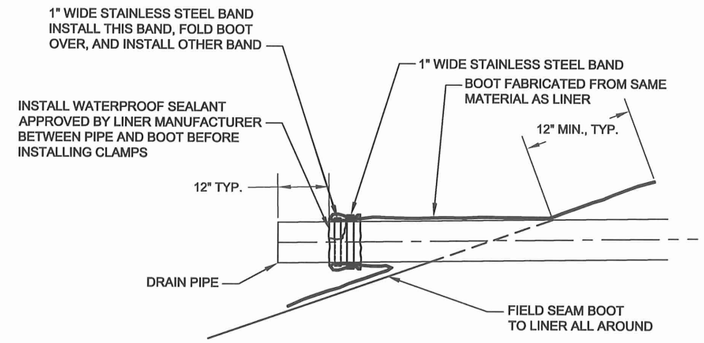

2 / C5.2 BOOT DETAIL
SCALE: NTS

"DRAFT- NOT FOR RELEASE"

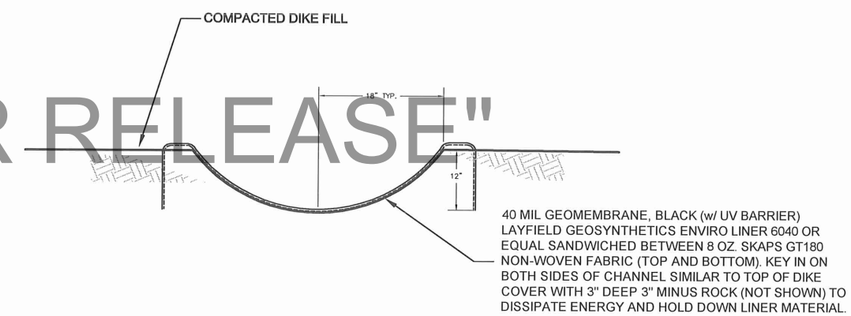

A / C5.2 SECTION B - DRAINAGE SWALE
SCALE: NTS

RECORD DRAWING CERTIFICATE
THESE DRAWINGS REFLECT RECORDED INFORMATION OBTAINED DURING CONSTRUCTION. INFORMATION PROVIDED HEREIN IS ACCURATE TO THE BEST OF MY KNOWLEDGE.
NAME DATE

SCALE:
BAR IS ONE INCH ON ORIGINAL DRAWING
0 1"
IF NOT ONE INCH ON THIS SHEET, ADJUST SCALES ACCORDINGLY

CONSTRUCTION RECORD
FIELD BOOK
STAKING
FOREMAN
AS-BUILT
INSPECTOR

STATE OF ALASKA 49TH Michael R. Eckman No. 8252 REGISTERED PROFESSIONAL ENGINEER

FACULTATIVE LAGOON
LAGOON DRAIN DETAILS
WATER TREATMENT SITE
CHEFORNAK, ALASKA

CE2 ENGINEERS, INC.
PO BOX 222948 ANCHORAGE, AK 99520 PH: 907-349-1010 FAX: 907-349-1015

REVISION	BY	DATE

Project No. ____
Date OCT. 2011
Designed ____
Drawn RZ
Approved ____

Sheet No.
C5.2

G:\ACAD\CHEFORNAK\CYF1101 Sewage Lagoon\C5.2 LEVEL CONTROL.dwg, 10/7/2011 7:53:15 AM, Flash, LANIER MP C2050_LD520C PCL 6BLK WHIT.pc3

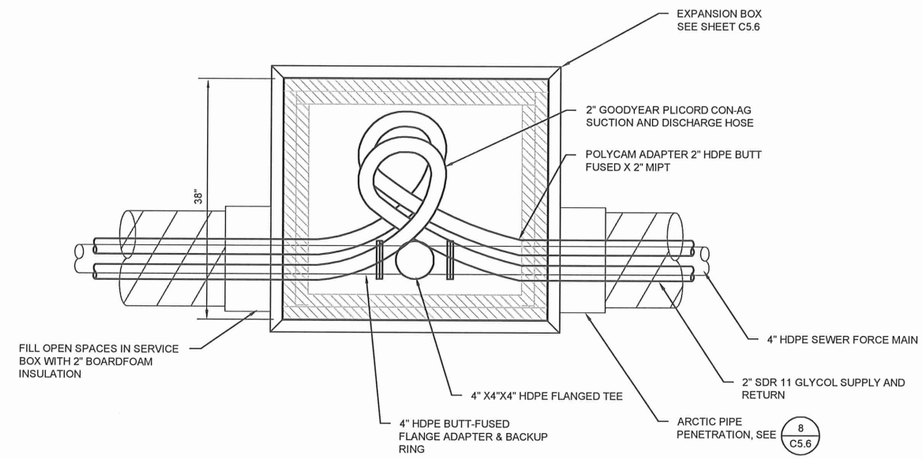

A C7.2 SERVICE LINE CONNECTION - TOP VIEW
1" = 2'-0"

"DRAFT- NOT FOR RELEASE"

G:\ACAD\CHEFORNAK\CYF1101 Sewage Lagoon\C5.3 EXPANSION BOX.dwg, 10/7/2011 7:56:50 AM, Flash, \\CE2MAIN\LANIER MP C2050/LD520C PCL 6

RECORD DRAWING CERTIFICATE
THESE DRAWINGS REFLECT RECORDED INFORMATION OBTAINED DURING CONSTRUCTION. INFORMATION PROVIDED HEREIN IS ACCURATE TO THE BEST OF MY KNOWLEDGE.
NAME DATE

SCALE: AS SHOWN
BAR IS ONE INCH ON ORIGINAL DRAWING
0 1"
IF NOT ONE INCH ON THIS SHEET, ADJUST SCALES ACCORDINGLY

VILLAGE SAFE WATER ALASKA

STATE OF ALASKA 49TH PAUL C. WESNER CE-10276 REGISTERED PROFESSIONAL ENGINEER

2008 WATER AND SEWER IMPROVEMENTS
WATER AND SEWER SERVICE CONNECTION DETAILS
HOOPER BAY, ALASKA

CE2 ENGINEERS, INC.
PO BOX 232946 ANCHORAGE, AK 99523 PH: 907-349-1010 FAX: 907-349-1015

REVISION	BY	DATE

Project No. ____
Date FEB 2008
Designed DWB/LAP
Drawn DWB
Approved PCW

Sheet No. C5.3
SHEET ____ OF ____

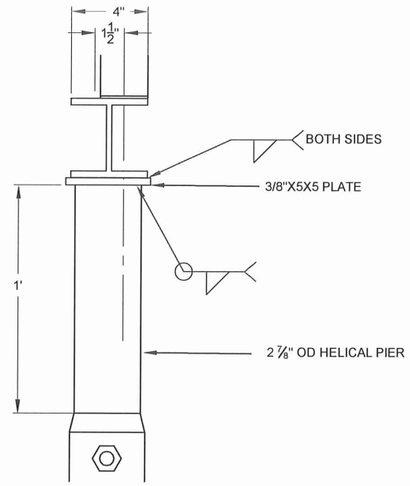

END VIEW

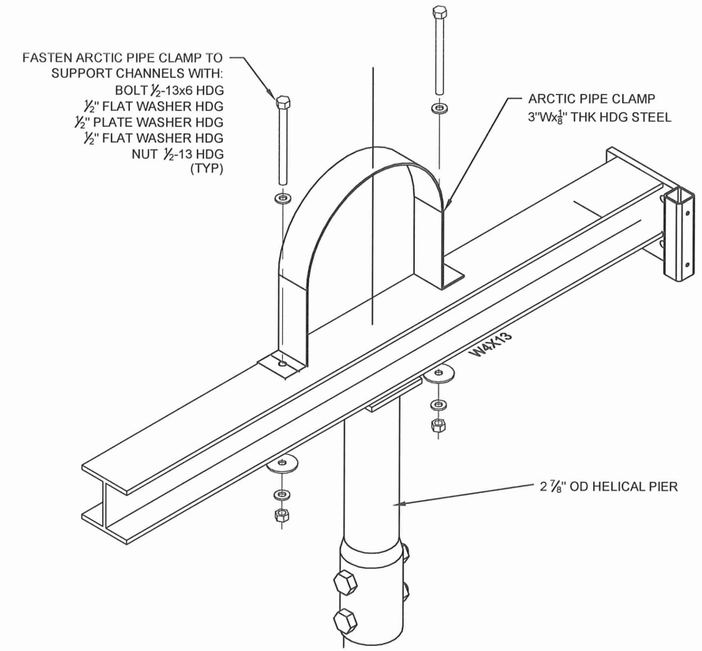

2 / C5.2 PIPE SUPPORT ASSEMBLY ISOMETRIC
SCALE: NTS

NOTE

WHEN INSTALLING ANCHORS, DRIVE UNTIL 8,000 FT-LB IS MEASURED. ADD EXTENSION SHAFTS AS REQUIRED. DEPTH TO FROZEN GROUND IS HIGHLY VARIABLE ALONG PIPELINE ROUTE. MIN. 8' EMBEDMENT.

"DRAFT- NOT FOR RELEASE"

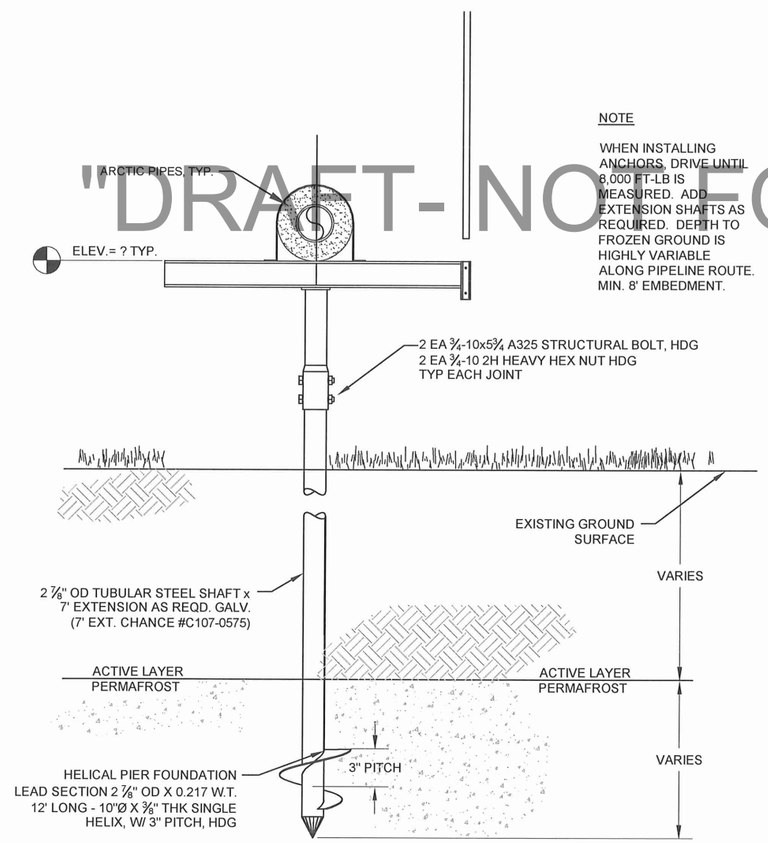

4 / C5.2 HEAT RECOVERY PIPE RACK DETAIL
SCALE: NTS

NOTE

PLACE MARKER POLES AND BRACKETS ON ENDS OF PIPE SUPPORT RUNS, INSIDE AND OUTSIDE OF DIRECTIONAL CHANGES IN ALIGNMENT, AND APPROX. 48' INTERVALS ON STRAIGHT RUNS. PLACE CLOSER AS LOCAL CONDITIONS NECESSITATE.

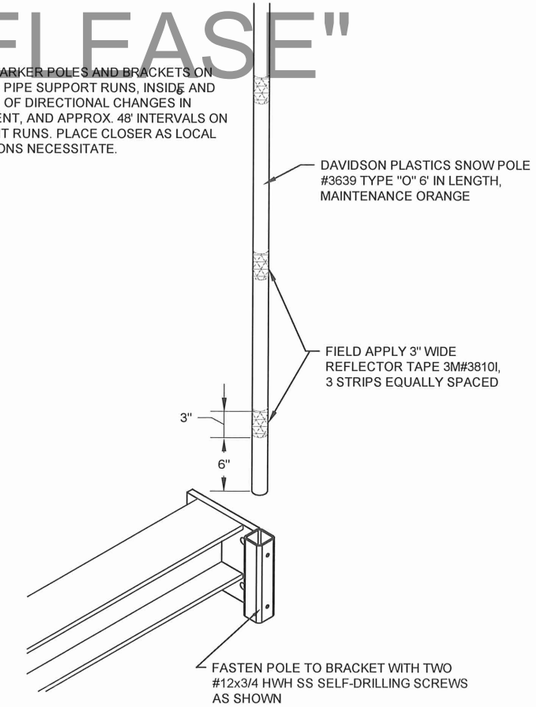

5 / C5.2 SNOW POLE ASSEMBLY ISOMETRIC
SCALE: NTS

RECORD DRAWING CERTIFICATE
THESE DRAWINGS REFLECT RECORDED INFORMATION OBTAINED DURING CONSTRUCTION. INFORMATION PROVIDED HEREIN IS ACCURATE TO THE BEST OF MY KNOWLEDGE.
NAME DATE

SCALE: AS SHOWN
BAR IS ONE INCH ON ORIGINAL DRAWING
0 1"
IF NOT ONE INCH ON THIS SHEET, ADJUST SCALE ACCORDINGLY

CONSTRUCTION RECORD
FIELD BOOK
STAKING
FOREMAN
AS-BUILT
INSPECTOR

STATE OF ALASKA 49TH
Michael R. Eardman No.8252
REGISTERED PROFESSIONAL ENGINEER

FACULTATIVE LAGOON
ARTIC PIPE HELICAL PIER SUPPORT DETAILS
CHEFORNAK, ALASKA

CE2 ENGINEERS, INC.
PO BOX 232946 ANCHORAGE, AK 99523 PH: 907-349-1010 FAX: 907-349-1015

REVISION	BY	DATE

Project No. ____
Date OCT. 2011
Designed MRE
Drawn DDR
Approved MRE

Sheet No.
C5.4

G:\ACAD\CHEFORNAK\CYF1101 Sewage Lagoon\C5.4 HELICAL PIERS.dwg, 10/6/2011 11:16:45 AM, Flash, \\CE2MAIN\LANIER MP C2050/LD520C PCL 6

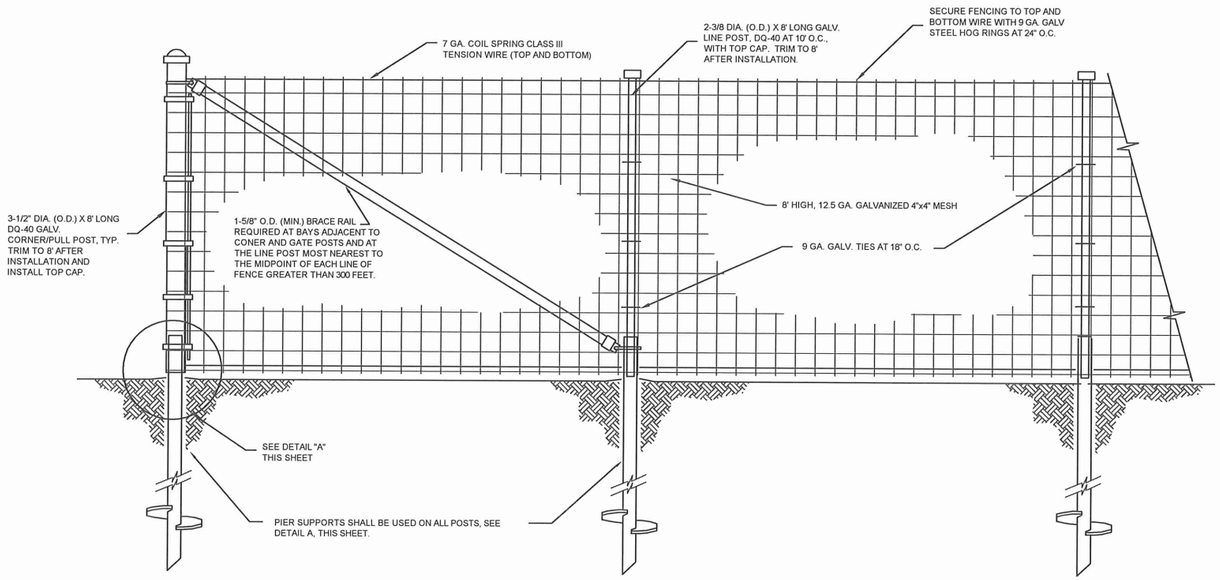

1 FENCE DETAIL (AT CORNER)

SCALE: NONE

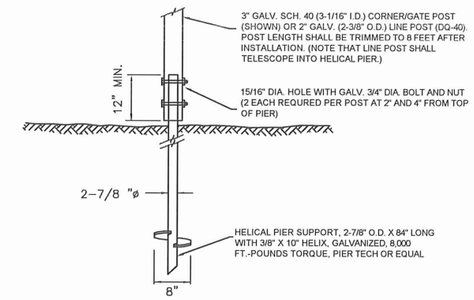

DETAIL A - FENCE POST SUPPORT

NTS

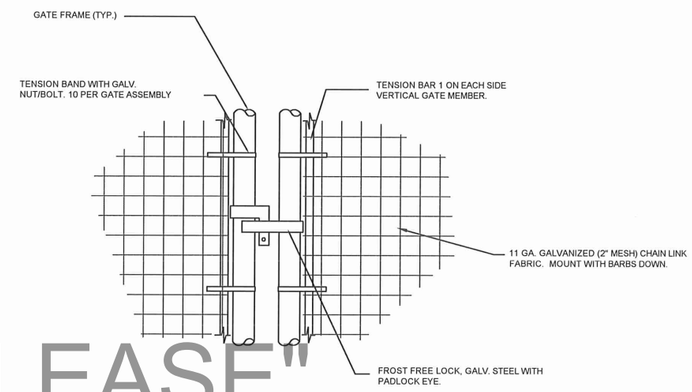

DETAIL B - GATE LATCH DETAIL

"DRAFT- NOT FOR RELEASE"

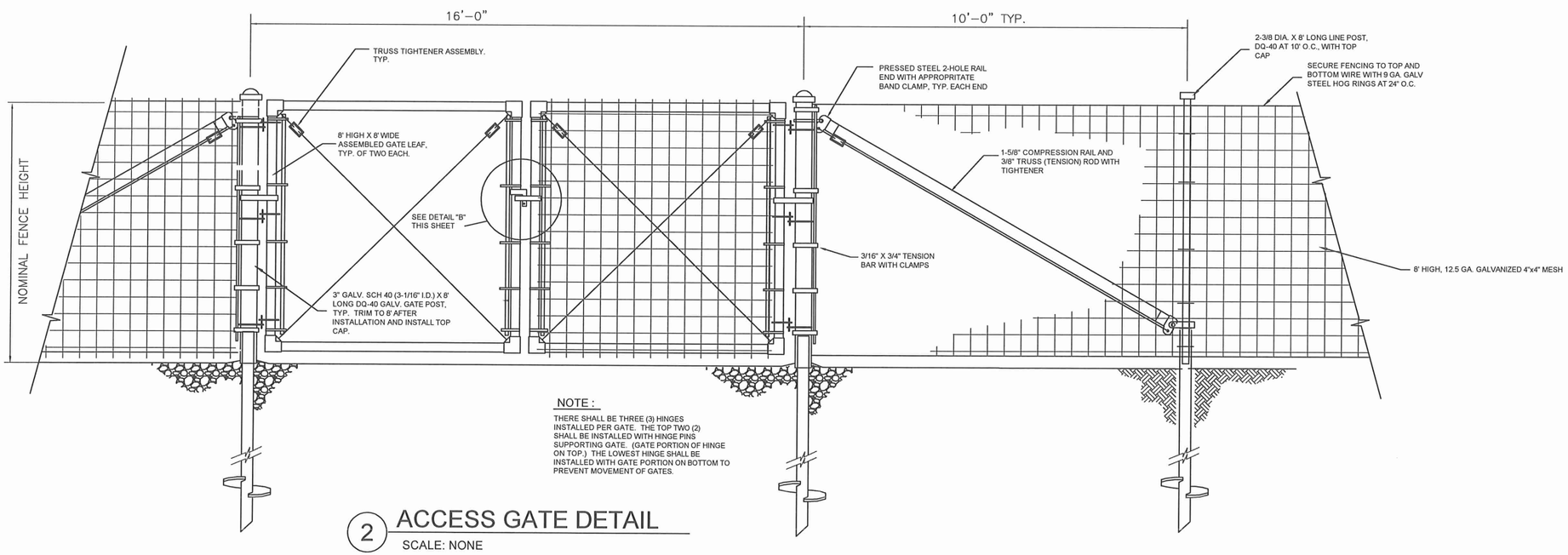

NOTE :

THERE SHALL BE THREE (3) HINGES INSTALLED PER GATE. THE TOP TWO (2) SHALL BE INSTALLED WITH HINGE PINS SUPPORTING GATE. (GATE PORTION OF HINGE ON TOP.) THE LOWEST HINGE SHALL BE INSTALLED WITH GATE PORTION ON BOTTOM TO PREVENT MOVEMENT OF GATES.

2 ACCESS GATE DETAIL

SCALE: NONE

RECORD DRAWING CERTIFICATE

THESE DRAWINGS REFLECT RECORDED INFORMATION OBTAINED DURING CONSTRUCTION. INFORMATION PROVIDED HEREIN IS ACCURATE TO THE BEST OF MY KNOWLEDGE.

NAME DATE

SCALE: AS SHOWN

BAR IS ONE INCH ON ORIGINAL DRAWING 0 1"

IF NOT ONE INCH ON THIS SHEET, ADJUST SCALES ACCORDINGLY

CONSTRUCTION RECORD

FIELD BOOK

STAKING

FOREMAN

AS-BUILT

INSPECTOR

STATE OF ALASKA 6th TH Michael R. Eastman No.6252 REGISTERED PROFESSIONAL ENGINEER

FACULTATIVE LAGOON

FENCING DETAILS

CHEFORNAK, ALASKA

CE2 ENGINEERS, INC.

PO BOX 222946 ANCHORAGE, AK 99523 PH: 907-349-1010 FAX: 907-349-1015

REVISION	BY	DATE

Project No. ____

Date OCT. 2011

Designed PCW

Drawn CM

Approved PCW

Sheet No. C5.5

G:\ACAD\CHEFORNAK\CYF1101 Sewage Lagoon\C5.5 FENCE DETAILS.dwg, 10/6/2011 8:46:27 AM, Flash, \\CE2MAIN\LANIER MP C2050/LD520C PCL 6

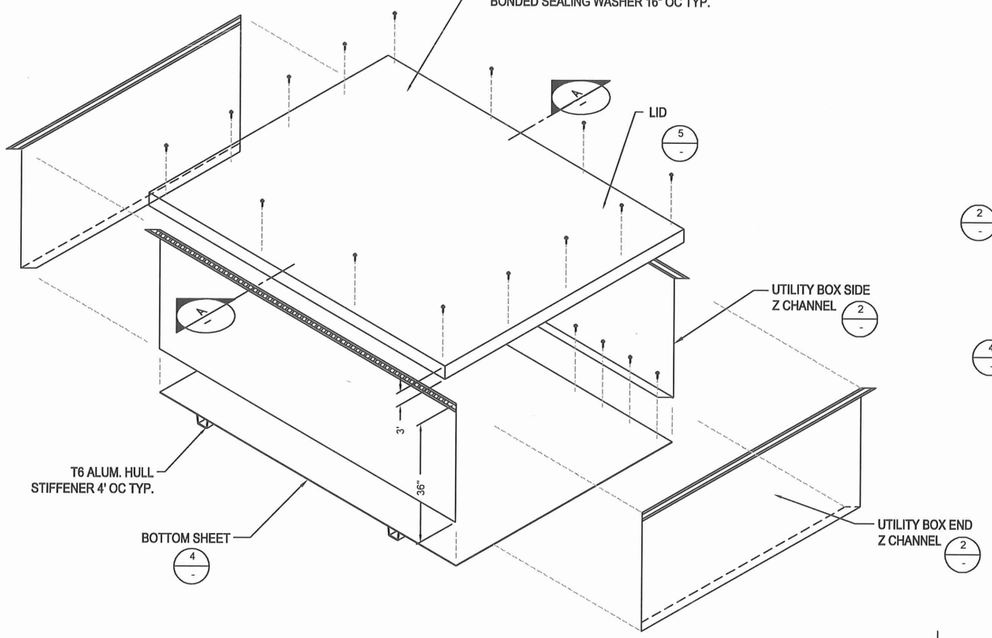

1 C5.6 UTILITY BOX ISOMETRIC
NTS

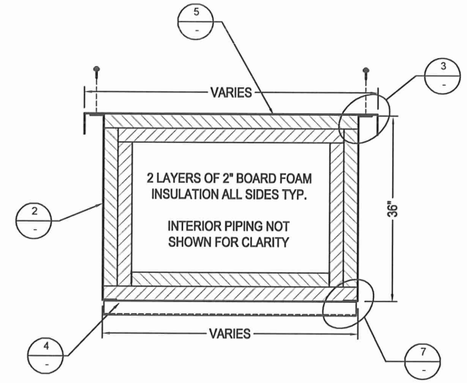

A C5.6 UTILITY BOX SECTION
NTS

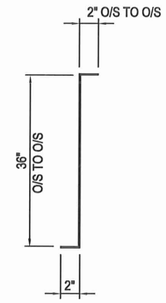

END VIEW

2 C5.6 SIDE Z-CHANNEL SECTION
NTS

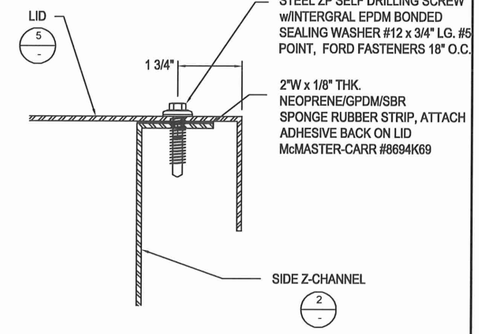

3 C5.6 TOP CORNER DETAILS
NTS

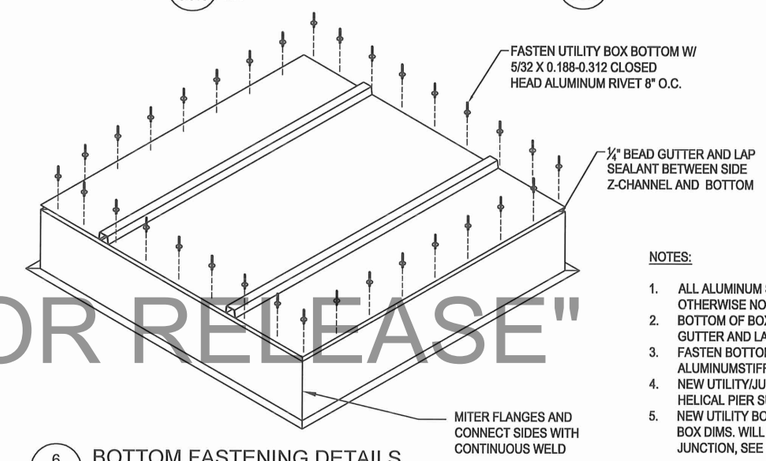

6 C5.6 BOTTOM FASTENING DETAILS
NTS

NOTES:

1. ALL ALUMINUM SHALL BE 5052 3/16" THICK UNLESS OTHERWISE NOTED.
2. BOTTOM OF BOX WILL BE SEALED W/ BUTUAL ACETATE GUTTER AND LAP SEALANT 1/4" BEAD.
3. FASTEN BOTTOM W/ RIVETS BEFORE INSTALLING ALUMINUMSTIFFENERS.
4. NEW UTILITY/JUNCTION BOX SHALL BE MOUNTED ON HELICAL PIER SUPPORTS, SEE DETAIL SHEET C5.6.
5. NEW UTILITY BOXES SHALL BE 48" SQ., NEW JUNCTION BOX DIMS. WILL VERY DEPENDING ON TYPE OF JUNCTION, SEE SHEET C5.12 FOR DETAILS.

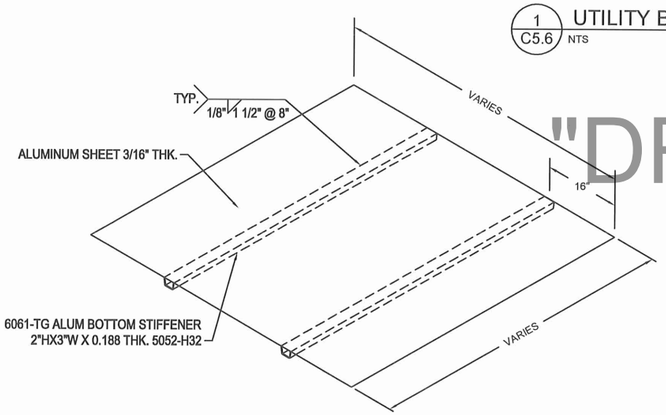

4 C5.6 BOTTOM SHEET DETAIL
NTS

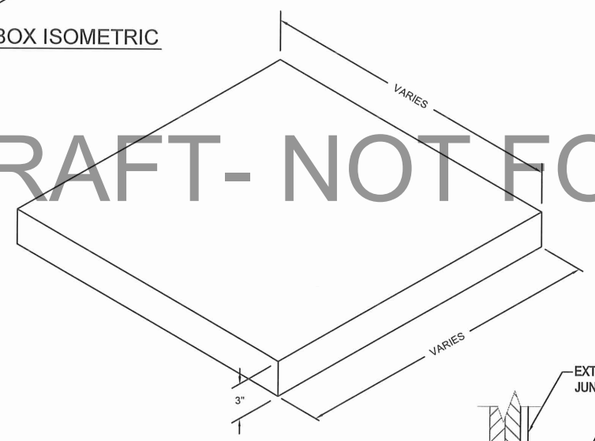

5 C5.6 LID DETAIL
NTS

"DRAFT- NOT FOR RELEASE"

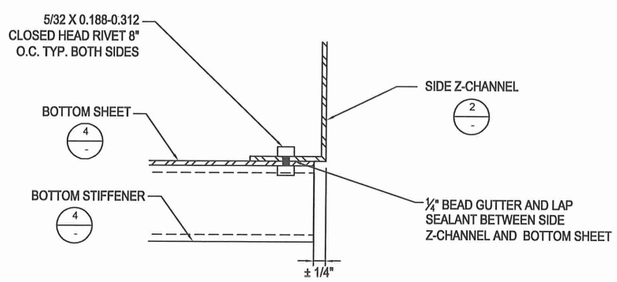

7 C5.6 BOTTOM CORNER DETAILS
NTS

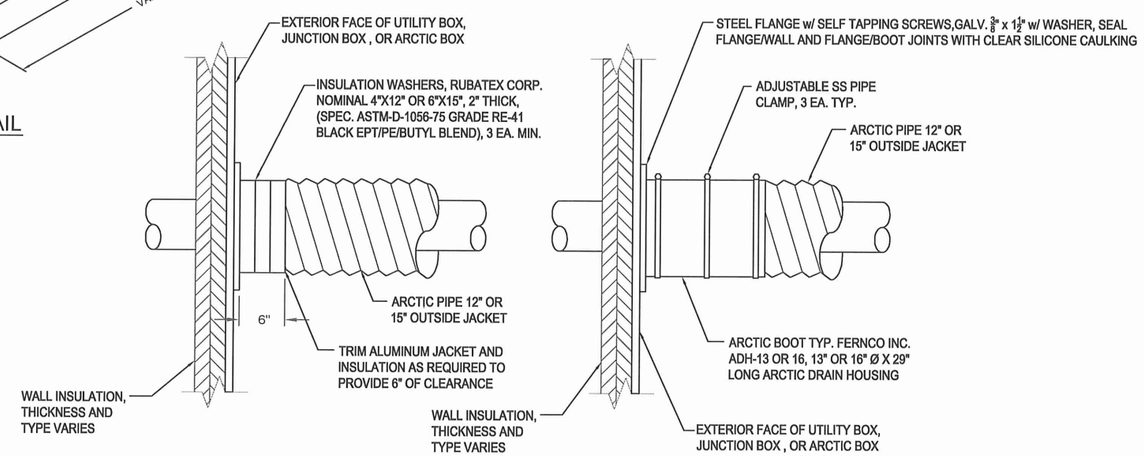

8 C5.6 PENETRATION DETAIL
NTS

RECORD DRAWING CERTIFICATE
THESE DRAWINGS REFLECT RECORDED INFORMATION OBTAINED DURING CONSTRUCTION. INFORMATION PROVIDED HEREIN IS ACCURATE TO THE BEST OF MY KNOWLEDGE.
NAME
DATE

SCALE: AS SHOWN
BAR IS ONE INCH ON ORIGINAL DRAWING
0 1"
IF NOT ONE INCH ON THIS SHEET, ADJUST SCALES ACCORDINGLY

CONSTRUCTION RECORD
FIELD BOOK
STAKING
FOREMAN
AS-BUILT
INSPECTOR

STATE OF ALASKA
Michael R. Eckman
No. 8252
REGISTERED PROFESSIONAL ENGINEER

FACULTATIVE LAGOON
EXPANSION BOX ASSEMBLY DETAILS
CHEFORNAK, ALASKA

CE2 ENGINEERS, INC.
PO BOX 232048 ANCHORAGE, AK 99523 PH: 907-349-1010 FAX: 907-349-1015

REVISION	BY	DATE

Project No. ____
Date OCT. 2011
Designed DWB
Drawn DWB
Approved ____

Sheet No.
C5.6

G:\ACAD\CHEFORNAK\CYF1101 Sewage Lagoon\C5.7 Expansion Box Details.dwg, 10/7/2011 7:52:30 AM, Flash, \\CE2MAIN\LANIER MP C2050/LD520C PCL 6