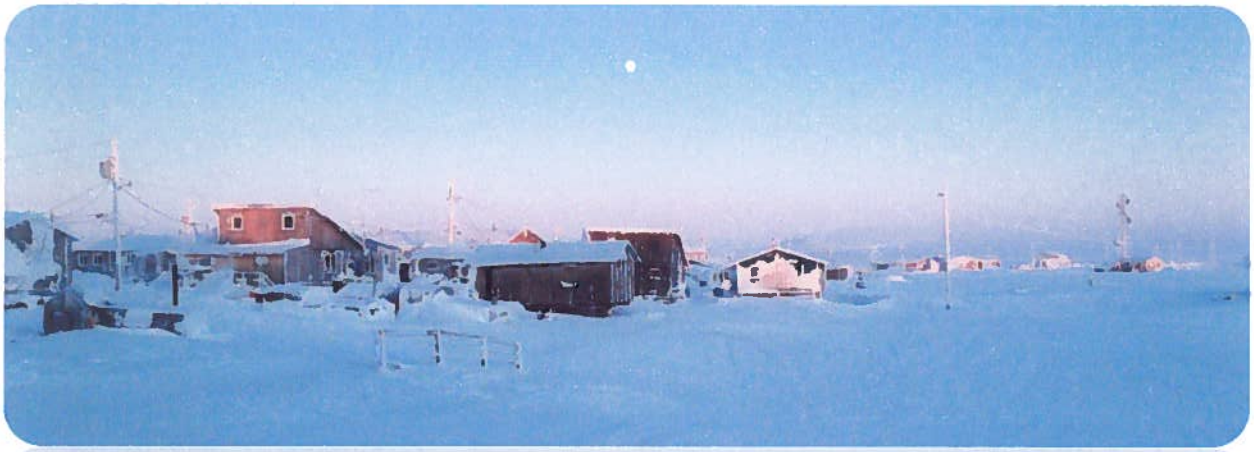

Work Plan for the Chefornak Water and Wastewater Upgrades

City of Chefornak

Last Update: March 2014

This report discussed desired improvements to core sanitation facilities for the City of Chefornak, which will be funded through existing Indian Health Service (I.H.S.) grants. Conceptual drawings are included in a Figures tab at the end of this report. The report was originally entitled, "Selected Water and Wastewater Alternatives."

City of Chefornak, Alaska
RESOLUTION NO. 14-05

A RESOLUTION ACCEPTING WORK PLAN FOR THE CHEFORNAK WATER AND WASTEWATER UPGRADES THROUGH EXISTING INDIAN HEALTH SERVICE GRANTS

WHEREAS: The City of Chefornak, as the owner of water and sewer having accepted ownership of the water and sewer system from the governing body of the Native Village of Chefornak in 2007, hereinafter called the City Council, is the owner of water and sewer, and

WHEREAS: the Village Safe Water Program, hereinafter called VSW, has provided a Work Plan for the Chefornak Water and Wastewater Upgrades to build a new Washeteria Facility and,

WHEREAS: The Council desires to provide an adequate Washeteria for residents of the community and has determined the Work Plan for the Chefornak Water and Wastewater Upgrades for the community:

NOW THEREFORE BE IT RESOLVED: that the Council hereby accept Work Plan for the Chefornak Water and Wastewater Upgrades proposal by VSW.

BE IT FURTHER RESLOVED: that the Mayor is hereby authorized to negotiate, execute, and administer any and all documents, contract and agreements required for granting funds to the City of Chefornak, and a managing funds on behalf of this entity, including any subsequent amendments to said agreements.

PASSED, APPROVED, AND ADOPTED by the city council of the City of Chefornak this 12th day of August, 2014.

Rosalie C Mathew
Mayor

Attest:

Alexandra L. Anderson
City Clerk

Selected Water and Wastewater Alternatives

City of Chefornak

Prepared by:
CE2 Engineers, Inc.

Final Update: March 2013

This report discusses desired improvements to core sanitation facilities for the City of Chefornak, which will be funded through existing Indian Health Service (IHS) grants. Conceptual drawings are included in a Figures tab at the end of this report.

Table of Contents

SECTION 1 WATER SOURCE/TREATMENT 1-1

1.1 EXISTING FACILITIES 1-1

1.2 PHS WELL AND PUMP HOUSE UPGRADES 1-1

1.3 BACKUP WELLS AND NEW PUMP HOUSE ALTERNATIVE 1-2

1.4 PROPOSED PUMP HOUSES 1-3

SECTION 2 WATER DISTRIBUTION 2-1

2.1 WATER DISTRIBUTION LOOP UPGRADE ALTERNATIVE 2-1

2.2 UPGRADE EXISTING WATERING POINTS ALTERNATIVE 2-1

2.3 COMMUNITY WATER HAUL 2-2

SECTION 3 PUBLIC WASHETERIA AND WATER STORAGE TANK 3-1

3.1 NEW WASHETERIA 3-1

3.2 NEW WATER STORAGE TANK 3-1

SECTION 4 WASTEWATER COLLECTION AND TREATMENT 4-1

4.1 HOME WASTEWATER COLLECTION 4-1

4.2 CENTRAL HONEY BUCKET DUMP STATION ALTERNATIVE 4-1

4.3 FACULTATIVE LAGOON WASTEWATER TREATMENT ALTERNATIVE 4-2

SECTION 5 WATER AND WASTEWATER SELECTED OPTIONS 5-1

5.1 SELECTED OPTIONS FOR WATER 5-1

5.2 CONCEPTUAL COST ESTIMATES FOR WATER OPTIONS 5-3

5.3 SELECTED OPTIONS FOR WASTEWATER 5-10

5.4 CONCEPTUAL COST ESTIMATES FOR WASTEWATER OPTIONS 5-10

List of Figures

Figure 1 Pump House Conceptual Floor Plan

Figure 2 Site Plan

Figure 3 Water System Schematic

Figure 4 Existing Watering Point

Figure 5 Upgraded Water Point

Figure 6 Existing Flush Tank and Haul Collection System

Figure 7 Power Plant Site Plan

Figure 8 New Washeteria Conceptual Floor Plan

Figure 9 Proposed Collection Station

Figure 10 Proposed Facultative Lagoon

SECTION 1 WATER SOURCE/TREATMENT

1.1 EXISTING FACILITIES

The existing well and water treatment plant that were constructed by Public Health Service (PHS) has been supplying water to the community through the water plant for over 40 years. The City water meets the health standards for drinking water, but the salt content is more than the taste and color standards EPA has established for esthetics. Presently, the school (with the school construction camp feeding off school processed water) and the public watering points consume approximately 3500 gallons of this water per day when school is in session. Camp usage will end in April 2013. Demand for the well water is about 7.5 gallons per minute (gpm) when the school water plant is operating, and average 24-hour demand is about 2.1 gpm.

Treatment at the PHS-constructed water treatment plant originally consisted of coagulant addition to the well water and multimedia filtration, followed by chlorination before being stored in a 4,000-gallon steel water storage tank, used as a buffer tank for the water distribution system. Presently, filtration is performed, but not with coagulants, and only a hypochlorite solution is added to the water before it enters the 4,000-gallon tank.

1.2 PHS WELL AND PUMP HOUSE UPGRADES

The existing system is a very viable proven alternative, as it has been supplying “utility water” (water for laundry, washing, steam baths, and other non-potable uses) for over four decades. The public has been satisfied with this system and wants it to continue.

However, certain improvements need to be made to this system in order for it to function for the next twenty years. These needed improvements are:

- Upgrade the wellhead to be more sanitary, energy efficient, and easier to maintain. This would involve installing a new submersible well pump, improved wiring and controls, a well-insulated and more robust and compact well head built for easier maintenance, grading around the well casing to direct away standing water, and an adequately-supported arctic pipe duct to the pump house;

- A new pump house to replace the old dilapidated structure with failing floors, problematic piping and heating system, worn out pressure and circulating pumps, failing steel water storage tank, as well as old, poorly operating process and building controls. The new pump house would be constructed at the location of the existing building, and would be built on a gravel pad with Triodetic foundation. The new pump house could be about half the area of the existing plant, as it would only need to house a 4,000 gallon HDPE water storage tank, roughing filter, pressure pumps, heating system, and controls. The new pump house should be constructed from structural insulated panels (SIP) for

energy efficiency. A conceptual floor plan for this proposed pump house is shown in Figure 1. All figures are presented in the "Figures" tab at the end of this report.

1.3 ALTERNATE WELLS AND NEW PUMP HOUSE ALTERNATIVE

Two wells were drilled on the south end of the community in 2002 to a depth of about 250 feet. These two wells, along with the original PHS well, are shown in Figure 2. The aquifer consisted of uniform fine and well-rounded sand in a five foot deep layer under a flat layer of frozen silt and volcanic ash. These wells were tested extensively for about nine months after drilling to determine their capacity and water quality.

Originally, each well was pumped at 10 gpm. It was found that after about a month, the original total dissolved solids (TDS) rose from about 290 mg/l up to about 3000 mg/l and ranged from 3000 to 3200 mg/l at the 10 gpm flow rate. Further tests at 5-gpm production rate found that the TDS settled at 1,000 mg/l. A pumping rate of 3 gpm brought TDS values down to 600 mg/l. It was surmised that a layer of fresh water from seasonal seepage through the strata from tundra lakes brought a layer of fresh water to the surface of the more saline water below the frozen ground overlying the aquifer. After winter and early spring, fresh water replenished the layer of fresh water "mined" during the winter by pumping.

Geophysical experimentation was performed in north-south and east-west lines to determine if the frozen layer of soil above the five-foot thick aquifer was flat, or did it possibly slope in any direction toward the foothills to the south. If the interface was sloped, there would be a strong possibility of finding a thick layer of fresh water that could supply the needs of the community. Unfortunately, it was found that the interface between the aquifer and the frozen layer was uniformly flat in both east-west and north-south directions. By limiting well pumping rates, up-coning of saline water could be minimized and the TDS of the water could be limited to 1000 mg/liter or less. Water quality for these wells was found to have organic color above 15 mg/l, and TDS in the order of 600 to 3000 mg/l, depending upon pumping rate. See Appendix B for graph of well pump test for TDS results. This water would be adequate for the "utility water" uses of the watering points and Washeteria, and as well as feed water for the school ultrafiltration/reverse osmosis (UF/RO) water treatment system for their potable water.

These two wells could serve as an alternate water source to the PHS well, and working together, could limit TDS increases in all wells. A pump house virtually identical to that envisioned for the PHS pump house upgrade would be constructed near one of the two south wells. The wells would be connected with arctic pipe, and the pump house would be connected by arctic pipe to the watering point circulation loop piping, as shown in schematic form in Figure 3.

The two pump houses would be connected by a radio link, so that each pump house would pressurize the watering points water distribution loop, thus spreading the water pumping load between the two well water systems, easing pressure on the aquifers.

1.4 PROPOSED PUMP HOUSES

The two proposed pump houses would provide the necessary infrastructure that would support the original PHS well in the northeast corner of the community, as well as the two wells in the south part of the community drilled in 2002. Features of the proposed pump houses include the following:

The building would be constructed of structural insulated panels (SIP) for high insulation value, as well as rapid erection of the building shell.

The building foundation would be a Triodetic® space frame on the tundra. This space frame would evenly distribute the building load evenly over the ground surface without the expense of drilling and setting piles.

An HDPE elliptical horizontal leg tank of 4,000 gallons capacity would provide a buffer between the wells and the water distribution system. This tank was selected to provide a larger footprint for lower floor loading, as well as a lower tank height to allow for a lower ceiling height, with subsequent building cost savings.

Water from wells would enter the building and be filtered, chlorinated, and would flow into the water storage tank. A separate room would provide for chlorination. Level controls in the tank would control the well pump, and would protect pressure pumps from dry running.

Two pressure pumps would provide pressurization of the community water distribution loop that feeds the watering points and the school.

Two circulation pumps next to the pressure pumps provide circulation of the water distribution loops, along with other circulation pumps in the other pump house and in the mechanical area of the Washeteria.

Heat would be provided through two oil-fired condensing boilers for the building space, well heat, and backup heat of the water distribution loop. There is also the possibility of using waste heat from the power plant for some low level heating of water in the pump house. This will have to be later investigated.

Electric power for the pump house would be provided from the village power plant distribution system.

A simple control panel would provide automatic control of the pump house functions, monitoring of the critical operational parameters of the pump house and wells, with manual operating backup.

SECTION 2 WATER DISTRIBUTION

The twelve watering points were constructed by PHS in the latter half of the 1980s to serve as a source of water for nearby residences, with electrically operated valves to supply water to buckets with hoses. The watering points are run in a daisy-chain fashion with 3-in bare HDPE pipes in an arctic pipe duct run on the ground surface on sleepers. The watering point structures consist of small framed buildings that provide insulated space for the piping, valves, heaters, and token drops for the watering point system. Figure 4 shows details of these existing watering points. Figure 2 shows the location of these existing watering points.

These facilities are showing their age (almost 25 years). They use a considerable amount of electrical energy for heating because they are drafty due to aging of the structure, settlement, and deterioration of the insulation, which makes them uneconomical to operate. The structures are getting to the end of their useful life. However, they are an accepted source of "utility water" for laundry, washing, and bathing, and need to be upgraded before they become totally unusable.

2.1 WATER DISTRIBUTION LOOP UPGRADE ALTERNATIVE

Because of the nature of their water use and location, it is advantageous for several entities in the community to receive piped water from the existing watering point distribution system. These entities are:

- Chaputnguak School. Presently the school has an ultrafiltration/reverse osmosis water treatment system that removes organic color and salt from the water provided by the existing PHS well. During water treatment, this process uses 7 to 10 gallons per minute of water, through an existing service line off the water distribution loop.
- The Washeteria. Piped water will provide "utility water" for washing machines and showers at this facility.

2.2 UPGRADE EXISTING WATERING POINTS ALTERNATIVE

A prototype of the new watering point is being developed for operational testing this winter at two locations within the community. The prototypes will be built from aluminum sheet and plate with 4-inch thick polystyrene foam insulation, and will be constructed to be more compact and energy efficient than the existing wooden structures. These prototypes will be evaluated this winter and modified as necessary to meet the needs of users before the whole system is changed. A conceptual rendition of the prototype watering point is shown in Figure 5.

The existing water distribution loop consists of 8800 LF of 3 in SDR11 bare HDPE pipe inside of an 8 in x 15 in arctic pipe duct. This will be upgraded at the 30 junction boxes between arctic piping runs for increased reliability, maintenance accessibility, and energy efficiency. A cost estimate for this upgrade is included in Section 5.3 Table 3. Circulation of the existing water distribution loop to the watering points will be accomplished by circulation pumps at each of two

proposed pump houses and in the proposed Washeteria mechanical room. By using this relay system, hydraulic losses are addressed at three equidistant locations along the loop, and achieve more reliability through redundancy. Heating of the water loop will be accomplished mainly through engine cooling system heat recovery at the power plant, with oil boiler backup. This will provide an economical system of heating, with minimal cost to the community.

2.3 COMMUNITY WATER HAUL

Each water user, be it a residence, office, clinic, or other, would have to be set up with a holding tank, basic plumbing with a lavatory, kitchen sink, and other plumbing fixtures as desired by the residents or users. The water would be hauled by a 100-gallon trailer pulled by a 4-wheeler in the summer, or sled and snow machine in the winter. The towed tank would be filled from a bulk-fill system at the watering point and dispensed to the user's holding tank with a portable pump mounted on the trailer or sled, as seen in Figure 6.

A few homes receive hauled water now. High snow drifts, high user fees, need for full participation, and the limited volume of water are all reasons that the community elected to stay with community services. Like the piped water system, a community haul system is not affordable.

SECTION 3 PUBLIC WASHETERIA AND WATER STORAGE TANK

3.1 NEW WASHETERIA

A new Washeteria would be constructed to provide for washing and drying laundry, showers, and an incidental use for community meetings. This facility would also provide heating for the watering points water distribution loop, using power plant waste heat from the engine cooling circuit. The Washeteria and mechanical spaces would have an area of about 1500 square feet, and would be constructed on the same lot as the existing power plant for ease of construction, convenience of waste heat supply and access by the public (Lot 7, Block 7, Tract A, USS 4421). A Site Plan for the proposed site is presented in Figure 7, and a conceptual floor plan is shown on Figure 8.

The Washeteria would be located on the northeast corner of the lot where the existing City power plant is located

3.2 NEW WATER STORAGE TANK

In addition, a 20,000-gallon utility water storage tank located adjacent to the proposed Washeteria would serve as a buffer tank for the watering points and school through the existing water distribution loop. This would provide for a week's worth of water if the two wells and pump houses were not operating. This would ensure that the water loop would stay flooded and circulating, preventing freezing of the water loop.

SECTION 4 WASTEWATER COLLECTION AND TREATMENT

4.1 HOME WASTEWATER COLLECTION

Although not included in the scope of work of funding at this time, at least four potential methods for home wastewater collection are identified below:

- **Honeybucket:** A 5-gallon pail or special container with gasketed and secured lid for hauling honeybucket waste to a dump station or land disposal site. This option requires no plumbing for wastewater in the house.
- **Composting Toilet:** This alternative eliminates the need for honey bucket disposal of black wastewater by composting the waste and breaking it down in the home. Other variations include urine separation schemes. This is a promising technology, with a number of different systems out on the market. These composting systems can be tested in selected homes and if they prove successful and economically viable, they can be gradually installed and replace many of the existing honey bucket systems.
- **Conventional Holding Tank:** This system would be part of a "flush, tank, and haul" system, where the wastewater (gray and black water) would flow through conventional household drain pipes into a holding tank, which would be periodically pumped out with a vacuum trailer or sled and disposed of into a sewage lagoon. This is presently operational in six homes.
- **Other Innovation:** This would consist of gray water recycling systems, home biological systems, and other non-conventional methods of wastewater treatment at household scale. Systems proven in the community environment could be transitioned into the majority of residences.

4.2 HONEY BUCKET DUMP STATION ALTERNATIVE

Two alternatives for community wastewater collection were evaluated: a Boardwalk for hauling waste to the Lagoon or Landfill, or a Wastewater Dump Station. The Boardwalk was evaluated and determined not to be cost effective, so that option was discarded in favor of a wastewater dump station with force main for community or self-haul. This alternative would place a wastewater collection station or dump station in the community near the location of the beginning of the force main for the purpose of collecting honey bucket waste or holding tank waste from haul vehicles. The dump station would be able to transfer wastewater collected from holding tanks by haul vehicles through hose and quick-connect fittings to a wet well containing a submersible pump that will transfer this waste to the force main and facultative lagoon. A manual dumping station will also be connected to the wet well for emptying honey buckets. Potential problems with plastic bags will have to be addressed. The dump station will be designed to be easily hosed down for sanitation. Locating the dump station near the edge of the

community and near the force main to the lagoon would eliminate the need for a long boardwalk for haul vehicles to travel to the lagoon. See Figure 9 for a conceptual plan view of this proposed facility.

4.3 FACULTATIVE LAGOON WASTEWATER TREATMENT ALTERNATIVE

This alternative would provide treatment for community generated wastewater, which includes honey bucket domestic waste, wastewater delivered from holding tanks by haul vehicles to the dump station, as well as school and Washeteria waste water flows. The lagoon would provide reductions for Biochemical Oxygen Demand (BOD_5) and Total Suspended Solids (TSS) to levels required by State and EPA regulations for discharge. The lagoon would also provide enough hydraulic retention (approximately 240 days) to hold treated wastewater during the winter until the lagoon can be pumped out in the spring after thaw and/or the fall before freeze-up. The lagoon would consist of three cells: the first cell for sludge settling, which would remove about 50% of the BOD_5 from the waste stream, followed by a primary cell, and finally a secondary cell. Also included would e a force main from the Washeteria, and Honeybucket Pump Station to the lagoon. The proposed lagoon location and size is shown in Figure 10.

The lagoon and force main are discussed in, “Chefornak Wastewater Lagoon and Force Main Design Analysis Report, September, 2011, CE2 Engineers.”

SECTION 5 WATER AND WASTEWATER SELECTED OPTIONS

5.1 SELECTED OPTIONS FOR WATER

The selected options for water consist of the following components:

Water Source / Treatment

- Upgraded PHS Well and New Pump House (Pump House 1)
- 2 Upgraded 2002 Wells and New Pump House (Pump House 2)

Water Distribution

- Upgraded Water Distribution Loop
- Upgraded Watering Points
- 20,000-gallon Washeteria Water Storage Tank

Water Users

- Washeteria
- School
- Homes

These water options are delineated in the flow chart below.

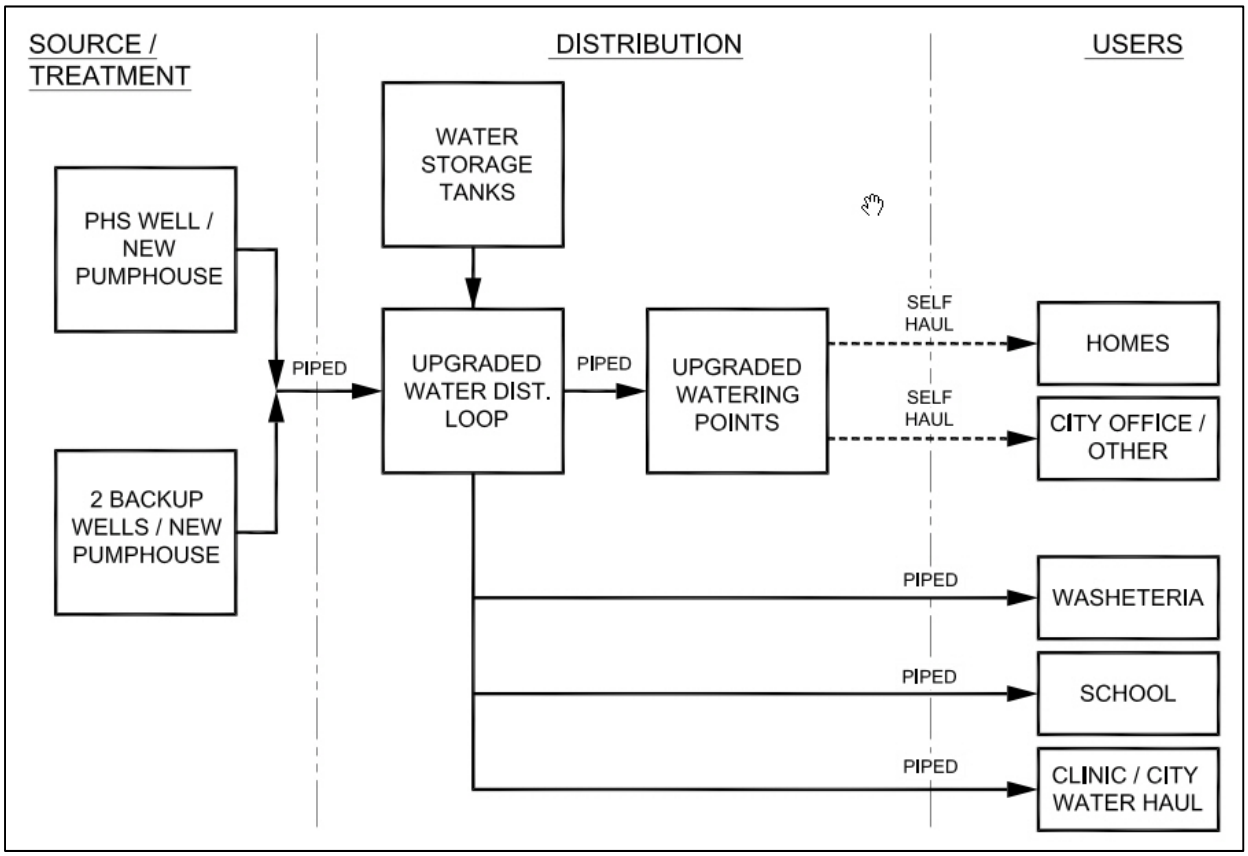

5.2 RECOMMENDED SYSTEM PROCESS

1. **WATER SOURCE—PUMP HOUSE 1.** Water is pumped from the existing PHS well through a roughing filter, and then a hypochlorite solution is added just before the well water enters into a 4,000-gallon water storage tank. The tank serves as a buffer for water entering the existing water distribution system. Pressure pump pp-1 maintains a constant 50-psi pressure in the water distribution loop. Pumping is coordinated through a radio link back to the Washeteria to manage pumping into the loop through pump houses 1 and 2 to equalize water draw from the three well sources. Circulating pump cp-1 provides part of the circulation of the water distribution loop. The first priority of the water pumping is to keep the 20,000-gallon water storage tank filled for supplying the school Ultra Filtration / Reverse Osmosis (UF/RO) water treatment system. The well is kept thawed by a circulation loop down the casing, heated by the water loop through a heat exchanger, and backed up by oil heat.

2. **WATER SOURCE—PUMP HOUSE 2.** This system is virtually identical to pump house 1 except that there are two wells serving this pump house. Water is pumped from the existing two wells drilled in 2002 through a roughing filter, and then a hypochlorite solution is added just before the well water enters into a 4,000 gallon water storage tank. The tank serves as a buffer for water entering the existing water distribution system. Pressure pump pp-2 maintains a constant 50-psi pressure in the water distribution loop. Pumping is coordinated through a radio link back to the Washeteria to manage pumping into the loop through pump houses 1 and 2 to equalize water draw from the three well sources. Circulating pump cp-2 provides part of the circulation of the water distribution loop. The first priority of the water pumping is to keep the 20,000-gallon water storage tank filled for supplying the school ultra filtration / reverse osmosis (UF/RO) water treatment system. The wells are kept thawed by a circulation loop down the casing, heated by the water loop through a heat exchanger, and backed up by oil heat.

3. **WATER DISTRIBUTION—TYPICAL WATERING POINT.** There are twelve watering points that will be upgraded to more energy efficient and robust water dispensing systems for public use. Water from these watering points will be used for non-potable uses, such as laundry, washing and bathing, and steam baths. The upgraded watering point enclosures will be constructed from aluminum plate, with 4-in of rigid Styrofoam inside the enclosures. Heating will be done by two systems of thermostatically controlled heat trace for simplicity of operation.

4. **WATER DISTRIBUTION AND HEATING—WASHETERIA.** The water distribution system is heated here by recovering waste heat from the nearby diesel generator power plant, with oil heat backup from the Washeteria mechanical room. An outside 20,000-gallon water storage tank is kept filled by a control system that opens motorized valve mv-1 to let in approximately 10 gpm to this tank from the water

distribution system. The well pumps in pump house 1 and 2 are ultimately controlled from the Washeteria to limit stress on the aquifers, thus minimizing salt intrusion. When the school requires water for their UF/RO treatment system, pressure pump pp-3 supplies the water from this tank. The 20,000-gallon tank provides a buffer for the wells, and also serves as a backup in case the wells or pump house are taken down for maintenance. Heating for the 20,000-gallon insulated tank is accomplished by utilizing recovered waste heat from the power plant, or the Washeteria boilers. Water from the distribution loop also supplies water for the Washeteria washers, toilets, shower, and sinks.

5. **WATER DISTRIBUTION—SCHOOL WATER SERVICE.** The school UF/RO system requires approximately 10 gpm when it is treating well water to potable water standards. When this system is operating, a radio link to the Washeteria tells pressure pump pp-3 to supply water to the water distribution loop, thus preventing the wells from being overstressed. Once the flow to the school is stopped, then the 20,000-gallon tank to the Washeteria is again filled by the wells.

5.3 CONCEPTUAL COST ESTIMATES FOR WATER OPTIONS

Conceptual cost estimates are shown on the following pages, based upon the alternatives presented previously.

Table 1-PHS Well and Pump House Upgrades

Pump House 1 (Replacing Old PHS Water Plant and Upgrading 1 Well)					
Item	Activity	Unit	Unit Price	Quantity	Cost
1	Triodetic Foundation	LS	$14,000	1	$14,000
2	Floor + Steps	LS	$14,000	1	$14,000
3	Structure Shell (SIP)	LS	$14,000.00	1	$14,000
4	Metal Siding and Roofing	LS	$8,500.00	1	$8,500
5	Doors	LS	$6,000	1	$6,000
6	Horizontal Tank HDPE	LS	$8,000	1	$8,000
7	Mechanical Equipment	LS	$75,000	1	$75,000
8	Electrical Equipment	LS	$50,000	1	$50,000
9	Well improvements and arctic pipe connecting lines	LS	$35,000	1	$35,000
10	Boardwalk to building	FT	$500	100	$50,000
11	Core Crew (Supt, Plumber, Electrician)	LS	$90,000	1	$90,000
12	Local Force Account Crew	LS	$144,000	1	$144,000
13	Freight	LS	$75,000	1	$75,000
	*2013 dollars assuming force account construction / local wages			Subtotal	$583,500
				Contingency (20%)	$116,700
				Subtotal w/contingency	$700,200
				Design (8%)	$56,000
				Construction Management	$126,000
				VSW EMT(8%)	$56,000
				NE Pumphouse 1 Total	**$938,200**

Table 2-Alternate Wells and New Pump House Alternative

Pump House 2 (New Pump House for South Well Field and Hooking up 2 Wells)					
Item	Activity	Unit	Unit Price	Quantity	Cost
1	Triodetic Foundation	LS	$14,000.00	1	$14,000
2	Floor + Steps	LS	$14,000.00	1	$14,000
3	Structure Shell (SIP)	LS	$14,000.00	1	$14,000
4	Metal Siding and Roofing	LS	$8,500.00	1	$8,500
5	Doors	LS	$6,000	1	$6,000
6	Horizontal Tank HDPE	LS	$8,000	1	$8,000
7	Mechanical Equipment	LS	$75,000	1	$75,000
8	Electrical Equipment	LS	$50,000	1	$50,000
9	Well improvements and arctic pipe connecting lines	LS	$100,000	1	$100,000
10	Boardwalk to building	FT	$500	300	$150,000
11	Core Crew (Supt, Plumber, Electrician)	LS	$90,000	1	$90,000
12	Local Force Account Crew	LS	$144,000	1	$144,000
13	Freight	LS	$75,000	1	$75,000
	*2013 dollars assuming force account construction / local wages			Subtotal	$748,500
				Contingency (20%)	$149,700
				Subtotal w/contingency	$898,200
				Design (8%)	$71,900
				Construction Management (15%)	$134,700
				VSW EMT(08%)	$71,856
				S Pumphouse 2 Total	**$1,176,656**

Table 3-Water Distribution Loop Upgrade Alternative

Water Distribution Loop Upgrade					
Item	Activity	Unit	Unit Price	Quantity	Cost
1	Junction Box Materials+ Welding	LS	$6,000	30	$180,000
2	Core Crew (Supt, Plumber, Electrician)	LS	$1,100	30	$33,000
3	Local Force Account Crew	LS	$1,100	30	$33,000
4	Freight	LS	$500	30	$15,000
	*2013 dollars assuming force account construction / local wages			Subtotal	$261,000
				Contingency (20%)	$52,200
				Subtotal w/contingency	$313,200
				Design (8%)	$25,100
				Construction Management 15%	$47,000
				VSW EMT(8%)	$25,100
				Water Distribution Loop Upgrade Total	**$410,400**

Table 4-Upgrade Existing Watering Points Alternative

Watering Points Upgrade (10 ea)					
Item	Activity	Unit	Unit Price	Quantity	Cost
1	Materials+ Welding	LS	$10,000	10	$100,000
2	Lineman	LS	$500	10	$5,000
3	Electrician	FT	$1,000	10	$10,000
4	Plumbing assembly	LS	$500	10	$5,000
5	Electrical and Controls	LS	$8,000	1	$8,000
6	Core Crew (Supt, Plumber, Electrician)	LS	$4,000	10	$40,000
7	Local Force Account Crew	LS	$4,000	1	$4,000
8	Freight	LS	$1,500	10	$15,000
	*2013 dollars assuming force account construction / local wages			Subtotal	$187,000
				Contingency (20%)	$37,400
				Subtotal w/contingency	$224,400
				Design (8%)	$18,000
				Construction Management (15%)	$33,700
				VSW EMT(8%)	$18,000
				10 Watering Points Total	**$294,100**

Table 5-New Washeteria Water Storage Tank

20,000 GAL Washeteria Water Storage Tank					
Item	Activity	Unit	Unit Price	Quantity	Cost
1	Foundation Pad + Thermosyphons	LS	$20,000	1	$20,000
2	20,000 Gal Insulated Horizontal Tank on Skid	LS	$45,000	1	$45,000
3	Connecting Piping	FT	$150	50	$7,500
4	Plumbing and Heat Exchanger	LS	$16,000	1	$16,000
5	Electrical and Controls	LS	$8,000	1	$8,000
6	Core Crew (Supt, Plumber, Electrician)	LS	$18,000	1	$18,000
7	Local Force Account Crew	LS	$25,000	1	$25,000
8	Freight	LS	$25,000	1	$25,000
	*2013 dollars assuming force account construction / local wages			Subtotal	$164,500
				Contingency (20%)	$32,900
				Subtotal w/contingency	$197,400
				Design (8%)	$15,800
				Construction Management (15%)	$29,600
				VSW EMT(8%)	$15,800
				20,000 GAL Washeteria Water Storage Tank Total	**$258,600**

Table 6-New Washeteria with Heat Recovery

Washeteria (Includes Water Distribution Mechanical and Waste Heat Recovery)					
Item	Activity	Unit	Unit Price	Quantity	Cost
1	Triodetic Foundation and	LS	$134,000	1	$134,000
2	Floor + Steps	LS	$30,000	1	$30,000
3	Structure Shell (SIP)	LS	$25,000	1	$25,000
4	Metal Siding and Roofing	LS	$16,000	1	$16,000
5	Doors	LS	$4,500	1	$4,500
6	Bathroom Accessories	LS	$5,000	1	$5,000
7	Plumbing fixtures	LS	$10,000	1	$10,000
8	Finishes	LS	$10,000	1	$10,000
9	Laundry Equipment	LS	$58,000	1	$58,000
10	Windows	LS	$2,500	1	$2,500
11	Waste Heat Recovery	LS	$30,000	1	$30,000
12	Mechanical	LS	$67,000	1	$67,000
13	Electrical	LS	$56,000	1	$56,000
14	Boardwalk to building	FT	$300	100	$30,000
15	Core Crew (Supt, Plumber, Electrician)	LS	$102,000	1	$102,000
16	Local Force Account Crew	LS	$135,000	1	$135,000
17	Construction Equipment Rental	LS	$80,000	1	$80,000
18	Freight	LS	$115,000	1	$115,000
	*2013 dollars assuming force account construction / local wages			Subtotal	$910,000
				Contingency (20%)	$182,000
				Subtotal w/contingency	$1,092,000
				Design (8%)	$87,400
				Construction Management (15%)	$163,800
				VSW EMT(8%)	$87,400
				Washeteria Total	**$1,430,600**

5.4 SELECTED OPTIONS FOR WASTEWATER

The selected wastewater options consist of the following components:

Wastewater Collection

- Honey Bucket Dump Station

Wastewater Treatment

- Facultative Lagoon

These wastewater options are delineated in the flow chart below.

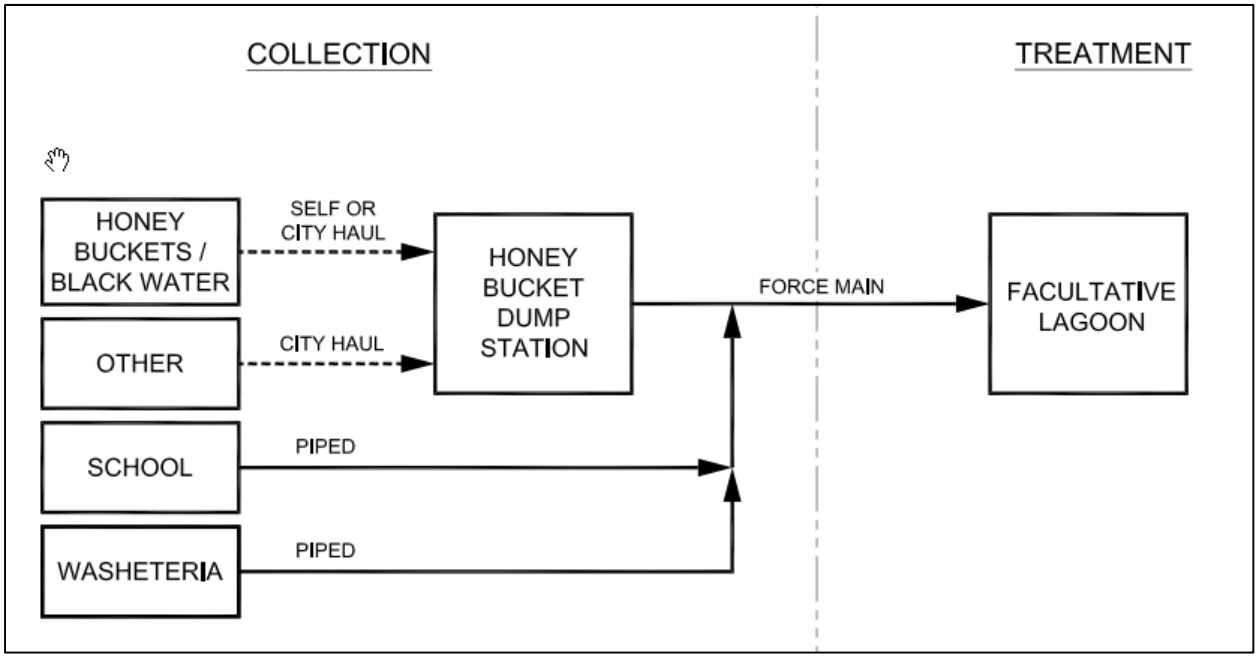

5.5 CONCEPTUAL COST ESTIMATES FOR WASTEWATER OPTIONS

Conceptual cost estimates for the selected wastewater options are shown in the tables on the next page.

Table 7-Wastewater Collection: Central Honey Bucket Dump Station Alternative

Honey Bucket Dump Station					
Item	Activity	Unit	Unit Price	Quantity	Cost
1	Materials for Dump Station, equipment, etc.	LS	$100,000	1	$100,000
2	Core Crew	LS	$28,000	1	$28,000
3	Local Force Account Crew	LS	$20,000	1	$20,000
4	Freight	LS	$30,000	1	$30,000
*2013 dollars assuming force account construction / local wages				Subtotal	$178,000
				Contingency (20%)	$35,600
				Subtotal w/contingency	$213,600
				Design (8%)	$17,100
	Construction Management (15%)				$32,000
				VSW EMT(8%)	$17,100
				Honey Bucket Dump Station Total	**$279,800**

Table 8- Wastewater Treatment: New Facultative Lagoon and Force Main

Sewage Lagoon and Force Main					
Item	Activity	Unit	Unit Price	Quantity	Cost
1	Materials for Lagoon and force Main, equipment, etc.	LS	$800,000	1	$800,000
2	Core Crew	LS	$250,000	1	$250,000
3	Local Force Account Crew	LS	$300,000	1	$300,000
4	Freight	LS	$110,000	1	$110,000
2013 dollars assuming force account/local wages				Subtotal	$1,460,000
				Contingency (20%)	$292,000
				Subtotal w/contingency	$1,752,000
				Design (8%)	$140,200
				Construction Management (15%)	$262,800
				VSW EMT(8%)	$140,200
				Sewage Lagoon and Force Main Total	**$2,295,200**

Figures

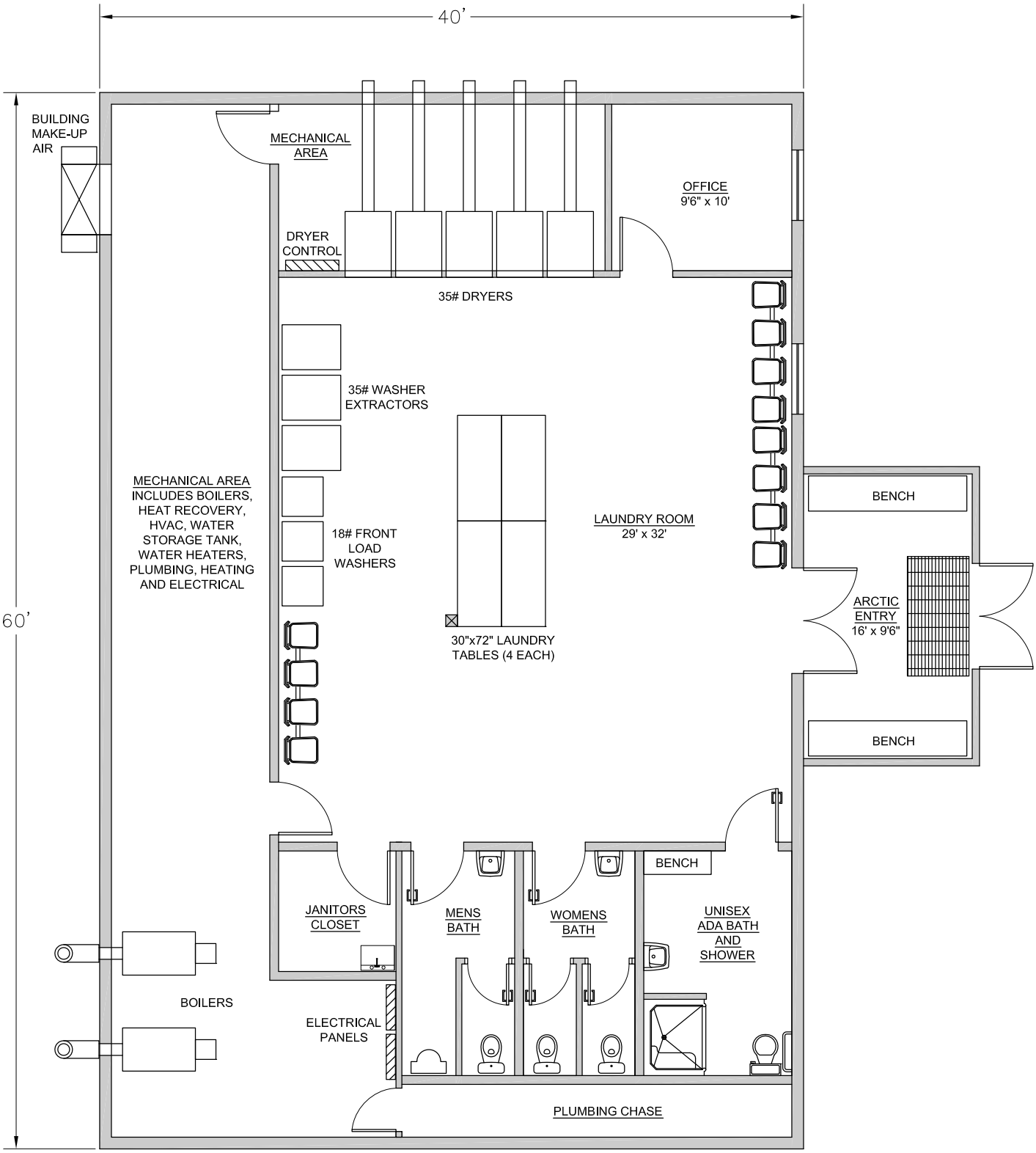

CE2 ENGINEERS, INC.
PO BOX 232946 ANCHORAGE, AK 99523 PH: 907-349-1010 FAX: 907-349-1015

Scale: 1/8" = 1'-0"
Date: OCT. 2012
Drawn: CM

PROPOSED WASHETERIA

CHEFORNAK, ALASKA

FIGURE 1

G:\ACAD\CHEFORNAK\W&S Study\Fig 1 Washeteria Conceptual Floor Plan.dwg, 10/19/2012 2:20:34 PM, cmerz, Adobe PDF

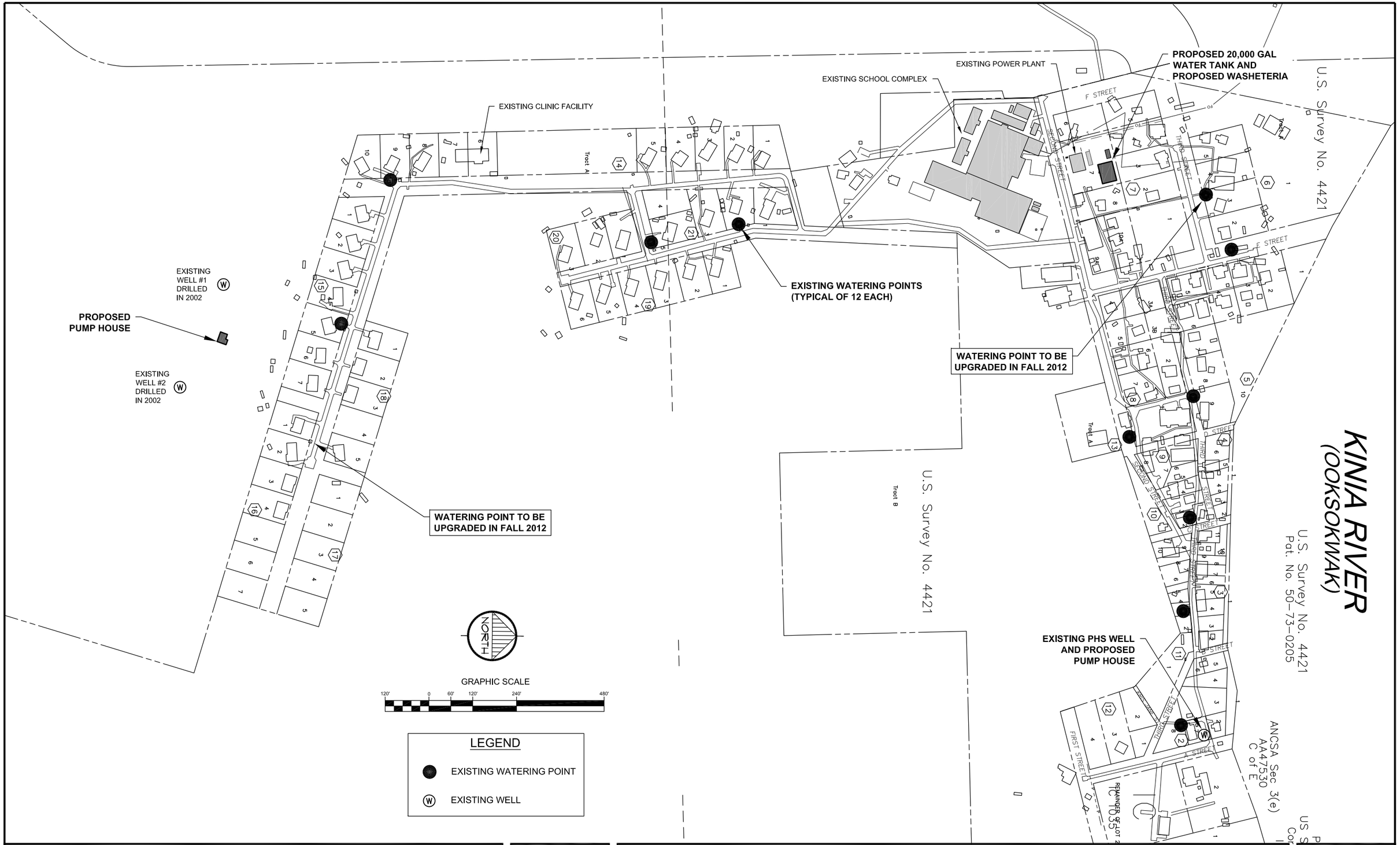

CE2 ENGINEERS, INC.
PO BOX 232946 ANCHORAGE, AK 99523 PH: 907-349-1010 FAX: 907-349-1015

Scale: AS SHOWN
Date: OCT. 2012
Drawn: CM

WATERING POINTS AND WELL LOCATIONS

CHEFORNAK, ALASKA

FIGURE 2

G:\ACAD\CHEFORNAK\2012 Water Study\Fig 2 Site Plan.dwg, 3/11/2013 12:30:32 PM, cmerz, Adobe PDF

PROCESS DESCRIPTION

(1) WATER SOURCE—PUMP HOUSE 1. WATER IS PUMPED FROM THE EXISTING PHS WELL THROUGH A ROUGHING FILTER, THEN A HYPOCHLORITE SOLUTION IS ADDED JUST BEFORE THE WELL WATER ENTERS INTO A 4,000-GALLON WATER STORAGE TANK. THE TANK SERVES AS A BUFFER FOR WATER ENTERING THE EXISTING WATER DISTRIBUTION SYSTEM. PRESSURE PUMP PP-1 MAINTAINS A CONSTANT 50-PSI PRESSURE IN THE WATER DISTRIBUTION LOOP. PUMPING IS COORDINATED THROUGH A RADIO LINK BACK TO THE WASHETERIA TO MANAGE PUMPING INTO THE LOOP THROUGH PUMP HOUSES 1 AND 2 TO EQUALIZE WATER DRAW FROM THE THREE WELL SOURCES. CIRCULATING PUMP CP-1 PROVIDES PART OF THE CIRCULATION OF THE WATER DISTRIBUTION LOOP. THE FIRST PRIORITY OF THE WATER PUMPING IS TO KEEP THE 20,000-GALLON WATER STORAGE TANK FILLED FOR SUPPLYING THE SCHOOL ULTRAFILTRATION / REVERSE OSMOSIS (UF/RO) WATER TREATMENT SYSTEM. THE WELL IS KEPT THAWED BY A CIRCULATION LOOP DOWN THE CASING, HEATED BY THE WATER LOOP THROUGH A HEAT EXCHANGER, AND BACKED UP BY OIL HEAT.

(2) WATER SOURCE—PUMP HOUSE 2. THIS SYSTEM IS VIRTUALLY IDENTICAL TO PUMP HOUSE 1 EXCEPT THAT THERE ARE TWO WELLS SERVING THIS PUMP HOUSE. WATER IS PUMPED FROM THE EXISTING TWO WELLS DRILLED IN 2002 THROUGH A ROUGHING FILTER, THEN A HYPOCHLORITE SOLUTION IS ADDED JUST BEFORE THE WELL WATER ENTERS INTO A 4,000 GALLON WATER STORAGE TANK. THE TANK SERVES AS A BUFFER FOR WATER ENTERING THE EXISTING WATER DISTRIBUTION SYSTEM. PRESSURE PUMP PP-2 MAINTAINS A CONSTANT 50-PSI PRESSURE IN THE WATER DISTRIBUTION LOOP. PUMPING IS COORDINATED THROUGH A RADIO LINK BACK TO THE WASHETERIA TO MANAGE PUMPING INTO THE LOOP THROUGH PUMP HOUSES 1 AND 2 TO EQUALIZE WATER DRAW FROM THE THREE WELL SOURCES. CIRCULATING PUMP CP-2 PROVIDES PART OF THE CIRCULATION OF THE WATER DISTRIBUTION LOOP. THE FIRST PRIORITY OF THE WATER PUMPING IS TO KEEP THE 20,000-GALLON WATER STORAGE TANK FILLED FOR SUPPLYING THE SCHOOL ULTRAFILTRATION / REVERSE OSMOSIS (UF/RO) WATER TREATMENT SYSTEM. THE WELLS ARE KEPT THAWED BY A CIRCULATION LOOP DOWN THE CASING, HEATED BY THE WATER LOOP THROUGH A HEAT EXCHANGER, AND BACKED UP BY OIL HEAT.

PROCESS DESCRIPTION CONT'D

(3) WATER DISTRIBUTION—TYPICAL WATERING POINT. THERE ARE TWELVE WATERING POINTS THAT WILL BE UPGRADED TO MORE ENERGY EFFICIENT AND ROBUST WATER DISPENSING SYSTEMS FOR PUBLIC USE. WATER FROM THESE WATERING POINTS WILL BE USED FOR NON-POTABLE USES, SUCH AS LAUNDRY, WASHING AND BATHING, AND STEAM BATHS. THE UPGRADED WATERING POINT ENCLOSURES WILL BE CONSTRUCTED FROM ALUMINUM PLATE, WITH 4-IN OF RIGID STYROFOAM INSIDE THE ENCLOSURES. HEATING WILL BE DONE BY TWO SYSTEMS OF THERMOSTATICALLY CONTROLED HEAT TRACE FOR SIMPLICITY OF OPERATION.

(4) WATER DISTRIBUTION AND HEATING—WASHETERIA. THE WATER DISTRIBUTION SYSTEM IS HEATED HERE BY RECOVERING WASTE HEAT FROM THE NEARBY DIESEL GENERATOR POWER PLANT, WITH OIL HEAT BACKUP FROM THE WASHETERIA MECHANICAL ROOM. AN OUTSIDE 20,000-GALLON WATER STORAGE TANK IS KEPT FILLED BY A CONTROL SYSTEM THAT OPENS MOTORIZED VALVE MV-1 TO LET IN APPROXIMATELY 10 GPM TO THIS TANK FROM THE WATER DISTRIBUTION SYSTEM. THE WELL PUMPS IN PUMP HOUSE 1 AND 2 ARE ULTIMATELY CONTROLLED FROM THE WASHETERIA TO LIMIT STRESS ON THE AQUIFERS, THUS MINIMIZING SALT INTRUSION. WHEN THE SCHOOL REQUIRES WATER FOR THEIR UF/RO TREATMENT SYSTEM, PRESSURE PUMP PP-3 SUPPLIES THE WATER FROM THIS TANK. THE 20,000-GALLON TANK PROVIDES A BUFFER FOR THE WELLS, AND ALSO SERVES AS A BACKUP IN CASE THE WELLS OR PUMP HOUSE ARE TAKEN DOWN FOR MAINTENANCE. HEATING FOR THE 20,000-GALLON INSULATED TANK IS ACCOMPLISHED BY UTILIZING RECOVERED WASTE HEAT FROM THE POWER PLANT, OR THE WASHETERIA BOILERS. WATER FROM THE DISTRIBUTION LOOP ALSO SUPPLIES WATER FOR THE WASHETERIA WASHERS, TOILETS, SHOWER, AND SINKS.

(5) WATER DISTRIBUTION—SCHOOL WATER SERVICE. THE SCHOOL UF/RO SYSTEM REQUIRES APPROXIMATELY 10 GPM WHEN IT IS TREATING WELL WATER TO POTABLE WATER STANDARDS. WHEN THIS SYSTEM IS OPERATING, A RADIO LINK TO THE WASHETERIA TELLS PRESSURE PUMP PP-3 TO SUPPLY WATER TO THE WATER DISTRIBUTION LOOP, THUS PREVENTING THE WELLS FROM BEING OVERSTRESSED. ONCE THE FLOW TO THE SCHOOL IS STOPPED, THEN THE 20,000-GALLON TANK TO THE WASHETERIA IS AGAIN FILLED BY THE WELLS.

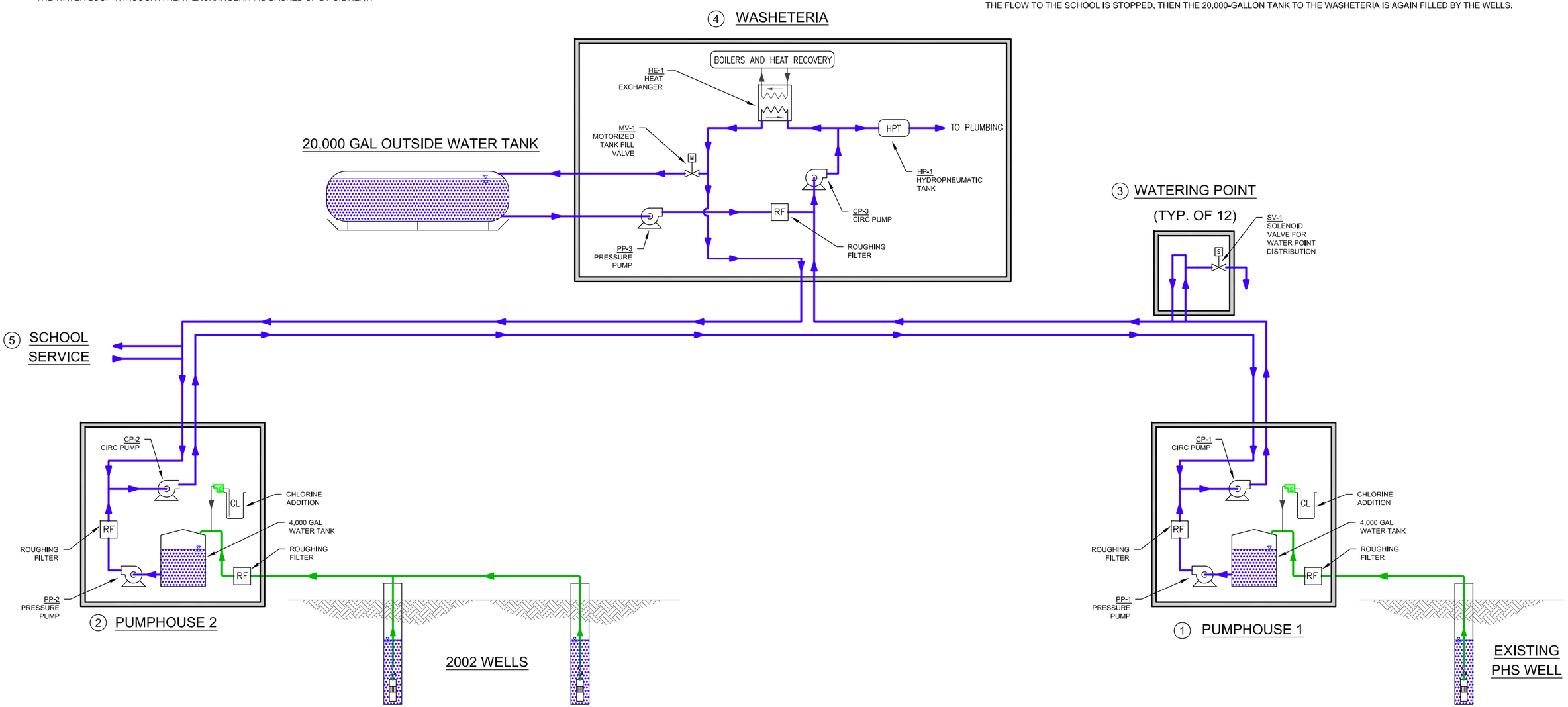

CE2 ENGINEERS, INC.
PO BOX 232946 ANCHORAGE, AK 99523 PH: 907-349-1010 FAX: 907-349-1015

Scale: NTS
Date: OCT. 2012
Drawn: CM

WATER SOURCE AND DISTRIBUTION SYSTEM

CHEFORNAK, ALASKA

FIGURE 3

G:\ACAD\CHEFORNAK\2012 Water Study\Fig 3 Water System Schematic.dwg, 3/11/2013 12:32:46 PM, cmerz, Adobe PDF

TOKEN SLIDE AND PUSH BUTTON

WATER DELIVERY HOSE

ELECTRICAL SERVICE

1-1/2" HIGH BOOST FLOW

WATER DELIVERY SOLENOID VALVE

3" HDPE WATER LOOP DISTRIBUTION PIPES INSIDE WATERING POINT

TOKEN SLIDE AND PUSH BUTTON

CE2 ENGINEERS, INC.
PO BOX 232946 ANCHORAGE, AK 99523 PH: 907-349-1010 FAX: 907-349-1015

Scale: NTS

Date: OCT. 2012

Drawn: CM

EXISTING WATERING POINT

CHEFORNAK, ALASKA

FIGURE 4

G:\ACAD\CHEFORNAK\2012 Water Study\Fig 4 Existing Watering Point.dwg, 3/11/2013 12:43:14 PM, cmerz, Adobe PDF

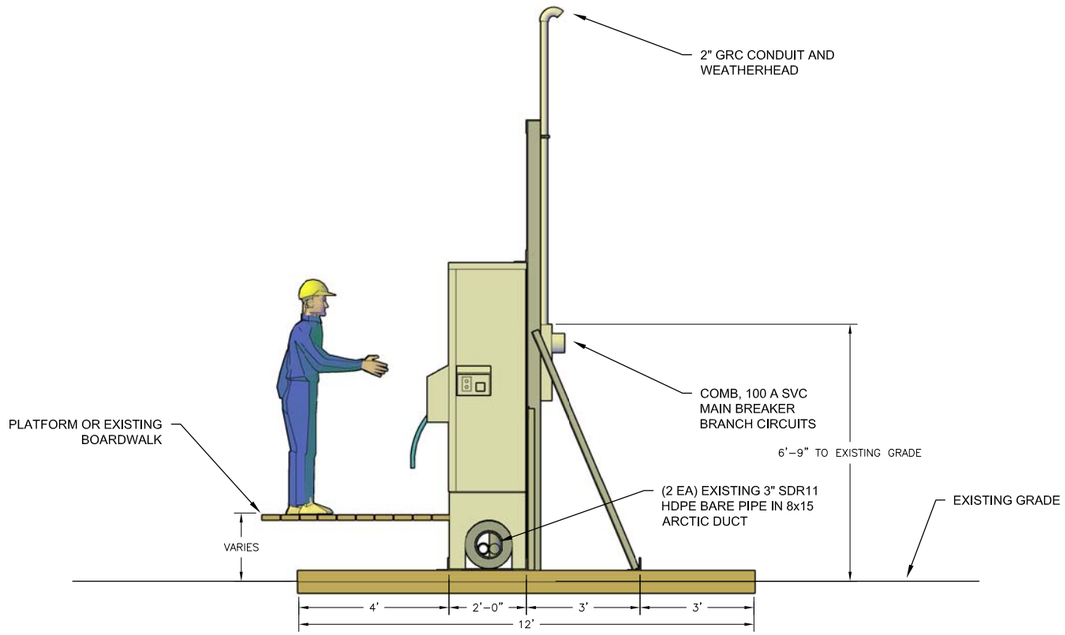

1 SIDE ELEVATION
SCALE: 1/4"=1'-0"

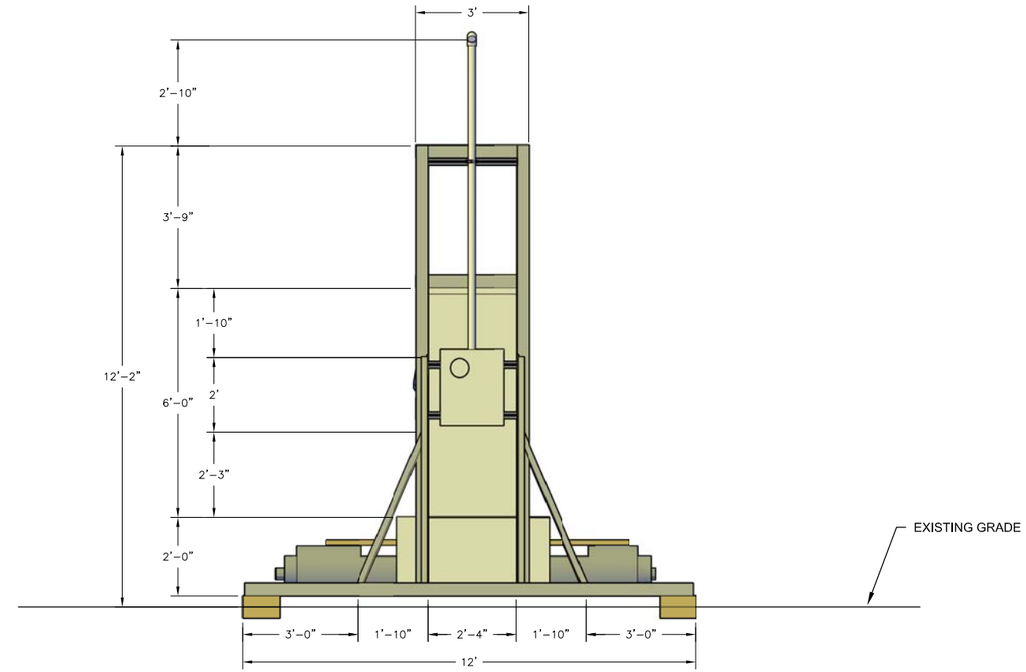

2 BACK ELEVATION
SCALE: 1/4"=1'-0"

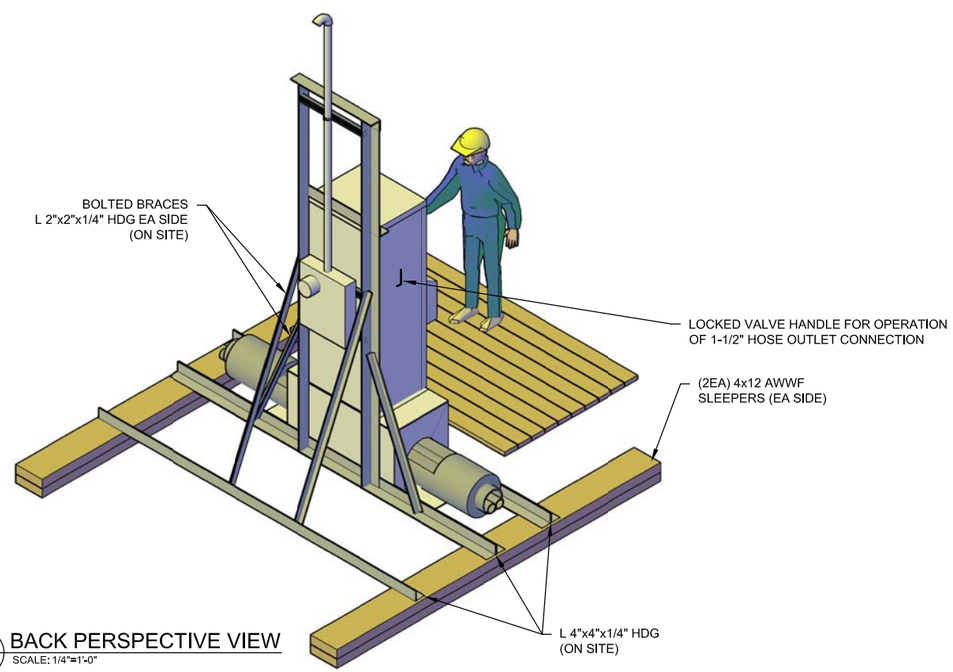

3 BACK PERSPECTIVE VIEW
SCALE: 1/4"=1'-0"

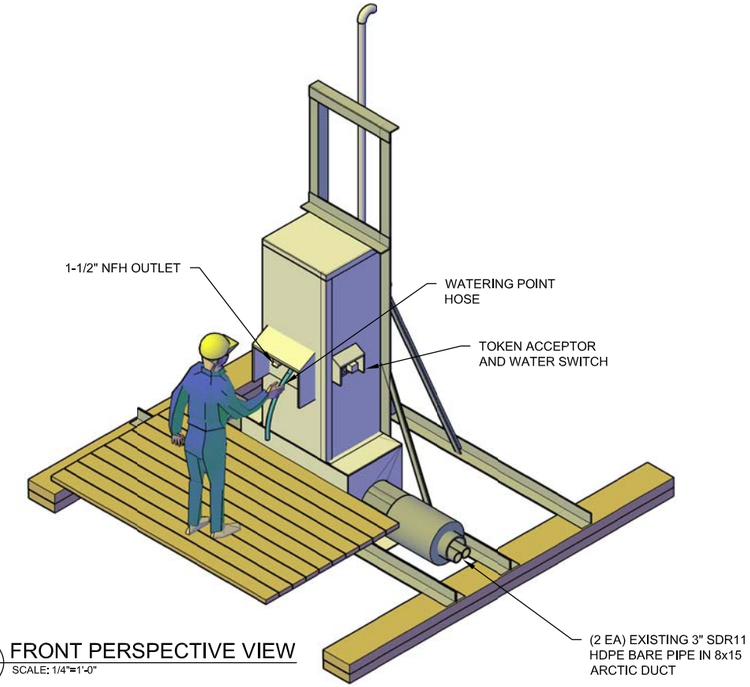

4 FRONT PERSPECTIVE VIEW
SCALE: 1/4"=1'-0"

CE2 ENGINEERS, INC.
PO BOX 232946 ANCHORAGE, AK 99523 PH: 907-349-1010 FAX: 907-349-1015

Scale: 1/4" = 1'-0"
Date: OCT. 2012
Drawn: CM

UPGRADED WATERING POINT

CHEFORNAK, ALASKA

FIGURE 5

G:\ACAD\CHEFORNAK\2012 Water Study\Fig 5 Upgraded Watering Point.dwg, 3/11/2013 12:36:38 PM, cmerz, Adobe PDF

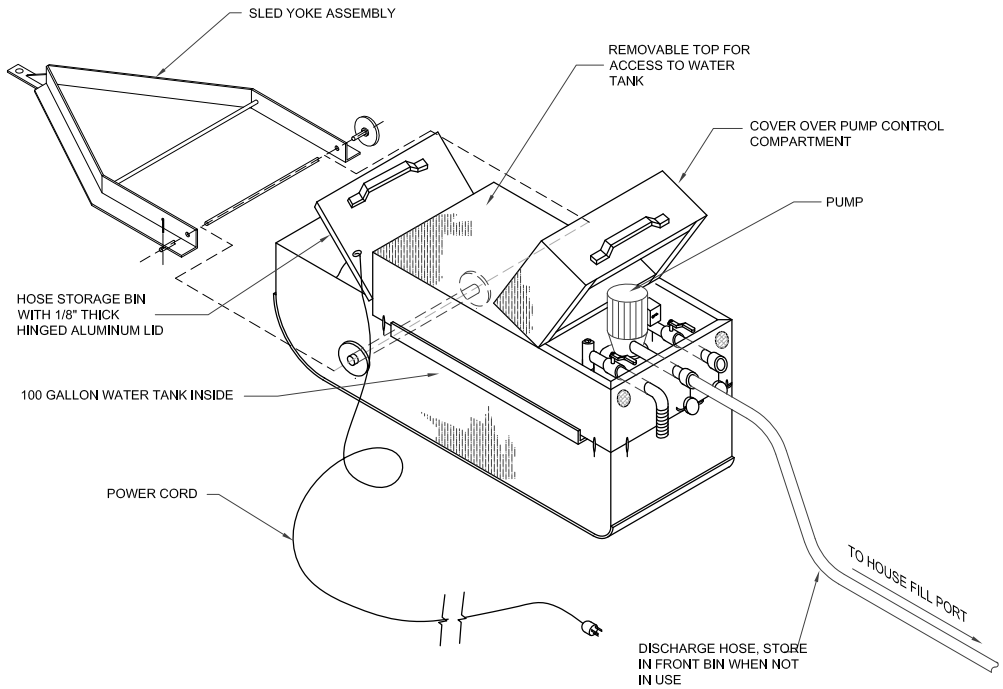

1 ALUMINUM WATER TANK ASSEMBLY IN SLED CONFIGURATION

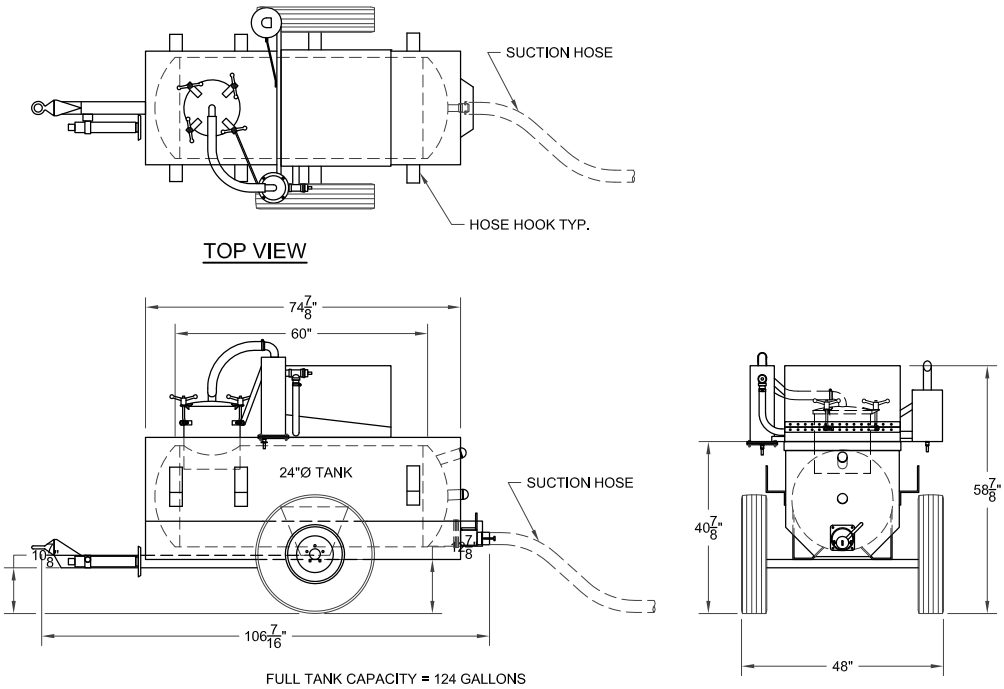

2 WASTEWATER VACUUM TRAILER

CE2 ENGINEERS, INC.
PO BOX 232946 ANCHORAGE, AK 99523 PH: 907-349-1010 FAX: 907-349-1015

Scale: NTS
Date: OCT. 2012
Drawn: CM

EXISTING FLUSH TANK AND HAUL COMPONENTS

CHEFORNAK, ALASKA

FIGURE 6

G:\ACAD\CHEFORNAK\2012 Water Study\Fig 6 Existing Flush Tank and Haul Components.dwg, 3/11/2013 12:35:23 PM, cmerz, Adobe PDF

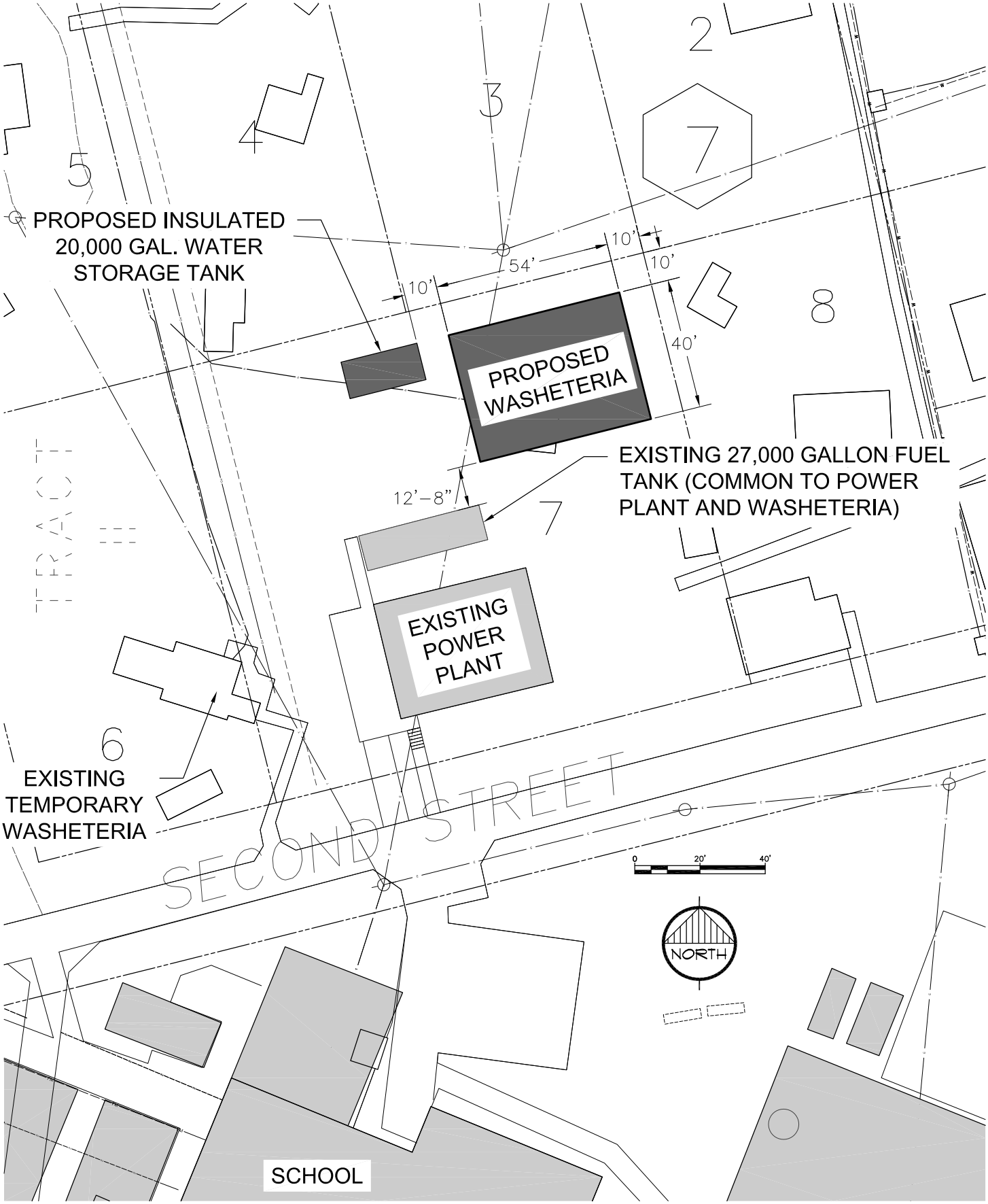

CE2 ENGINEERS, INC.
PO BOX 232946 ANCHORAGE, AK 99523 PH: 907-349-1010 FAX: 907-349-1015

Scale: 1" = 40'

Date: OCT. 2012

Drawn: CM

POWER PLANT SITE PLAN
LOT 7, BLOCK 7

CHEFORNAK, ALASKA

FIGURE 7

G:\ACAD\CHEFORNAK\2012 Water Study\Fig 7 Power Plant Site Plan.dwg, 3/11/2013 12:47:45 PM, cmerz, Adobe PDF

CE2 ENGINEERS, INC.
PO BOX 232946 ANCHORAGE, AK 99523 PH: 907-349-1010 FAX: 907-349-1015

Scale: 1/8" = 1'-0"

Date: FEB 2013

Drawn: CM

PROPOSED WASHETERIA FLOOR PLAN

CHEFORNAK, ALASKA

FIGURE 8

G:\ACAD\CHEFORNAK\2012 Water Study\Fig 8 Washeteria Conceptual Floor Plan.dwg, 3/11/2013 1:21:02 PM, cmerz, Adobe PDF

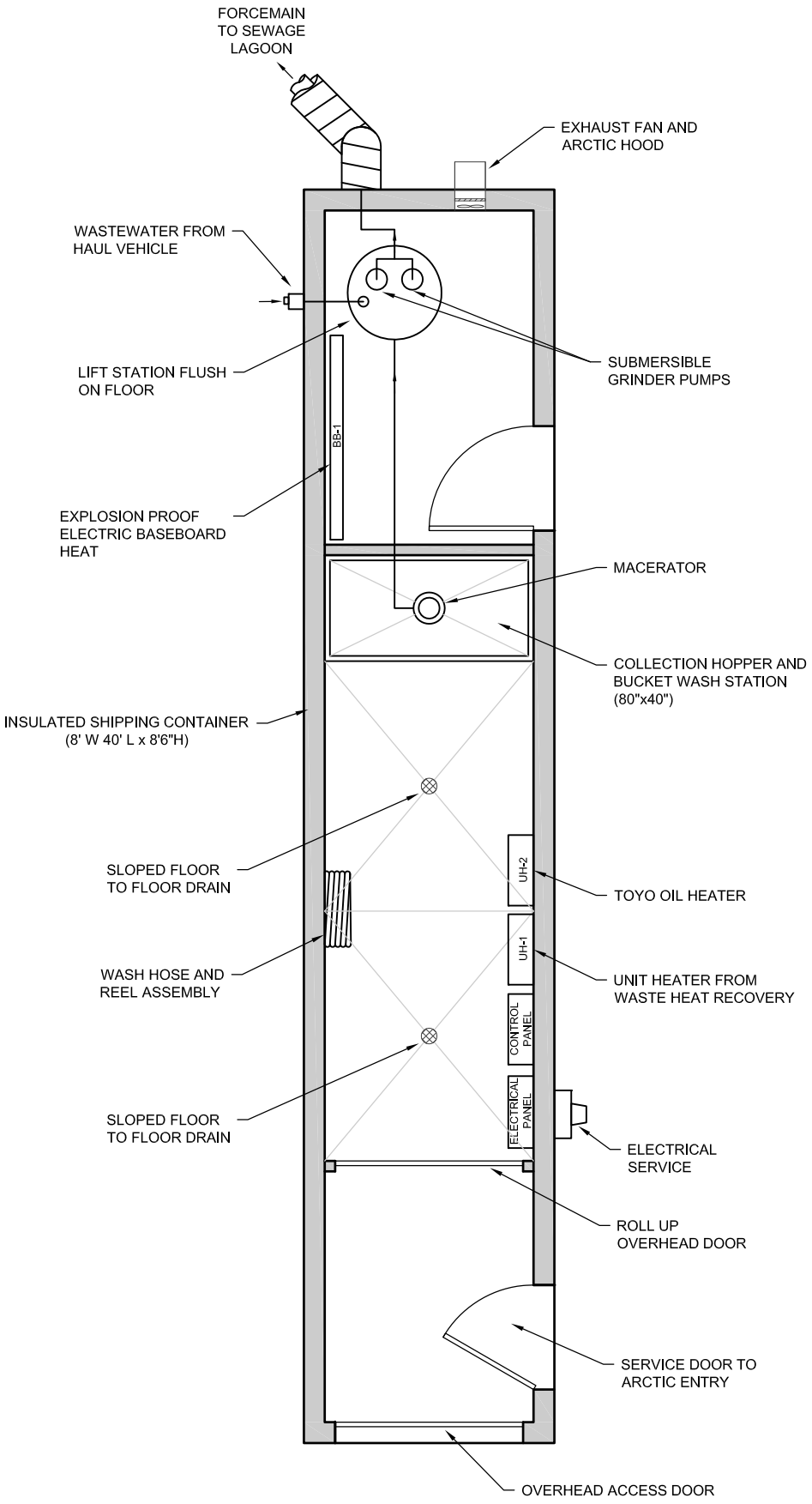

CE2 ENGINEERS, INC.
PO BOX 232946 ANCHORAGE, AK 99523 PH: 907-349-1010 FAX: 907-349-1015

Scale: N.T.S.
Date: OCT. 2012
Drawn: CM

PROPOSED COLLECTION STATION

CHEFORNAK, ALASKA

FIGURE 9

G:\ACAD\CHEFORNAK\2012 Water Study\Fig 9 Proposed Collection Station.dwg, 3/11/2013 12:51:29 PM, cmerz, Adobe PDF

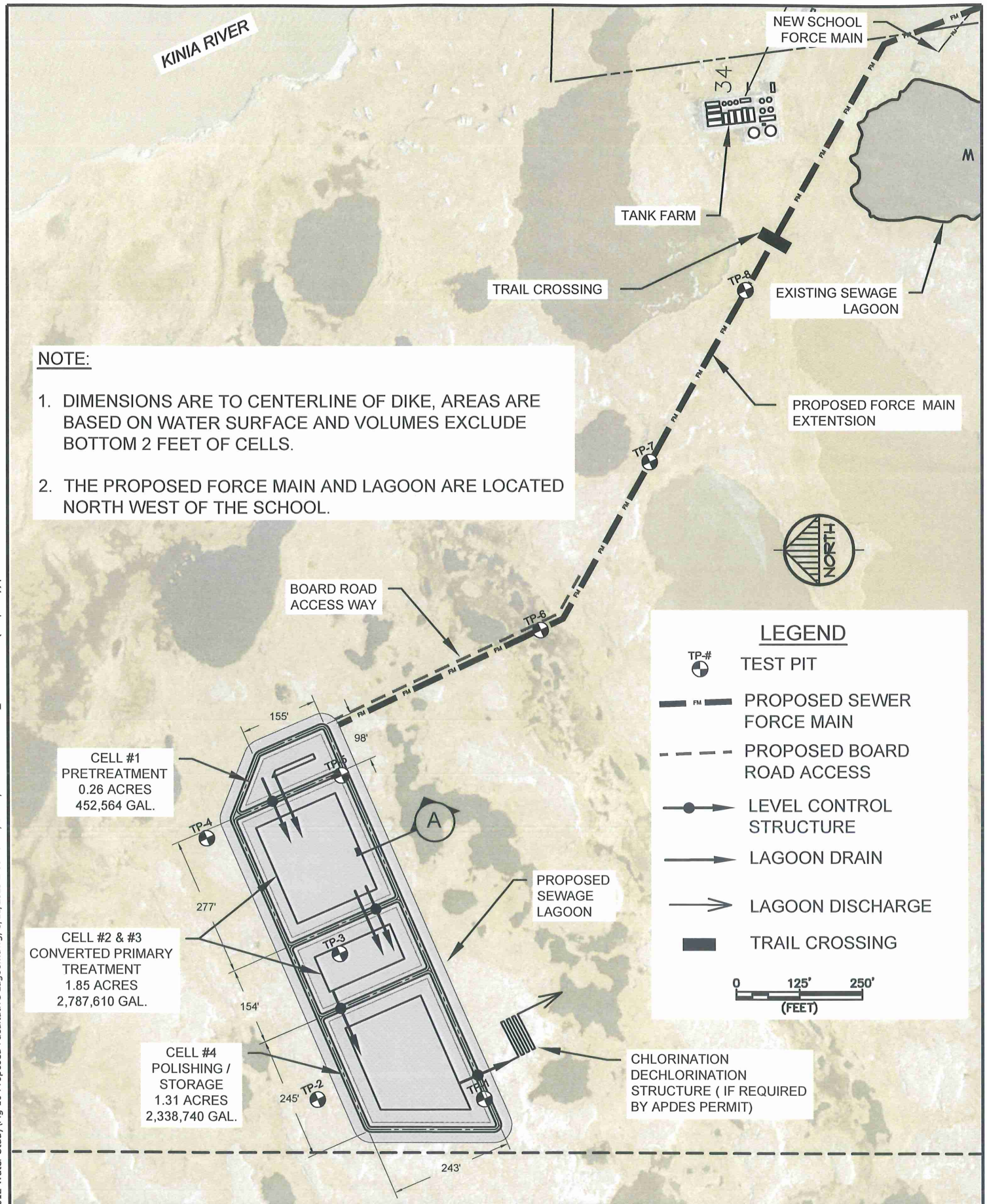

NOTE:

1. DIMENSIONS ARE TO CENTERLINE OF DIKE, AREAS ARE BASED ON WATER SURFACE AND VOLUMES EXCLUDE BOTTOM 2 FEET OF CELLS.
2. THE PROPOSED FORCE MAIN AND LAGOON ARE LOCATED NORTH WEST OF THE SCHOOL.

CE2 ENGINEERS, INC.
PO BOX 232948 ANCHORAGE, AK 99523 PH: 907-349-1010 FAX: 907-349-1015

Scale: NTS
Date: OCT. 2012
Drawn: CM

PROPOSED FACULTATIVE LAGOON

CHEFORNAK, ALASKA

FIGURE 10

G:\ACAD\CHEFORNAK\2012 Water Study\Fig 10 Proposed Facultative Lagoon.dwg, 3/11/2013 2:00:25 PM, cmerz, LANIER MP C2050_LD520C PCL 6 (temporary).pc3

Appendices

STATE OF ALASKA
DEPARTMENT OF NATURAL RESOURCES
DIVISION OF MINING, LAND & WATER
WATER WELL LOG

Drilling Started: 07 / 25 / 2002, Completed: 08 / 15 / 2002

City/Borough:	Subdivision:	BLOCK	LOT	Property Owner Name & Address:
Chefornak	Old Chefornak Airport	I	A	City of Chefornak, P.O. Box 29, Chefornak, AK 99561

Meridian Seward Township 1 N Range 86 W Section 30 , ____ 1/4 of ____ 1/4 of NE 1/4 of NW 1/4

BOREHOLE DATA: (from ground surface)

Material: Type, Color & wetness	Depth From	Depth To
Tundra (Frozen)	0	11'
Brown Clay	11'	16'
Lava Rock	16'	55'
Black Clay (Frozen)	55'	100'
Silt w/Wood Chips and Ice	100'	135'
Silt Dark Hard Packed	135'	175'
Fine Sand (Frozen)	175'	245'
Fine Sand (Not Frozen)	245'	255' 6"
Fine Sand (Water)	255' 6"	272'
Fine Sand (No Water)	272'	276' 6"
Blue Gray Pack Sand	276' 6"	302'

Drilling method: ☐ Air rotary, ☒ Cable tool ☐ Other _____

Well use: ☒ Public supply, ☐ Domestic, ☐ Other _____

Depth of hole: 276' 8" ft, Casing stickup: 3' ft

Casing type: Steel Thickness 0.322 inches

Casing diameter: 8 inches Casing depth 255' 6" ft

Liner type: NONE Diameter: ____ inches Depth: ____ ft

Note: .....

Static water (from top of casing): 19' ft on 08 / 14 / 2002

Pumping level & yield: 34' feet after 48 hours at 68 gpm

Recovery rate: _____ gpm, Method of testing: _____

Development method: surge & bail Duration: 18 hours

Well intake opening type: ☐ Open end ☐ Open hole , Other ☐

☒ Screened; Start: 255' 6" ft, Stopped 275' 3" ft

Screen type: 10 slot Slot/mesh size 0.010

☐ Perforated; Start: _____ ft, Stopped _____ ft

Start: _____ ft, Stopped _____ ft

Gravel packed ☐ Yes ☒ No From _____ ft to _____ ft

Note: 4-5' lengths of 0.010 screen with packer

Grout type: Bentonite Volume 200 pounds

Depth; from 10 ft, to 20 ft

Pump intake depth: _____ ft

Pump size _____ hp Brand name _____

Was well disinfected upon completion? ☒ Yes ☐ No

Method of disinfection: Sodium Hypochlorite Solution

Driller comments/ disclaimers: .....

Well No. 02-2 Chefornak

Well driller name: Roy Longbotham, Jr.

Company name: R & L Drilling & Leasing

Mailing address: 18957 Avenue 318

City: Visalia State: CA Zip 93292

Phone number : (_____) _____- _____

Drillers signature:

Date: _____/_____/_____

Alaska state law requires that a copy of this well log be forwarded to the Department of Natural Resources within 45 days (AK statutes 38.05.020, 38.05.035, 41.08.020, 46.15.020 and AK regulations 11 AAC 93.140). Faxes are acceptable.

Alaska DNR, Division of Mining, Land and Water,
550 W 7th Avenue, Suite 1020
Anchorage, AK 99501-3562

Phone (907)269-8639 and fax (907)269-8947

If the well is within city limits, the City of Anchorage requires that a copy of this well log be forwarded to the city within 60 days and another copy of this log be forwarded to the owner of the property, on which the well is located, within 30 days.

City Permit Number: _____

Date of Issue: _____/____/_____

Parcel Identification Number: _____-_____-_____

Is well located at approved permit location? Yes ☐ or No ☐

STATE OF ALASKA
DEPARTMENT OF NATURAL RESOURCES
DIVISION OF MINING, LAND & WATER
WATER WELL LOG

Drilling Started: 08 / 16 / 2002, Completed: 08 / 27 / 2002

City/Borough:	Subdivision:	BLOCK	LOT	Property Owner Name & Address:
Chefornak	Old Chefornak Airport	I	A	City of Chefornak, P.O. Box 29, Chefornak, AK 99561

Meridian Seward Township 1 N Range 86 W Section 30, ____ 1/4 of ____ 1/4 of NE 1/4 of NW 1/4

BOREHOLE DATA: (from ground surface) Depth

Material: Type, Color & wetness	From	To
Clay (frozen)	0	17'
Lava Rock	17'	20'
Frozen Gray Clay	20'	30'
Lava Rock	30'	57'
Frozen Black Clay	57'	130'
Frozen Gray Silt	130'	235'
Heaving Fine Sand	235'	237'
Fine Sand (Some Water)	237'	277' 8"

Drilling method: ☐ Air rotary, ☒ Cable tool ☐ Other ____

Well use: ☒ Public supply, ☐ Domestic, ☐ Other ____

Depth of hole: 277' 8" ft, Casing stickup: 3' ft

Casing type: Steel Thickness ____ inches

Casing diameter: 6 inches Casing depth 252' 3" ft

Liner type: NONE Diameter: ____ inches Depth: ____ ft

Note: ....

Static water (from top of casing): 25" ft on 08 / 27 / 2002

Pumping level & yield: 42' 8" feet after 24 hours at 57 gpm

Recovery rate: ____ gpm, Method of testing: ____

Development method: surge & bail Duration: 12 hours

Well intake opening type: ☐ Open end ☐ Open hole, Other ☐

☒ Screened; Start: 252' 3" ft, Stopped 277' 3" ft

Screen type: 10 slot Slot/mesh size 0.010

☐ Perforated; Start: ____ ft, Stopped ____ ft

Start: ____ ft, Stopped ____ ft

Gravel packed ☐ Yes ☒ No From ____ ft to ____ ft

Note: 5-5' lengths of 0.010 screen with packer

Grout type: Bentonite Volume 200 pounds

Depth; from 10 ft, to 20 ft

Pump intake depth: ____ ft

Pump size ____ hp Brand name ____

Was well disinfected upon completion? ☒ Yes ☐ No

Method of disinfection: Sodium Hypochlorite Solution

Driller comments/ disclaimers: ....

Well No. 02-3 Chefornak

Well driller name: Roy Longbotham, Jr.

Company name: R & L Drilling & Leasing

Mailing address: 18957 Avenue 318

City: Visalia State: CA Zip 93292

Phone number : (____) ____ - ____

Drillers signature:

Date: ____/____/____

Alaska state law requires that a copy of this well log be forwarded to the Department of Natural Resources within 45 days (AK statutes 38.05.020, 38.05.035, 41.08.020, 46.15.020 and AK regulations 11 AAC 93.140). Faxes are acceptable.

Alaska DNR, Division of Mining, Land and Water,
550 W 7th Avenue, Suite 1020
Anchorage, AK 99501-3562

Phone (907)269-8639 and fax (907)269-8947

If the well is within city limits, the City of Anchorage requires that a copy of this well log be forwarded to the city within 60 days and another copy of this log be forwarded to the owner of the property, on which the well is located, within 30 days.

City Permit Number: ____

Date of Issue: ____/____/____

Parcel Identification Number: ____-____-____

Is well located at approved permit location? Yes ☐ or No ☐

Chefornak Water Treatment Study

Well W02-3 Total Dissolved Solids (TDS) Chart

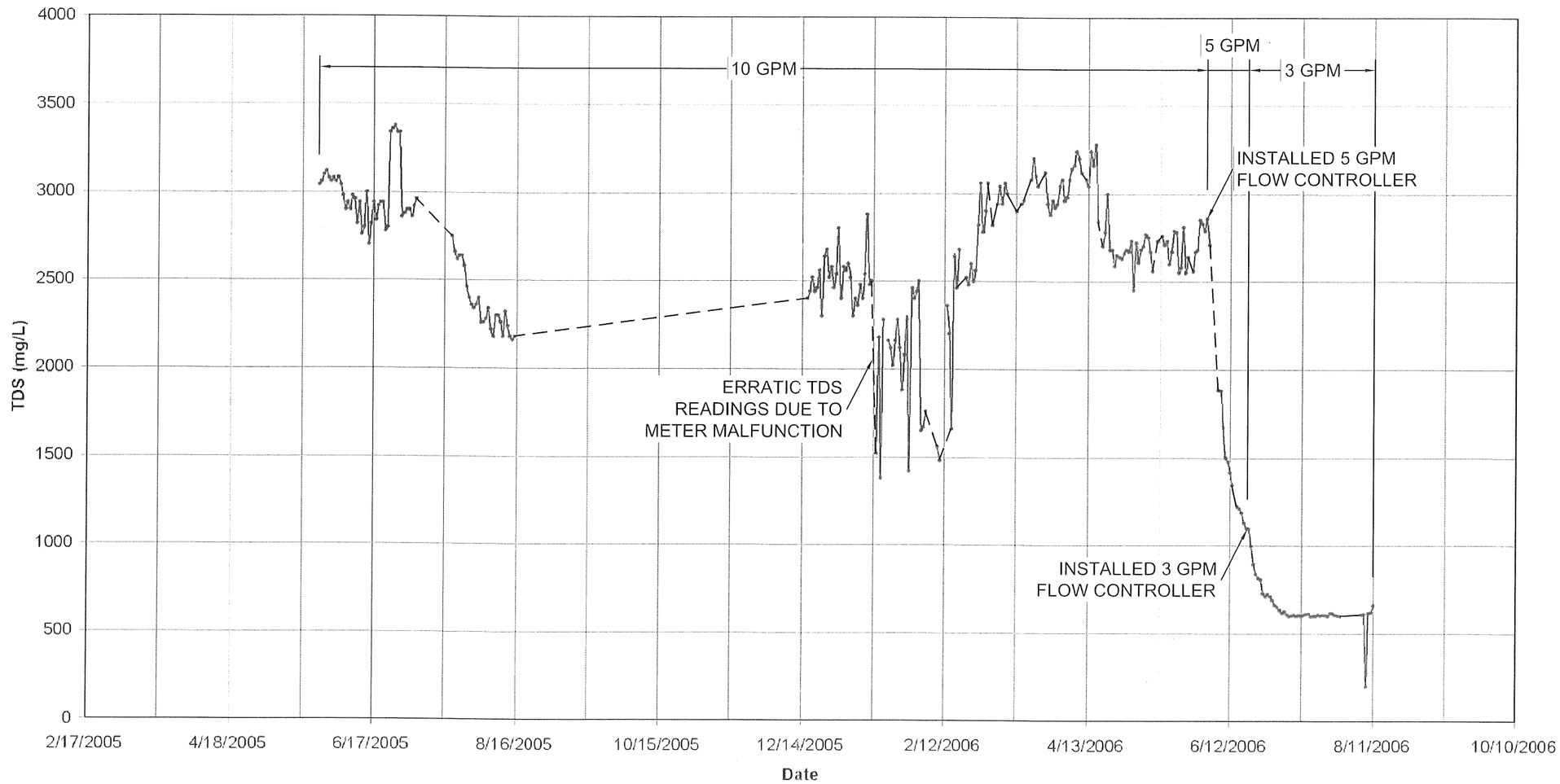

CE2 ENGINEERS, INC.

Scale: NTS

Date: APRIL 2007

Drawn: DWB

CHEFORNAK WATER TREATMENT STUDY

WELL W02-3 TOTAL DISSOLVED SOLIDS CHART

CHEFORNAK, ALASKA

FIGURE 1