CITY OF CHEFORNAK, ALASKA

WASHETERIA AND WATER TANK

IN COOPERATION WITH STATE OF ALASKA
VILLAGE SAFE WATER AND THE CITY OF
CHEFORNAK, ALASKA

65% DESIGN REVIEW

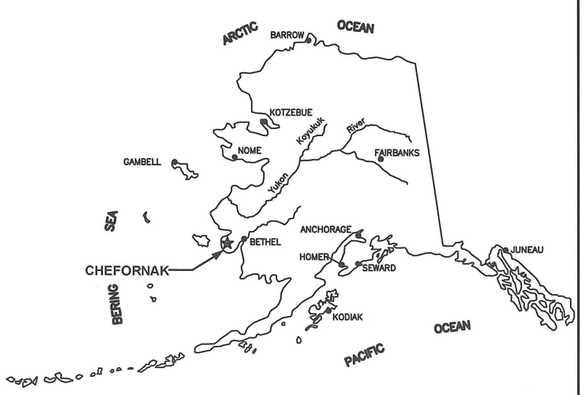

PROJECT LOCATION

Location Map

CE2 ENGINEERS, INC.
PO BOX 232946 ANCHORAGE, AK 99523 PH: 907-349-1010 FAX: 907-349-1015

STATE OF ALASKA 49TH
PAUL C. WEGNER
CE-10276
REGISTERED PROFESSIONAL ENGINEER

Consultant

RECORD DRAWING CERTIFICATE

THESE DRAWINGS REFLECT RECORDED INFORMATION OBTAINED DURING CONSTRUCTION.
INFORMATION PROVIDED HEREIN IS ACCURATE TO THE BEST OF MY KNOWLEDGE.

NAME DATE

Construction Foreman	–
FINAL DESIGN	(Date) –
ADEC APPROVAL	(Date)
Construction Period	(From) – (To) –
As-Builts	(Date)

SHEET INDEX

No.	Title
GENERAL	
G1	COVER SHEET AND SHEET INDEX
G2	VICINITY MAP
G2.1	PROJECT AREA
G3	SYSTEM SCHEMATIC AND DESIGN CRITERIA
G4	GENERAL NOTES AND LEGEND
G5	GEOTECHNICAL INFORMATION (PENDING)
CIVIL	
C1	SURVEY CONTROL
C2	PROJECT SITE PLAN
C3	PAD CONSTRUCTION
C4.1	WATER TANK PLAN, ELEVATIONS AND DETAILS
C4.2	WATER TANK DETAILS
C5.1	LIFT STATION DETAILS
C5.2	LIFT STATION TANK
C6.1	UTILIDOR / PIPE SUPPORT DETAILS
C6.2	FORCE MAIN PIPE DETAILS
C6.3	UTILIDOR DETAILS
C6.4	CONNECTION BOX DETAILS
C6.5	UTILIDOR PIPE ANCHORING DETAILS
ARCHITECTURAL	
A1.1	WASHETERIA FLOOR PLAN
A1.2	WASHETERIA ENLARGED FLOOR PLANS
A1.3	WASHETERIA ROOF PLAN
A2.1	WASHETERIA EXTERIOR ELEVATIONS
A3.1	WASHETERIA BUILDING SECTIONS
A3.2	WASHETERIA WALL SECTIONS
STRUCTURAL	
S0.1	STRUCTURAL NOTES
S1.1	WASHETERIA FOUNDATION PLAN
S2.1	WASHETERIA FLOOR FRAMING PLAN
S2.2	WASHETERIA RAMP / EXT. STAIR FRAMING PLAN
S3.1	WASHETERIA ROOF FRAMING PLAN
S4.1	WASHETERIA BUILDING SECTIONS
S4.2	WASHETERIA WALL SECTIONS
MECHANICAL	
M1.0	EQUIPMENT LIST AND LEGEND
M1.5	CONTROLS AND SEQUENCE OF OPERATION
M2.0	PLUMBING PLAN
M2.5	PLUMBING DIAGRAMS AND DETAILS
M3.0	MECHANICAL PLAN
M3.5	HVAC AND HEATING DETAILS
M3.6	BOILER ROOM DETAILS
M4.0	HEATING AND WATER SUPPLY DIAGRAM
ELECTRICAL	
E1.1	ELECTRICAL LEGEND AND GENERAL REQUIREMENTS
E2.1	ELECTRICAL SITE PLAN
E3.1	ELECTRICAL DIAGRAMS AND DETAILS

G:\ACAD\CHEFORNAK\2013 Washeteria and Water Tank\COVER.dwg, 10/15/2013 3:49:59 PM, cmerz, \\Ce2main\LANTER MP C2050\LD520C PCL6

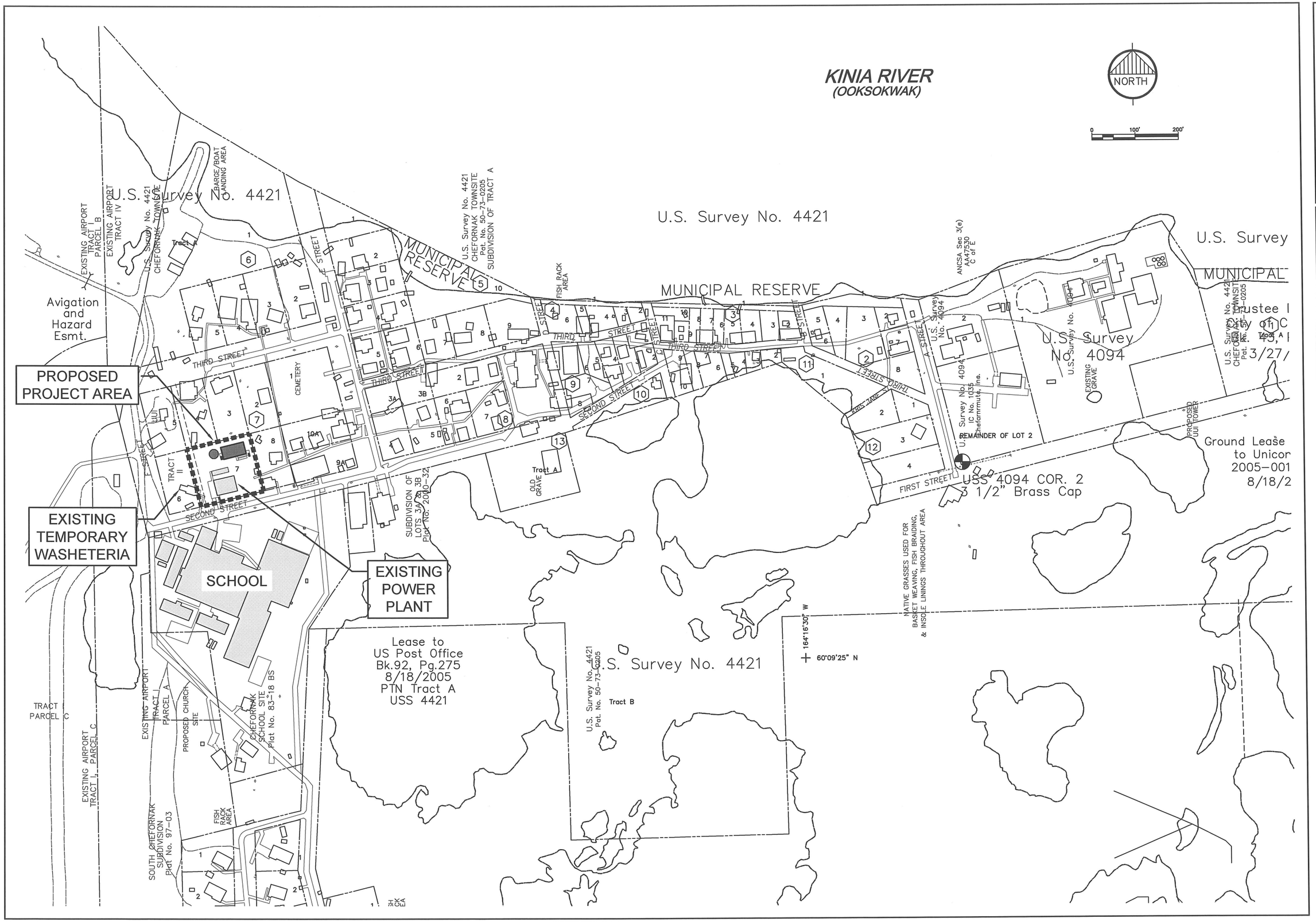

RECORD DRAWING CERTIFICATE

THESE DRAWINGS REFLECT RECORDED INFORMATION OBTAINED DURING CONSTRUCTION. INFORMATION PROVIDED HEREIN IS ACCURATE TO THE BEST OF MY KNOWLEDGE.

NAME DATE

SCALE: AS SHOWN

BAR IS ONE INCH ON ORIGINAL DRAWING

0 1"

IF NOT ONE INCH ON THIS SHEET, ADJUST SCALES ACCORDINGLY

CONSTRUCTION RECORD

FIELD BOOK

STAKING

FOREMAN

AS-BUILT

INSPECTOR

STATE OF ALASKA 49TH PAUL C. WEBNER CE-10276 REGISTERED PROFESSIONAL ENGINEER

WASHETERIA AND WATER TANK

VICINITY MAP

CHEFORNAK, ALASKA

CE2 ENGINEERS, INC.

PO BOX 232048 ANCHORAGE, AK 99523 PH: 907-349-1010 FAX: 907-349-1015

REVISION	BY	DATE

Project No. ____ Date OCT. 2013 Designed ____ CM Drawn ____ Approved PCW

Sheet No. G2

SHEET ____ OF ____

G:\ACAD\CHEFORNAK\2013 Washeteria and Water Tank\G2 Vicinity Map.dwg, 10/15/2013 1:33:25 PM, cmerz, \\ce2main\LANIER MP C2050/LD520C PCL 6

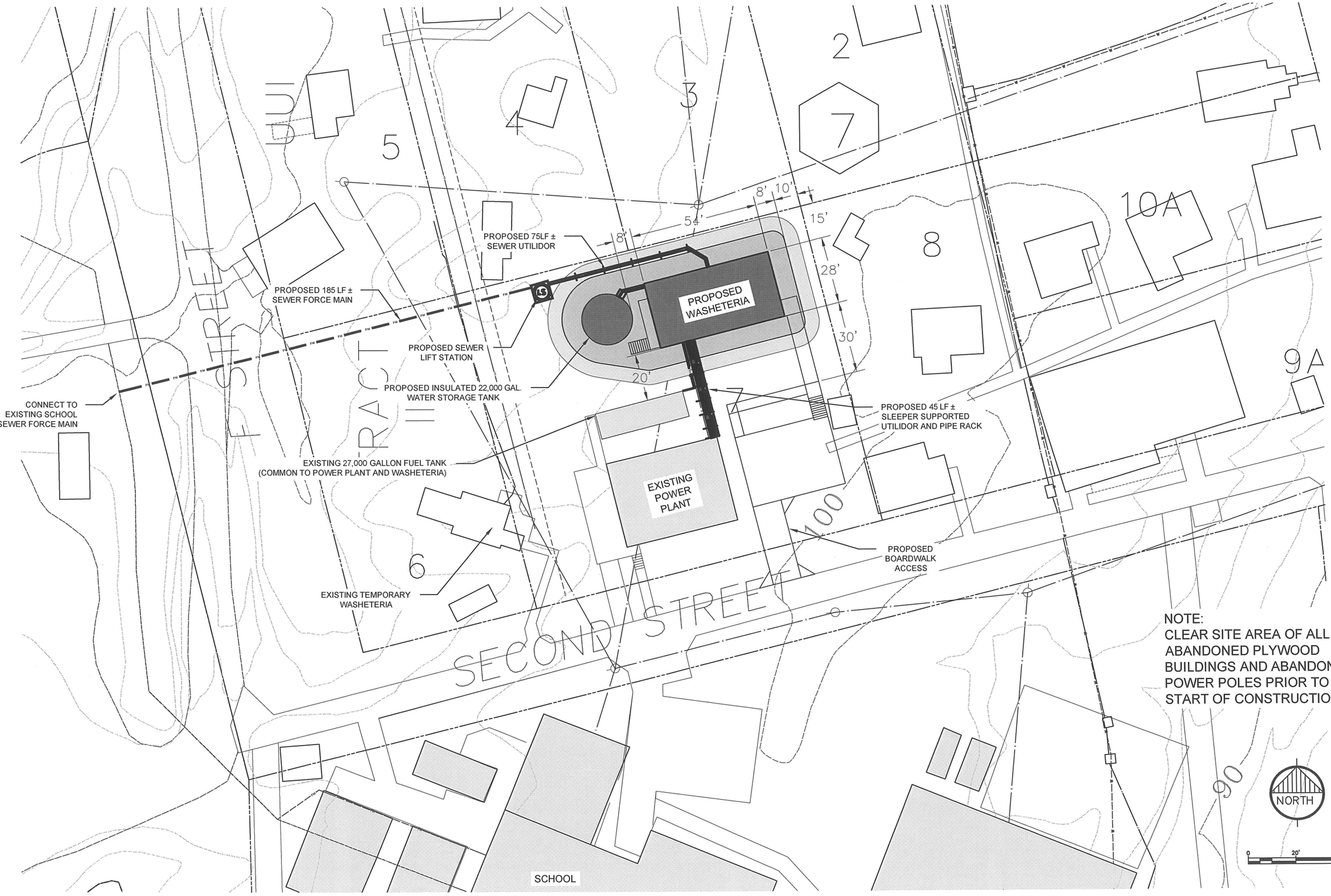

NOTE:
CLEAR SITE AREA OF ALL ABANDONED PLYWOOD BUILDINGS AND ABANDONED POWER POLES PRIOR TO START OF CONSTRUCTION

RECORD DRAWING CERTIFICATE

THESE DRAWINGS REFLECT RECORDED INFORMATION OBTAINED DURING CONSTRUCTION. INFORMATION PROVIDED HEREIN IS ACCURATE TO THE BEST OF MY KNOWLEDGE.

NAME DATE

SCALE: AS SHOWN

BAR IS ONE INCH ON ORIGINAL DRAWING 0 1"

IF NOT ONE INCH ON THIS SHEET, ADJUST SCALES ACCORDINGLY

CONSTRUCTION RECORD

FIELD BOOK
STAKING
FOREMAN
AS-BUILT
INSPECTOR

STATE OF ALASKA 49TH PAUL C. WEGNER CE-10276 REGISTERED PROFESSIONAL ENGINEER

10-15-2013

WASHETERIA AND WATER TANK

PROJECT AREA

CHEFORNAK, ALASKA

CE2 ENGINEERS, INC.

PO BOX 223246 ANCHORAGE, AK 99523 PH: 907-349-1010 FAX: 907-349-1015

REVISION	BY	DATE

Project No. ____
Date OCT. 2013
Designed PCW
Drawn CM
Approved PCW

Sheet No. G2.1

SHEET ____ OF ____

G:\ACAD\CHEFORNAK\2013 Washeteria and Water Tank\G2.1 PROJECT AREA.dwg, 10/15/2013 1:42:14 PM, cmerz, \\Ce2main\LANTER MP C2050/LD520C PCL 6

PROJECT SCOPE

- CONSTRUCT A 1,512 SQUARE FOOT WASHETERIA BUILDING, WHICH INCLUDES LAUNDRY FACILITIES, TWO RESTROOMS, OPERATOR'S OFFICE AND MECHANICAL ROOM.
- WASHETERIA IS TO BE INSTALLED ON A TRIODETIC FOUNDATION FRAME.
- WORK WILL INCLUDE ACCESS BOARDWALK AND A HANDICAP ACCESSIBLE RAMP.
- WATER WILL BE PROVIDED BY THE CITY WATERING POINTS WATER DISTRIBUTION LOOP.
- CONSTRUCTION OF WASHETERIA, WATER STORAGE TANK, LIFT STATION AND FORCE MAIN SCHEDULED TO BE CONSTRUCTED IN 2014.

PROJECT DESIGN CRITERIA

- DESIGN POPULATION (2033): 532 PERSONS
- AVERAGE WATER DEMAND (2033): 2,000 GAL/DAY
- FINISH FLOOR ABOVE FLOOD HIGH WATER ELEVATION.
- PUBLIC FACILITY DESIGNED TO BE ADA ACCESSIBLE, INCLUDING A RAMP INTO THE FACILITY.
- ADJACENT BOARDWALK WILL BE WIDENED TO PROVIDE WASHETERIA PARKING.
- POWER IS SUPPLIED FROM CITY'S 3-PHASE 480V PLANT POWER. IT WILL BE STEPPED DOWN TO 208/120V IN THE WASHETERIA.
- BOILERS AND RECOVERED WASTE HEAT FROM THE CITY POWER PLANT WILL PROVIDE HEAT.
- DRYERS WILL OPERATE BY HOT GLYCOL AND UTILIZE A TWO STAGE ENGINEERED COIL.
- FUEL FOR THE BOILERS IS SUPPLIED TO A DAY TANK SUPPLIED FROM THE POWER PLANT 27,000 GALLON TANK AND THE FUEL USE WILL BE METERED.
- A WASHETERIA EMERGENCY HEATER WILL BE POWERED BY A UPS (BATTERY BACK-UP SYSTEM).
- WATER WILL BE SUPPLIED FROM THE CITY WATER DISTRIBUTION SYSTEM TO THE WATERING POINTS.
- A HYDRONICALLY HEATED WATER HEATER WILL PROVIDE HOT WATER TO THE WASHERS, BATHROOMS, AND SHOWERS.
- WASHERS, DRYERS AND SHOWERS ARE TOKEN-OPERATED .
- WASTE WILL BE DISCHARGED BY GRAVITY FROM WASHETERIA TO PUMP STATION, THEN PUMPED THROUGH A FORCE MAIN TO THE EXISTING WASTEWATER LAGOON THRU SCHOOL FORCE MAIN.

LEGEND

S	SEWER LINE
FM	FORCE MAIN
E	ELECTRIC
W	WATER
DHW	DOMESTIC HOT WATER
DCW	DOMESTIC COLD WATER
G	GLYCOL

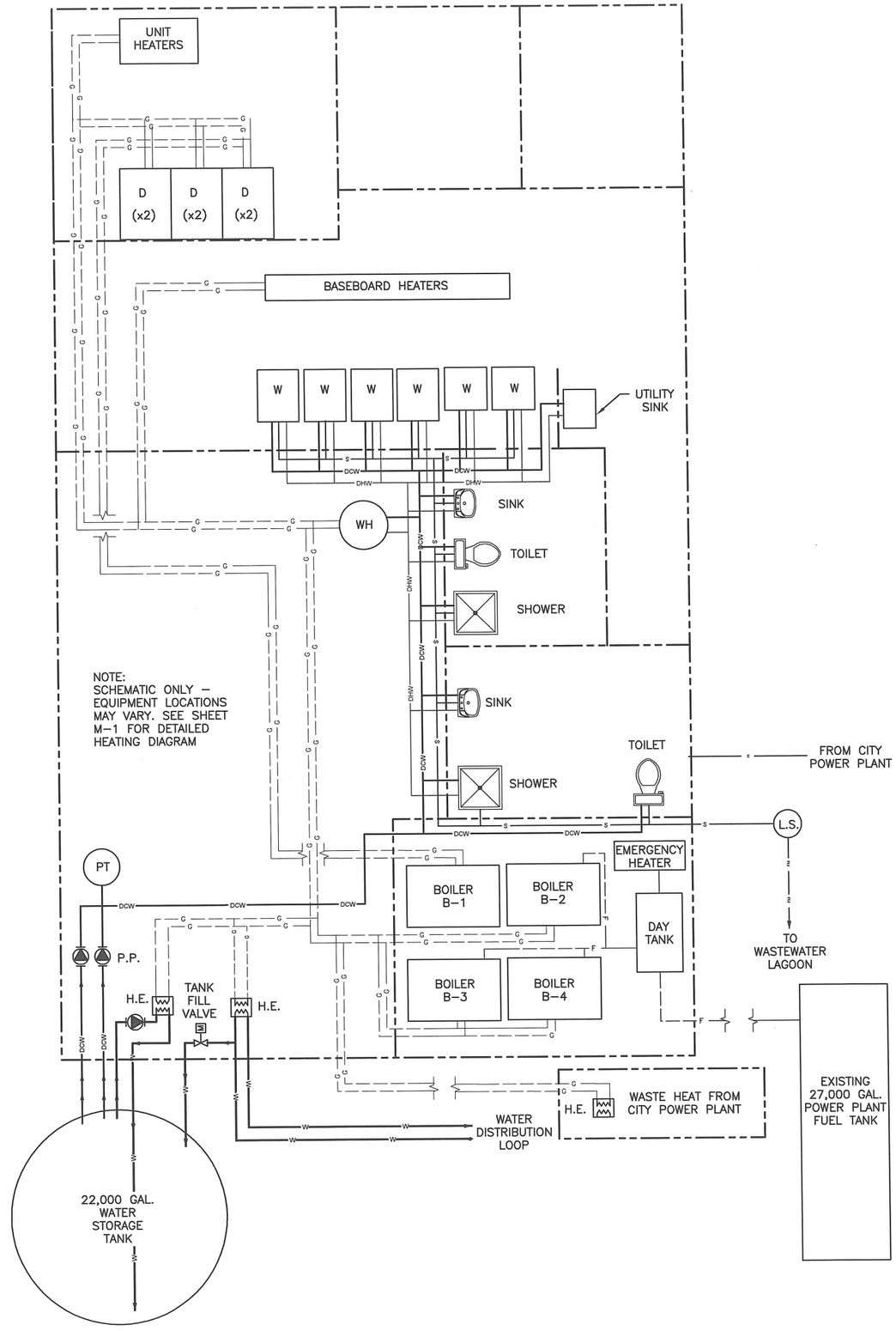

RECORD DRAWING CERTIFICATE

THESE DRAWINGS REFLECT RECORDED INFORMATION OBTAINED DURING CONSTRUCTION. INFORMATION PROVIDED HEREIN IS ACCURATE TO THE BEST OF MY KNOWLEDGE.

NAME DATE

SCALE: AS SHOWN

BAR IS ONE INCH ON ORIGINAL DRAWING 0 1"

IF NOT ONE INCH ON THIS SHEET, ADJUST SCALES ACCORDINGLY

CONSTRUCTION RECORD

FIELD BOOK
STAKING
FOREMAN
AS-BUILT
INSPECTOR

STATE OF ALASKA 49TH PAUL C. WEBNER CE-10276 REGISTERED PROFESSIONAL ENGINEER 10/15/2013

WASHETERIA AND WATER TANK

SYSTEM SCHEMATIC AND DESIGN CRITERIA

CHEFORNAK, ALASKA

CE2 ENGINEERS, INC.
PO BOX 222246 ANCHORAGE, AK 99523 PH: 907-349-1010 FAX: 907-349-1015

REVISION	BY	DATE

Project No. ____ Date OCT. 2013 Designed ____ Drawn ____ Approved PCW

Sheet No. G3

SHEET ____ OF ____

G:\ACAD\CHEFORNAK\2013 Washeteria and Water Tank\G3 Schematic and Design Criteria.dwg, 10/15/2013 1:44:07 PM, cmerz, \\Ce2main\LANIER MP C2050/LD520C PCL 6

GENERAL NOTES

1. ALL CONSTRUCTION SHALL BE DONE IN A SAFE WORKMANLIKE MANNER TO INDUSTRY STANDARDS AND IN CONFORMANCE WITH APPLICABLE LOCAL STATE AND FEDERAL CODES AND REGULATIONS. HIGH STANDARDS OF WORKMANSHIP SHOWING A SENSE OF PRIDE BY WORKMEN SHALL BE MAINTAINED. WORKERS SHALL BE PREPARED TO SIGN THEIR INDIVIDUAL WORK AS IF IT WAS THEIR OWN ARTWORK.
2. ALL MATERIALS SHALL MEET OR EXCEED THE MINIMUM QUALITY STANDARDS SPECIFIED IN THE DRAWINGS. ANY MATERIAL IN CONTACT WITH THE WELL WATER OR POTABLE WATER SHALL BE NSF 61 APPROVED. SOLDER CONTAINING LEAD SHALL NOT BE ALLOWED.
3. THE BASIS OF VERTICAL CONTROL IS THE SOUTH RIM AT THE TOP OF THE 6" WELL CASING FOR WELL WW-2, THE LOCATION OF WHICH IS SHOWN ON THE SURVEY CONTROL DIAGRAM TO THE RIGHT. THE ELEVATION OF THE TOP OF CASING IS 80.75 FT.
4. THE BASIS OF HORIZONTAL CONTROL IS THE RECORDED BEARING BETWEEN CORNERS C1 AND C2 OF U.S. SURVEY NO. 4421. THE BEARING IS S 0°00'00" E (DUE SOUTH) WITH A RECORDED DISTANCE OF 509.68 LF (MEAS. 509.35 LF). SEE THE SURVEY CONTROL DIAGRAM TO THE RIGHT.
5. EXISTING UTILITIES ARE SHOWN IN APPROXIMATE LOCATION TO THE BEST KNOWLEDGE OF THE ENGINEER AT THE TIME OF DESIGN. UTILITY RECORDS MAY NOT BE COMPLETELY ACCURATE. THE PROJECT SUPERINTENDENT SHALL VERIFY HORIZONTAL AND VERTICAL LOCATION OF UTILITIES WITHIN EACH CONSTRUCTION REACH PRIOR TO CONSTRUCTION. ALL UTILITIES ARE ABOVE GROUND UNLESS OTHERWISE NOTED.

WATER AND SEWER -	CHEFORNAK WATER AND SEWER UTILITY	(907) 867-8301
ELECTRIC -	NATERKAQ LIGHT PLANT	(907) 867-8213
TELEPHONE -	UNITED UTILITIES, INC.	(800) 478-2020

6. THE PROJECT SUPERINTENDENT SHALL BE RESPONSIBLE FOR MAINTAINING A CLEAN SET OF AS-BUILT "RED LINE" RECORD DRAWINGS SHOWING LOCATION AND SWING TIES TO ALL BURIED SYSTEM COMPONENTS. ALL ELEVATIONS SHALL BE MARKED ASB (AS-BUILT) OR F.C. (FIELD CHANGED) WITH THE CORRECT VALUE INSERTED. DRAWINGS SHALL BE KEPT CURRENT IN RED PENCIL AND UPDATED DAILY IN A NEAT AND LEGIBLE FASHION. A COPY OF THE AS-BUILT DRAWINGS SHALL BE SUBMITTED TO THE CITY OF CHEFORNAK AND THE VILLAGE SAFE WATER PROJECT ENGINEER.
7. GENERAL RESTORATION - THE AREAS IMPACTED BY CONSTRUCTION SHALL BE RETURNED TO PRECONSTRUCTION CONDITION OR BETTER. CONSTRUCTION DEBRIS SHALL BE REMOVED FROM THE AREA AND DISPOSED OF IN A PROPER MANNER. DUE CARE AND CAUTION SHALL BE TAKEN TO AVOID DISTURBING PERSONAL PROPERTY.
8. CONSTRUCTION IN SENSITIVE AREAS - TIMBER MATS OR PADS SHALL BE USED TO PROTECT VEGETATIVE COVER DURING CONSTRUCTION. ANY DAMAGE CAUSED BY CONSTRUCTION ACTIVITIES SHALL BE REPAIRED OR RESEEDED AS NECESSARY TO RETURN THE AREAS AFFECTED BY CONSTRUCTION TO ITS PRECONSTRUCTION STATE.
9. THE CONSTRUCTION SITE SHALL BE ADEQUATELY PROTECTED, RESTRICTED AND BARRICADED IN THE BEST PUBLIC INTERESTS OF HEALTH, SAFETY AND WELFARE, WITH VISIBLE AND STABLE BARRIERS, UNDERSTANDABLE, LARGE-PRINT WARNING SIGNS, AND OTHER PRECAUTIONARY EQUIPMENT AND MEASURES AS REQUIRED. ALL SAFETY MEASURES SHALL BE IN CONFORMANCE WITH APPLICABLE STATE OF ALASKA DOT AND OSHA SAFETY REQUIREMENTS.
10. EXISTING BOARDWALK SHALL BE REMOVED ONLY WHERE INDICATED ON THE PLANS AND IN ALL AREAS WHERE THE EXISTING BOARDWALK CONFLICTS WITH THE PROPOSED BOARDWALK ALIGNMENT. REMOVED BOARDWALK MATERIAL WITH ANY SALVAGE VALUE SHALL BE CLEANED OF FASTENERS (NAILS, SCREWS, PLATES, ETC.) AND NEATLY STACKED AT A LOCATION DESIGNATED BY THE CITY. PROVIDE STICKERS BETWEEN EVERY THIRD ROW IN THE STACK. EXISTING BOARDWALK MATERIAL WITH NO SALVAGE VALUE SHALL BE DISPOSED OF AT THE LANDFILL.

DESIGN CRITERIA:

WIND:	110 MPH - EXPOSURE C
SNOW LOAD:	30 PSF
SEISMIC DESIGN:	ZONE 1
BOARDWALK MOVABLE LOAD	7,000 LBS. PER WHEEL
BOARDWALK MOVING LOAD	2,000 LBS. PER WHEEL
DESIGN TEMPERATURE:	13,000 HEATING DEGREE DAYS
LOOP WATER TEMPERATURE	40°F ± 2°F
HEATING LOADS:	
BUILDING	50,000 Btu-HR
DOMESTIC WATER	50,000 Btu-HR
DRYERS	(4) @ 35,000 Btu-HR
WASHERS	(SEE DOMESTIC WATER)
AIR CHANGES	2,000 LBS. PER WHEEL

WATERLINES:

1. TESTING - ALL TESTING SHALL BE IN CONFORMANCE WITH THE FOLLOWING REQUIREMENTS.
   A. PLUMBING TESTING - PERFORM AN AIR TEST OF WATERLINES. ALL POTABLE WATER PIPING MUST BE PRESSURIZED TO 90 PSI AND LEFT FOR 1 HOUR. AFTER THE INITIAL STABILIZATION PERIOD WITH NO LOSS IN PRESSURE.
   B. ALL TESTS SHALL BE WITNESSED BY A REPRESENTATIVE DESIGNATED BY THE OWNER (CITY OF CHEFORNAK). UPON SUCCESSFUL COMPLETION OF A TEST THE RESULTS OF THE TEST SHALL BE DOCUMENTED ON A TEST FORM AND ACKNOWLEDGED BY SIGNATURE OF THE OWNER'S REPRESENTATIVE WITNESSING THE TEST AND BY THE CONTRACTOR. THE CONTRACTOR'S RED LINED AS-BUILT DRAWINGS SHALL ALSO NOTE, FOR EACH SEGMENT OF THE SYSTEM TESTED, THE TIME AND DATE OF THE TEST AND THE NAME OF THE OWNER'S WITNESS.
   C. THE CONSTRUCTION MANAGER WILL SUBMIT A QA/QC MANUAL OF ALL TESTING FOR REVIEW.
2. WATER TRANSMISSION PIPING SHALL BE BUTT FUSED, HDPE SDR 11 (PE 3408), ROUTED THROUGH AN INSULATED ARCTIC PIPE DUCT. THE DUCT SHALL HAVE A 4"Ø HDPE, SDR 17 CORE PIPE, 3" MINIMUM OF 3-4 LB/CF POLYURETHANE FOAM AND AN 12"ØX16 GAUGE CORRUGATED ALUMINUM JACKET.

BOARDWALK:

1. ALL BOARDWALK MATERIALS SHALL BE AS SPECIFIED IN THE DRAWINGS AND MEET THE FOLLOWING REQUIREMENTS:
   A. LUMBER: HEMLOCK AND DOUGLAS FIR (HEM-FIR) GRADE #2 OR BETTER. ALL SIZES ARE GIVEN IN NOMINAL DIMENSIONS (I.E., 4X12 WILL MEASURE 3 1/2" THICK BY 11 1/2" WIDE).
   B. WOOD TREATMENT: ALL WOOD MATERIALS USED SHALL BE TREATED WITH THE WOOD PRESERVATIVE CROMATED COPPER ARSENATE (CCA) AT THE FOLLOWING CONCENTRATIONS:
      "SOIL CONTACT" (INCLUDES ALL SLEEPERS) - 0.6 POUNDS PER CUBIC FOOT
      ABOVE GROUND (>6" ABOVE GROUND) - 0.4 POUNDS PER CUBIC FOOT
   C. HARDWARE AND FASTENERS: ALL STRUCTURAL STEEL PLATES, SHAPES, BARS AND ASSEMBLIES SHALL, AFTER THE STEEL HAS BEEN THOROUGHLY CLEANED OF RUST AND SCALE, BE GALVANIZED IN ACCORDANCE WITH THE REQUIREMENTS OF ASTM A 123. BOLTS, NUTS AND SIMILAR THREADED FASTENERS SHALL BE GALVANIZED IN ACCORDANCE WITH THE REQUIREMENTS OF A 153. FIELD REPAIRS TO GALVANIZING SHALL BE MADE USING "GALVINOX", "GALVO-WELD" OR EQUAL.

GENERAL STRUCTURAL NOTES

1. UNLESS NOTED OTHERWISE, ALL CONSTRUCTION SHALL CONFORM TO AASHTO STANDARD SPECIFICATIONS FOR HIGHWAY BRIDGES. IN ADDITION TO DEAD LOADS, THE BOARDWALK WAS DESIGNED FOR THE FOLLOWING LIVE AND ENVIRONMENTAL LOADS:

Design Wind Speed	135 m.p.h. (3 Second Gust)
Design Snow Load	40 p.s.f.
Seismic Design	Site Class D, S_{ds} = 0.126, S_{ds}=0.076
Live Load (Vehicle)	1500 lb. ATV or Snowmobile with 2000 lb. single axle "120 gal. water" trailer

2. BOARDWALK FOUNDATION
   A FOUNDATION INVESTIGATION WAS PREPARED FOR A PREVIOUS PROJECT BY DUANE MILLER AND ASSOCIATES. SOILS IN THE AREA GENERALLY CONSIST OF A PUMICE BOLDER MATRIX WITH A THIN ORGANIC MAT OVERLAYING SILT. MARGINAL TEMPERATURE PERMAFROST AS WELL AS THAWED SOIL CONDITIONS EXIST IN THE PROJECT AREA.
3. LUMBER SHALL BE HEM-FIR, GRADE NO. 2 OR BETTER. ALL WOOD MEMBERS SHALL BE TREATED WITH THE WOOD PRESERVATIVE CCA, CROMATED COPPER ARSENATE, WITH THE FOLLOWING CONCENTRATIONS:
   Soil Contact - 0.6 pounds per cubic foot
   Above Grade - 0.4 pounds per cubic foot
4. STEEL HARDWARE AND FASTENERS, INCLUDING STRUCTURAL PLATES, SHAPES, BARS, AND ASSEMBLIES, SHALL BE GALVANIZED IN ACCORDANCE WITH THE REQUIREMENTS OF ASTM A-123. BOLTS, NUTS AND SIMILAR THREADED FASTENERS SHALL BE GALVANIZED IN ACCORDANCE WITH ASTM A-153. SURFACES SHALL BE THOROUGHLY CLEANED OF RUST AND SCALE PRIOR TO GALVANIZING. FIELD REPAIRS TO GALVANIZING SHALL BE MADE USING "GALVINOX", GALVO-WELD", OR EQUAL.

PIPING (GENERAL):

1. ALL PIPING AND FITTINGS SHALL BE NSF-61 COMPLIANT WHERE SUCH PIPING AND FITTINGS ARE IN CONTACT WITH RAW OR POTABLE WATER IN THE WATER TREATMENT OR DISTRIBUTION PROCESS.
2. ALL PIPING SHALL BE LEAD FREE.
3. ALL PLUMBING USING SOLDERED JOINTS SHALL USE A SOLDER CERTIFIED TO NOT TO CONTAIN LEAD (BRIDGET OR EQUAL)

COPPER TUBING AND FITTINGS:

1. ALL COPPER TUBING SHALL BE ASTM B75 DRAWN TEMPER, ANSI/NSF-61 CERTIFIED, TYPE L THICKNESS.
2. COPPER SOLDER FITTINGS SHALL BE PRODUCED IN ACCORDANCE WITH ASME/ANSI B16.22, AND SHALL BE ANSI/NSF-61 CERTIFIED.

SERVICE LINES:

1. HDPE MATERIAL
   A) LISTED BY THE PPI WITH DESIGNATION OF PE-3408
   B) B) CELL CLASSIFICATION OF 345434C OR BETTER IN ACCORDANCE WITH ASTM D3350
   C) MUST EXCEED 1000 HOURS WHEN TESTED IN ACCORDANCE WITH ASTM F1248 RING ENVIRONMENTAL STRESS CRACK RESISTANCE TEST) WITH FEWER THAN 50 PERCENT FAILURES.
   D) APPROVED BY THE NATIONAL SANITATION FOUNDATION (NSF) FOR POTABLE WATER SERVICE.
   E) SHALL CONTAIN TWO PERCENT (2%) CARBON BLACK FOR ULTRAVIOLET (UV) PROTECTION AND SHALL BE HOMOGENEOUS THROUGHOUT.

MECHANICAL: FOR MECHANICAL NOTES SEE SHEET M1.1

HYDRONIC PIPING:

1. SPECIFICATIONS
2. PRESSURE TESTING
3. CLEANING

LEGEND

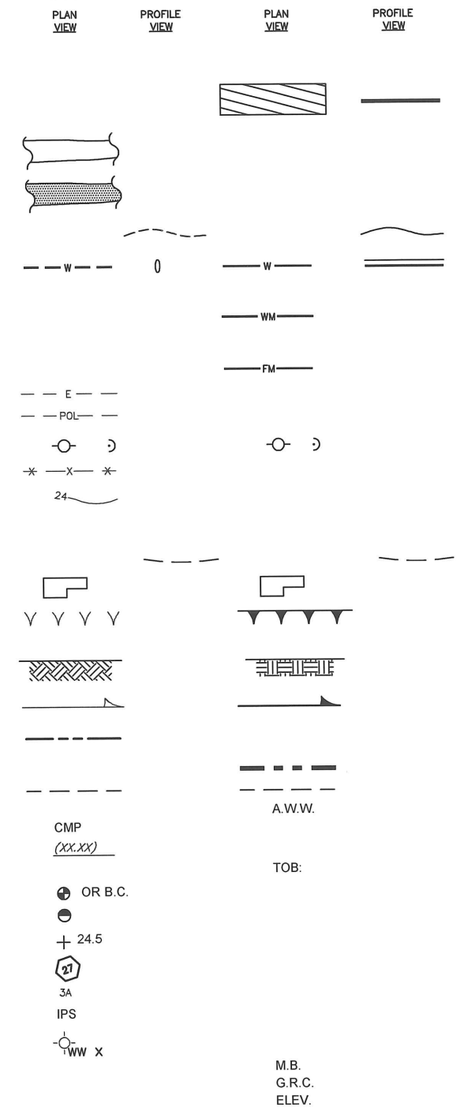

SECTION AND DETAIL DESIGNATIONS

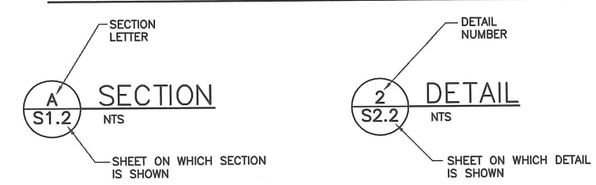

RECORD DRAWING CERTIFICATE
THESE DRAWINGS REFLECT RECORDED INFORMATION OBTAINED DURING CONSTRUCTION. INFORMATION PROVIDED HEREIN IS ACCURATE TO THE BEST OF MY KNOWLEDGE.
NAME DATE

SCALE: AS SHOWN
BAR IS ONE INCH ON ORIGINAL DRAWING 0 1"
IF NOT ONE INCH ON THIS SHEET - ADJUST SCALES ACCORDINGLY

CONSTRUCTION RECORD
FIELD BOOK
STAKING
FOREMAN
AS-BUILT
INSPECTOR

STATE OF ALASKA 49TH PAUL C. WEBNER CE-10276 REGISTERED PROFESSIONAL ENGINEER
10-15-2013

WASHETERIA AND WATER TANK
GENERAL NOTES AND LEGEND
CHEFORNAK, ALASKA

CE2 ENGINEERS, INC.
PO BOX 232046 ANCHORAGE, AK 99523 PH: 907-349-1010 FAX: 907-349-1015

REVISION	BY	DATE

Project No. ____ Date OCT. 2013 Designed ____ Drawn ____ Approved PCW

Sheet No. G4
SHEET ____ OF ____

G:\ACAD\CHEFORNAK\2013 Washeteria and Water Tank\G4 GENERAL NOTES AND LEGEND.dwg, 10/15/2013 1:43:13 PM, cmerz, \\Ce2main\LANIER MP C2050/LD520C PCL 6

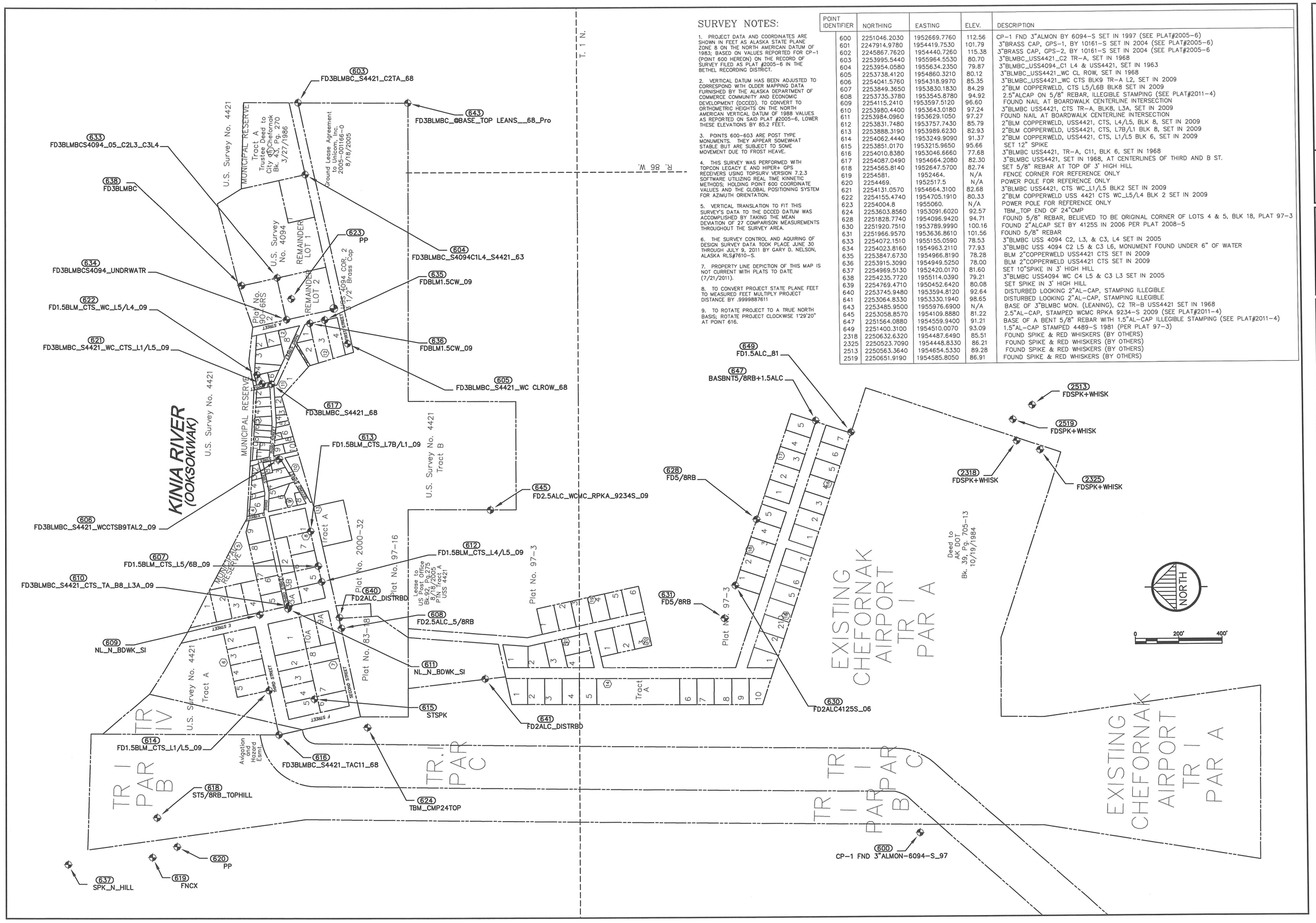

SURVEY NOTES:

1. PROJECT DATA AND COORDINATES ARE SHOWN IN FEET AS ALASKA STATE PLANE ZONE 8 ON THE NORTH AMERICAN DATUM OF 1983; BASED ON VALUES REPORTED FOR CP-1 (POINT 600 HEREON) ON THE RECORD OF SURVEY FILED AS PLAT #2005-6 IN THE BETHEL RECORDING DISTRICT.

2. VERTICAL DATUM HAS BEEN ADJUSTED TO CORRESPOND WITH OLDER MAPPING DATA FURNISHED BY THE ALASKA DEPARTMENT OF COMMERCE COMMUNITY AND ECONOMIC DEVELOPMENT (DCCED). TO CONVERT TO ORTHOMETRIC HEIGHTS ON THE NORTH AMERICAN VERTICAL DATUM OF 1988 VALUES AS REPORTED ON SAID PLAT #2005-6, LOWER THESE ELEVATIONS BY 85.2 FEET.

3. POINTS 600-603 ARE POST TYPE MONUMENTS. THEY APPEAR SOMEWHAT STABLE BUT ARE SUBJECT TO SOME MOVEMENT DUE TO FROST HEAVE.

4. THIS SURVEY WAS PERFORMED WITH TOPCON LEGACY E AND HIPER+ GPS RECEIVERS USING TOPSURV VERSION 7.2.3 SOFTWARE UTILIZING REAL TIME KINNETIC METHODS; HOLDING POINT 600 COORDINATE VALUES AND THE GLOBAL POSITIONING SYSTEM FOR AZIMUTH ORIENTATION.

5. VERTICAL TRANSLATION TO FIT THIS SURVEY'S DATA TO THE DCCED DATUM WAS ACCOMPLISHED BY TAKING THE MEAN DEVIATION OF 27 COMPARISON MEASUREMENTS THROUGHOUT THE SURVEY AREA.

6. THE SURVEY CONTROL AND AQUIRING OF DESIGN SURVEY DATA TOOK PLACE JUNE 30 THROUGH JULY 9, 2011 BY GARY D. NELSON, ALASKA RLS#7610-S.

7. PROPERTY LINE DEPICTION OF THIS MAP IS NOT CURRENT WITH PLATS TO DATE (7/21/2011).

8. TO CONVERT PROJECT STATE PLANE FEET TO MEASURED FEET MULTIPLY PROJECT DISTANCE BY .9999887611

9. TO ROTATE PROJECT TO A TRUE NORTH BASIS; ROTATE PROJECT CLOCKWISE 1°29'20" AT POINT 616.

POINT IDENTIFIER	NORTHING	EASTING	ELEV.	DESCRIPTION
600	2251046.2030	1952669.7760	112.56	CP-1 FND 3"ALMON BY 6094-S SET IN 1997 (SEE PLAT#2005-6)
601	2247914.9780	1954419.7530	101.79	3"BRASS CAP, GPS-1, BY 10161-S SET IN 2004 (SEE PLAT#2005-6)
602	2245867.7620	1954440.7260	115.38	3"BRASS CAP, GPS-2, BY 10161-S SET IN 2004 (SEE PLAT#2005-6
603	2253995.5440	1955964.5530	80.70	3"BLMBC_USS4421_C2 TR-A, SET IN 1968
604	2253954.0580	1955634.2350	79.87	3"BLMBC_USS4094_C1 L4 & USS4421, SET IN 1963
605	2253738.4120	1954860.3210	80.12	3"BLMBC_USS4421_WC CL ROW, SET IN 1968
606	2254041.5760	1954318.9970	85.35	3"BLMBC_USS4421_WC CTS BLK9 TR-A L2, SET IN 2009
607	2253849.3650	1953830.1830	84.29	2"BLM COPPERWELD, CTS L5/L6B BLK8 SET IN 2009
608	2253735.3780	1953545.8780	94.92	2.5"ALCAP ON 5/8" REBAR, ILLEGIBLE STAMPING (SEE PLAT#2011-4)
609	2254115.2410	1953597.5120	96.60	FOUND NAIL AT BOARDWALK CENTERLINE INTERSECTION
610	2253980.4400	1953643.0180	97.24	3"BLMBC USS4421, CTS TR-A, BLK8, L3A, SET IN 2009
611	2253984.0960	1953629.1050	97.27	FOUND NAIL AT BOARDWALK CENTERLINE INTERSECTION
612	2253831.7480	1953757.7430	85.79	2"BLM COPPERWELD, USS4421, CTS, L4/L5, BLK 8, SET IN 2009
613	2253888.3190	1953989.6230	82.93	2"BLM COPPERWELD, USS4421, CTS, L7B/L1 BLK 8, SET IN 2009
614	2254062.4440	1953249.9090	91.37	2"BLM COPPERWELD, USS4421, CTS, L1/L5 BLK 6, SET IN 2009
615	2253851.0170	1953215.9650	95.66	SET 12" SPIKE
616	2254010.8380	1953046.6660	77.68	3"BLMBC USS4421, TR-A, C11, BLK 6, SET IN 1968
617	2254087.0490	1954664.2080	82.30	3"BLMBC USS4421, SET IN 1968, AT CENTERLINES OF THIRD AND B ST.
618	2254565.8140	1952647.5700	82.74	SET 5/8" REBAR AT TOP OF 3' HIGH HILL
619	2254581.	1952464.	N/A	FENCE CORNER FOR REFERENCE ONLY
620	2254469.	1952517.5	N/A	POWER POLE FOR REFERENCE ONLY
621	2254131.0570	1954664.3100	82.68	3"BLMBC USS4421, CTS WC_L1/L5 BLK2 SET IN 2009
622	2254155.4740	1954705.1910	80.33	2"BLM COPPERWELD USS 4421 CTS WC_L5/L4 BLK 2 SET IN 2009
623	2254004.8	1955060.	N/A	POWER POLE FOR REFERENCE ONLY
624	2253603.8560	1953091.6020	92.57	TBM_TOP END OF 24"CMP
628	2251828.7740	1954096.9420	94.71	FOUND 5/8" REBAR, BELIEVED TO BE ORIGINAL CORNER OF LOTS 4 & 5, BLK 18, PLAT 97-3
630	2251920.7510	1953789.9990	100.16	FOUND 2"ALCAP SET BY 4125S IN 2006 PER PLAT 2008-5
631	2251966.9570	1953636.8610	101.56	FOUND 5/8" REBAR
633	2254072.1510	1955155.0590	78.53	3"BLMBC USS 4094 C2, L3, & C3, L4 SET IN 2005
634	2254023.8160	1954963.2110	77.93	3"BLMBC USS 4094 C2 L5 & C3 L6, MONUMENT FOUND UNDER 6" OF WATER
635	2253847.6730	1954966.8190	78.28	BLM 2"COPPERWELD USS4421 CTS SET IN 2009
636	2253915.3090	1954949.5250	78.00	BLM 2"COPPERWELD USS4421 CTS SET IN 2009
637	2254969.5130	1952420.0170	81.60	SET 10"SPIKE IN 3' HIGH HILL
638	2254235.7720	1955114.0390	79.21	3"BLMBC USS4094 WC C4 L5 & C3 L3 SET IN 2005
639	2254769.4710	1950452.6420	80.08	SET SPIKE IN 3' HIGH HILL
640	2253745.9480	1953594.8120	92.64	DISTURBED LOOKING 2"AL-CAP, STAMPING ILLEGIBLE
641	2253064.8330	1953330.1940	98.65	DISTURBED LOOKING 2"AL-CAP, STAMPING ILLEGIBLE
643	2253485.9500	1955976.6900	N/A	BASE OF 3"BLMBC MON. (LEANING), C2 TR-B USS4421 SET IN 1968
645	2253058.8570	1954109.8880	81.22	2.5"AL-CAP, STAMPED WCMC RPKA 9234-S 2009 (SEE PLAT#2011-4)
647	2251564.0880	1954559.9400	91.21	BASE OF A BENT 5/8" REBAR WITH 1.5"AL-CAP ILLEGIBLE STAMPING (SEE PLAT#2011-4)
649	2251400.3100	1954510.0070	93.09	1.5"AL-CAP STAMPED 4489-S 1981 (PER PLAT 97-3)
2318	2250632.6320	1954487.6490	85.51	FOUND SPIKE & RED WHISKERS (BY OTHERS)
2325	2250523.7090	1954448.8330	86.21	FOUND SPIKE & RED WHISKERS (BY OTHERS)
2513	2250563.3640	1954654.5330	89.28	FOUND SPIKE & RED WHISKERS (BY OTHERS)
2519	2250651.9190	1954585.8050	86.91	FOUND SPIKE & RED WHISKERS (BY OTHERS)

RECORD DRAWING CERTIFICATE

THESE DRAWINGS REFLECT RECORDED INFORMATION OBTAINED DURING CONSTRUCTION. INFORMATION PROVIDED HEREIN IS ACCURATE TO THE BEST OF MY KNOWLEDGE.

NAME DATE

SCALE: AS SHOWN

BAR IS ONE INCH ON ORIGINAL DRAWING 0 1"

IF NOT ONE INCH ON THIS SHEET, ADJUST SCALES ACCORDINGLY

CONSTRUCTION RECORD

FIELD BOOK

STAKING

FOREMAN

AS-BUILT

INSPECTOR

SURVEY CONTROL

CHEFORNAK, ALASKA

CE2 ENGINEERS, INC.

PO BOX 223246 ANCHORAGE, AK 99522 PH: 907-349-1010 FAX: 907-349-1015

REVISION	BY	DATE

Project No.

Date

Designed GN

Drawn CM

Approved GN

Sheet No. C1

G:\ACAD\CHEFORNAK\2013 Washeteria and Water Tank\C1 SURVEY CONTROL.dwg, 10/15/2013 1:45:29 PM, cmerz, \\Ce2main\LANIER MP C2050/LD520C PCL 6

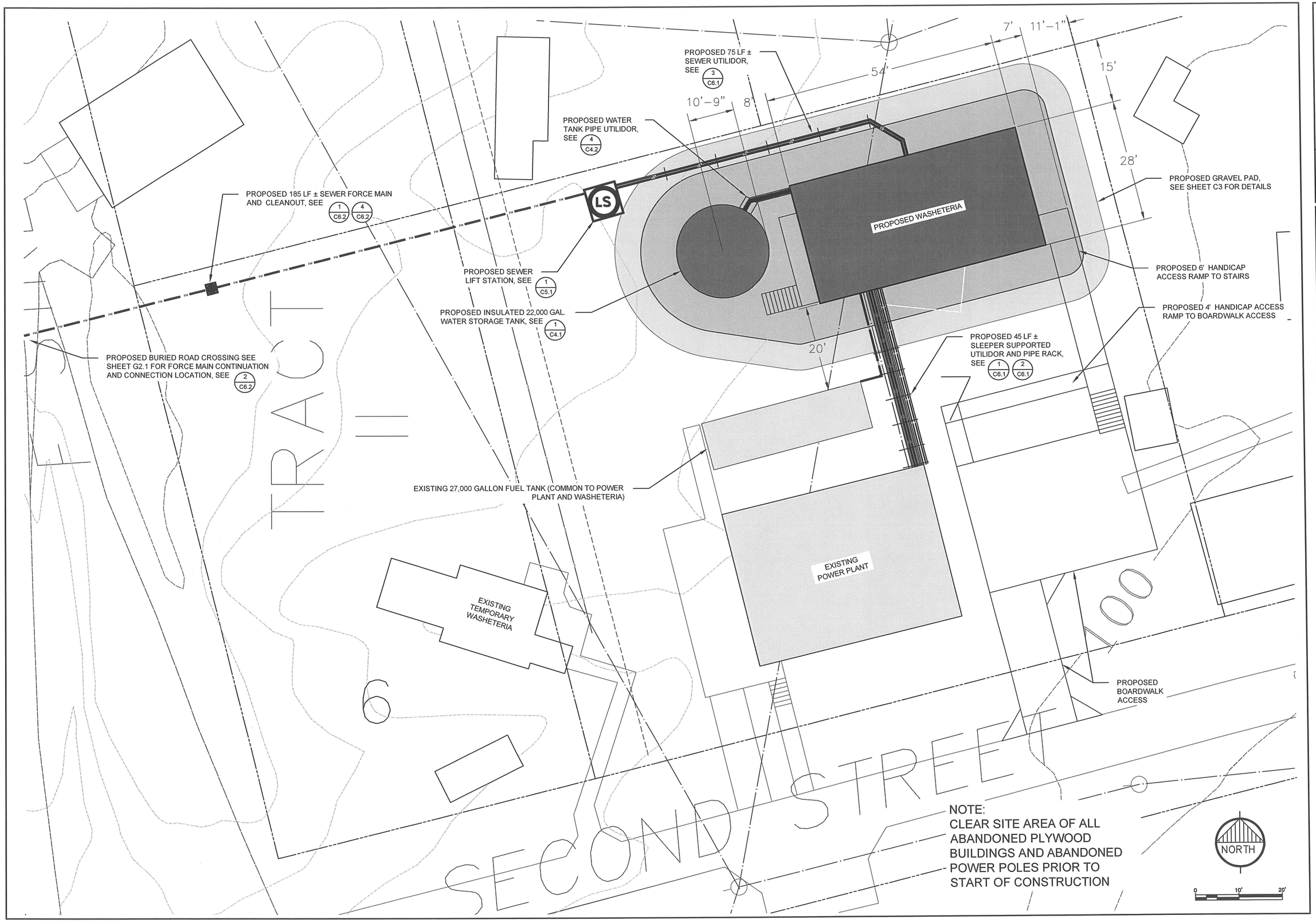

NOTE:
CLEAR SITE AREA OF ALL ABANDONED PLYWOOD BUILDINGS AND ABANDONED POWER POLES PRIOR TO START OF CONSTRUCTION

RECORD DRAWING CERTIFICATE
THESE DRAWINGS REFLECT RECORDED INFORMATION OBTAINED DURING CONSTRUCTION. INFORMATION PROVIDED HEREIN IS ACCURATE TO THE BEST OF MY KNOWLEDGE.
NAME DATE

SCALE: AS SHOWN
BAR IS ONE INCH ON ORIGINAL DRAWING
0 1"
IF NOT ONE INCH ON THIS SHEET, ADJUST SCALES ACCORDINGLY

CONSTRUCTION RECORD
FIELD BOOK
STAKING
FOREMAN
AS-BUILT
INSPECTOR

STATE OF ALASKA 4931 REGISTERED PROFESSIONAL ENGINEER PAUL C. WESNER CE-10276
2013-10-01

WASHETERIA AND WATER TANK
PROJECT SITE PLAN
CHEFORNAK, ALASKA

CE2 ENGINEERS, INC.
PO BOX 230246 ANCHORAGE, AK 99523 PH: 907-349-1010 FAX: 907-349-1015

REVISION	BY	DATE

Project No. ____
Date OCT. 2013
Designed ____
Drawn CM
Approved PCW

Sheet No. C2
SHEET ____ OF ____

G:\ACAD\CHEFORNAK\2013 Washeteria and Water Tank\C2 SITE PLAN.dwg, 10/15/2013 2:02:19 PM, cmerz, \\Ce2main\LANIER MP C2050/LD520C PCL 6

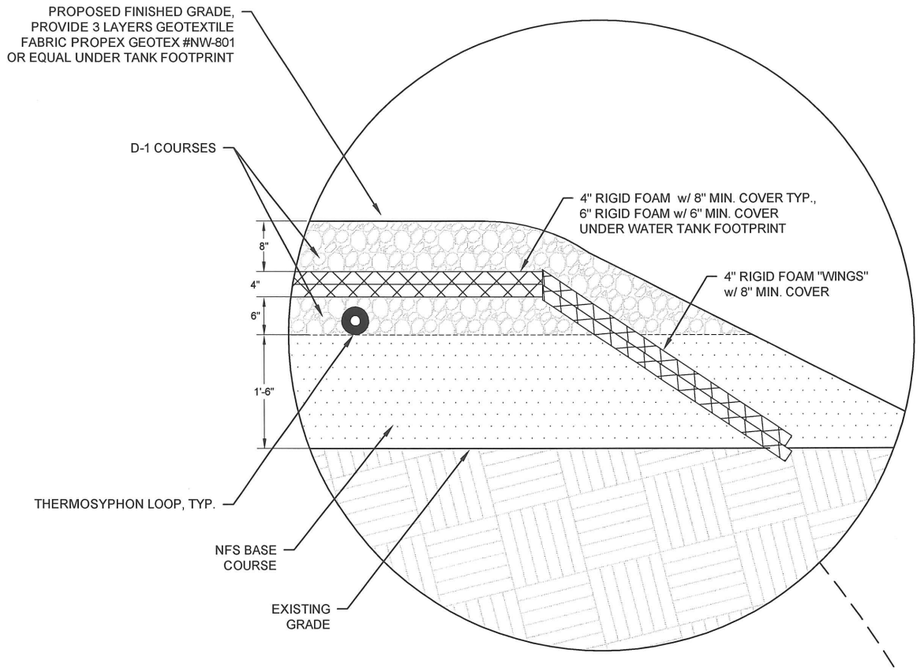

2 PAD DETAIL
SCALE: 1" = 1'-0"

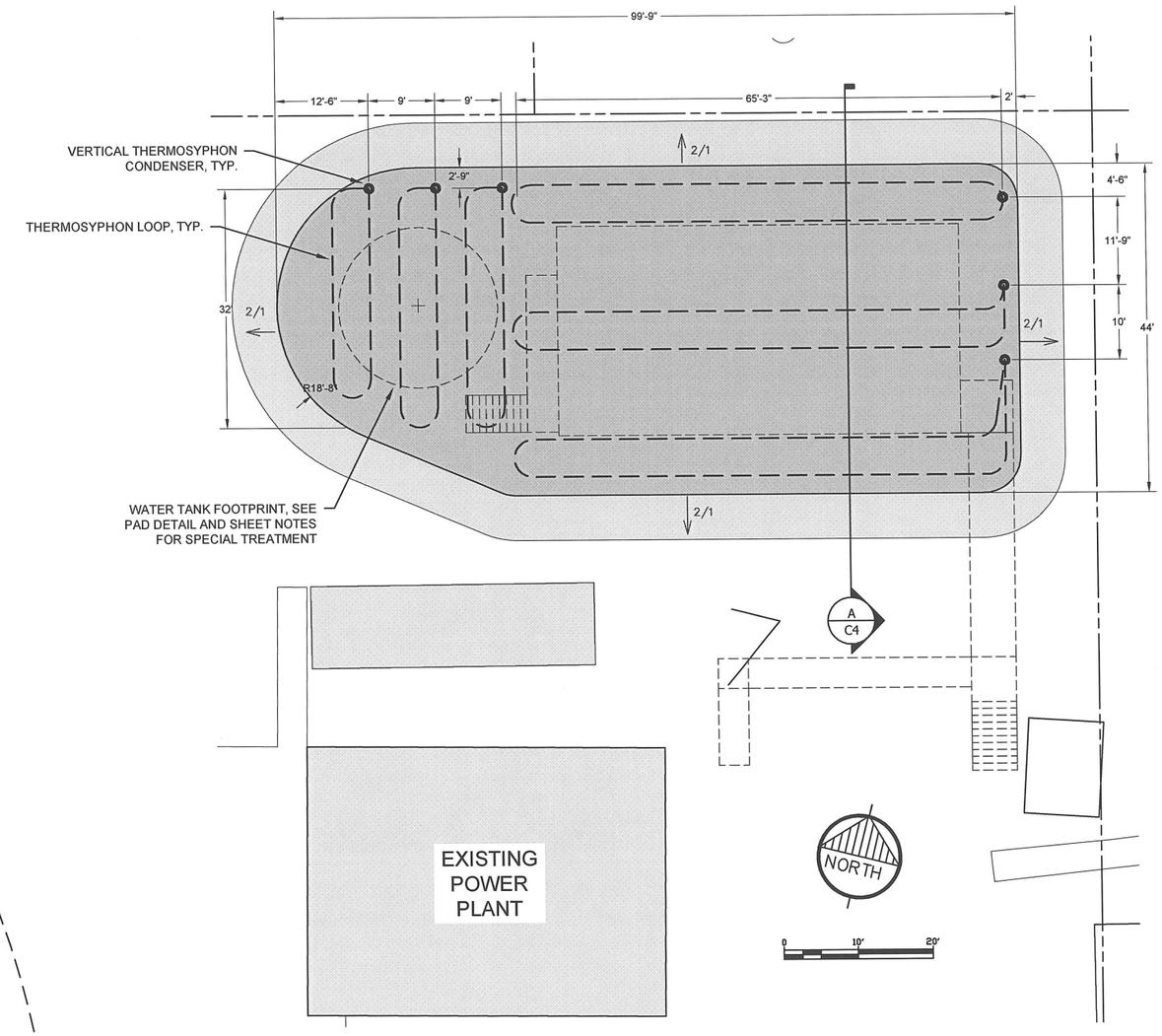

1 PAD CONSTRUCTION PLAN
SCALE: 1" = 1'-0"

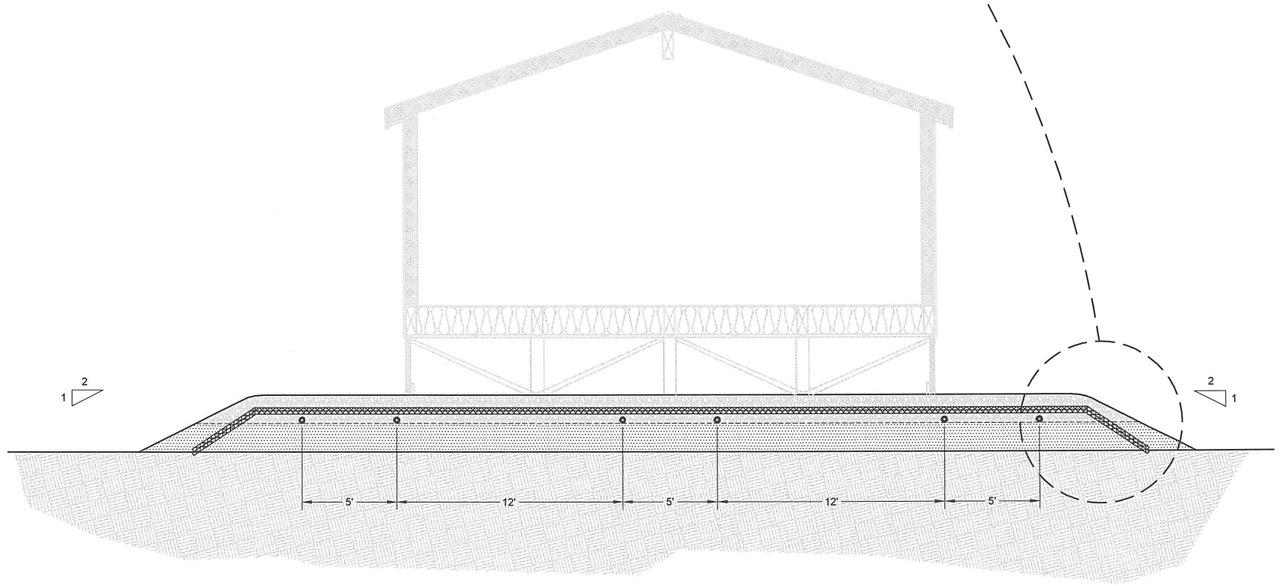

A PAD CONSTRUCTION SECTION
SCALE: 1/4" = 1'-0"

NOTES:

1. ALL DEMENSIONS ARE PRELIMINARY AND MAY CHANGE DUE TO GEOTECHNICAL INFORMATION.
2. BASED ON FUTURE SOILS INVESTIGATIONS, THERMOSYPHON LOOPS MAY NOT BE NEEDED WUNDER WASHETERIA. HOWEVER, PIPING LOOPS WILL BE PLACED WHEN PAD IS CONSTRUCTED FOR FUTURE ACTVIATION, IF NEEDED.
3. THREE THERMOSYPHON LOOPS WILL BE PLACED AND CHARGED FOR WATER STORAGE TANK PAD.
4. FOAM INSULATION SHALL BE DOW HI-40 EXTRUDED POLYSTYRENE INSULATION(2'x8'x2" THK) SHEETS, PLACED CROSSWAYS IN 2 LAYERS FOR 4" INSULATION, AND 3 CROSSWAYS LAYERS FOR 6" INSULATION (UNDER WATER TANK)
5. UNDER WATER TANK FOOTPRINT PROVIDE 3 LAYERS NON-WOVEN GEOTEXTILE FABRIC PROPEX GEOTEX #NW-801 OR EQUAL

RECORD DRAWING CERTIFICATE
THESE DRAWINGS REFLECT RECORDED INFORMATION OBTAINED DURING CONSTRUCTION. INFORMATION PROVIDED HEREIN IS ACCURATE TO THE BEST OF MY KNOWLEDGE.
NAME
DATE

SCALE: AS SHOWN
BAR IS ONE INCH ON ORIGINAL DRAWING
0 1"
IF NOT ONE INCH ON THIS SHEET, ADJUST SCALES ACCORDINGLY

CONSTRUCTION RECORD
FIELD BOOK
STAKING
FOREMAN
AS-BUILT
INSPECTOR

STATE OF ALASKA
49TH
PAUL C. WEBNER
CE-10276
REGISTERED PROFESSIONAL ENGINEER
10-15-2013

WASHETERIA AND WATER TANK
PAD CONSTRUCTION
CHEFORNAK, ALASKA

CE2 ENGINEERS, INC.
PO BOX 232046 ANCHORAGE, AK 99523 PH: 907-349-1010 FAX: 907-349-1015

REVISION	BY	DATE

Project No. ____
Date OCT. 2013
Designed ____
Drawn ____
Approved PCW

Sheet No. C3
SHEET ____ OF ____

G:\ACAD\CHEFORNAK\2013 Washeteria and Water Tank\C3 Pad Construction.dwg, 10/15/2013 2:03:06 PM, cmerz, \\Ce2main\LANIER MP C2050/LD520C PCL 6

NOTES

1. ORIENT ACCESSORIES AS SHOWN. IF CONFLICT ARISES WITH STAVE VERTICAL SEAMS, CONTACT ENGINEER FOR RESOLUTION.\
2. ALL NOZZLES SHALL BE TYPE 304 STAINLESS STEEL.
3. TANK WILL BE INSULATED WITH 5" FOAM INSULATION TOP (DOUBLE DECK) AND SIDES (THERMACON OR EQUAL). INCLUDING MANHOLE INSULATION COVERS

ACCESSORY ORIENTATION CHART

ITEM	SERVICE	SIZE	REF DEGREE	RADIUS	ELEVATION FROM BOTTOM FLANGE OF SIDE STAVE TO CENTERLINE OF ACCESSORY
1	NOZZLE MANIFOLD	10"	45°	---	1'-0"
2	SHELL MANWAY	30"	180°	---	2'-6"
3	ROOF HATCH	24"	180°	---	---
4	MUSHROOM VENTILATOR	20"	CENTER	CENTER	---
5	LADDER, SAFETY CAGE, LOCKING LID	---	225°	---	---
6	FLANGED DRAIN NOZZLE AND INTERNAL SUCTION ELBOW	3"	247.5°	---	9"
7	INTERNAL OVERFLOW PIPE	4"	270°	---	2'-0"

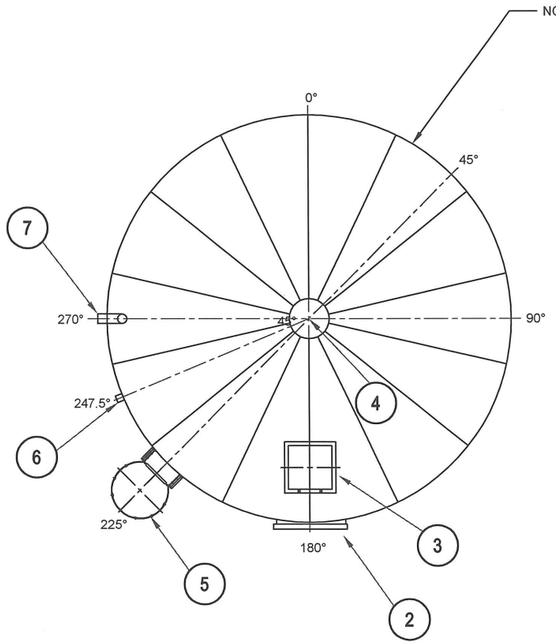

1 / C4.1 WATER TANK DECK PLAN
NOT TO SCALE

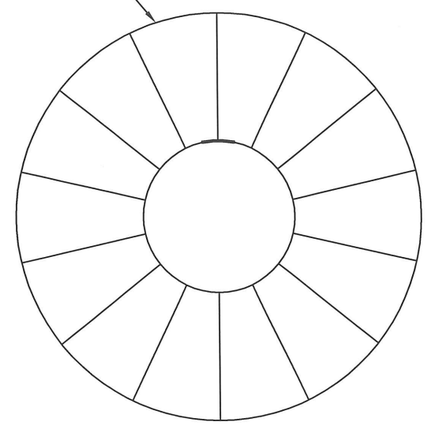

2 / C4.1 WATER TANK BOTTOM PLAN
NOT TO SCALE

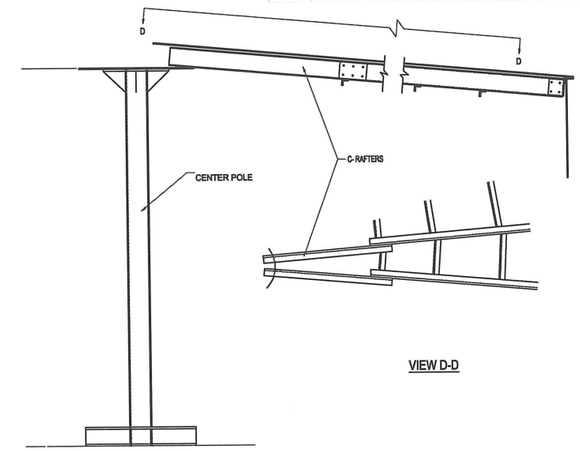

3 / C4.1 CENTER SUPPORT DETAIL
NOT TO SCALE

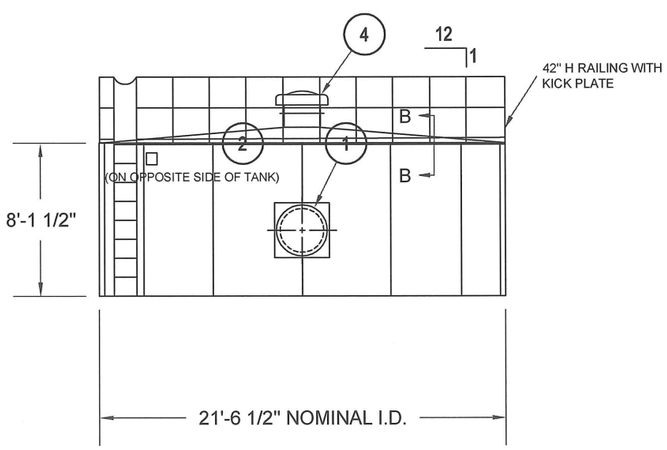

A / C4.1 WATER TANK ELEVATION
NOT TO SCALE

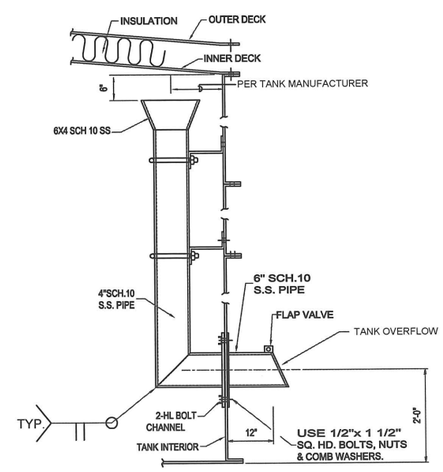

4 / C4.1 INTERNAL OVERFLOW WEIR
NOT TO SCALE

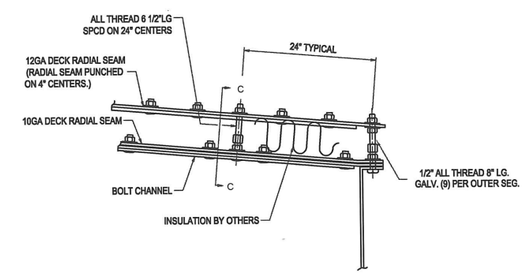

B / C4.1 SECTION B-B
NOT TO SCALE

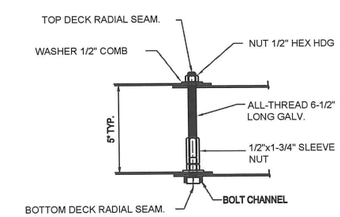

C / C4.1 SECTION C-C
NOT TO SCALE

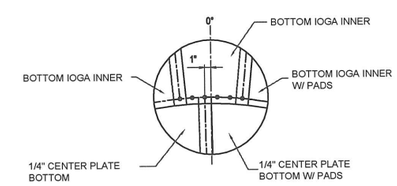

5 / C4.1 FLOOR JOINT DETAIL
NOT TO SCALE

RECORD DRAWING CERTIFICATE
THESE DRAWINGS REFLECT RECORDED INFORMATION OBTAINED DURING CONSTRUCTION. INFORMATION PROVIDED HEREIN IS ACCURATE TO THE BEST OF MY KNOWLEDGE.
NAME DATE

SCALE: AS SHOWN
BAR IS ONE INCH ON ORIGINAL DRAWING 0 1"
IF NOT ONE INCH ON THIS SHEET, ADJUST SCALES ACCORDINGLY

CONSTRUCTION RECORD
FIELD BOOK
STAKING
FOREMAN
AS-BUILT
INSPECTOR

STATE OF ALASKA 49TH PAUL C. WESNER CE-10276 REGISTERED PROFESSIONAL ENGINEER

WASHETERIA AND WATER TANK
WATER TANK PLAN, ELEVATIONS, AND DETAILS
CHEFORNAK, ALASKA

CE2 ENGINEERS, INC.
P.O. BOX 223248 ANCHORAGE, AK 99523 PH: 907-349-1010 FAX: 907-349-1015

REVISION	BY	DATE

Project No. ____ Date OCT. 2013
Designed PCW
Drawn CM
Approved PCW

Sheet No. C4.1
SHEET ____ OF ____

G:\ACAD\CHEFORNAK\2013 Washeteria and Water Tank\C4.1 C4.2 WATER TANK.dwg, 10/15/2013 2:11:57 PM, cmerz, \\Ce2main\LANIER MP C2050/LD520C PCL 6

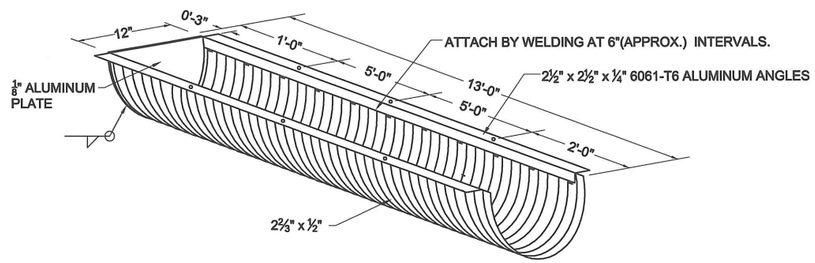

NOTES:

1) DIMENSIONS ARE SUBJECT TO MANUFACTURING TOLERANCES.

1 / C4.2 OVERFLOW CULVERT DETAIL
NOT TO SCALE

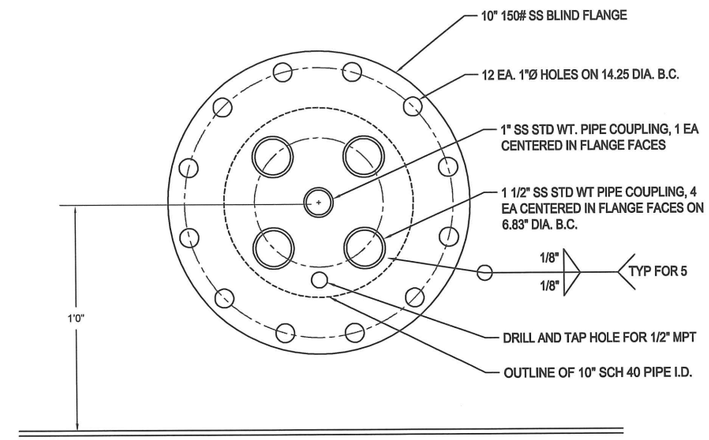

2 / C4.2 WATER TANK PIPE MANIFOLD FLANGE
NOT TO SCALE

NOTES:

1. REMOVE ALL ORGANIC MATERIAL 6-10" BENEATH THE 4x12 SLEEPERS AND REPLACE WITH ADOT TYPE C-1 MATERIAL.
2. STACK UP TO 2 SLEEPERS AS FIELD REQUIRED.
3. UTILIDOR SLEEPER SUPPORTS WILL BE PLACED EVERY 6' O.C.

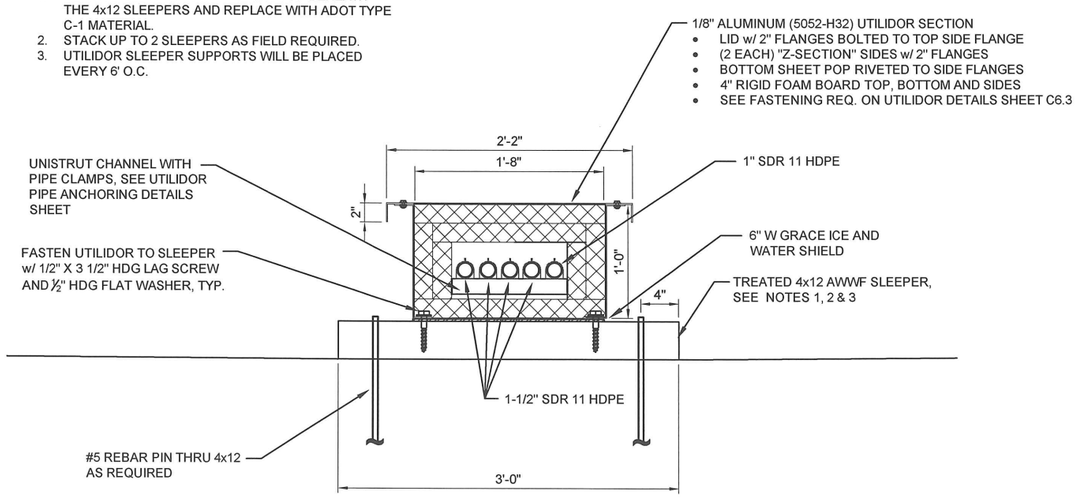

4 / C4.2 WATER TANK PIPE UTILIDOR
NOT TO SCALE

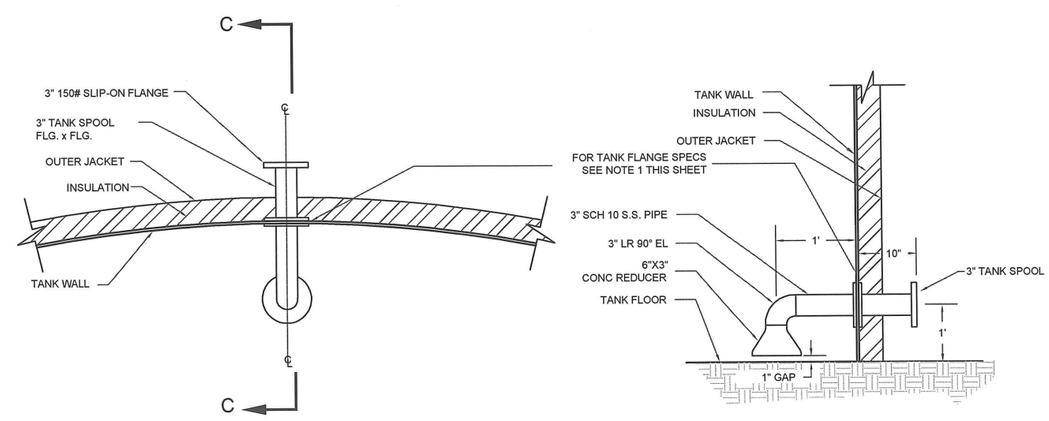

SECTION C-C

3 / C4.2 3" DRAIN PIPE AND SUCTION DETAIL
NOT TO SCALE

RECORD DRAWING CERTIFICATE
THESE DRAWINGS REFLECT RECORDED INFORMATION OBTAINED DURING CONSTRUCTION. INFORMATION PROVIDED HEREIN IS ACCURATE TO THE BEST OF MY KNOWLEDGE.
NAME DATE

SCALE: AS SHOWN
BAR IS ONE INCH ON ORIGINAL DRAWING
0 1"
IF NOT ONE INCH ON THIS SHEET, ADJUST SCALES ACCORDINGLY

CONSTRUCTION RECORD
FIELD BOOK
STAKING
FOREMAN
AS-BUILT
INSPECTOR

STATE OF ALASKA 49TH PAUL A. CHERNICK CE-10276 REGISTERED PROFESSIONAL ENGINEER

WASHETERIA AND WATER TANK
WATER TANK DETAILS
CHEFORNAK, ALASKA

CE2 ENGINEERS, INC.
PO BOX 222096 ANCHORAGE, AK 99520 PH: 907-349-1010 FAX: 907-349-1015

REVISION	BY	DATE

Project No. ____ Date OCT. 2013
Designed PCW
Drawn CM
Approved PCW

Sheet No. C4.2
SHEET ____ OF ____

G:\ACAD\CHEFORNAK\2013 Washeteria and Water Tank\C4.1 C4.2 WATER TANK.dwg, 10/15/2013 2:32:27 PM, cmerz, \\Ce2main\LANIER MP C2050/LD520C PCL 6

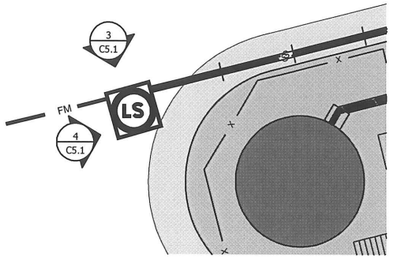

KEY MAP

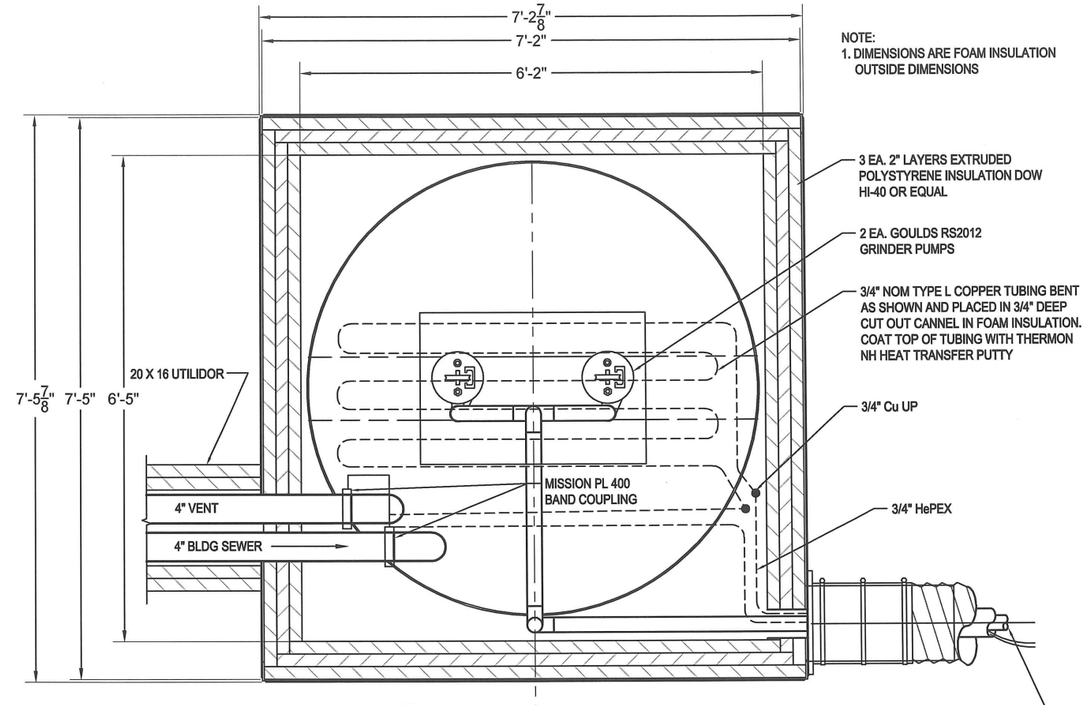

NOTE:
1. DIMENSIONS ARE FOAM INSULATION OUTSIDE DIMENSIONS

1 C5.1 UTILITY BOX PLAN VIEW
NTS

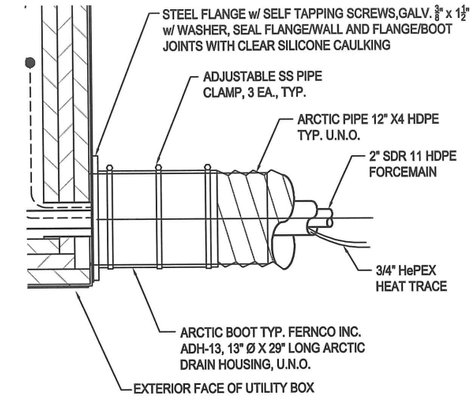

2 C5.1 PENETRATION DETAIL PLAN VIEW
NTS

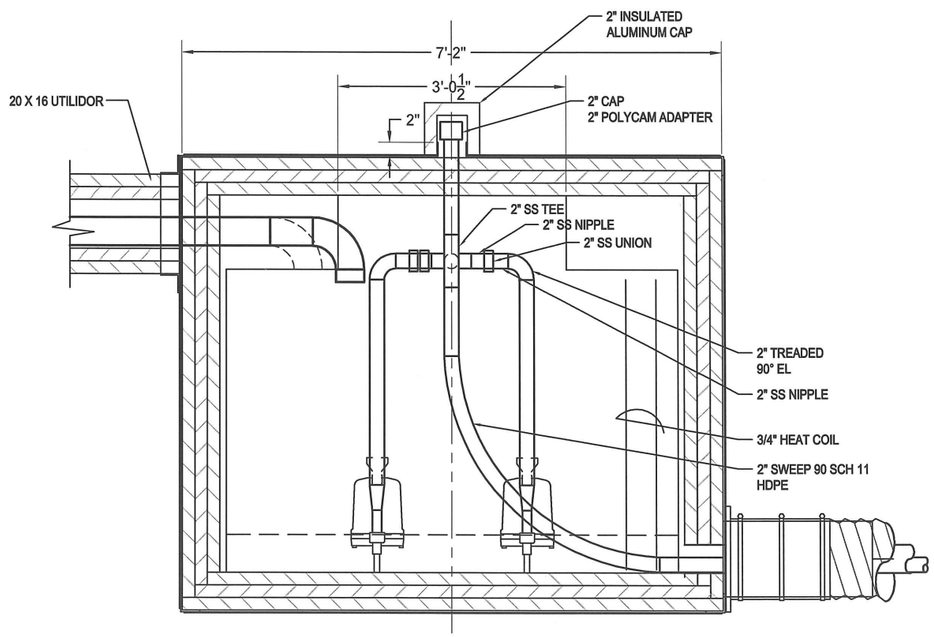

3 C5.1 ELEVATION
NTS

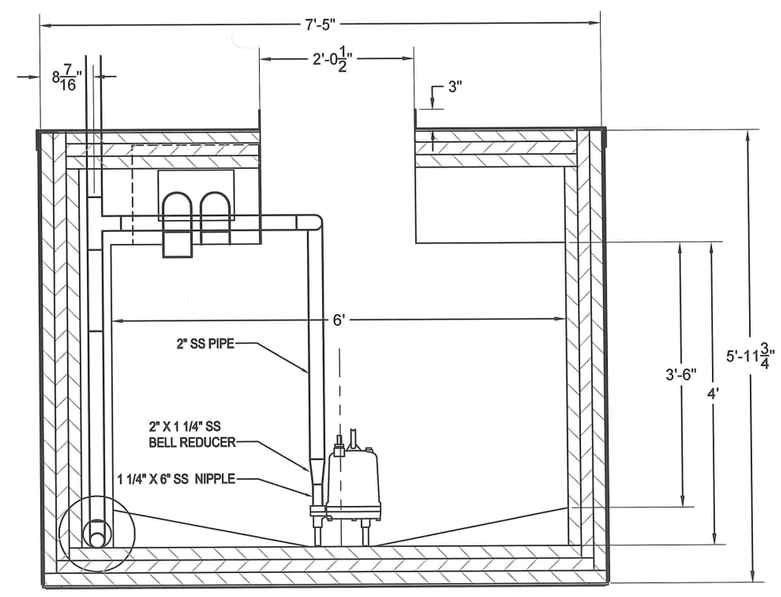

4 C5.1 ELEVATION
NTS

RECORD DRAWING CERTIFICATE
THESE DRAWINGS REFLECT RECORDED INFORMATION OBTAINED DURING CONSTRUCTION. INFORMATION PROVIDED HEREIN IS ACCURATE TO THE BEST OF MY KNOWLEDGE.
NAME | DATE

SCALE: AS SHOWN
BAR IS ONE INCH ON ORIGINAL DRAWING
0 1"
IF NOT ONE INCH ON THIS SHEET, ADJUST SCALES ACCORDINGLY

CONSTRUCTION RECORD
FIELD BOOK
STAKING
FOREMAN
AS-BUILT
INSPECTOR

STATE OF ALASKA
49TH
PAUL C. MESSER
CE-10276
REGISTERED PROFESSIONAL ENGINEER

WASHETERIA AND WATER TANK
LIFT STATION DETAILS
CHEFORNAK, ALASKA

CE2 ENGINEERS, INC.
PO BOX 232048 ANCHORAGE, AK 99523 PH: 907-349-1010 FAX: 907-349-1015

REVISION	BY	DATE

Project No. ____
Date OCT. 2013
Designed ____
Drawn ____
Approved PCW

Sheet No. C5.1
SHEET ____ OF ____

G:\ACAD\CHEFORNAK\2013 Washeteria and Water Tank\C5.1 C5.2 C5.3 LIFT STATION DETAILS.dwg, 10/15/2013 2:35:22 PM, cmerz, \\Ce2main\LANIER MP C2050/LD520C PCL 6

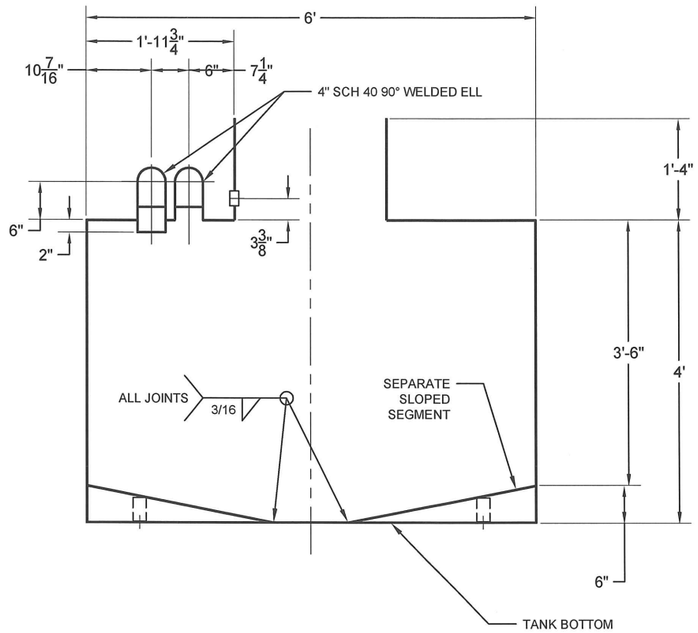

3 / C5.2 ELEVATIONS
NTS

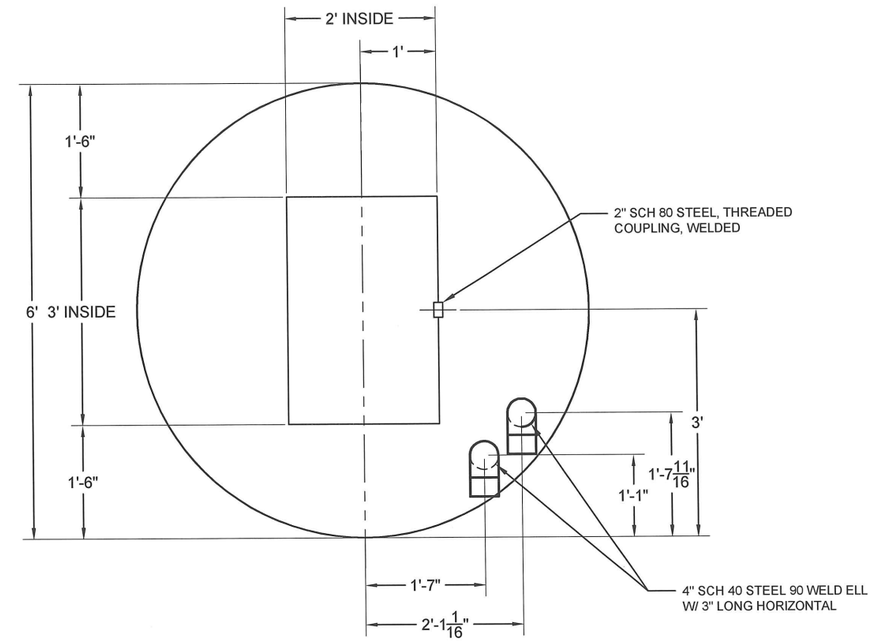

1 / C5.2 TANK TOP
NTS

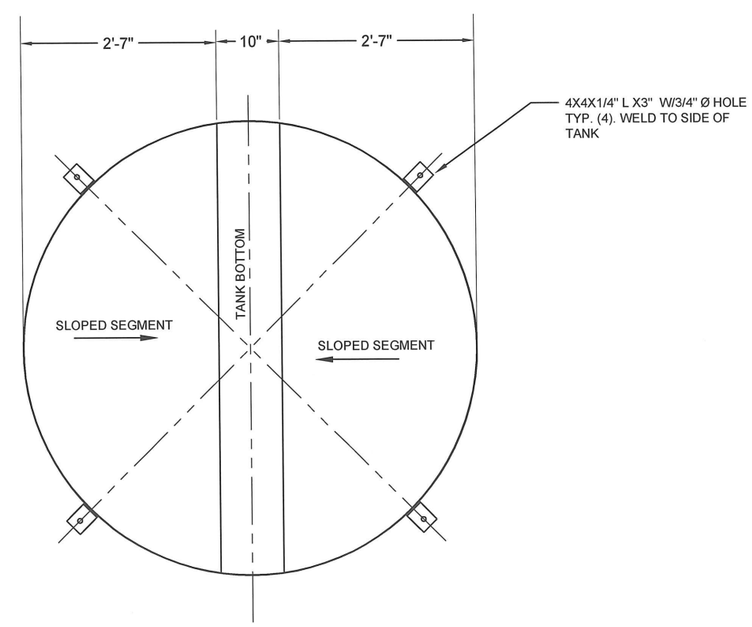

2 / C5.2 TANK BOTTOM
NTS

RECORD DRAWING CERTIFICATE
THESE DRAWINGS REFLECT RECORDED INFORMATION OBTAINED DURING CONSTRUCTION. INFORMATION PROVIDED HEREIN IS ACCURATE TO THE BEST OF MY KNOWLEDGE.
NAME DATE

SCALE: AS SHOWN
BAR IS ONE INCH ON ORIGINAL DRAWING 0 1"
IF NOT ONE INCH ON THIS SHEET, ADJUST SCALES ACCORDINGLY

CONSTRUCTION RECORD
FIELD BOOK
STAKING
FOREMAN
AS-BUILT
INSPECTOR

STATE OF ALASKA 49TH PAUL C. MESNER CE-10276 REGISTERED PROFESSIONAL ENGINEER

WASHETERIA AND WATER TANK
LIFT STATION TANK
CHEFORNAK, ALASKA

CE2 ENGINEERS, INC.
PO BOX 223948 ANCHORAGE, AK 99523 PH: 907-349-1010 FAX: 907-349-1015

REVISION	BY	DATE

Project No. ____
Date OCT. 2013
Designed ____
Drawn ____
Approved PCM

Sheet No. C5.2
SHEET ____ OF ____

G:\ACAD\CHEFORNAK\2013 Washeteria and Water Tank\C5.1 C5.2 C5.3 LIFT STATION DETAILS.dwg, 10/15/2013 2:35:55 PM, cmerz, \\Ce2main\LANIER MP C2050/LD520C PCL 6

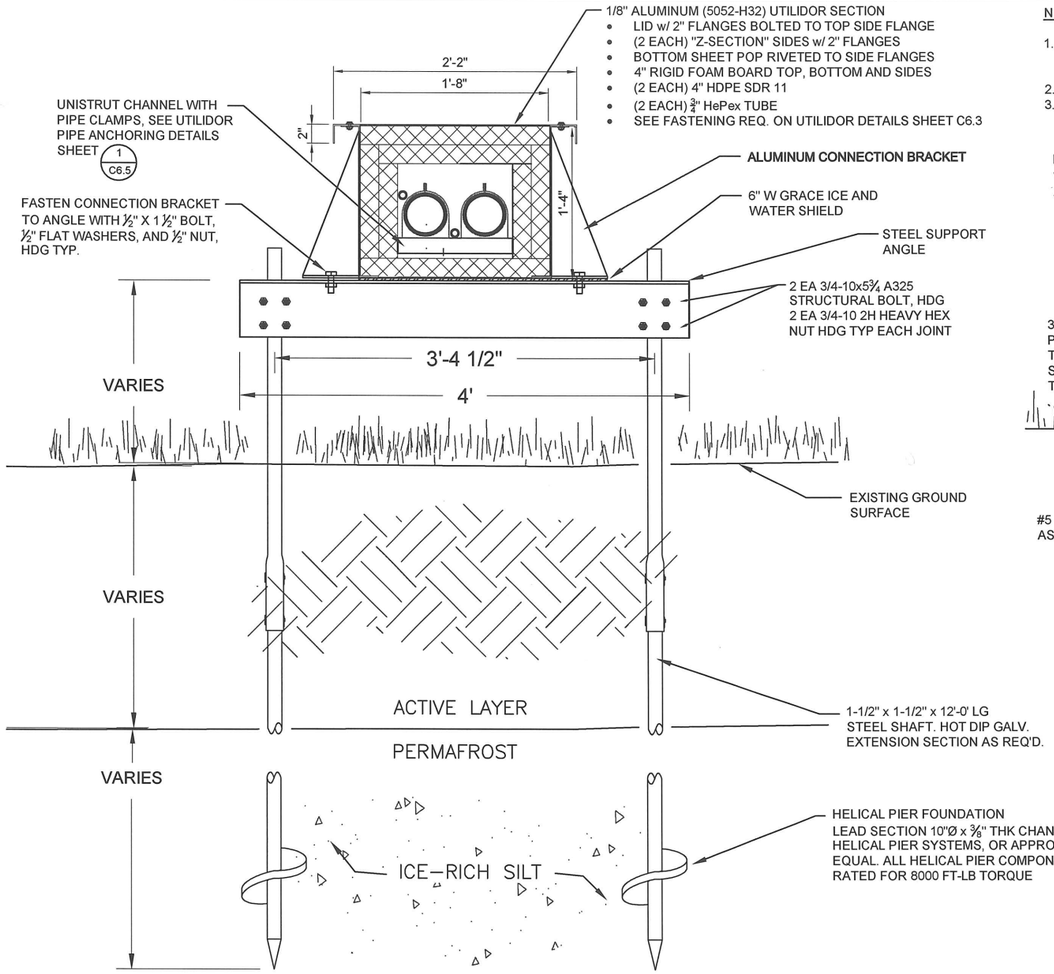

3 C6.1 SEWER UTILIDOR HELICAL PIER SUPPORT DETAILS
NTS

NOTES:

1. REMOVE ALL ORGANIC MATERIAL 6-10" BENEATH THE 4x12 SLEEPERS AND REPLACE WITH ADOT TYPE C-1 MATERIAL.
2. STACK UP TO 2 SLEEPERS AS FIELD REQUIRED.
3. UTILIDOR SLEEPER SUPPORTS WILL BE PLACED EVERY 6' O.C.

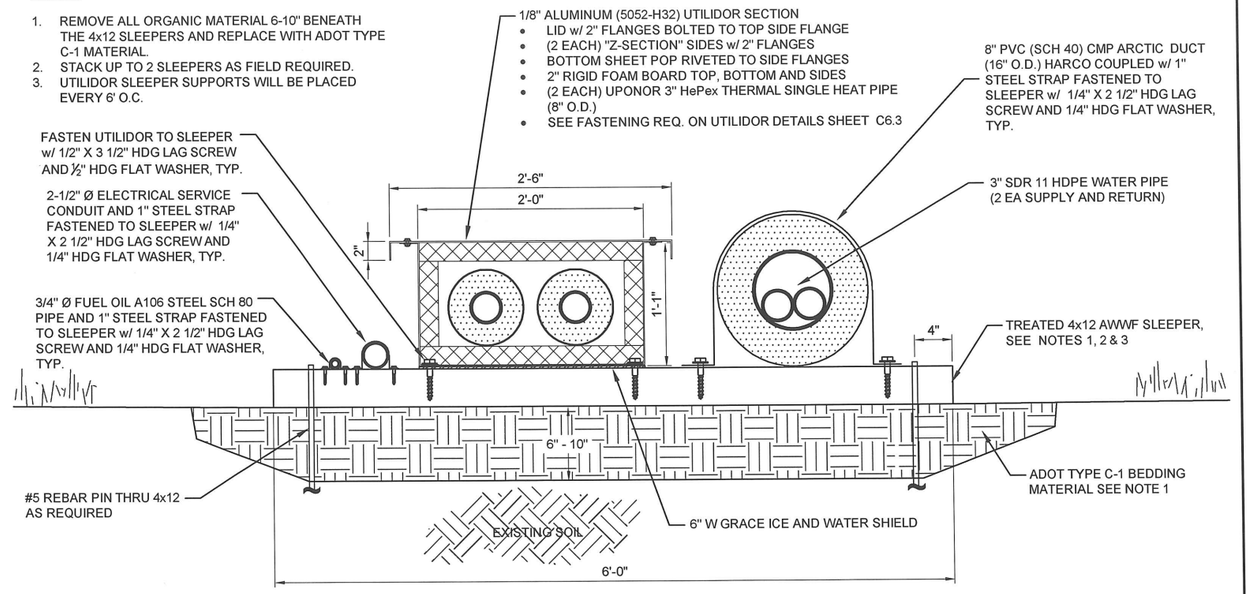

1 C6.1 WATER DUCT AND WASTE HEAT UTILIDOR SLEEPER SUPPORT DETAILS
NTS

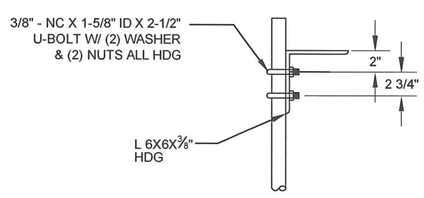

4 C6.1 STEEL SUPPORT ANGLE DETAILS
NTS

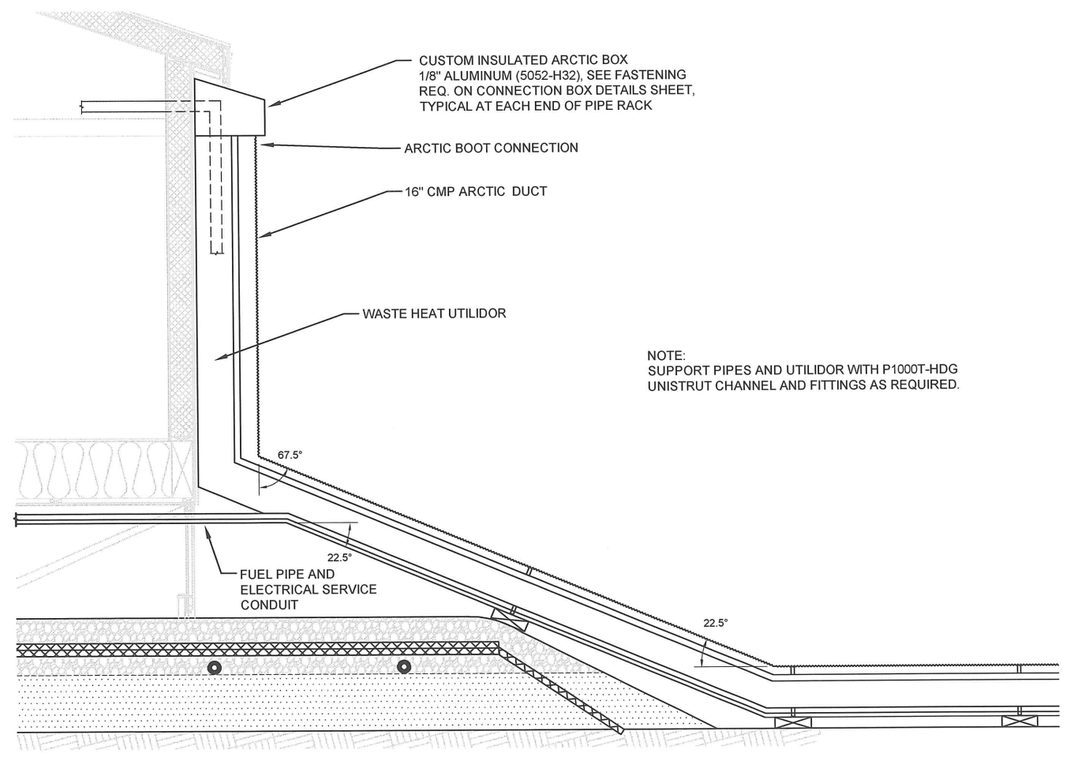

2 C6.1 WATER DUCT AND WASTE HEAT UTILIDOR CONNECTION TO WASHETERIA
NTS

RECORD DRAWING CERTIFICATE
THESE DRAWINGS REFLECT RECORDED INFORMATION OBTAINED DURING CONSTRUCTION. INFORMATION PROVIDED HEREIN IS ACCURATE TO THE BEST OF MY KNOWLEDGE.
NAME DATE

SCALE: AS SHOWN
BAR IS ONE INCH ON ORIGINAL DRAWING 0 1"
IF NOT ONE INCH ON THIS SHEET, ADJUST SCALES ACCORDINGLY

CONSTRUCTION RECORD
FIELD BOOK
STAKING
FOREMAN
AS-BUILT
INSPECTOR

STATE OF ALASKA 49TH PAUL C. WEBNER CE-10276 REGISTERED PROFESSIONAL ENGINEER

WASHETERIA AND WATER TANK
UTILIDOR / PIPE SUPPORT DETAILS
CHEFORNAK, ALASKA

CE2 ENGINEERS, INC.
PO BOX 232948 ANCHORAGE, AK 99523 PH: 907-349-1010 FAX: 907-349-1015

REVISION	BY	DATE

Project No. ____ Date OCT. 2013
Designed PCW
Drawn CM
Approved PCW

Sheet No. C6.1
SHEET ____ OF ____

G:\ACAD\CHEFORNAK\2013 Washeteria and Water Tank\C6.1 Utilidor Details.dwg, 10/15/2013 2:55:00 PM, cmerz, \\Ce2main\LANIER MP C2050/LD520C PCL 6

NOTES:

1. REMOVE ALL ORGANIC MATERIAL 6-10" BENEATH THE 4x12 SLEEPERS AND REPLACE WITH ADOT TYPE C-1 MATERIAL.
2. STACK UP TO 2 SLEEPERS AS FIELD REQUIRED.
3. UTILIDOR SLEEPER SUPPORTS WILL BE PLACED EVERY 6' O.C.

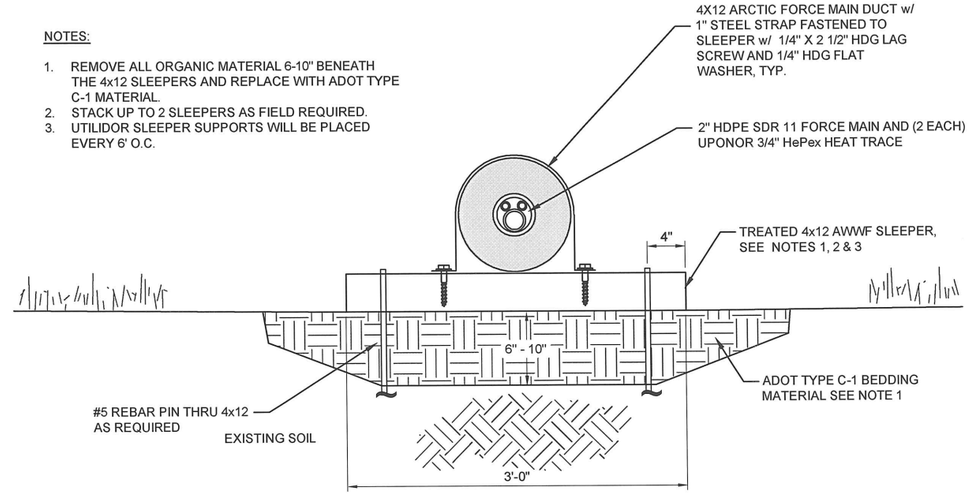

1 / C6.2 4X12 ARCTIC PIPE FORCEMAIN DUCT SLEEPER SUPPORT
SCALE: NTS

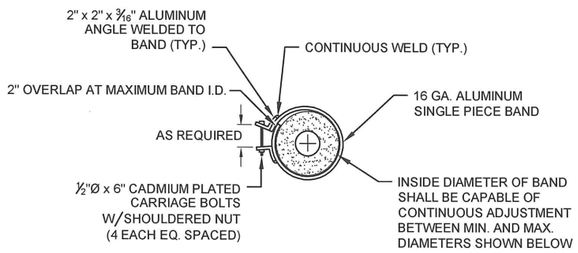

NOM. JACKET SIZE	ACTUAL JACKET SIZE (O.D.)	INSIDE DIAMETER MIN.	INSIDE DIAMETER MAX.
12"	12 7/8"	12 1/8"	13 5/8"
15'	15 7/8"	15 1/8"	16 5/8"
16"	16 7/8"	16 1/8"	17 5/8"
18"	18 7/8"	18 3/8"	20"
21"	20 7/8"	20 3/8"	22'

END VIEW

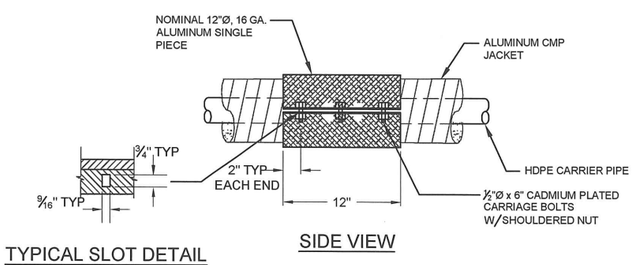

TYPICAL SLOT DETAIL

SIDE VIEW

4 / C6.2 ARCTIC PIPE COUPLING BAND DETAIL
SCALE: NTS

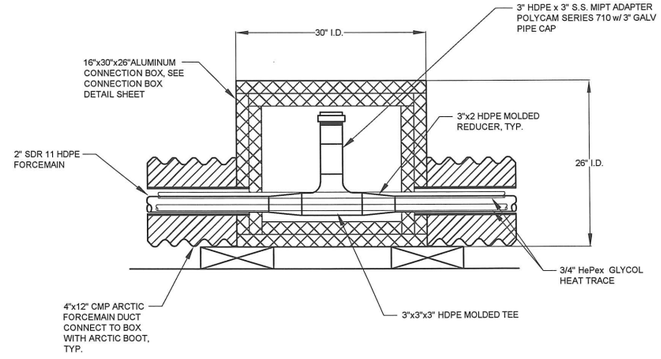

ELEVATION VIEW

3 / C6.2 4X12 ARCTIC PIPE DUCT CLEANOUT DETAIL
SCALE: NTS

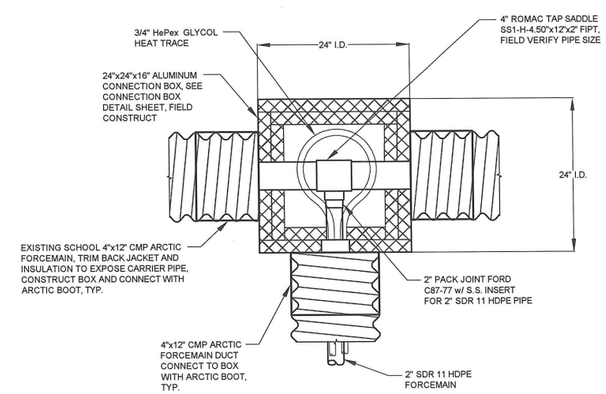

PLAN VIEW

2 / C6.2 4X12 ARCTIC PIPE DUCT CLEANOUT DETAIL
SCALE: NTS

RECORD DRAWING CERTIFICATE

THESE DRAWINGS REFLECT RECORDED INFORMATION OBTAINED DURING CONSTRUCTION. INFORMATION PROVIDED HEREIN IS ACCURATE TO THE BEST OF MY KNOWLEDGE.

NAME DATE

SCALE: AS SHOWN

BAR IS ONE INCH ON ORIGINAL DRAWING 0 1"

IF NOT ONE INCH ON THIS SHEET, ADJUST SCALES ACCORDINGLY

CONSTRUCTION RECORD

FIELD BOOK
STAKING
FOREMAN
AS-BUILT
INSPECTOR

STATE OF ALASKA 49TH PAUL C. WEBNER CE-10276 REGISTERED PROFESSIONAL ENGINEER

WASHETERIA AND WATER TANK

FORCE MAIN PIPE DETAILS

CHEFORNAK, ALASKA

CE2 ENGINEERS, INC.
PO BOX 223948 ANCHORAGE, AK 99523 PH: 907-349-1010 FAX: 907-349-1015

REVISION	BY	DATE

Project No.
Date OCT. 2013
Designed PCW
Drawn DDR
Approved PCW

Sheet No. C6.2
SHEET ____ OF ____

G:\ACAD\CHEFORNAK\2013 Washeteria and Water Tank\C6.2 FORCEMAIN CONNECTION DETAILS.dwg, 10/15/2013 2:59:05 PM, cmerz, \\Ce2main\LANIER MP C2050/LD520C PCL 6

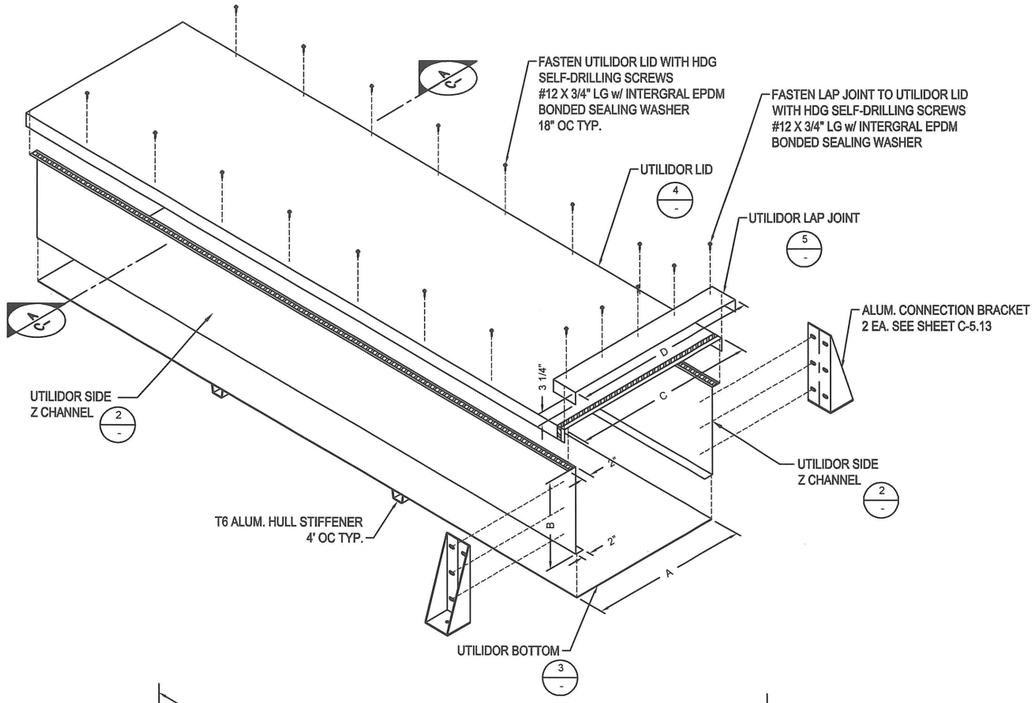

1 C6.3 UTILIDOR ISOMETRIC
NTS

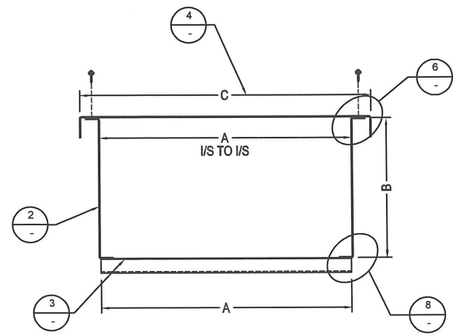

A C6.3 UTILIDOR SECTION
NTS

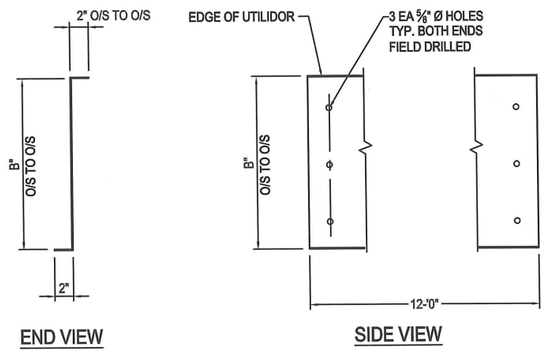

2 C6.3 SIDE Z-CHANNEL DETAILS
NTS

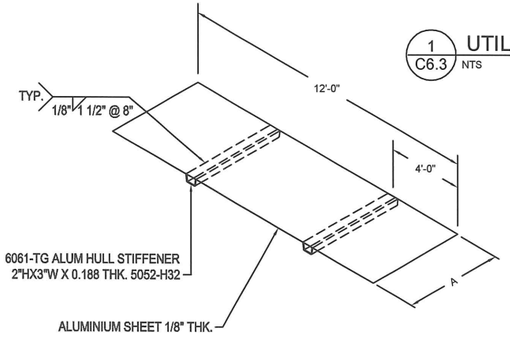

3 C6.3 BOTTOM SHEET DETAIL
NTS

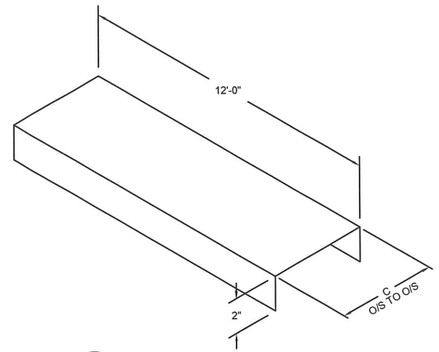

4 C6.3 UTILIDOR LID DETAIL
NTS

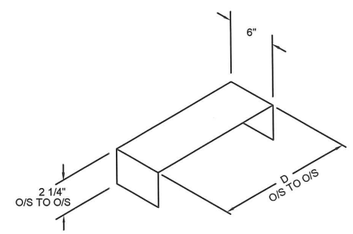

5 C6.3 UTILIDOR LAP JOINT
NTS

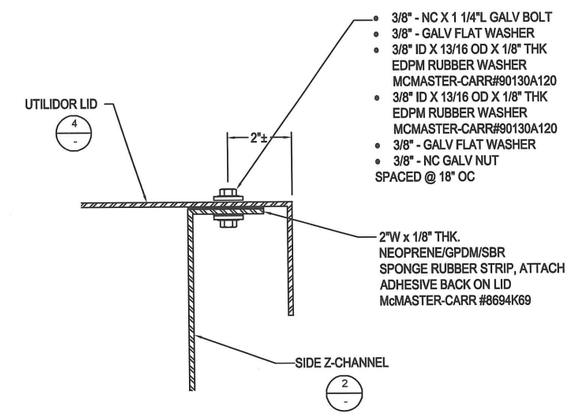

6 C6.3 TOP CORNER DETAILS
NTS

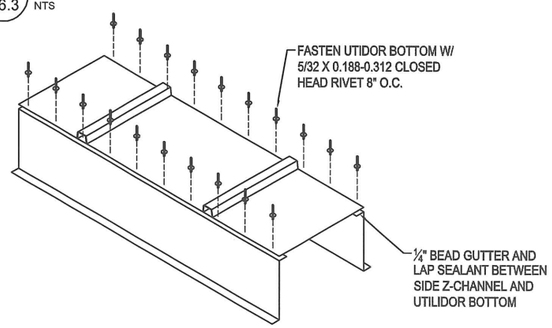

7 C6.3 BOTTOM FASTENING DETAILS
NTS

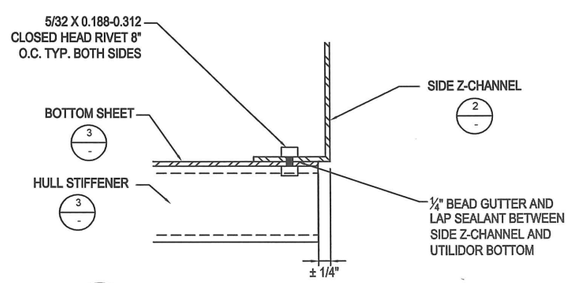

8 C6.3 BOTTOM CORNER DETAILS
NTS

NOTE:

1. ALL ALUMINIUM SHALL BE 5052 1/8" THICK, UNLESS OTHERWISE NOTED.
2. BOTTOM OF UTILIDOR WILL BE SEALED W/ BUTUAL ACETATE GUTTER AND LAP SEALANT 1/4" BEAD.
3. FASTEN UTILIDOR BOTTOM W/ RIVETS BEFORE INSTALLING ALUMINIUM HULL STIFFENERS.

RECORD DRAWING CERTIFICATE
THESE DRAWINGS REFLECT RECORDED INFORMATION OBTAINED DURING CONSTRUCTION. INFORMATION PROVIDED HEREIN IS ACCURATE TO THE BEST OF MY KNOWLEDGE.
NAME
DATE

SCALE: AS SHOWN
BAR IS ONE INCH ON ORIGINAL DRAWING
0 1"
IF NOT ONE INCH ON THIS SHEET, ADJUST SCALE ACCORDINGLY

CONSTRUCTION RECORD
FIELD BOOK:
STAKING
FOREMAN
AS-BUILT
INSPECTOR

STATE OF ALASKA 49TH PAUL C. WESNER CE-10276 REGISTERED PROFESSIONAL ENGINEER

WASHETERIA AND WATER TANK
UTILIDOR DETAILS
CHEFORNAK, ALASKA

CE2 ENGINEERS, INC.
PO BOX 232048 ANCHORAGE, AK 99523 PH: 907-349-1010 FAX: 907-349-1015

REVISION	BY	DATE

Project No.
Date OCT. 2013
Designed PCW
Drawn CM
Approved PCW

Sheet No. C6.3
SHEET ___ OF ___

G:\ACAD\CHEFORNAK\2013 Washeteria and Water Tank\C6.3 Utilidor Details 2.dwg, 10/15/2013 3:05:28 PM, cmerz, \\Ce2main\LANIER MP C2050/LD520C PCL 6

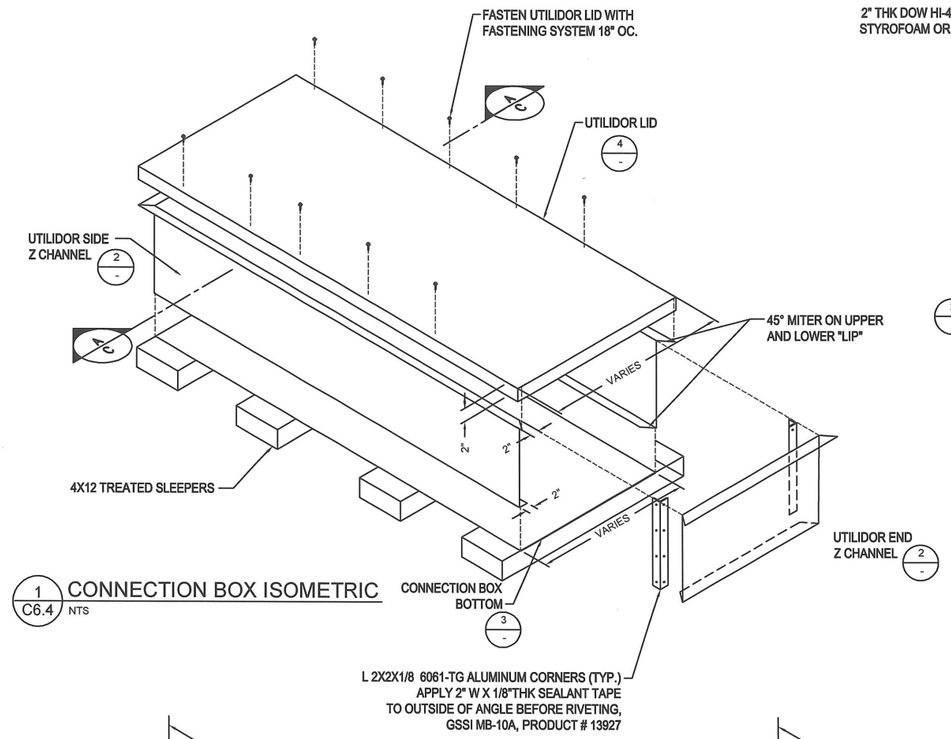

1 C6.4 CONNECTION BOX ISOMETRIC
NTS

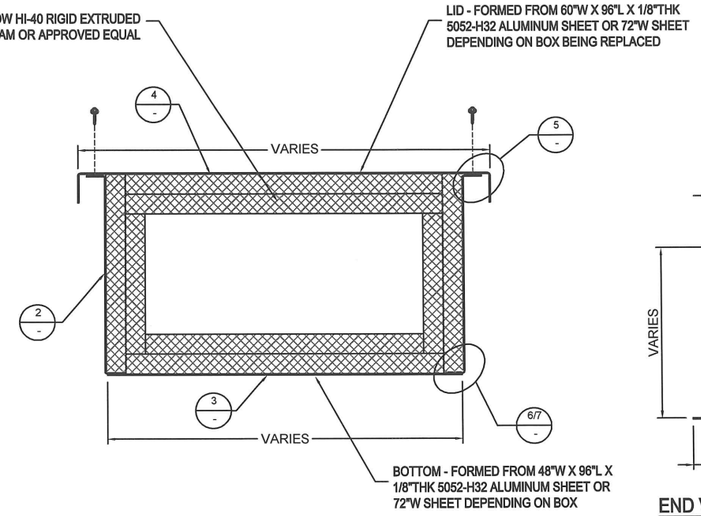

A C6.4 CONNECTION BOX SECTION
NTS

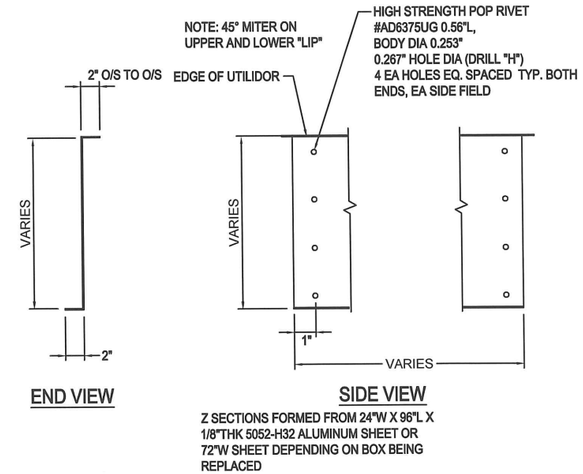

2 C6.4 SIDE & END Z-CHANNEL DETAILS
NTS

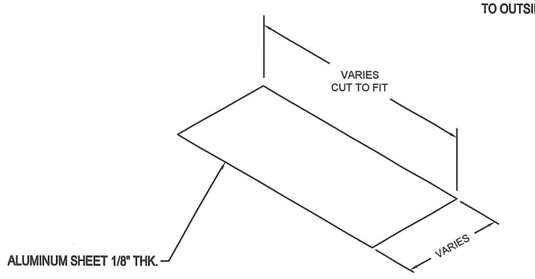

3 C6.4 BOTTOM SHEET DETAIL
NTS

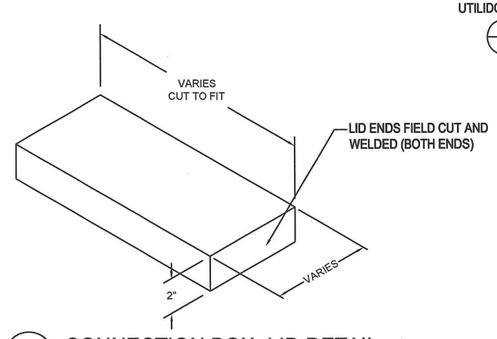

4 C CONNECTION BOX LID DETAIL
NTS

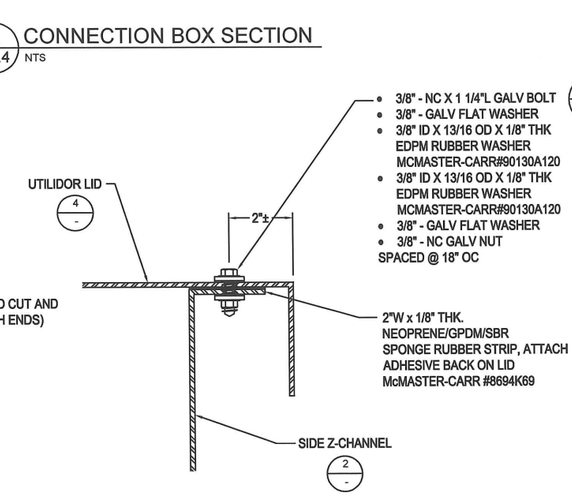

5 C6.4 TOP BOLTED DETAIL
NTS

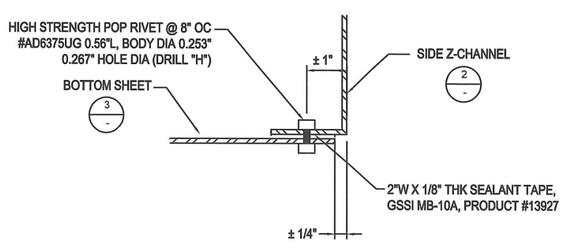

6 C6.4 BASE SEAM DETAIL (EXCEPT AT SLEEPERS)
NTS

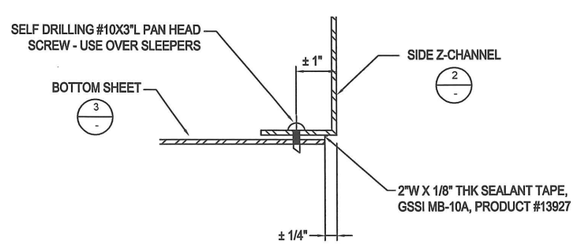

7 C6.4 BASE SEAM DETAIL (AT SLEEPERS)
NTS

NOTE:

1. ALL ALUMINUM SHALL BE 5052-H32 1/8" THICK, UNLESS OTHERWISE NOTED.
2. BOTTOM OF UTILIDOR WILL BE SEALED W/ 2"W X 1/8" THK SEALANT TAPE, GSSI MB-10A, PRODUCT #13927

RECORD DRAWING CERTIFICATE
THESE DRAWINGS REFLECT RECORDED INFORMATION OBTAINED DURING CONSTRUCTION. INFORMATION PROVIDED HEREIN IS ACCURATE TO THE BEST OF MY KNOWLEDGE.
NAME DATE

SCALE: AS SHOWN
BAR IS ONE INCH ON ORIGINAL DRAWING
0 1"
IF NOT ONE INCH ON THIS SHEET, ADJUST SCALE ACCORDINGLY

CONSTRUCTION RECORD
FIELD BOOK
STAKING
FOREMAN
AS-BUILT
INSPECTOR

STATE OF ALASKA 49TH REGISTERED PROFESSIONAL ENGINEER PAUL C. WESNER CE-10276
10/15/2013

2013 WATER DISTRIBUTION AND WATERING POINTS
CONNECTION BOX DETAILS
CHEFORNAK, ALASKA

CE2 ENGINEERS, INC.
PO BOX 232948 ANCHORAGE, AK 99523 PH: 907-349-1010 FAX: 907-349-1015

REVISION	BY	DATE

Project No. ____
Date APRIL 2013
Designed PCW
Drawn LAW
Approved PCW

Sheet No. C6.4
SHEET ____ OF ____

G:\ACAD\CHEFORNAK\2013 Washeteria and Water Tank\C6.4 CONNECTION BOX DETAILS.dwg, 10/15/2013 3:13:03 PM, cmerz, \\Ce2main\LANIER MP C2050/LD520C PCL 6

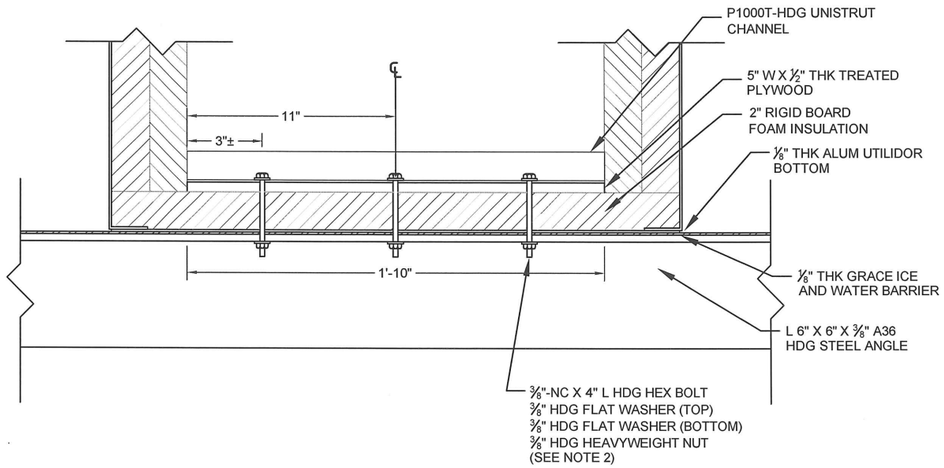

1 / C6.5 PIPE ANCHOR ASSEMBLY FASTENER LAYOUT
NTS

NOTES:

1. PLACE PIPE ANCHOR ASSEMBLY EVERY OTHER UTILIDOR SECTION (12' ± O.C.), AND BEFORE AND AFTER EACH UTILIDOR JUMP.
2. WHEN CONNECTING TO 4X12 SLEEPER REPLACE WITH ⅜" X 6" HDG LAG SCREW AND ⅜" HDG FLAT WASHER.
3. INSULATION AND PIPE CLAMPS NOT SHOWN ON FASTENER LAYOUT FOR CLARITY

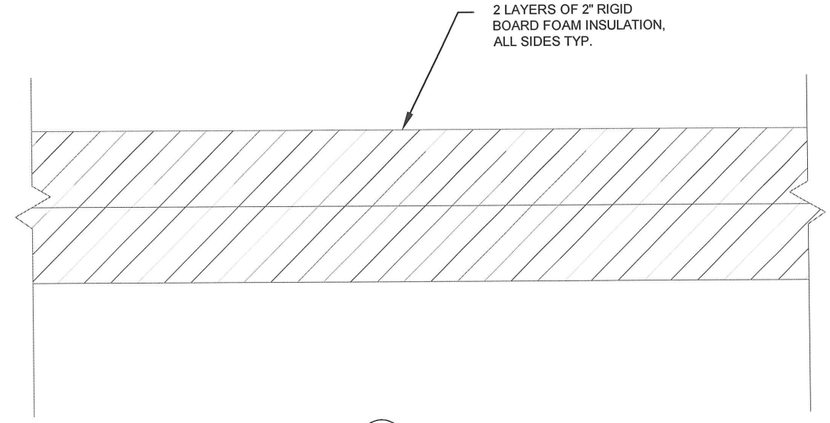

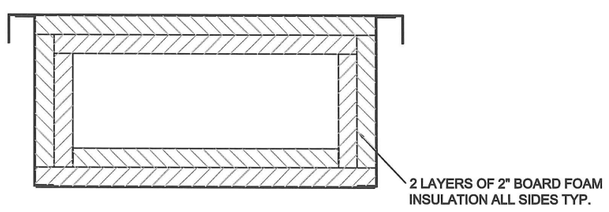

2 / C6.5 TYPICAL INSULATION LAYOUT
NTS

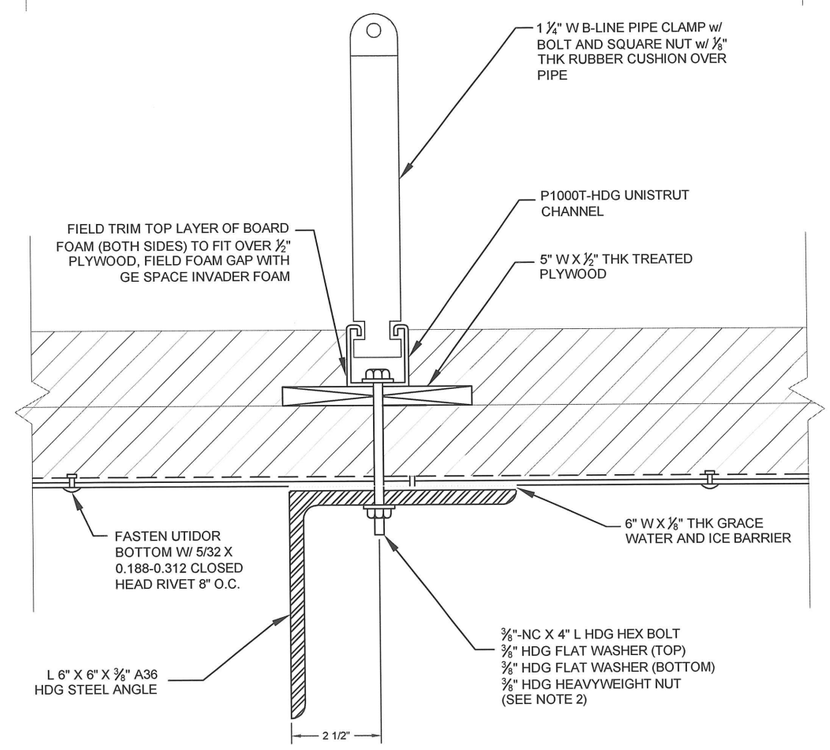

3 / C6.5 PIPE ANCHOR ASSEMBLY TYPICAL SECTION
NTS

RECORD DRAWING CERTIFICATE
THESE DRAWINGS REFLECT RECORDED INFORMATION OBTAINED DURING CONSTRUCTION. INFORMATION PROVIDED HEREIN IS ACCURATE TO THE BEST OF MY KNOWLEDGE.
NAME DATE

SCALE: AS SHOWN
BAR IS ONE INCH ON ORIGINAL DRAWING 0 1"
IF NOT ONE INCH ON THIS SHEET, ADJUST SCALES ACCORDINGLY

CONSTRUCTION RECORD
FIELD BOOK
STAKING
FOREMAN
AS-BUILT
INSPECTOR

STATE OF ALASKA 49TH PAUL C. WEBER CE-10276 REGISTERED PROFESSIONAL ENGINEER

WASHETERIA AND WATER TANK
UTILIDOR PIPE ANCHORING DETAILS
CHEFORNAK, ALASKA

CE2 ENGINEERS, INC.
PO BOX 232048 ANCHORAGE, AK 99523 PH: 907-349-1010 FAX: 907-349-1015

REVISION	BY	DATE

Project No. ____
Date OCT. 2013
Designed PCW
Drawn CM
Approved PCW

Sheet No. C6.5
SHEET ____ OF ____

G:\ACAD\CHEFORNAK\2013 Washeteria and Water Tank\C6.5 Utilidor Pipe Anchor Details.dwg, 10/15/2013 3:15:46 PM, cmerz, \\Ce2main\LANIER MP C2050/LD520C PCL 6

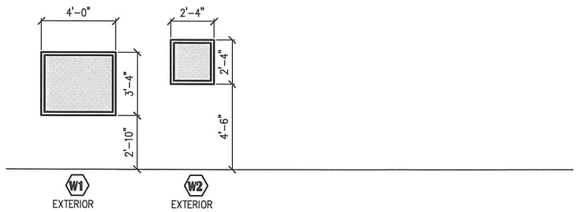

4 WINDOW SCHEDULE

SCALE: 1/4"=1'-0"

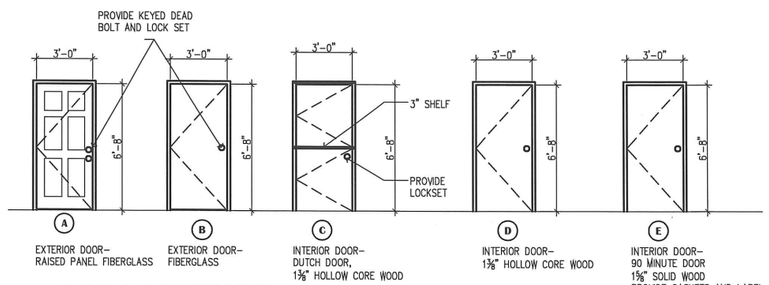

3 DOOR SCHEDULE

SCALE: 1/4"=1'-0"

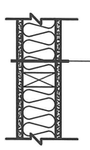

SOUND PARTITION ASSEMBLY

WALL ASSEMBLY
- 5/8" G.W.B. TYP "X"
- 2 x 4 WD. STUDS AT 16" O.C.
- SOUND BATT INSULATION
- 5/8" G.W.B. TYPE "X"

A — AS SHOWN

A1 — SIMILAR TO A – REPLACE 5/8" GWB TYPE "X" W/ 5/8" MOISTURE RESISTANT GWB (WET SIDE)

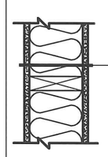

SOUND PARTITION ASSEMBLY

WALL ASSEMBLY
- 5/8" G.W.B. TYP "X"
- 2 x 6 WD. STUDS AT 16" O.C.
- SOUND BATT INSULATION
- 5/8" G.W.B. TYPE "X"

B — AS SHOWN

B1 — SIMILAR TO B – REPLACE 5/8" GWB TYPE "X" W/ 5/8" MOISTURE RESISTANT GWB (WET SIDE)

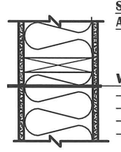

SOUND PARTITION ASSEMBLY

WALL ASSEMBLY
- 5/8" MOISTURE RESISTANT GWB (WET SIDE)
- 2 x 8 WD. STUDS AT 16" O.C.
- SOUND BATT INSULATION
- 5/8" G.W.B. TYPE "X"

C — AS SHOWN

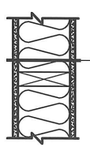

1 HOUR FIRE BARRIER UL #U419

WALL ASSEMBLY
- 5/8" G.W.B. TYPE "X" (FIRE TAPE)
- 2 x 6 WOOD STUDS AT 16" O.C.
- SOUND BATT INSULATION
- 5/8" G.W.B. TYPE "X" (FIRE TAPE)

D — AS SHOWN

NOTE:
INSTALL SMOKE/FIRE STOPPING AT TOP AND BOTTOM OF WALL (BOTH SIDES) & AROUND ALL PENETRATIONS. FIRE CAULK ALL PENETRATIONS.

2 WALL TYPES

SCALE: 1"=1'-0"

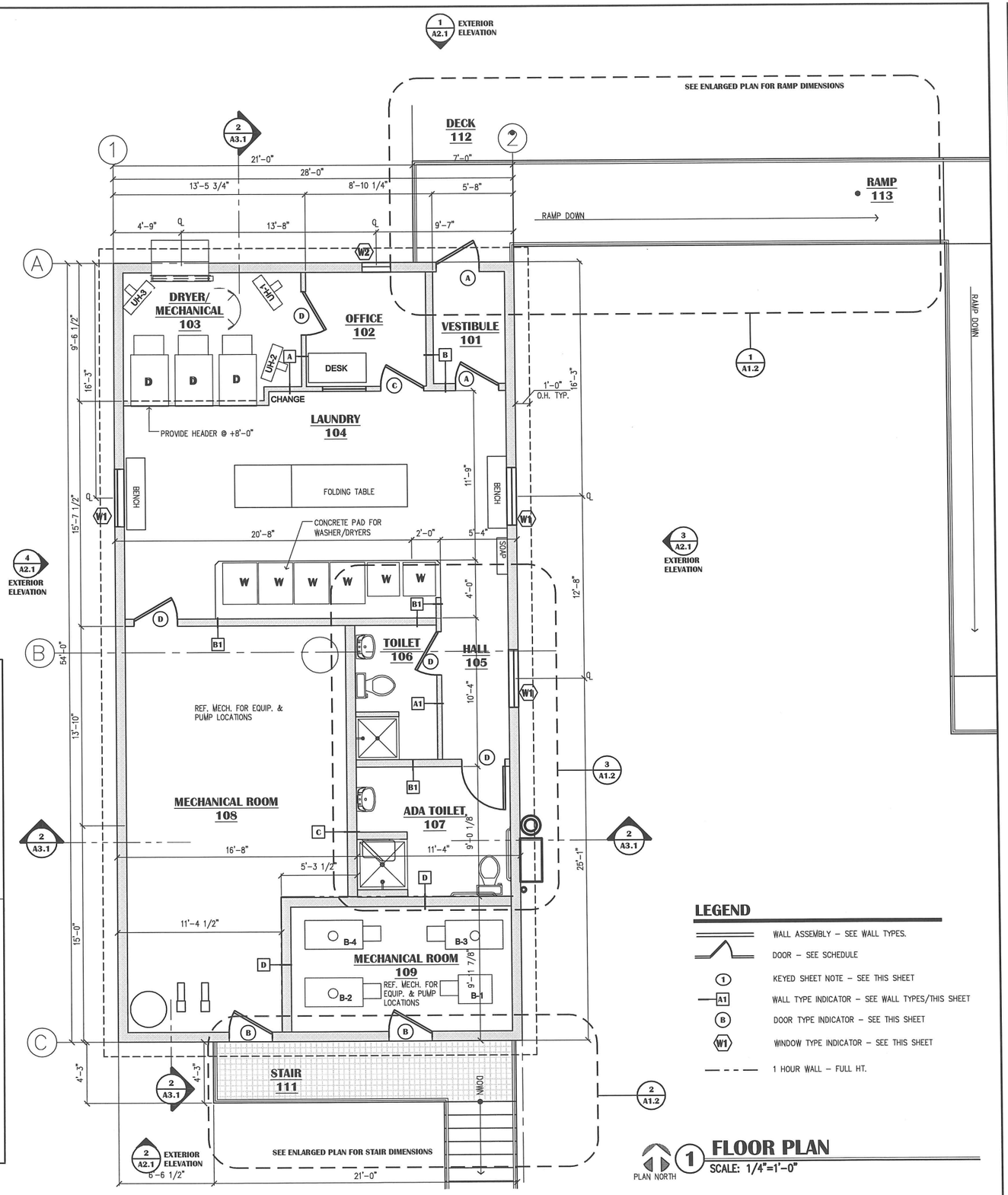

1 FLOOR PLAN

SCALE: 1/4"=1'-0"

LEGEND

- WALL ASSEMBLY – SEE WALL TYPES.
- DOOR – SEE SCHEDULE
- (1) KEYED SHEET NOTE – SEE THIS SHEET
- (A1) WALL TYPE INDICATOR – SEE WALL TYPES/THIS SHEET
- (B) DOOR TYPE INDICATOR – SEE THIS SHEET
- (W1) WINDOW TYPE INDICATOR – SEE THIS SHEET
- 1 HOUR WALL – FULL HT.

65% DOCUMENTS

Envision ARCHITECTURE
1231 Gambell Ste. 400
Anchorage, Alaska 99501
907-349-1425

SCALE: AS SHOWN

BAR IS ONE INCH ON ORIGINAL DRAWING 0 1"

IF NOT ONE INCH ON THIS SHEET, ADJUST SCALES ACCORDINGLY

CONSTRUCTION RECORD
FIELD BOOK
STAKING
FOREMAN
AS-BUILT
INSPECTOR

WASHETERIA AND WATER TANK

WASHETERIA FLOOR PLAN

CHEFORNAK, ALASKA

CE2 ENGINEERS, INC.
PO BOX 232246 ANCHORAGE, AK 99523 PH: 907-349-1010 FAX: 907-349-1015

REVISION	BY	DATE

Project No.
Date September 2013
Designed BT
Drawn CV
Approved BT

Sheet No. A1.1
SHEET ___ OF ___

G:\ACAD\CHEFORNAK\2013 Washeteria and Water Tank\xA1.1 FLOOR PLAN_CE2_revised.dwg, 10/15/2013 3:18:43 PM, cmerz, \\Ce2main\LANIER MP C2050/LD520C PCL 6

ROOM FINISH SCHEDULE

NO.	ROOM NAME	FLOOR		WALLS									CEILING				REMARKS
	WALL DESIGNATIONS GENERALLY CORRESPOND TO THE FOLLOWING ROOM ELEVATIONS: "A" = NORTH "B" = EAST "C" = SOUTH "D" = WEST			BASE	WALL "A"		WALL "B"		WALL "C"		WALL "D"						
		MATERIAL	FINISH	DESIGNATION	MATERIAL	FINISH	MATERIAL	FINISH	MATERIAL	FINISH	MATERIAL	FINISH	MATERIAL	FINISH	FIRE RATING	HEIGHT	
101	VESTIBULE	PLYWD	SV	RB	GWB	PT	GWB	PT	GWB	PT	GWB	PT	GWB	PT	--	--	--
102	OFFICE	PLYWD	CPT	RB	GWB	PT	GWB	PT	GWB	PT	GWB	PT	GWB	PT	--	--	--
103	DRYER/MECHANICAL	PLYWD	SV	RB	GWB	PT	GWB	PT	GWB	PT	GWB	PT	GWB	PT	--	--	--
104	LAUNDRY	PLYWD	SV	RB	GWB	PT	GWB	PT	GWB	PT	GWB	PT	GWB	PT	--	--	--
105	HALL	PLYWD	SV	RB	--	--	GWB	PT	GWB	PT	GWB	PT	GWB	PT	--	--	--
106	TOILET	PLYWD	SV	COVE	GWB	RSV/PT	GWB	RSV/PT	GWB	RSV/PT	GWB	RSV/PT	GWB	PT	--	--	NOTE 1
107	ADA TOILET	PLYWD	SV	COVE	GWB	RSV/PT	GWB	RSV/PT	GWB	RSV/PT	GWB	RSV/PT	GWB	PT	--	--	NOTE 1
108	MECHANICAL ROOM	PLYWD	SV	RB	GWB	PT	GWB	PT	GWB	PT	GWB	PT	GWB	PT	--	--	--
109	MECHANICAL ROOM	PLYWD	SV	RB	GWB	PT	GWB	PT	GWB	PT	GWB	PT	GWB	PT	1 HR.	--	--
110	STORAGE	PLYWD	SV	RB	GWB	PT	GWB	PT	GWB	PT	--	--	GWB	PT	1 HR.	--	--

NOTES:

1. PROVIDE A 4'-0" RSV WAINSCOT

ABBREVIATIONS:

PT = PAINT
FF = FACTORY FINISH
PLYWD = PLYWOOD
WD = WOOD
SV = SHEET VINYL
CPT = CARPET
RB = RUBBER BASE
GWB = GYPSUM WALLBOARD

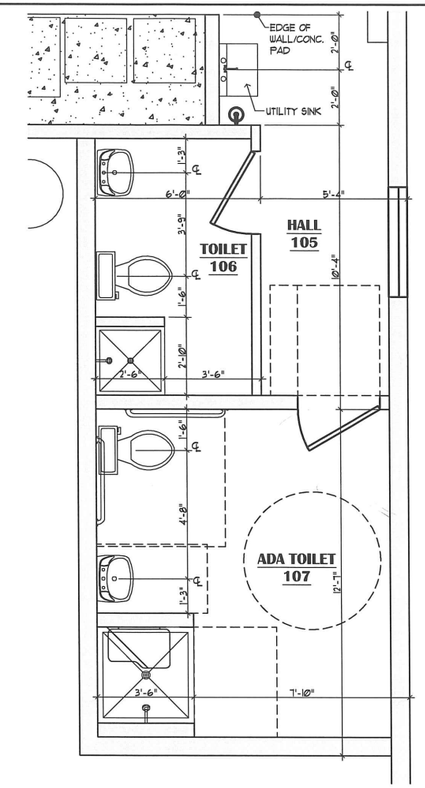

3 ENLARGED FLOOR PLAN

SCALE: 3/8"=1'-0"

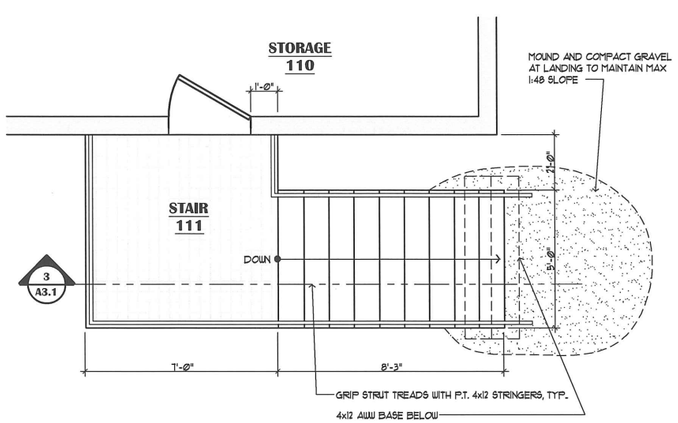

2 ENLARGED STAIR

SCALE: 3/8"=1'-0"

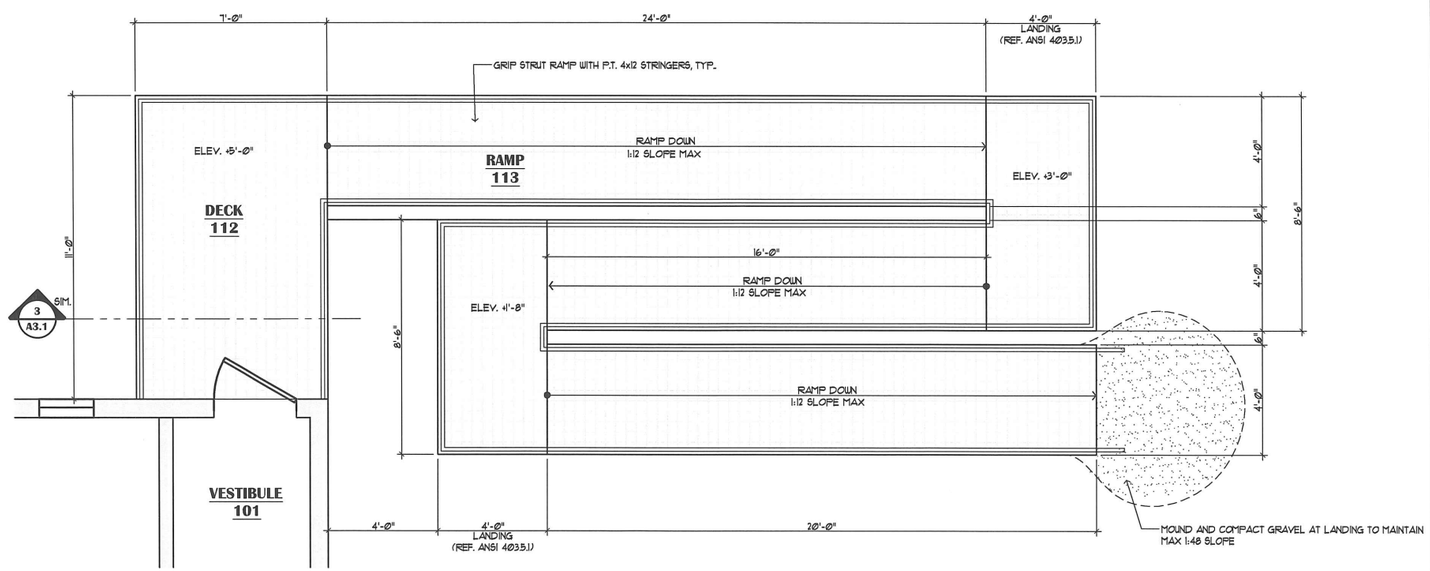

1 ENLARGED RAMP

SCALE: 3/8"=1'-0"

65% DOCUMENTS

Envision ARCHITECTURE
12261 Greenville Blvd. #103
Anchorage, Alaska 99515
907-349-1421

SCALE: AS SHOWN

BAR IS ONE INCH ON ORIGINAL DRAWING
0 1"

IF NOT ONE INCH ON THIS SHEET, ADJUST SCALES ACCORDINGLY

CONSTRUCTION RECORD
FIELD BOOK
STAKING
FOREMAN
AS-BUILT
INSPECTOR

WASHETERIA AND WATER TANK

WASHETERIA ENLARGED FLOOR PLANS

CHEFORNAK, ALASKA

CE2 ENGINEERS, INC.
PO BOX 220246 ANCHORAGE, AK 99520 PH: 907-349-1011 FAX: 907-349-1015

REVISION	BY	DATE

Project No.
Date September 2013
Designed BT
Drawn CV
Approved BT

Sheet No. A1.2

SHEET ____ OF ____

KEYED SHEET NOTES:

1. SNOW GUARDS

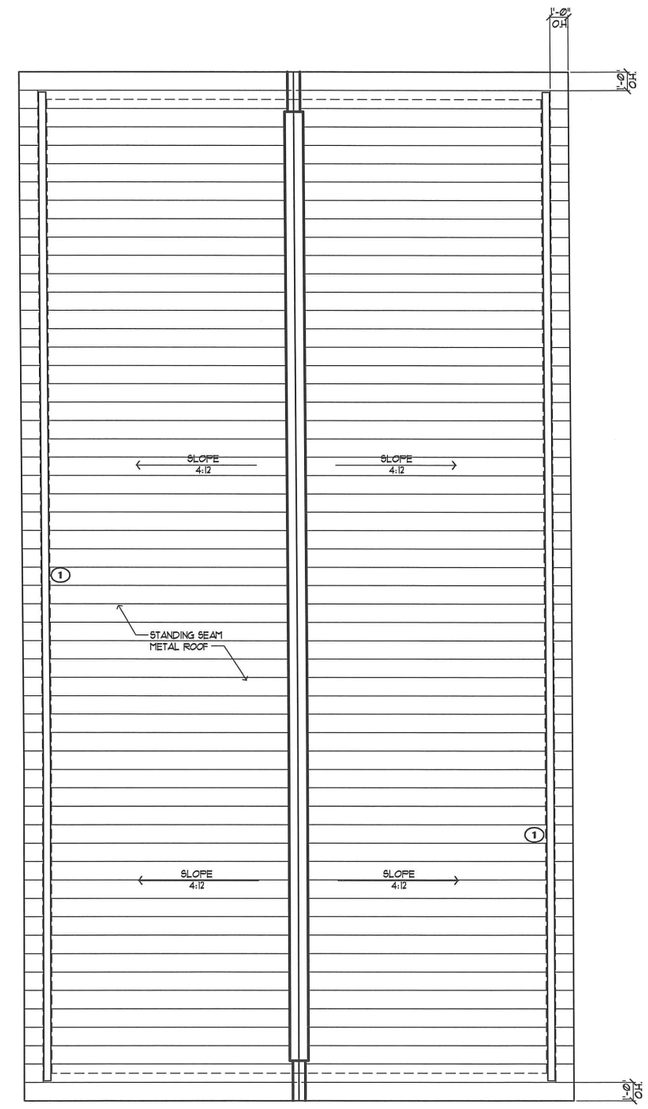

1 ROOF PLAN

SCALE: 1/4"=1'-0"

65% DOCUMENTS

Avision ARCHITECTURE
1501 Gambell Ste. 402
Anchorage, Alaska 99501
907-349-1402

SCALE: AS SHOWN

BAR IS ONE INCH ON ORIGINAL DRAWING
0 1"
IF NOT ONE INCH ON THIS SHEET, ADJUST SCALES ACCORDINGLY

CONSTRUCTION RECORD

FIELD BOOK	
STAKING	
FOREMAN	
AS-BUILT	
INSPECTOR	

WASHETERIA AND WATER TANK

WASHETERIA ROOF PLAN

CHEFORNAK, ALASKA

CE2 ENGINEERS, INC.
PO BOX 220646 ANCHORAGE, AK 99522 PH: 907-349-1019 FAX: 907-349-1015

REVISION	BY	DATE

Project No.
Date September 2013
Designed BT
Drawn CV
Approved BT

Sheet No. A1.3

SHEET ____ OF ____

MATERIAL LEGEND

1. METAL ROOFING
2. METAL SIDING
3. SNOW CLEATS
4. CHAIN LINK SKIRT
5. METAL FASCIA/SOFFIT
6. VINYL WINDOW

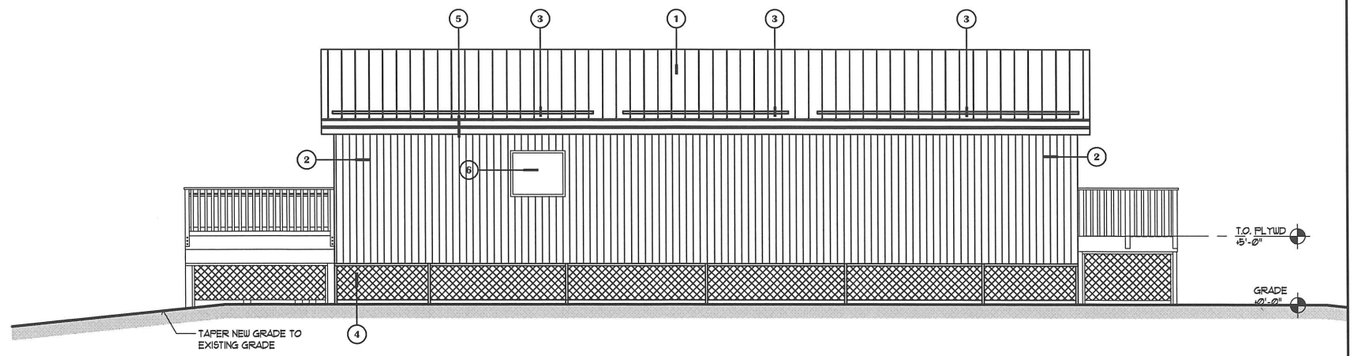

4 EXTERIOR ELEVATION
SCALE: 3/16"=1'-0"

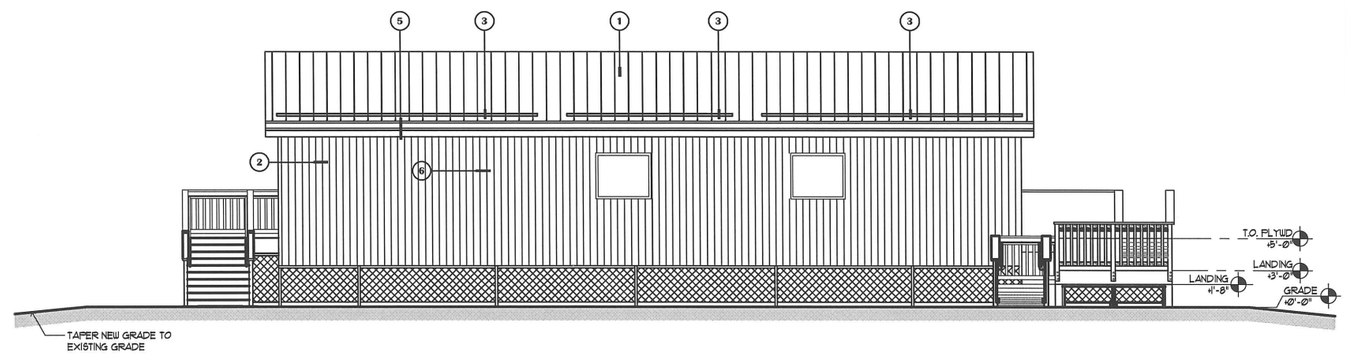

3 EXTERIOR ELEVATION
SCALE: 3/16"=1'-0"

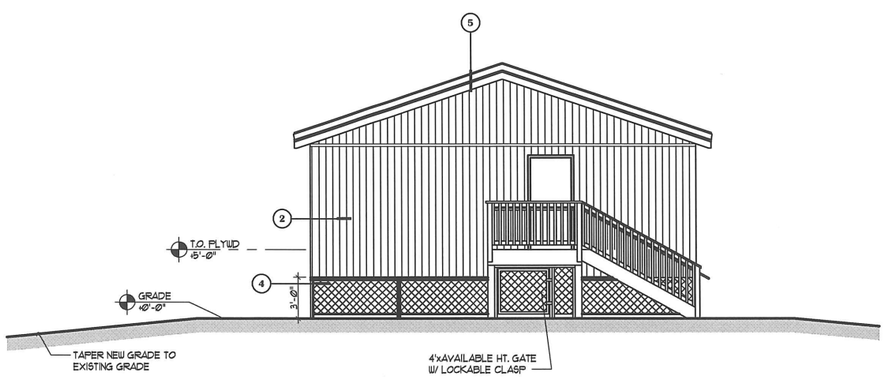

2 EXTERIOR ELEVATION
SCALE: 3/16"=1'-0"

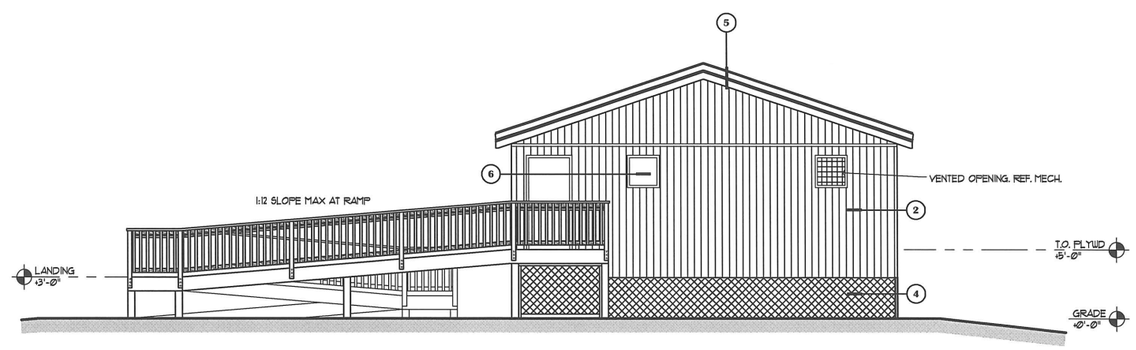

1 EXTERIOR ELEVATION
SCALE: 3/16"=1'-0"

65% DOCUMENTS

Envision ARCHITECTURE
2231 Gambell Ste 400
Anchorage, Alaska 99501
907.349.1422

SCALE: AS SHOWN

BAR IS ONE INCH ON ORIGINAL DRAWING
0 1"
IF NOT ONE INCH ON THIS SHEET, ADJUST SCALES ACCORDINGLY

CONSTRUCTION RECORD
FIELD BOOK
STAKING
FOREMAN
AS-BUILT
INSPECTOR

WASHETERIA AND WATER TANK

WASHETERIA
EXTERIOR ELEVATIONS

CHEFORNAK, ALASKA

CE2 ENGINEERS, INC.
PO BOX 230246 ANCHORAGE, AK 99523 PH: 907-345-1010 FAX: 907-345-1015

REVISION	BY	DATE

Project No.
Date September 2013
Designed BT
Drawn CV
Approved BT

Sheet No. A2.1
SHEET ____ OF ____

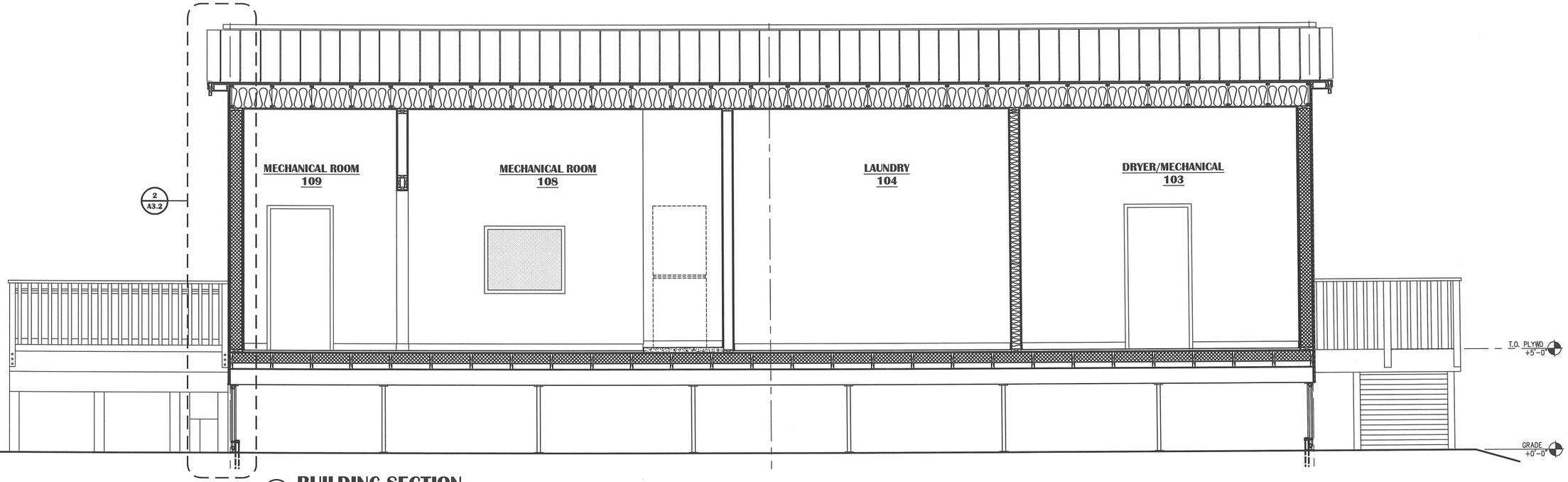

2 BUILDING SECTION
SCALE: 3/8""=1'-0"

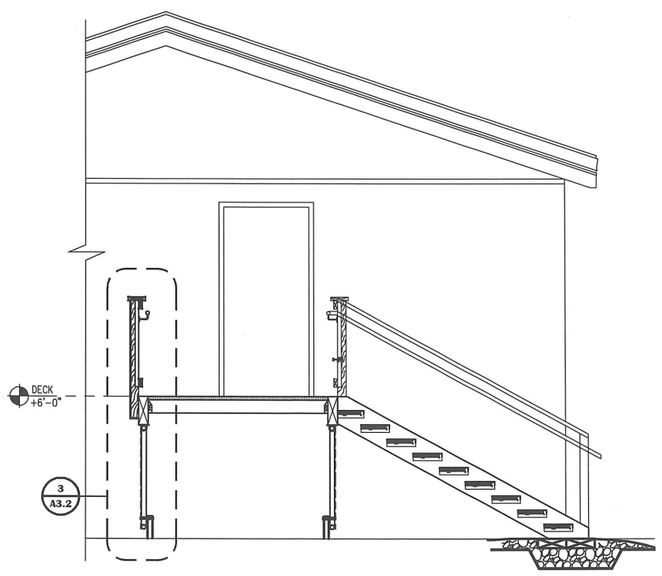

3 STAIR SECTION
SCALE: 3/8""=1'-0"

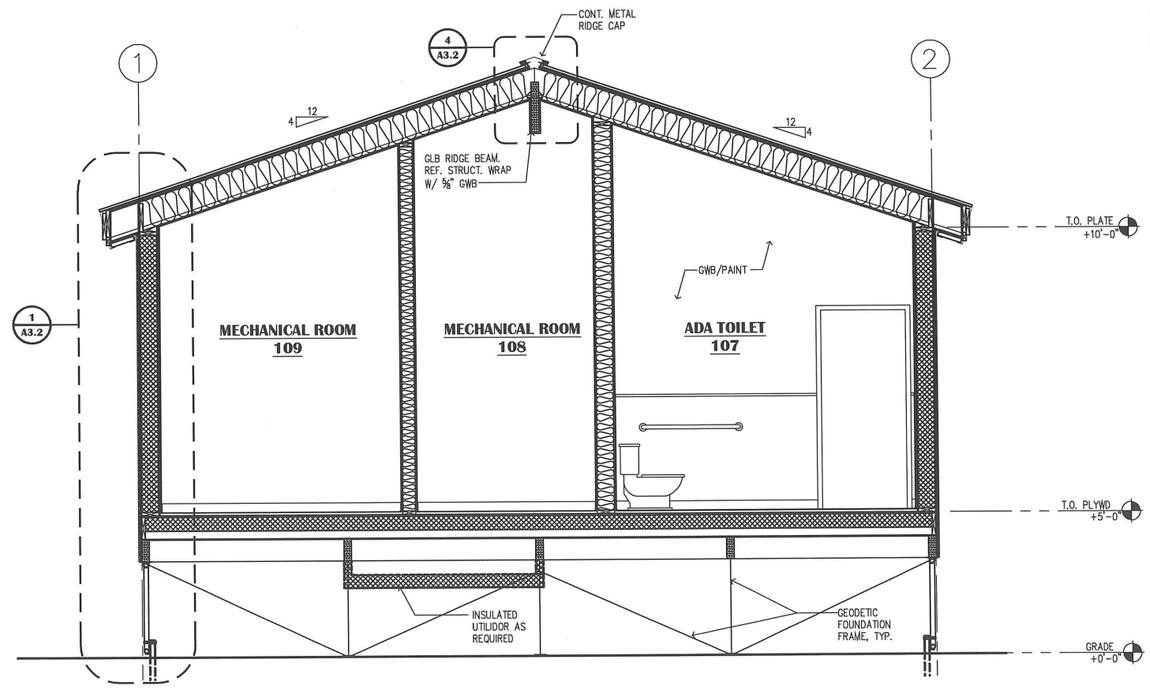

1 BUILDING SECTION
SCALE: 3/8""=1'-0"

65% DOCUMENTS

Invision ARCHITECTURE
1231 Gambell Ste. 400
Anchorage, Alaska 99501
907-349-1425

SCALE: AS SHOWN

BAR IS ONE INCH ON ORIGINAL DRAWING 0 1"

IF NOT ONE INCH ON THIS SHEET, ADJUST SCALE ACCORDINGLY

CONSTRUCTION RECORD
FIELD BOOK
STAKING
FOREMAN
AS-BUILT
INSPECTOR

WASHETERIA AND WATER TANK

WASHETERIA BUILDING SECTIONS

CHEFORNAK, ALASKA

CE2 ENGINEERS, INC.
PO BOX 232048 ANCHORAGE, AK 99523 PH: 907-349-1010 FAX: 907-349-1015

REVISION	BY	DATE

Project No.
Date September 2013
Designed BT
Drawn CV
Approved BT

Sheet No. A3.1
SHEET ___ OF ___

G:\ACAD\CHEFORNAK\2013 Washeteria and Water Tank\From Others\InvisionArch\A3.1-Sections.dwg, 10/15/2013 3:17:49 PM, cmerz, \\Ce2main\LANIER MP C2050/LD520C PCL 6

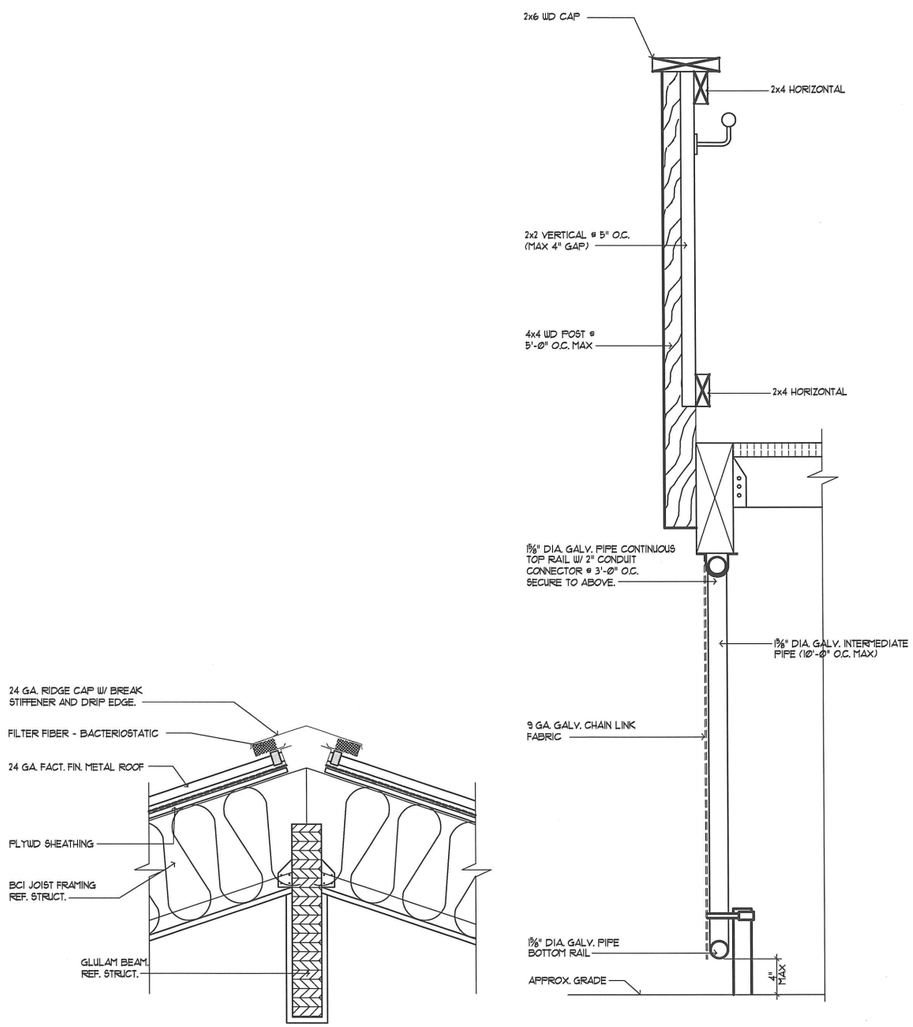

4 **DETAIL**
SCALE: 1 1/2"=1'-0"

3 **STAIR DETAIL**
SCALE: 1 1/2"=1'-0"

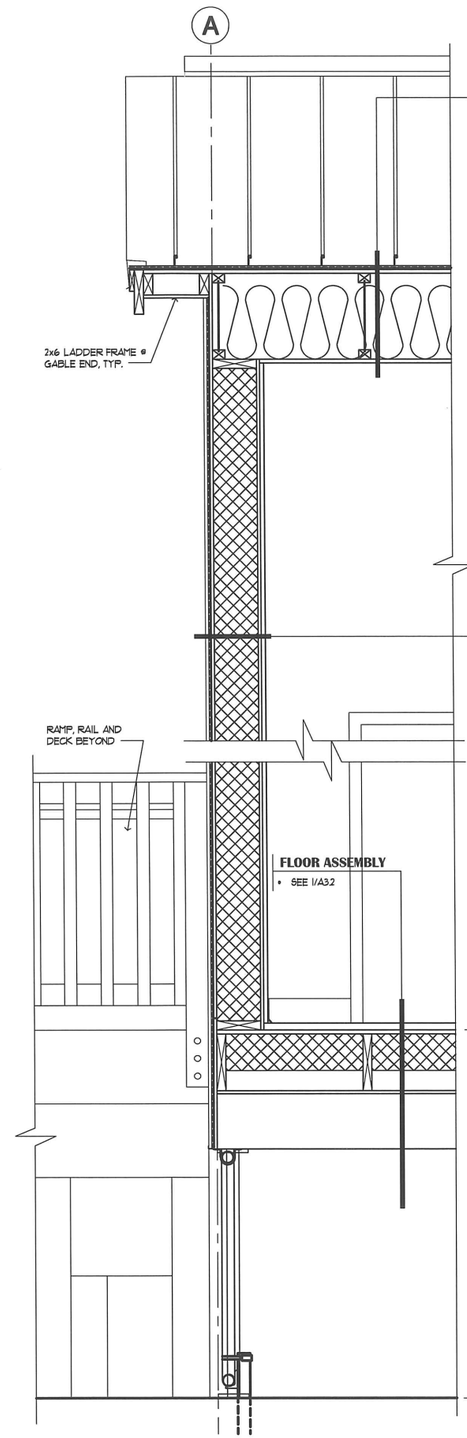

2 **WALL SECTION**
SCALE: 1"=1'-0"

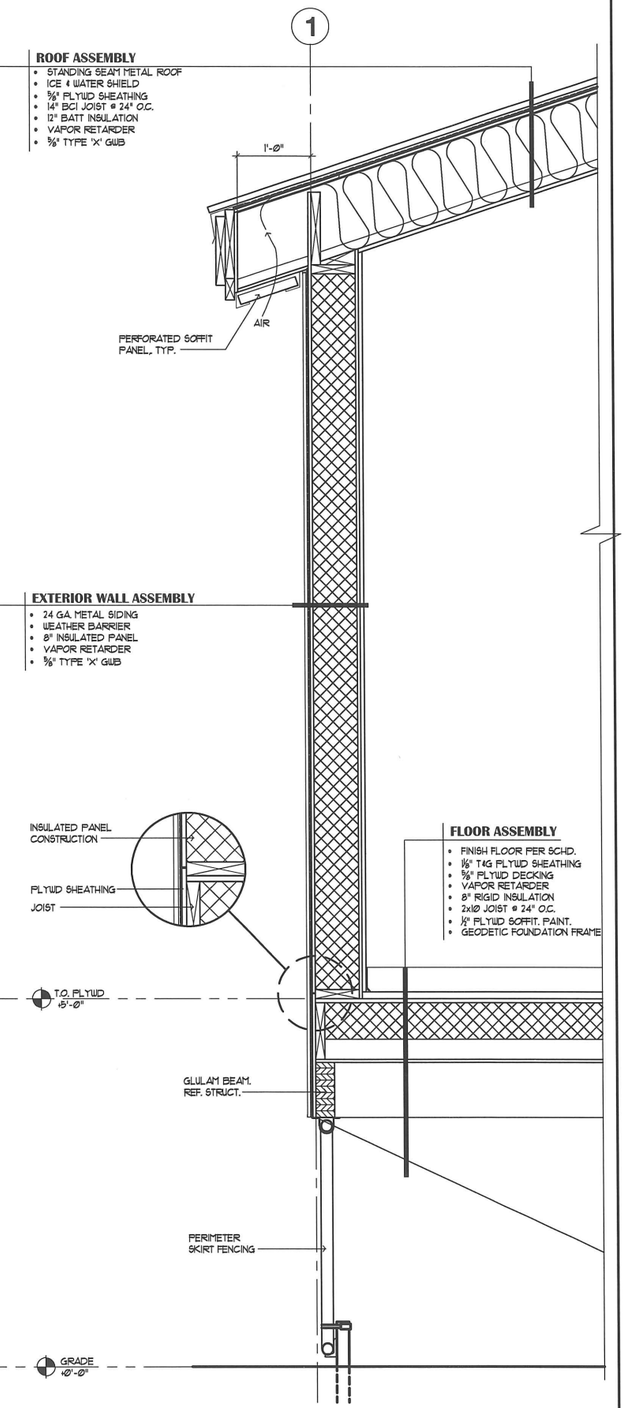

1 **WALL SECTION**
SCALE: 1"=1'-0"

65% DOCUMENTS

Avision ARCHITECTURE
1229 E. Dimond Blvd. #201
Anchorage, Alaska 99515
907.349.1929

SCALE: AS SHOWN

BAR IS ONE INCH ON ORIGINAL DRAWING
0 1"
IF NOT ONE INCH ON THIS SHEET, ADJUST SCALES ACCORDINGLY

CONSTRUCTION RECORD
FIELD BOOK
STAKING
FOREMAN
AS-BUILT
INSPECTOR

WASHETERIA AND WATER TANK
WASHETERIA WALL SECTIONS
CHEFORNAK, ALASKA

CE2 ENGINEERS, INC.
PO BOX 220346 ANCHORAGE, AK 99522 PH: 907-345-1015 FAX: 907-345-1015

REVISION	BY	DATE

Project No.
Date September 2013
Designed BT
Drawn CV
Approved BT

Sheet No. A3.2
SHEET ___ OF ___

STRUCTURAL NOTES

THE CONTRACTOR SHALL VERIFY AND COORDINATE ALL DIMENSIONS AMONG THE DRAWINGS BEFORE STARTING ANY WORK OR FABRICATION. ANY DISCREPANCIES FOUND AMONG THE DRAWINGS, SITE CONDITIONS, SPECIFICATIONS AND THESE NOTES SHALL BE REPORTED TO THE ARCHITECT/ ENGINEER AT ONCE.

ALL CONSTRUCTION SHALL COMPLY WITH THE 2006 INTERNATIONAL BUILDING CODE (IBC) AS AMENDED BY THE LOCAL BUILDING OFFICIAL.

SAFETY - THE CONTRACTOR IS RESPONSIBLE FOR MEETING ALL OSHA AND DOSH SAFETY STANDARDS. THE CONTRACTOR IS IN CHARGE OF ALL SAFETY MATTERS ON AND AROUND THE JOB SITE. PROVIDE TEMPORARY ERECTION BRACING AND SHORING AS REQUIRED FOR STABILITY OF THE STRUCTURE DURING ALL PHASES OF CONSTRUCTION.

CODE
2006 INTERNATIONAL BUILDING CODE (IBC)

DESIGN LIVE LOADS

FLOOR LOADS - SEE DESIGN LOAD SCHEDULE SHEET S-1.1
MINIMUM ROOF LIVE LOAD = 20 PSF

SNOW

GROUND SNOW LOAD = 50 PSF
ROOF SNOW LOAD = 40 PSF
SNOW EXPOSURE FACTOR, Ce = 0.90
SNOW LOAD IMPORTANCE FACTOR = 1.0
THERMAL FACTOR, Ct = 1.0

WIND DESIGN DATA

VELOCITY = 130 MPH HOUR 3 SECOND GUST
IMPORTANCE FACTOR, Iw = 1.0
EXPOSURE C
INTERNAL PRESSURE COEFFICIENT, GCpi = ± 0.18
COMPONENTS AND CLADDING PRESSURES,
ROOF
ZONE 3 - WITHIN 8' OF CORNERS = 92.3 PSF
ZONE 2 - WITHIN 8' OF EAVE AND PEAK = 62.4 PSF
ZONE 1 - EVERYWHERE ELSE = 36.0 PSF
WALLS
ZONE 5 - WITHIN 8' OF VERTICAL CORNERS = 52.5 PSF
ZONE 4 - EVERYWHERE ELSE = 42.6 PSF

SEISMIC DESIGN DATA

Ie = 1.0
Ss = 1.08g, S1 = 0.06g, SDS = .116, SD1 = 0.09
SITE CLASS D
SEISMIC DESIGN CATEGORY D
SEISMIC RESISTING SYSTEM = BEARING WALL, PLYWOOD SHEARWALLS, R = 6.5
SEISMIC BASE SHEAR = Vs= 34.3 KIPS Cs = 0.11
EQUIVALENT LATERAL FORCE PROCEDURE

FOUNDATION DESIGN

FOUNDATION DESIGN IS BASED ON AN ASSUMED 1500 PSF SOIL BEARING PRESSURE ON A PREPARED PAD LEVEL AND STABLE FROM ANY SEASONAL FROST ACTION.
TRIODETIC DESIGN BY OTHERS.

WOOD PRODUCTS

ALL LUMBER SHALL BE A MINIMUM OF HF#2 FOR ALL BRIDGING, BLOCKING AND FRAMING REQUIRED. MINIMUM FASTENING TO BE PER IBC TABLE 2304.9.1 UNLESS SPECIFICALLY NOTED IN THESE DRAWINGS. PROVIDE POSITIVE CONNECTION UTILIZING SIMPSON HANGERS OR FRAMED BEAM POCKETS TO RESIST VERTICAL AND LATERAL LOADING AT ALL POST CAPS AND BASES, BEARING WALLS.

PLATE CONNECTED TRUSSES - PROVIDE ENGINEERED SHOP DRAWINGS AND CALCULATIONS STAMPED BY AN ALASKAN LICENSED PROFESSIONAL ENGINEER, REVIEWED FOR CONFORMANCE BY THE CONTRACTOR, TO THE OWNER FOR APPROVAL PRIOR TO FABRICATION AND INSTALLATION. PROVIDE FULL DEPTH PROPERLY VENTED BLOCKING AT ALL SUPPORTS. NAIL ROOF SHEATHING TO BLOCKS WITH 10d'S @ 3" O.C., FASTEN BLOCKS TO PLATE WITH 16d TOE NAILS @ 6" O.C. PLUS A SIMPSON A35, PROVIDE TRUSS WEB BRIDGING WHERE INDICATED ON THE SHOP DRAWINGS, AND TIE THIS BRIDGING WITH DIAGONAL X-BRACING. BRACE GABLE END TRUSSES PER THE TRUSS PLATE INSTITUTE TPI/HIB AND DETAILS ON THE PLANS. DESIGN PER ROOF DESIGN LOADS ON S-1.1, PROVIDE BOTTOM CHORD DEAD LOAD OF 10 PSF, TOP CHORD DEAD LOAD OF 15 PSF. MAXIMUM DEFLECTION OF L/360 OR 1", WHICHEVER IS LESS. CONTRACTOR TO PROVIDE FOR ANTICIPATED TRUSS UPLIFT @ INTERIOR WALLS DUE TO TRUSS SHRINKAGE IN COLD WEATHER W/ STC CLIPS AND SHEETROCK FASTENING.

WOOD I- JOISTS - PROVIDE WOOD I JOISTS AS MANUFACTURED BY BOISE CASCADE, TRUSS JOIST, ROSEBURG OR EQUAL. PROVIDE FULL DEPTH SOLID BLOCKING AT ALL SUPPORTS. COORDINATE ALL HANGERS WITH ACTUAL JOIST SIZE. SUBMIT CONTRACTOR CHECKED ENGINEER SHOP DRAWINGS STAMPED BY AN ALASKAN LICENSED PROFESSIONAL ENGINEER PRIOR TO FABRICATION AND INSTALLATION.

FLOOR SHEATHING - USE APA RATED SHEATHING, TONGUE AND GROOVE, USE 40/20 SPAN RATING.

GLU LAM BEAMS SHALL BE 24F DF/HF WITH Fb=2,400 psi. USE V4 FOR SIMPLE SPANS AND V8 FOR CANTILEVERS OR BEAMS CONTINUOUS OVER SUPPORTS.

ROOF SHEATHING: USE APA RATED SHEATHING. UPPER ROOF SHEATHING WITH SUPPORTS @ 24" O.C. USE MINIMUM 5/8" SHEATHING WITH A 24/16 SPAN RATING, FOR LOWER ROOFS SUBJECT TO SLIDING AND/OR DRIFTING SNOW, USE 3/4" SHEATHING WITH A SPAN RATING OF 40/20.

WALL SHEATHING: USE APA RATED SHEATHING. PROTECT SHEATHING FROM THE WEATHER UNLESS IT IS RATED FOR EXTERIOR EXPOSURE. PROVIDE FRAMING OR BLOCKING BEHIND ALL PANEL EDGES. PROVIDE MINIMUM 3/8" FROM EDGE TO CENTER OF NAIL. DRIVE NAILS FLUSH, DO NOT OVERDRIVE FASTENERS. PROVIDE FASTENERS PER SHEARWALL SCHEDULE.

ALL WOOD IN CONTACT WITH CONCRETE OR EXPOSED TO THE WEATHER SHALL BE PRESERVATIVE TREATED IN ACCORDANCE WITH AMERICAN WOOD PRESERVATIVE ASSOCIATION. PROVIDE PRESSURE TREATED FOUNDATION SILL PLATES, PROVIDE 3X3X.229" MIN. PLATE WASHERS FOR FOUNDATION ANCHOR BOLTS.

DESIGN LOAD SCHEDULE

	DESCRIPTION	SUPERIMPOSED DEAD LOAD (PSF)	LIVE LOAD (PSF)
1	ROOF BALANCED SNOW LOAD	15	40
2	FLOOR LOAD OFFICE	10	50
3	FLOOR LOAD ASSEMBLY AREA, CORRIDORS AND EXITS	10	100

ABBREVIATIONS

E.W. - EACH WAY
IBC - INTERNATIONAL BUILDING CODE
I.S. - INSIDE
O.S. - OUTSIDE
F.O.S. - FACE OF STUD
HDG - HOT DIP GALVANIZED
MFG - MANUFACTURER
FFA - POST FROM ABOVE
SIM. - SIMILAR TO
SIP - STRUCTURAL INSULATED PANELS
TYP. - TYPICAL
UNO - UNLESS NOTED OTHERWISE
W.ITE. - WITH THE EXCEPTION
W.W.M. - WELDED WIRE MESH

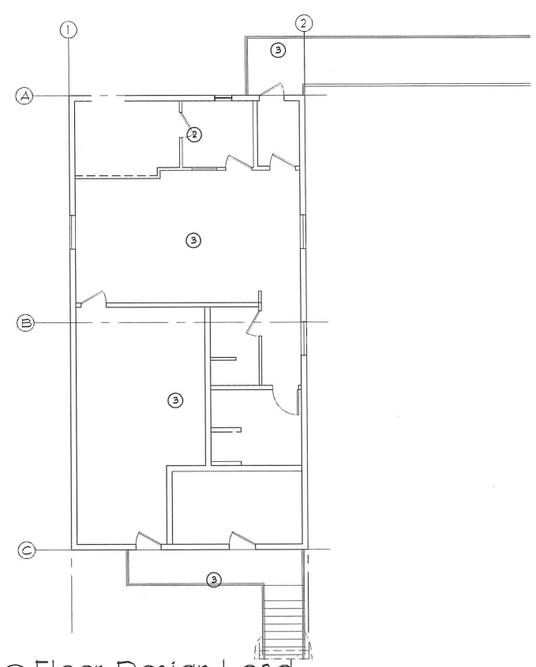

1 S0.1 Floor Design Load
Scale: 1/8" = 1'-0"

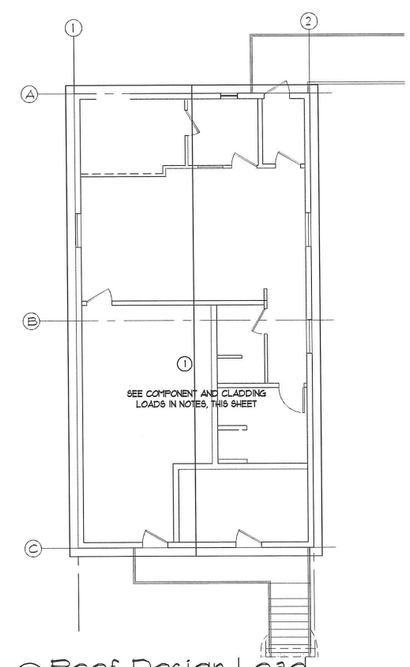

2 S0.1 Roof Design Load
Scale: 1/8" = 1'-0"

65% DOCUMENTS

Olen Associates, Inc.
Construction Management Engineering Inspections
Phone: (907) 424-2501
Fax: (907) 424-2502
email: bolen@gci.net
16922 Hinson Drive
Eagle River, AK 99577

SCALE: AS SHOWN
BAR IS ONE INCH ON ORIGINAL DRAWING
0 1"
IF NOT ONE INCH ON THIS SHEET, ADJUST SCALES ACCORDINGLY

CONSTRUCTION RECORD
FIELD BOOK
STAKING
FOREMAN
AS-BUILT
INSPECTOR

STATE OF ALASKA
BRIAN C. FIELDING
49th
CE-911
REGISTERED PROFESSIONAL ENGINEER
FOR REVIEW ONLY
FOR CONSTRUCTION

WASHETERIA AND WATER TANK
STRUCTURAL NOTES
CHEFORNAK, ALASKA

CE2 ENGINEERS, INC.
PO BOX 232246 ANCHORAGE, AK 99523 PH: 907-349-1010 FAX: 907-349-1015

REVISION	BY	DATE

Project No. 324888
Date 10/14/13
Designed BCO
Drawn RRJ
Approved OJA

Sheet No. S0.1
SHEET ____ OF ____

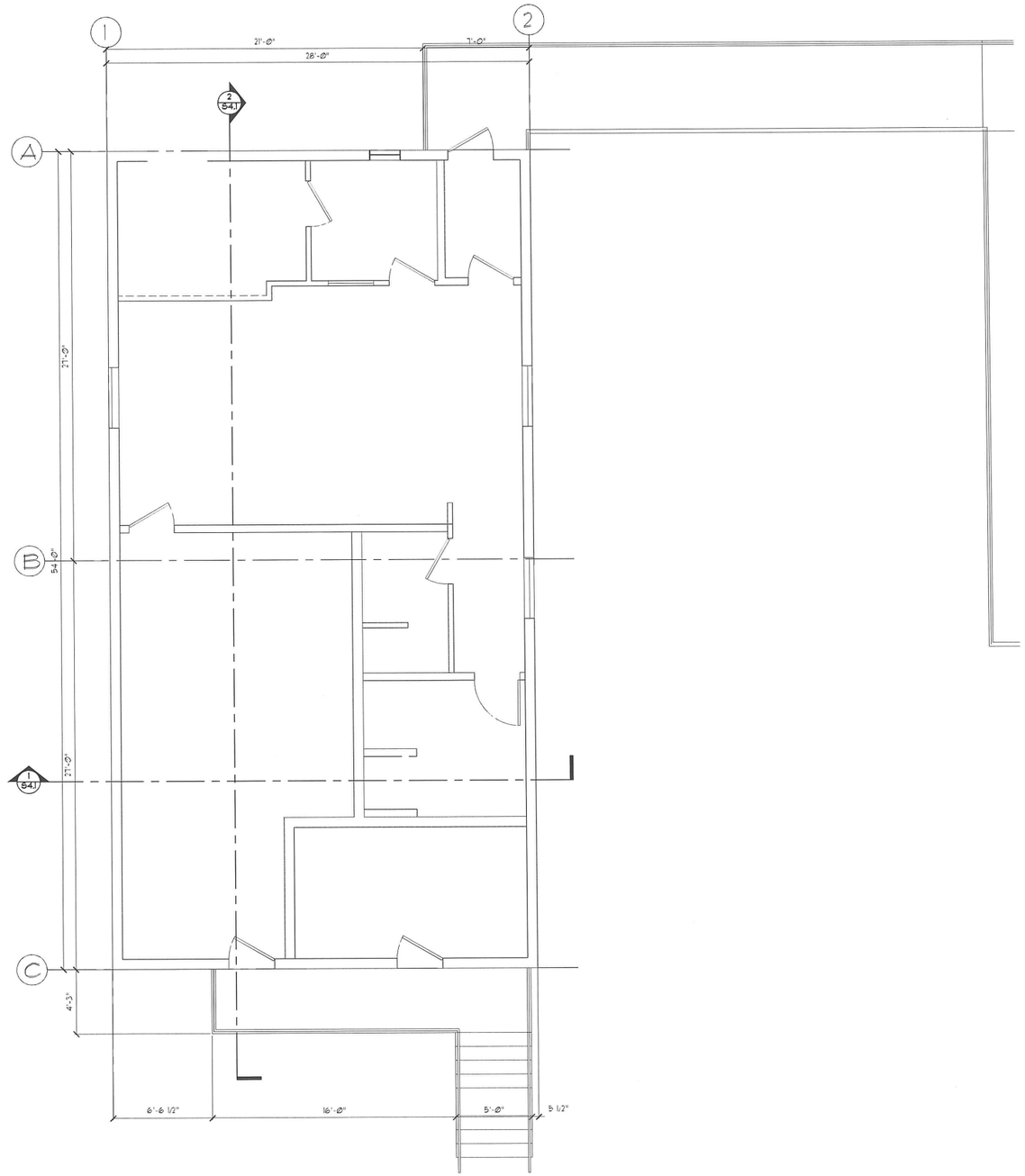

1 S1.1 Foundation Plan
Scale: 1/4" = 1'-0"

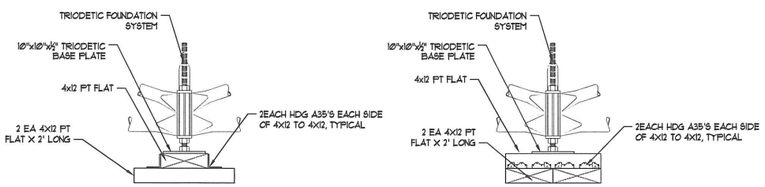

2 S1.1 Triodetic Pad Detail
Scale: 3/4" = 1'-0"

65% DOCUMENTS

Oien Associates, Inc.
Construction Management Engineering Inspections
16922 Hanson Drive
Eagle River, AK 99577
Phone: (907) 694-6567
Fax: (907) 694-2529
email: boiemg@cinet

SCALE: AS SHOWN

BAR IS ONE INCH ON ORIGINAL DRAWINGS
0 1"
IF NOT ONE INCH ON THIS SHEET, ADJUST SCALES ACCORDINGLY

CONSTRUCTION RECORD	
FIELD BOOK	
STAKING	
FOREMAN	
AS-BUILT	
INSPECTOR	

STATE OF ALASKA
BENJAMIN C. BOIEN
CE-9141
REGISTERED PROFESSIONAL ENGINEER
PRELIMINARY
NOT FOR CONSTRUCTION

WASHETERIA AND WATER TANK

WASHETERIA FOUNDATION PLAN

CHEFORNAK, ALASKA

CE2 ENGINEERS, INC.
PO BOX 223646 ANCHORAGE, AK 99523 PH: 907-345-1010 FAX: 907-345-1015

REVISION	BY	DATE

Project No. 32488
Date 10/14/13
Designed BCD
Drawn RRJ
Approved OIA

Sheet No. S1.1
SHEET ____ OF ____

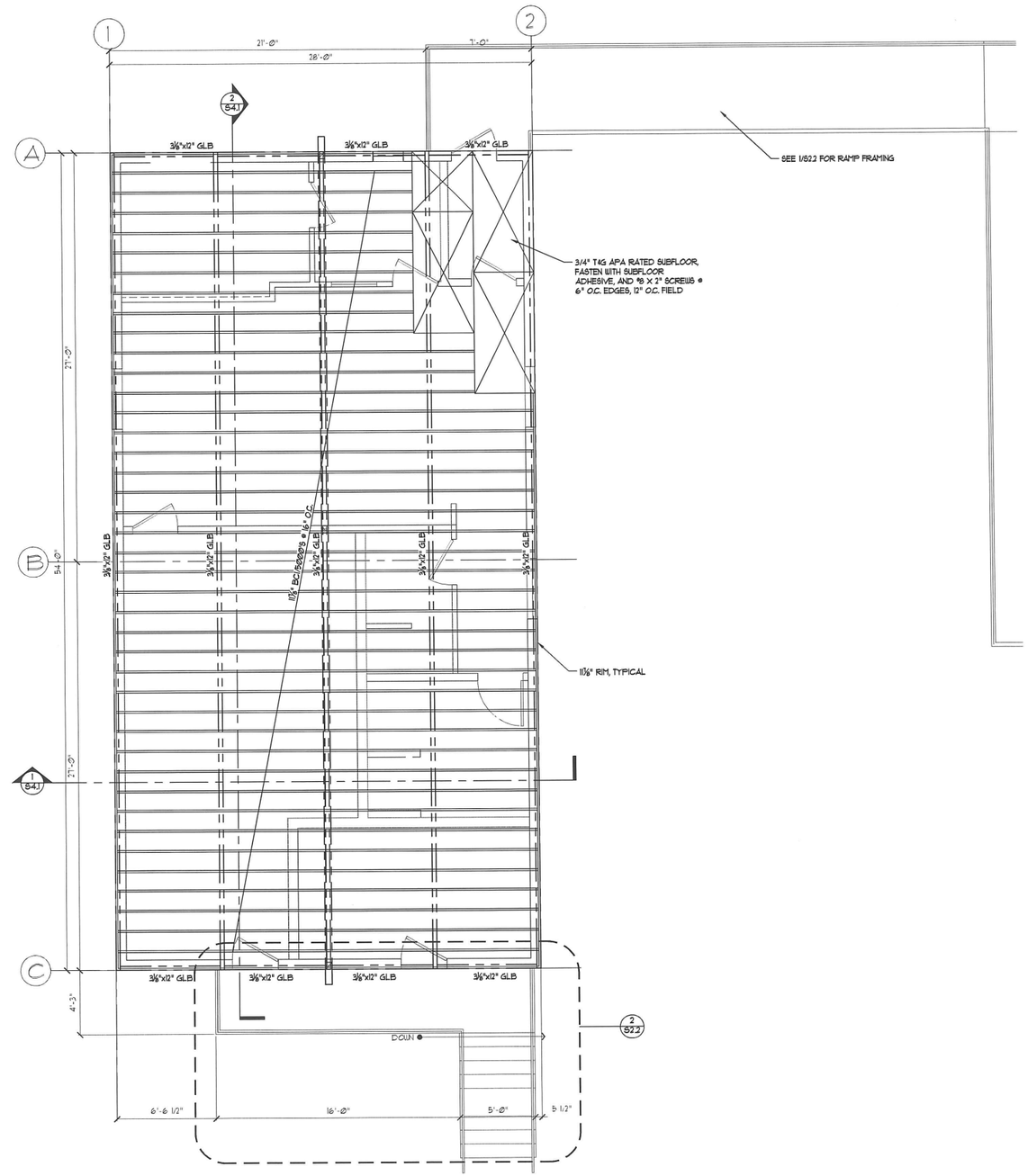

1 S2.1 Floor Framing Plan
Scale: 1/4" = 1'-0"

65% DOCUMENTS

Olen Associates, Inc.
Construction Management Engineering Inspections
Phone: (907) 344-6601
Fax: (907) 344-6609
16822 Vernon Drive
Eagle River, AK 99577
email: bolen@gci.net

SCALE: AS SHOWN

BAR IS ONE INCH ON ORIGINAL DRAWING
0 1"
IF NOT ONE INCH ON THIS SHEET, ADJUST SCALES ACCORDINGLY

CONSTRUCTION RECORD
FIELD BOOK
STAKING
FOREMAN
AS-BUILT
INSPECTOR

STATE OF ALASKA
49th
PRELIMINARY FOR CONSTRUCTION
BENJAMIN C. BOLEN
CE-211
REGISTERED PROFESSIONAL ENGINEER

WASHETERIA AND WATER TANK

WASHETERIA
FLOOR FRAMING PLAN

CHEFORNAK, ALASKA

CE2 ENGINEERS, INC.
PO BOX 220246 ANCHORAGE, AK 99523 PH 907-349-1610 FAX 907-349-1615

REVISION	BY	DATE

Project No. 32488
Date 10/14/13
Designed BCO
Drawn RRJ
Approved OIA

Sheet No.
S2.1
SHEET ____ OF ____

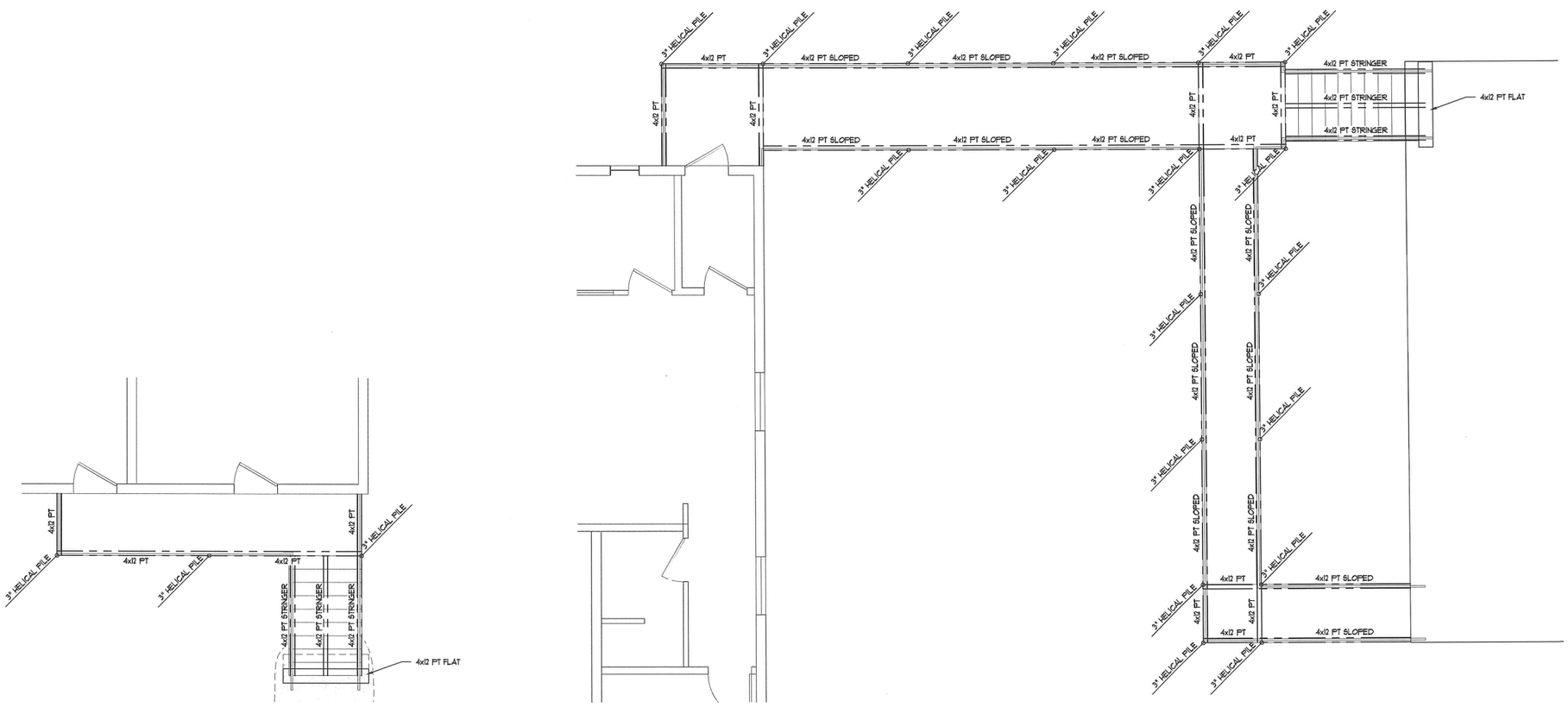

2 S2.2 Exterior Stair Framing Plan
Scale: 3/8" = 1'-0"

1 S2.2 Ramp Framing Plan
Scale: 1/4" = 1'-0"

65% DOCUMENTS

Oien Associates, Inc.
Construction Management Engineering Inspections
16922 Hanson Drive
Eagle River, AK 99577
Phone/Fax (907) 694-6591
Fax/Alt (907) 694-2629
email: boiena@gci.net

SCALE: AS SHOWN

BAR IS ONE INCH ON ORIGINAL DRAWINGS
0 1"
IF NOT ONE INCH ON THIS SHEET, ADJUST SCALES ACCORDINGLY

CONSTRUCTION RECORD
FIELD BOOK
STAKING
FOREMAN
AS-BUILT
INSPECTOR

STATE OF ALASKA
BENJAMIN C. FRIEDMAN
CE-9141
REGISTERED PROFESSIONAL ENGINEER
PRELIMINARY FOR CONSTRUCTION

WASHETERIA AND WATER TANK

WASHETERIA RAMP FRAMING PLAN EXT. STAIR FRAMING PLAN

CHEFORNAK, ALASKA

CE2 ENGINEERS, INC.
PO BOX 220346 ANCHORAGE, AK 99523 PH: 907-349-5015 FAX: 907-349-5015

REVISION	BY	DATE

Project No. 32488
Date 10/14/13
Designed BCO
Drawn RRJ
Approved OIA

Sheet No. S2.2
SHEET ____ OF ____

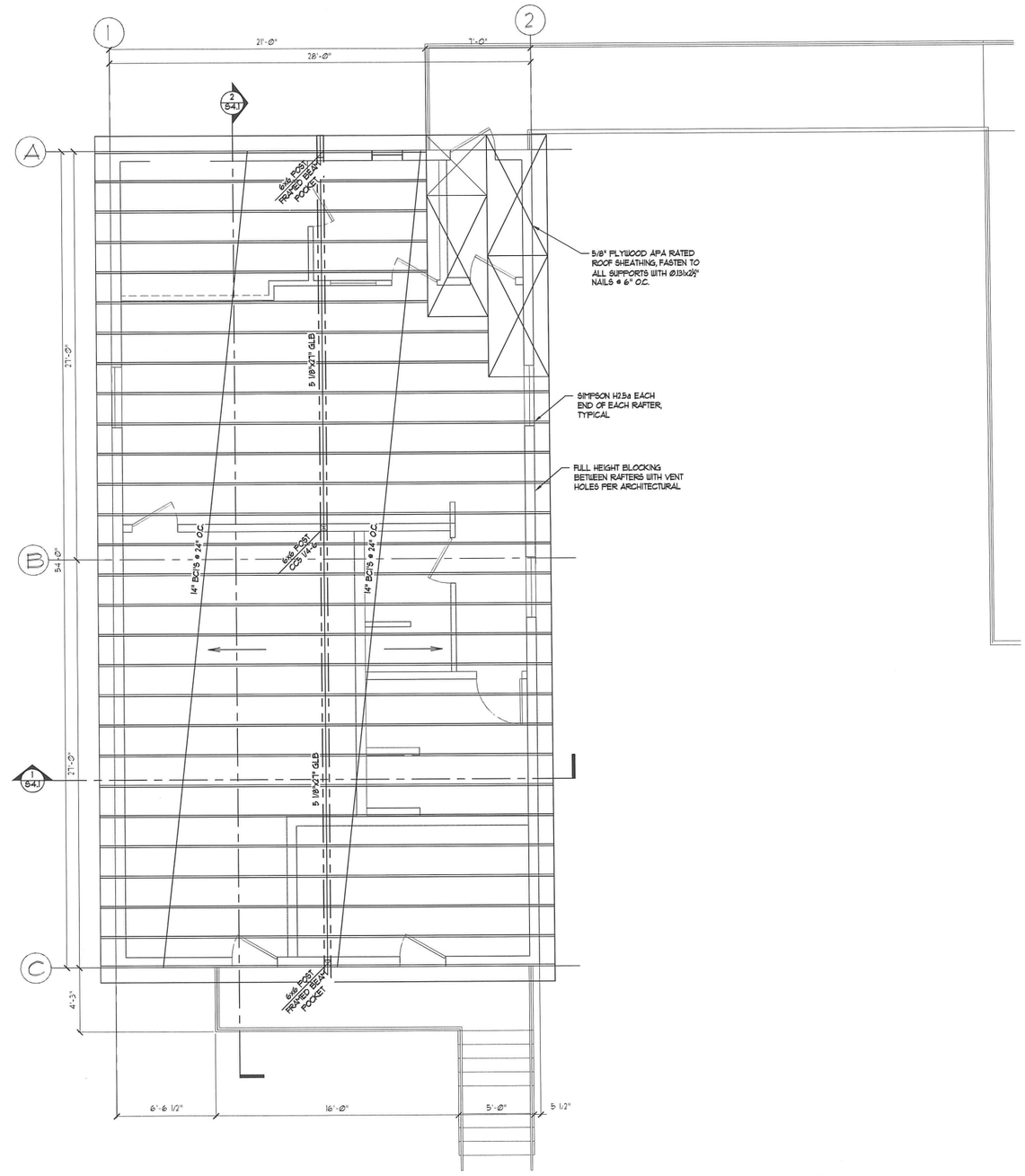

1 / S3.1 Roof Framing Plan

Scale: ¼" = 1'-0"

65% DOCUMENTS

Olen Associates, Inc.
Construction Management Engineering Inspections
16322 Hanson Drive
Eagle River, AK 99577
Phone (907) 694-6567
Fax: (907) 694-6569
email: bolen@gci.net

SCALE: AS SHOWN

BAR IS ONE INCH ON ORIGINAL DRAWING

0 1"

IF NOT ONE INCH ON THIS SHEET, ADJUST SCALES ACCORDINGLY

CONSTRUCTION RECORD

FIELD BOOK	
STAKING	
FOREMAN	
AS-BUILT	
INSPECTOR	

STATE OF ALASKA — BENJAMIN C. BOLEN — CE-9141 — REGISTERED PROFESSIONAL ENGINEER — PRELIMINARY NOT FOR CONSTRUCTION

WASHETERIA AND WATER TANK

WASHETERIA
ROOF FRAMING PLAN

CHEFORNAK, ALASKA

CE2 ENGINEERS, INC.
PO BOX 222564 ANCHORAGE, AK 99503 PH: 907-349-1018 FAX: 907-349-1015

REVISION	BY	DATE

Project No. 32488
Date 10/14/13
Designed BCO
Drawn RRJ
Approved OJA

Sheet No. S3.1

SHEET ____ OF ____

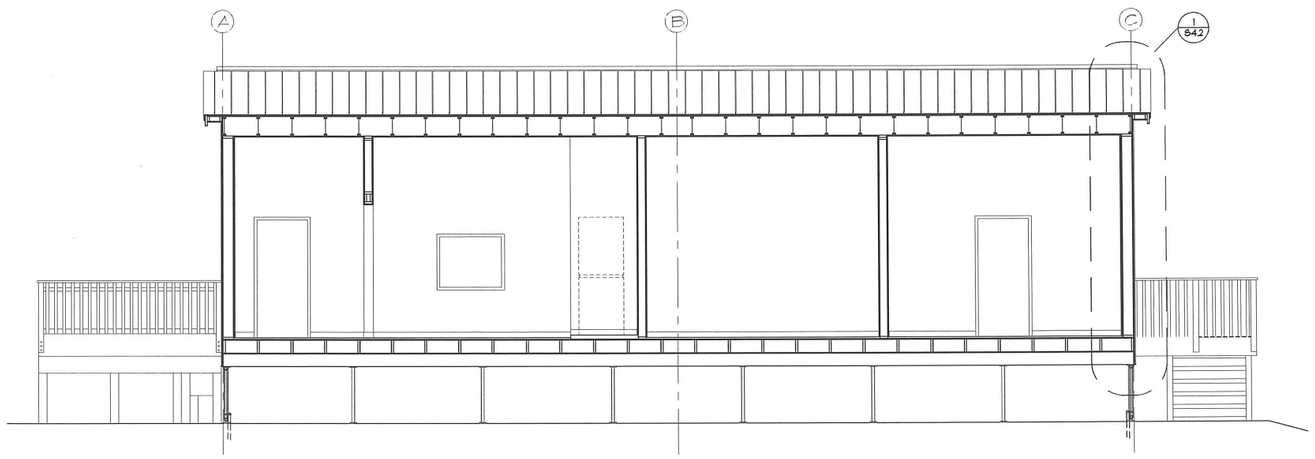

2 S4.1 Building Section
Scale: ¼" = 1'-0"

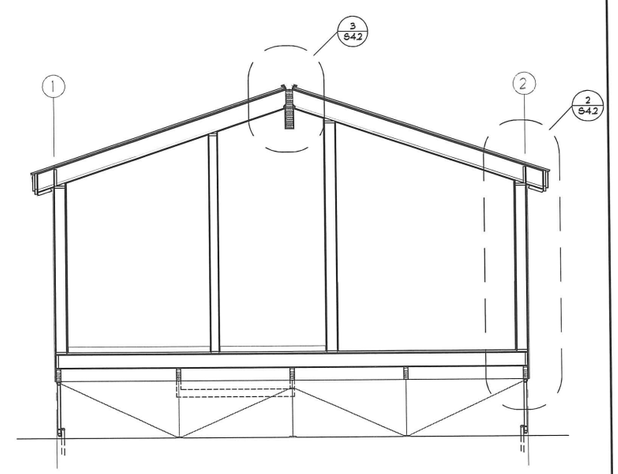

1 S4.1 Building Section
Scale: ¼" = 1'-0"

65% DOCUMENTS

WASHETERIA AND WATER TANK

WASHETERIA BUILDING SECTIONS

CHEFORNAK, ALASKA

CE2 ENGINEERS, INC.
PO BOX 220968 ANCHORAGE, AK 99522 PH: 907-349-9615 FAX: 907-349-9615

REVISION	BY	DATE

Project No. 324888
Date 10/14/13
Designed BCO
Drawn RRJ
Approved OJA

Sheet No. S4.1
SHEET ____ OF ____

Olen Associates, Inc.
Construction Management Engineering Inspections
16322 Hanson Drive
Eagle River, AK 99577
Phone (907) 694-6567
Fax (907) 694-2599
email: bolen@gci.net

SCALE: AS SHOWN

BAR IS ONE INCH ON ORIGINAL DRAWINGS
0 1"
IF NOT ONE INCH ON THIS SHEET, ADJUST SCALES ACCORDINGLY

CONSTRUCTION RECORD
FIELD BOOK
STAKING
FOREMAN
AS-BUILT
INSPECTOR

STATE OF ALASKA
BENJAMIN C. OLEN
CE-9141
REGISTERED PROFESSIONAL ENGINEER
FOR CONSTRUCTION

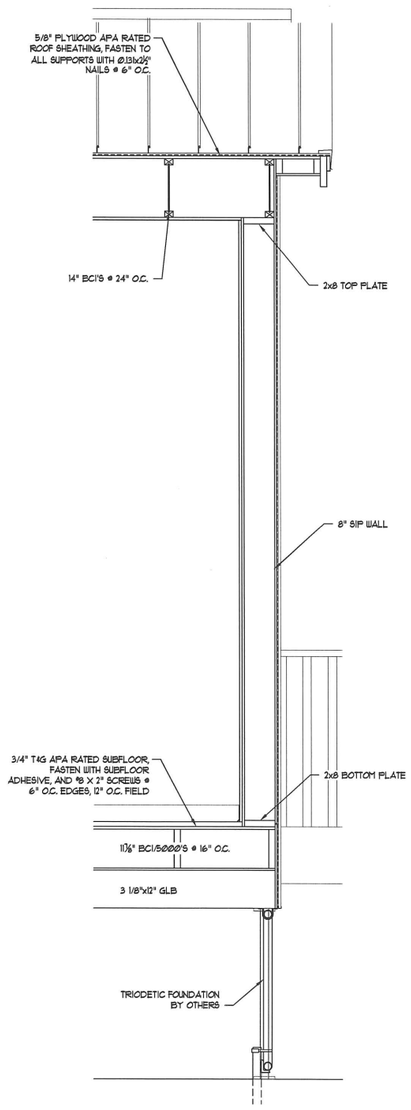

1 S4.2 Wall Section
Scale: ¾" = 1'-0"

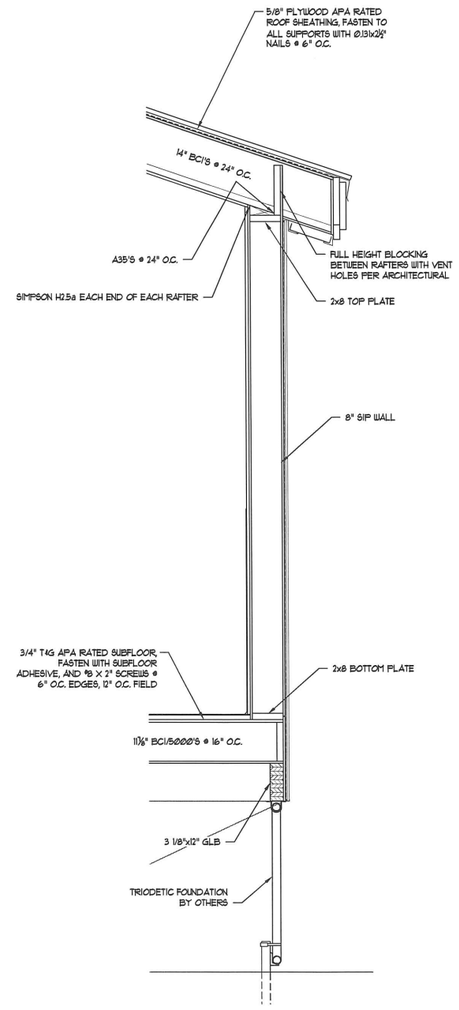

2 S4.2 Wall Section
Scale: ¾" = 1'-0"

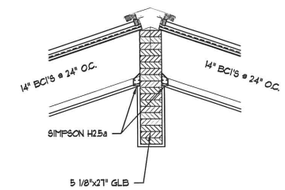

3 S4.2 Wall Section
Scale: ¾" = 1'-0"

65% DOCUMENTS

Oien Associates, Inc.
Construction Management Engineering Inspections
16402 Vernon Drive
Eagle River, AK 99577
Phone: (907) 694-2567
Fax: (907) 694-2569
email: boiengc@net

SCALE: AS SHOWN

BAR IS ONE INCH ON ORIGINAL DRAWING
0 1"
IF NOT ONE INCH ON THIS SHEET, ADJUST SCALES ACCORDINGLY

CONSTRUCTION RECORD
FIELD BOOK
STAKING
FOREMAN
AS-BUILT
INSPECTOR

STATE OF ALASKA
PRELIMINARY NOT FOR CONSTRUCTION
BENJAMIN R. COX
CE-9141
REGISTERED PROFESSIONAL ENGINEER

WASHETERIA AND WATER TANK

WASHETERIA
WALL SECTIONS

CHEFORNAK, ALASKA

CE2 ENGINEERS, INC.
PO BOX 202948 ANCHORAGE, AK 99520 PH: 907-345-1018 FAX: 907-345-1015

REVISION	BY	DATE

Project No. 32488
Date 10/14/13
Designed BCO
Drawn RRJ
Approved OIA

Sheet No. S4.2
SHEET ____ OF ____

EQUIPMENT LIST

B-1 BOILER: OIL FIRED BOILER: CAST IRON SECTIONS, 189,000 BTUH INPUT, 1.35 GPH 167 MBH DOE OUTPUT
BASE BOILER, NO CIRCULATOR, ALASKA DOUBLE HIGH LIMITS, LOW WATER CUT OFF, COMBUSTIBLE FLOOR BASE
INTERLOCK SWITCH FOR PUMP AND BOILER ROOM FAN. MFG: BURNHAM MPO-IQ 189 OR EQUAL 5 AMPS/ 115 V / 1 PH. 7 INCH FLUE

B-2, B-3, B-4 BOILER: OIL FIRED BOILER: CAST IRON SECTIONS, 364,000 BTUH INPUT, 2.60 GPH 299,000 MBH DOE OUTPUT
BASE BOILER, NO CIRCULATOR, ALASKA DOUBLE HIGH LIMITS, LOW WATER CUT OFF, COMBUSTIBLE FLOOR BASE
INTERLOCK SWITCH FOR PUMP AND BOILER ROOM FAN. MFG: BURNHAM V8H9W OR EQUAL 5 AMPS/ 115 V / 1 PH. 8 INCH FLUE

UH-1, UH-2, UH-3 UNIT HEATER: HYDRONIC HORIZONAL PROPELLOR TYPE, 100 MBH, 180 EGT, 155 LGT, 9.0 GPM FLOW
MFG: MODINE HC 165 OR EQUAL 1/3 HP / 115 V / 1 PH TE MOTOR

UH-4, UH-5, UH-7 UNIT HEATER: HYDRONIC HORIZONAL PROPELLOR TYPE, 40 MBH, 180 EGT, 155 LGT 3.6 GPM FLOW
MFG: MODINE HC 86 OR EQUAL 1/8 HP / 115 V / 1 PH TE MOTOR

UH-6 UH-8 UNIT HEATER: CABINET UNIT HEATER, 4 MBH, 180 EGT, 150 LGT, 1.0 GPM
MFG: BEACON MORRIS TWIN FLO MODEL K42 WITH RECESSED WALL MOUNTING KIT

BH-1, BH-2 BATHROOM HEATING PANEL: 24 X 48 RECESSED CEILING PANEL HEATER-HYDRONIC 1 GPM FLOW
MFG: AEROTECH RLMF 2 FT X 4 FT PANEL WITH FK 24 FLANGE KIT OR EQUAL

EF-1 EXHAUST FAN: CENTRIFUGAL INLINE FAN. 220 CFM@ 0.4 INCHES WC STEEL HOUSING WITH 8 INCH FLANGES.
MFG: FANTECH FG-8 118 WATTS/ 115 V / 1 PH / 60 HZ WITH SPEED CONTROL.

EF-2, EF-3 EXHAUST FAN: CENTRIFUGAL INLINE FAN. 300 CFM@ 0.4 INCHES WC STEEL HOUSING WITH 8 INCH FLANGES.
MFG: FANTECH FG-8 118 WATTS/ 115 V / 1 PH / 60 HZ WITH SPEED CONTROL.

BRF-1 BOILER ROOM FAN: CENTRIFUGAL INLINE FAN. 1500 CFM@ 0.4 INCHES WC BELT DRIVE FAN WITH DOUBLE DRIVES
TE MOTOR, HANGING RUBBER ISOLATORS, GREASABLE PILLOW BLOCKS WITH EXTENDED LUBE LINES, TOGGLE SWITCH,
MFG: GREENHECK BSQ-14-3 1/3 HP/ 115 V/ 1 PH OR EQUAL

CD-1 CONTROL DAMPER: 14"WIDE X 8"HIGH OPPOSED BLADE DAMPER-LOW LEAKAGE:
MFG: RUSKIN CD-50 DAMPER WITH LOCKING QUADRANT

CD-2 CONTROL DAMPER: 14"WIDE X 14"HIGH OPPOSED BLADE DAMPER-LOW LEAKAGE:
MFG: RUSKIN CD-50 DAMPER WITH LOCKING QUADRANT

SF-1 SUMMER FILTERS: 2 EA 20 X 25 X 1 ALUMINUM PERMANENT WASHABLE FILTER: MFG: AAF 316-001-800 OR EQUAL

SF-2, SF-3 SUMMER FILTER: 1 EA 8 3/4 X 10 X 3/8 ALUMINUM FILTER. MFG: GRAINGER 6JKA7 OR EQUAL01-800 OR EQUAL

PHC-1, PHC-2, PHC-3 PRE HEAT COIL; CASED COIL , 800 CFM, 24" W X 16"H FA. 70 F EAT, 125 LAT, 5.2 GPM
50-50 PROP GLYCOL, .08 "WC PD, 50,300 BTUH CAP, 1.24 FT FLUID PD. MFG: SUPER RADIATOR 24 X 16-35-0625/72

HC-1, HC-2, HC-3 HEATING COIL; CASED COIL , 800 CFM, 24" W X 16"H FA. 125 F EAT, 175 LAT, 6.3 GPM
50-50 PROP GLYCOL, .11 "WC PD, 44.750 BTUH CAP, 1.66 FT FLUID PD. MFG: SUPER RADIATOR 24 X 16-35-0625/108

DV-1 DRYER VENT CAP: WALL CAP, 8"ROUND INLET, STAINLESS STEEL. MFG: ALDES 22-408-SS

DV-2 DRYER VENT CAP: WALL CAP, 10"ROUND INLET, STAINLESS STEEL. MFG: ALDES 22-410-SS

BDD-1 BACKDRAFT DAMPER: 10 INCHS WIDE X 8 INCHES HIGH COUNTERWEIGHTED BACKDRAFT DAMPER. RUSKIN CBD2 OR EQUAL

BDD-2 BACKDRAFT DAMPER: 10 INCHS WIDE X 8 INCHES HIGH COUNTERWEIGHTED BACKDRAFT DAMPER. RUSKIN CBD2 OR EQUAL

RG-1 RETURN GRILLE: BAR GRILL WITH HORIZONTAL BARS 10 X 10 MFG: SHOEMAKER 905 OR EQUAL

RG-2 RETURN GRILLE: BAR GRILL WITH HORIZONTAL BARS 8 X 8 MFG: SHOEMAKER 905 OR EQUAL

CF-1, CF-2, CF-3 CEILING FAN: 36 INCH FAN WITH SPEED CONTROL. MFG: LEADING EDGE 36201 WITH 12003 SPEED CONTROL OR EQUAL

DT-1 DAY TANK: 50 GALLON TANK WITH 150 PERCENT CONTAINMENT BASIN. SIMPLEX TRANSFER PUMP 1/3 HP/115 V / 1 PH
INCLUDES LEVEL CONTROL, CONTAINMENT ALARM, CONTROL PANEL, SOLENOID 3/4" SHUTOFF VALVE, 4 EACH DIP TUBES FOR BOILERS
PRIMER PUMP FOR SUPPLY LINE. MFG: TRAMONT TRS SERIES OR APPROVED EQUAL

PMP-1A , PMP-1B: CIRCULATING PUMP: 21 GPM @ 17 FT TDH
MFG: GRUNDFOS UPS32-80/2 OR EQUAL 1/2 HP / 230 V / 1 PH.

PMP-2A, PMP-2B: CIRCULATING PUMP: 70 GPM @ 36 FT TDH
MFG: GRUNDFOS UPS40-240/2 OR EQUAL 1 1/2 HP / 230 V / 1 PH.

PMP-3: INLINE CIRCULATOR PUMP: 70 GPM @ 12 FT TDH, 50/50 ETH GLYCOL, MFG: GRUNDFOS UPS 50/80/4 3/4 HP / 208 / 3 PH

PMP-4: CIRCULATING JET PUMP:: 15 GPM @ 20 PSIG MFG: GOULDS J5S 1/2 HP/ 115 V / 1 PH OR EQUAL

PMP-5: CLOSE COUPLED PUMP: SS HOUSING 10 GPM @ 15 FT TDH, WATER MFG: GOULDS #1ST2C1E4 1/2 HP/ 115 V/ 1 PH OR EQUAL

PMP-6A, PMP-6B: WATER JET PUMP:: 25 GPM @ 50 PSIG MFG: GOULDS J15S 1 1/2 HP/ 230 V / 1 PH OR EQUAL

HX-1HEAT EXCHANGER: PLATE AND FRAME(SINGLE WALL) HOT SIDE: 185 F GLYCOL IN/ 165 GLYCOL OUT, 50/50 ETH GLYCOL, 50 GPM
COLD SIDE: 155 F IN, 175 F OUT, 50/50 PROP GLYCOL, 70 GPM, 614,000 BTUH, MAX PD HOT/COLD 3 PSI
MFG: AMERIDEX X-40-26 W/4" STUDED PORTS. SINGLE WALL. OR EQUAL

HX-2HEAT EXCHANGER: PLATE AND FRAME (DOUBLE WALL) HOT SIDE: 170 F GLYCOL IN/ 135 GLYCOL OUT, 50/50 PROP GLYCOL, 10 GPM
COLD SIDE: 45 F IN, 75 F OUT, WATER, 10 GPM, 150,000 BTUH, MAX PD HOT/COLD 3 PSI
MFG: AMERIDEX X5-14 W/1" SS NOZZLES. DOUBLE WALL. OR EQUAL

ET-1 EXPANSION TANK: BLADDER TYPE 30 GALLON ACCEPTANCE. MFG: AMTROL EXTROL SX 90 OR EQUAL
ET-3 EXPANSION TANK: BLADDER TYPE 4.4 GALLON ACCEPTANCE. MFG: AMTROL EX 90 OR EQUAL

LEGEND

SYMBOL	ABBREV.	DESCRIPTION
		FLOW ARROW
—GHS—	GHS	GLYCOL HEATING SUPPLY
—GHR—	GHR	GLYCOL HEATING RETURN
—CW—	CW	DOM. COLD WATER SUPPLY
—CWC—	CWC	DOM. COLD WATER CIRC.
—HW—	HW	DOM. HOT WATER
—WTHS—	WTHS	WATER TANK HEAT SUPPLY
—WTHR—	WTHR	WATER TANK HEAT RETURN
—W—	W	WASTE OR SEWER
------V------	V	VENT
—WW—	WW	WASHER WASTE WATER
-----WV-----	WV	WASHER VENT
	VTR	VENT THROUGH ROOF
		BALL VALVE
		PRESS. RELIEF VALVE
		CHECK VALVE
CO	C.O.	CLEAN OUT
—FOS—	FOS	FUEL OIL SUPPLY
—FOR—	FOR	FUEL OIL RETURN
	PMP-	PUMP
	ET	EXPANSION TANK
		PRESSURE GAGE'
		THERMOMETER
	TS	THERMOSTAT
NC	NC	VALVE NORMALLY CLOSED
NO	NO	VALVE NORMALLY OPEN
SC	SC	SPEED CONTROL
AAV	AAV	AUTO AIR VENT
	MAV	MANUAL AIR VENT

MATERIALS

PIPING: POTABLE WATER, TYPE L COPPER, PEX, HDPE, OR CODE APPROVED
PIPING: WASTE AND VENT ABS, DWV COPPER, OR CODE APPROVED
PIPING: GHS, GHR, TYPE L COPPER, BLACK STEEL, PEX(TEMPERATURE RATED) OR EQUAL
INSULATION: GHS-GHR(180 F PIPING), HW PIPING: 1 INCH FIBERGLASS WITH SEALING JACKET AND FITTING COVERS
INSULATION: GHS-GHR(205 F PIPING): 1 1/2 INCH FIBERGLASS WITH SEALING JACKET AND FITTING COVERS
FLOW CONTROL VALVES: TACO OR EQUAL. MAX 3 FT PD
AUTO AIR VENTS OR MANUAL AIR VENTS: TACO OR EQUAL

GT-1: GLYCOL MIX BARREL: NOMINAL 30 GALLON TANK:
MFG: ACE AC00032N1V2 WITH BLACKMER MODEL 414 B OR EQ
AS-1 AIR SEPARATOR 3 INCH SIZE MFG: TACO 436 OR EQUAL
AS-2 AIR SCOOP 1 1/2 INCH SIZE MFG: TACO 433 OR EQUAL

SHUT-OFF VALVES: USE FULL PORT BALL VALVES
CHECK VALVES: USE SWING CHECK VALVES
GLYCOL 50-50 MIX PROPYLENE GLYCOL

CAPSTONE ENGINEERING LLC
MECHANICAL ENGINEERS
12110 BUSINESS BLVD STE 6 PMB 169
EAGLE RIVER, ALASKA 99577
TELEPHONE & FAX 541-331-8357

STATE OF ALASKA
FREDERICK H BELZ
ME 6698
REGISTERED PROFESSIONAL ENGINEER

10-15-2013

EQUIPMENT LIST AND LEGEND
CHEFORNAK WASHETERIA
CHEFORNAK, ALASKA

DATE: OCT 12-2013
DRAWN: F.H. BELZ
CHKD:
SCALE: AS NOTED
REVISED:
JOB NO. C 389

SHEET NO. M-1.0 | 1 OF 8

G:\ACAD\CHEFORNAK\2013 Washeteria and Water Tank\From Others\Fred Beltz\C389 CHEFORNAK M-1.0 EQUIPMENT AND LEGEND.dwg, 10/15/2013 12:25:02 PM, cmerz, \\Ce2main\LANIER MP C2050/LD520C PCL 6

CONTROLS

CV-1, CV-2: CONTROL VALVE: 1/4 TURN MOTOR OPERATED VALVE 2 INCH NPT BRASS BODY
SS BALL, SPRING RETURN 24 VAC ACTUATOR (FAIL OPEN) MFG: HONEYWELL VB2F 1350 OR EQUAL
CV-3 THRU CV-10 CONTROL VALVE: 1/4 TURN MOTOR OPERATED VALVE 1 INCH NPT BRASS BODY
SS BALL, SPRING RETURN 24 VAC ACTUATOR (FAIL OPEN) MFG: HONEYWELL VB2F 1350 OR EQUAL
CV-11 CONTROL VALVE: 1/4 TURN MOTOR OPERATED VALVE 3/4 INCH NPT BRASS BODY
SS BALL, SPRING RETURN 24 VAC ACTUATOR (FAIL OPEN) MFG: HONEYWELL VB2F 1350 OR EQUAL
CV-12, CV-13, CV-14 CONTROL VALVE: 1/4 TURN ZONE VALVE 3/4 INCH NPT BRASS BODY
SS BALL, SPRING RETURN 24 VAC ACTUATOR MFG: TACO 570 OR EQUAL
CV-15 3 WAY MIXING VALVE: 3 INCH BRASS BODY MIXING VALVE, 24 VAC CONTROL HEAD, 70 GPM, 1 PSI DROP
HONEYWELL V5013B1011 WITH ML7425B3012 OPERATOR, STEM UP ON POWER FAILURE
MD-1 MOTORIZED DAMPER: 48"WIDE X 16"HIGH PARALEL BLADE DAMPER-LOW LEAKAGE:
MFG: RUSKIN CD-50 DAMPER WITH BELIMO LF24 SPRING RETURN ACTUATOR 24 VAC 5 VA
TS-1 WALL THERMOSTATS OR UH-4, UH-5, UH-6, UH-8 LINE VOLTAGE WALL STAT,
MFG: HONEYWELL T4051A WITH LOCKING COVER BOX OR EQUAL
TS-2 WALL THERMOSTATS OR UH-1, UH-2, UH-3, UH-7, EF-2, EF-3 LINE VOLTAGE WALL STAT, 24 VAC:
MFG: HONEYWELL T631A OR EQUAL
TS-3 FOR BH-1, BH-2 THERMOSTAT: LOW VOLTAGE WALL STAT, 24 VAC:
MFG: HONEYWELL T87 WITH LOCKING COVER BOX
TC-1, TC-2 TEMPERATURE CONTROL . IMMERSION TYPE STAT WITH
ADJUSTIBLE SET POINT MFG: HONEYWELL T6006A1145 OR EQUAL
TC-3 TEMPERATURE CONTROL . AIR TYPE REMOTE BULB, 20 FT CAPILLARY
ADJUSTIBLE SET POINT MFG: HONEYWELL T675A1029/B OR EQUAL
PS-1,PS-2 PUMP PRESSURE SWITCH: SQUARE D 9013FSG2J20 OR EQUAL
BCP-1 BOILER CONTROL PANEL: SEQUENCES B-1,B-2, AND B-3 BASED ON RETURN AND SUPPLY TEMPERATURE.
MFG: HONEYWELL T775P2003 OR APPROVED EQUAL
THERMOMETERS: DIAL TYPE FOR PIPE SURFACE MOUNTING.
PRESSURE GAGES: BOURDON TUBE TYPE, 2 INCH, SUITABLE FOR PRESSURE MEASURED

SEQUENCE OF OPERATION-- BOILER SYSTEMS

BOILER SYSTEM #1

BOILER SYSTEM #1 BOILER B-1, PUMPS PMP-1A & PMP-1B, HC-1, HC-2, HC-3, CV-3, CV-4, CV-5
BOILER OPERATES CONTINUOUSLY ON INTEGRAL CONTROLS, SET 205 F. PMP-1A OR PMP-1B OPERATES CONTINUOUSLY
CV-3, CV-4 , CV-5 CYCLE WHEN ASSOCIATED DRYERS OPERATE DURING LAUNDRY OCCUPIED MODE
CV-3, CV-4 , CV-5 ARE DISABLED DURING LAUNDRY UNOCCUPIED MODE

BOILER SYSTEM #2

BOILER SYSTEM #1 BOILER B-2, B-3,B-4, PUMPS PMP-2A & PMP-2B, PHC-1, PHC-2, PHC-3, BUILDING HEAT, TANK HEAT, WATER HEAT
BOILERS OPERATES CONTINUOUSLY CONTROLLED BY BCP-1, SET 180 F. PMP-2A OR PMP-2B OPERATES CONTINUOUSLY
CV-6, CV-7 , CV-8 CYCLE WHEN ASSOCIATED DRYERS OPERATE DURING LAUNDRY OCCUPIED MODE
CV-6, CV-7 , CV-8 ARE DISABLED DURING LAUNDRY UNOCCUPIED MODE
CV-1 IS OPEN AND CV-2 IS CLOSED DURING LAUNDRY OCCUPIED MODE
CV-1 IS CLOSED AND CV-2 IS OPEN DURING LAUNDRY UNOCCUPIED MODE
UNIT HEATERS UH-1, UH-2, UH-3 OPERATE ON ROOM THERMOSTATS TO CYCLE THE FAN DURING LAUNDRY OCCUPIED MODE
UNIT HEATERS UH-1, UH-2, UH-3 ARE DISABLED DURING LAUNDRY UNOCCUPIED MODE
UNIT HEATERS UH-4, UH-5, UH-6, UH-7, UH-8: (COIL FLOW CONTINUOUS) LINE VOLTAGE ROOM THERMOSTATS CYCLE THE FANS.
BATHROOM HEATERS: BH-1, BH-2, CV-13, CV-14, TS-3: LOW VOLTAGE STATS CYCLE THE ZONE VALVES
UTILADOR HEAT TRACE: CV-12, TC-3 REMOTE BULB TSTAT: TSTAT CYCLES CV-12 AS NEEDED
HOT WATER MAKER HWM-1: HWM-1, TC-1, CV-10: TC-1 CYCLES CV-10 TO MAINTAIN TANK TERMPERATURE
WATER TANK HEATING: HWM-2: HWM-2, TC-1, CV-11, PMP-4, TANK TSTAT: TANK STAT STARTS PMP-4 AND ENABLES CV-11 TO PROVIDE TANK HEATING
WATER LOOP HEAT ADD: CV-10, PMP-5, HX-1: STORAGE TANK HEAT: CV-11,TC-2: TC-2 ENABLES CV-10 AND CONTROLS PMP-5 TO ADD HEAT TO WATER LINE.
POWER HOUSE ADD HEAT TO BOILER SYSTEM: CV-15, HX-2, PMP-3: CONTROLS OPERATE PMP-3, AND CV-15 TO EFFECT HEAT ADD TO HEATING LOOP

BOILER ROOM FAN OPERATION: BRF-1, B-1,B-2, B-3, B-4: BOILER ROOM FAN OPERATES WHEN ANY BOILER FIRES
BOILER ROOM FAN ALSO OPERATES WHEN BOILER ROOM COOLING TSTAT CLOSES (SET 80 F CLOSE, 75 F OPEN)

SEQUENCE OF OPERATION-- EXHAUST FANS-MOTORIZED DAMPERS

EF-1 OPERATES CONTINUOUSLY DURING LAUNROMAT OCCUPIED MODE
EF-2 AND EF-3 OPERATE AS CONTROLLED BY TS-2 AREA COOLING TSTATS
MD-1 IS OPEN DURING LAUNDRY OCCUPIED MODE/CLOSED DURING UNOCCUPIED MODE

SEQUENCE OF OPERATION-- LAUNDRY OCCUPIED/UNOCCUPIED MODES

OCCUPIED MODE

EF-1 OPERATES CONTINUOUSLY
PHC-1, PHC-2, PHC-3 OPERATION IS ENABLED
HC-1, HC-2, HC-3 OPERATION IS ENABLED
MD-1 IS OPEN
UH-1, UH-2, UH-3 OPERATION IS ENABLED
ALL OTHER EQUIPMENT OPERATES NORMALLY

UNOCCUPIED MODE

EF-1 IS STOPPED
PHC-1, PHC-2, PHC-3 OPERATION IS DISABLED
HC-1, HC-2, HC-3 OPERATION IS DISABLED
MD-1 IS CLOSED
UH-1, UH-2, UH-3 OPERATION IS DISABLED
ALL OTHER EQUIPMENT OPERATES NORMALLY

CAPSTONE ENGINEERING LLC
MECHANICAL ENGINEERS
12110 BUSINESS BLVD STE 6, PMB 169
EAGLE RIVER, ALASKA 99577
TELEPHONE & FAX 541-884-8065

STATE OF ALASKA 49TH
FREDERICK H BELZ
ME 6698
REGISTERED PROFESSIONAL ENGINEER

CONTROLS AND SEQUENCE OF OPERATION
CHEFORNAK WASHETERIA
CHEFORNAK, ALASKA

DATE: OCTOBER 14, 2013
DRAWN: F.H. BELZ
CHKD:
SCALE: AS NOTED
REVISED:
JOB NO. C389

SHEET NO. M-1.5
2 OF 8

G:\ACAD\CHEFORNAK\2013 Washeteria and Water Tank\From Others\Fred Beltz\C389 CHEFORNAK M-1.5 CONTROLS AND SEQUENCE OF OPERATION.dwg, 10/15/2013 3:33:13 PM, cmerz, \\Ce2main\LANIER MP C2050/LD520C PCL 6

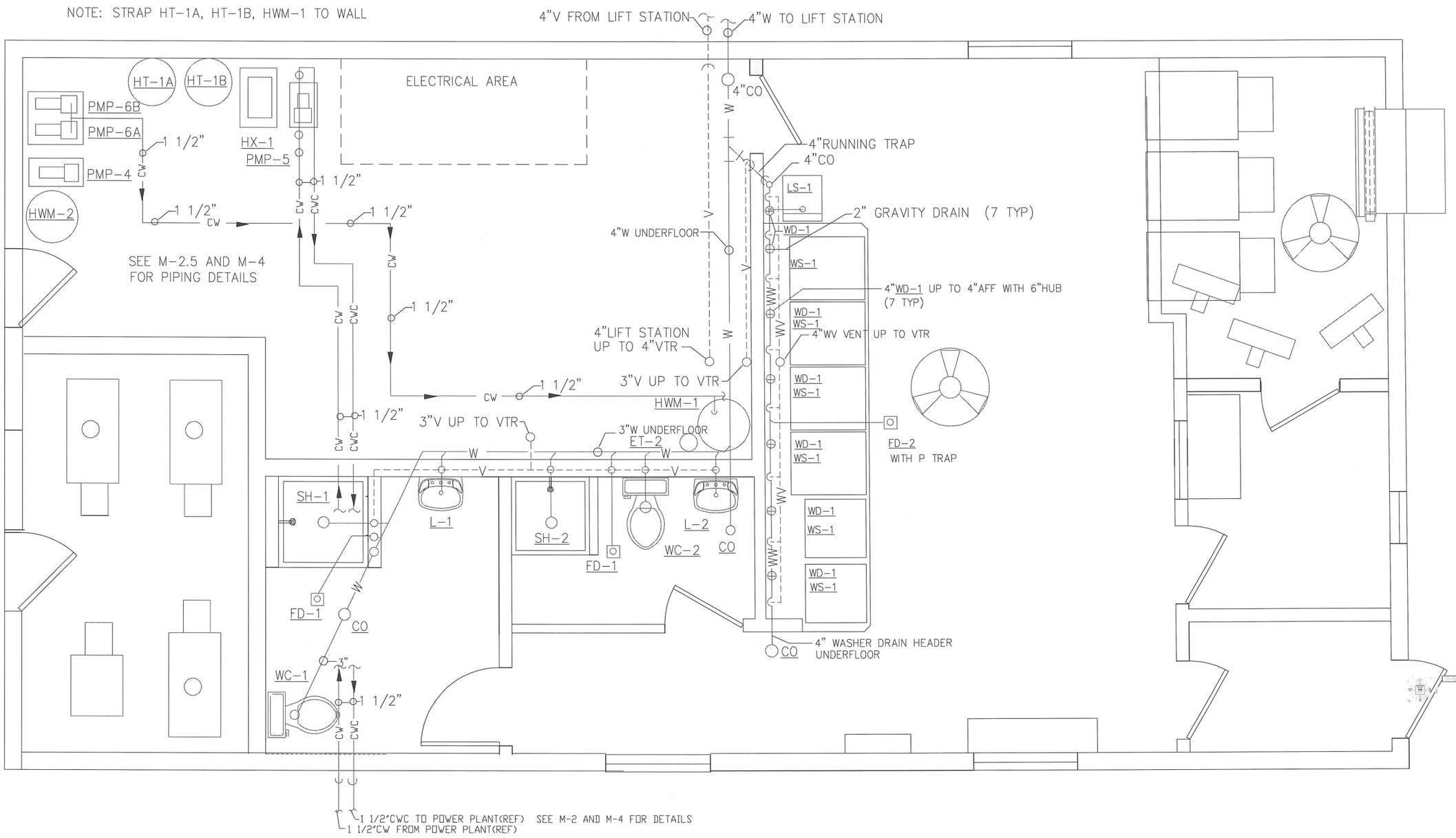

CHEFORNAK WASHETERIA PLUMBING PLAN

SCALE 1/4"=1'-0"

CAPSTONE ENGINEERING LLC
MECHANICAL ENGINEERS
12110 BUSINESS BLVD STE 6 PMB 169
EAGLE RIVER, ALASKA 99577
TELEPHONE & FAX 541-884-8665

STATE OF ALASKA
49TH
FREDERICK H BELZ
ME 6698
REGISTERED PROFESSIONAL ENGINEER

PLUMBING PLAN
CHEFORNAK WASHETERIA
CHEFORNAK, ALASKA

DATE: OCTOBER 14, 2013
DRAWN: F.H. BELZ
CHKD:
SCALE: AS NOTED
REVISED:
JOB NO. C389

SHEET NO. M-2.0
3 OF 8

G:\ACAD\CHEFORNAK\2013 Washeteria and Water Tank\From Others\Fred Beltz\C389 M-2.0 PLUMBING PLAN-CHEFORNAK.dwg, 10/15/2013 3:31:49 PM, cmerz, \\Ce2main\LANIER MP C2050/LDS20C PCL 6

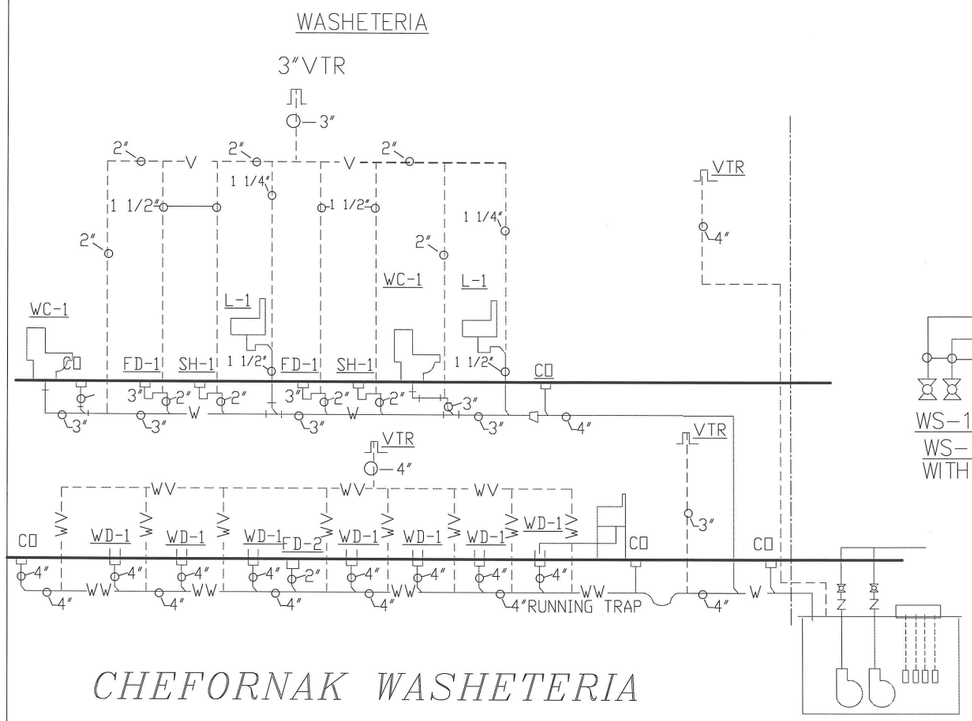

CHEFORNAK WASHETERIA WASTE AND VENT DIAGRAM

NO SCALE

LIFT STATION-SEE CIVIL

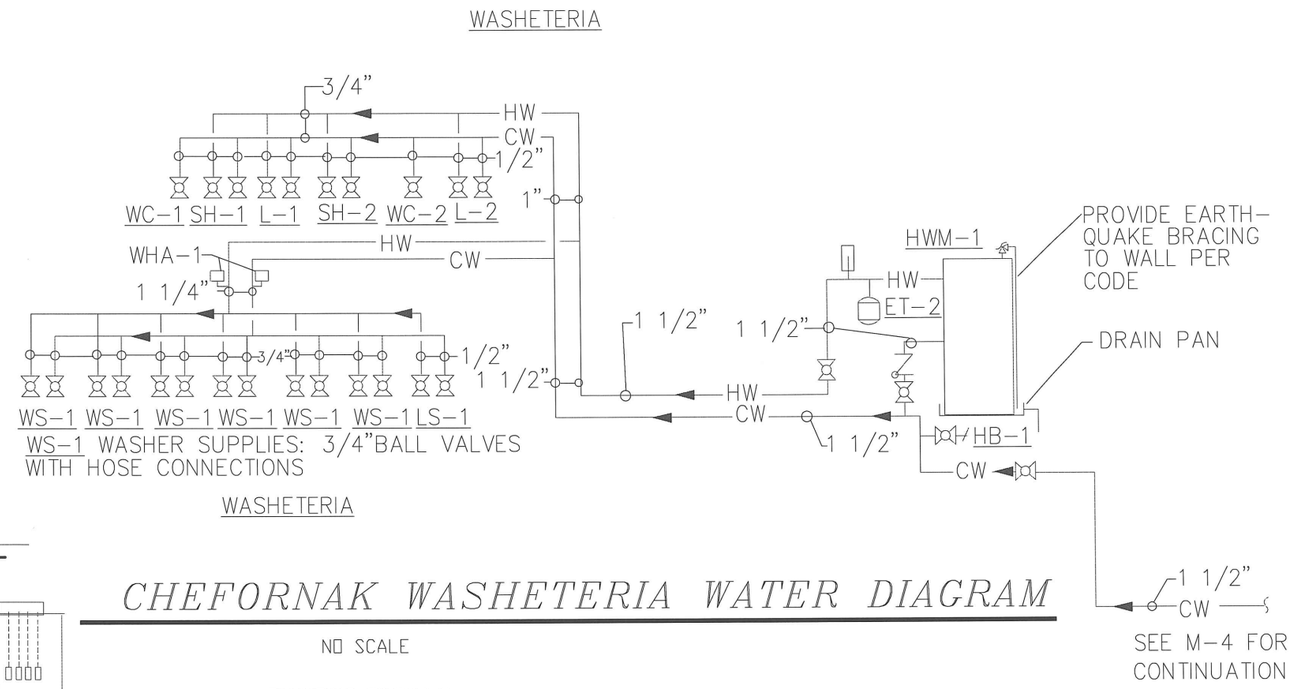

CHEFORNAK WASHETERIA WATER DIAGRAM

NO SCALE

PLUMBING PIPING MATERIAL

INSOLATION VALVES: BALL VALVES UP TO 2 INCH.
WATER STOPS: WHEEL HANDLE TYPE
WATER PIPING: TYPE L COPPER, WROUGHT FITTINGS OR PEX
WASTE AND VENT PIPING: ABS, DWV COPPER, OR APPROVED
WHA-1 WATER HAMMER ARRESTORS: SMITH 5005 OR EQUAL

PLUMBING FIXTURE CONNECTION SCHEDULE

FIXTURE	WASTE	VENT	CW	HW	DESCRIPTION
LS-1	2"IND	1 1/2"	1/2"	1/2"	FLOOR MOUNT LAUNDRY SINK
L-1	1 1/2"	1 1/4"	1/2"	1/2"	LAVITORY
L-2	1 1/2"	1 1/4"	1/2"	1/2"	DUPLEX LIFT STATION-SEE CIVIL
WC-1	3"	2"	1/2"		WATER CLOSET-FLUSH TANK
WC-2	3"	2"	1/2"		SHOWER
FD-1	2"	1 1/2"			FLOOR DRAIN-WOOD FLOOR TYPE
FD-2	2"IND				FLOOR DRAIN-WOOD FLOOR TYPE
HB-1			1/2"		WHEEL HANDLE TYPE
WS-1			3/4"	3/4"	WASHER WATER SUPPLY
ET-2				3/4"	EXPANSION TANK
WD-1	4"IND				WASHER DRAIN
SH-1	2"	1 1/2"	1/2"	1/2"	SHOWER-HANDICAP
SH-2	2"	1 1/2"	1/2"	1/2"	SHOWER

PLUMBING FIXTURES

L-1 LAVITORY: WALL MOUNT VITROUS CHINA HANDICAP TYPE WITH SINGLE LEVER HANDICAP MIXING FAUCET: MFG: KOHLER WITH 4 INCH CENTERS AND DELTA FAUCET W/ POP UP DRAIN.
PROVIDE WASTE PIPE COVER FOR HANDICAP PROTECTION UNDER LAV.

WC-1 WATER CLOSET: TANK TYPE ELONGATED BOWL FLUSH TANK TYPE TOILET HANDICAP HEIGHT, WITH OPEN FRONT SEAT. (WHITE COLOR)
MFG: KOHLER OR EQUAL, SEAT: BEMIS OR EQUAL

SH-1 SHOWER: 36 X 36 HANDICAP SHOWER MODULE: ACRYLIC FIBERGLASS REENFORCED. ONE PIECE BARRIER FREE. TWO STAINLESS STEEL GRAB BARS, FOLD DOWN RH SEAT
SINGLE LEVER ANTI SCALD VALVE WITH WAND, VERTICAL ADJUSTIBLE WAND HOLDER.
MFG; KOHLER K12100-C WITH K-9132 DRAIN, DELTA FAUCET OR APPROVED EQUAL

L-2 LAVITORY: WALL MOUNT VITROUS CHINA HANDICAP TYPE WITH SINGLE LEVER HANDICAP MIXING FAUCET: MFG: KOHLER WITH 4 INCH CENTERS AND DELTA FAUCET W/ POP UP DRAIN.

WC-2 WATER CLOSET: TANK TYPE ELONGATED BOWL FLUSH TANK TYPE TOILET
COMFORT HEIGHT, WITH OPEN FRONT SEAT. (WHITE COLOR)
MFG: KOHLER OR EQUAL, SEAT: BEMIS OR EQUAL

SH-2 SHOWER: 36 X 36 SHOWER MODULE: ACRYLIC FIBERGLASS REENFORCED. WITH INTEGRAL SOAP LEDGES. SINGLE LEVER HANDLE FAUCET WITH TOP SPRAY NOZZLE
MFG; KOHLER SONATA WITH K-9132 DRAIN, K9459 ACCESSORY KIT, DELTA FAUCET/ SPRAY OR APP EQUAL

LS-1 LAUNDRY SINK: FREE STANDING STAINLESS STEEL SINK. 18" X 18" WITH BACKSPLASH. MIXING FAUCET WITH SWING SPOUT. MFG: ADVANCE TABCO 4-18-18 SINK W/ REGENCY FAUCET OR EQUAL

FD-1 FLOOR DRAIN. GENERAL DUTY TYPE SUITABLE FOR FLOOR IN AREA. ADJ HGT. MFG: SMITH OR EQUAL

FD-2 FLOOR DRAIN. GENERAL DUTY TYPE SUITABLE FOR FLOOR IN AREA. ADJ HGT. MFG: SMITH OR EQUAL

ET-2 EXPANSION TANK: MFG: AMTROL ST-12-C OR EQUAL

HWM-1: WATER MAKER: TANK TYPE WITH HYDRONIC HEATING COIL, DOUBLE WALL, 80 GALLON TANK 202 GPH DEMAND. MFG: SUPER STOR ULTRA SSU-80-DW WITH MFG RECOMMENDED CONTROLLER

HWM-2: WATER MAKER: TANK TYPE WITH HYDRONIC HEATING COIL, DOUBLE WALL, 45 GALLON TANK 70 GPH DEMAND. MFG: SUPER STOR ULTRA SSU-45-DW WITH TC-1 MFG RECOMMENDED CONTROLLER

CAPSTONE ENGINEERING LLC
MECHANICAL ENGINEERS
12110 BUSINESS BLVD. STE 6, PMB 169
EAGLE RIVER, ALASKA 99577
TELEPHONE & FAX 541-684-8665

STATE OF ALASKA 49TH FREDERICK H BELZ ME 6698 REGISTERED PROFESSIONAL ENGINEER

PLUMBING DIAGRAMS AND DETAILS
CHEFORNAK WASHETERIA
CHEFORNAK, ALASKA

DATE: OCT 14, 2013
DRAWN: F.H. BELZ
CHKD:
SCALE: AS NOTED
REVISED:
JOB NO. C389

SHEET NO. M-2.5 | 4 OF 8

G:\ACAD\CHEFORNAK\2013 Washeteria and Water Tank\From Others\Fred Belz\C389 CHEFORNAK M-2.5 PLUMBING DIAGRAMS AND DETAILS.dwg, 10/15/2013 3:32:53 PM, cmerz, \\Ce2main\LANIER MP C2050/LD520C PCL 6

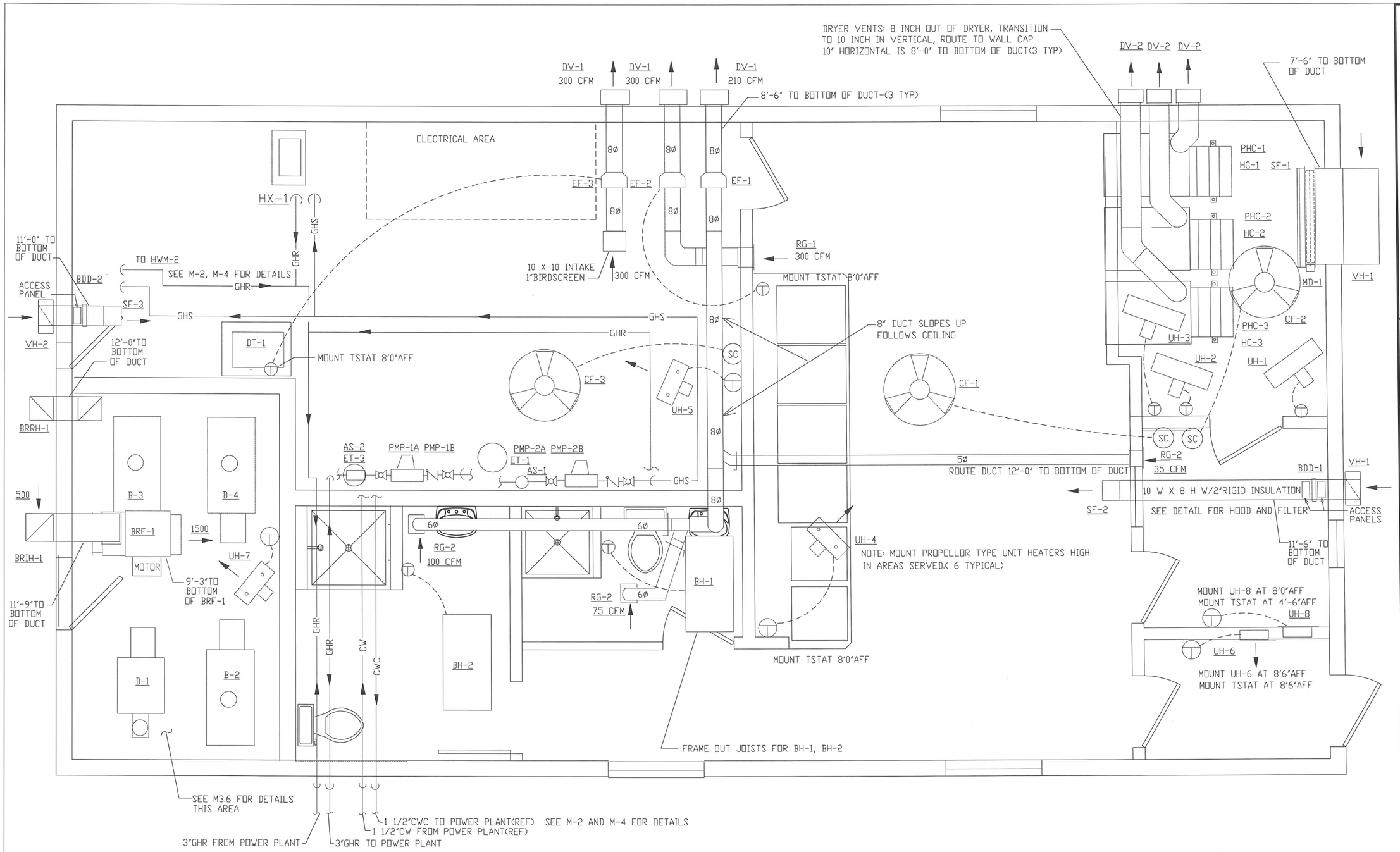

CHEFORNAK WASHETERIA MECH ROOM LAY OUT

NO SCALE

CAPSTONE ENGINEERING LLC
MECHANICAL ENGINEERS
12110 BUSINESS BLVD STE 6 PMB 169
EAGLE RIVER, ALASKA 99577
TELEPHONE & FAX 541-884-8065

STATE OF ALASKA 14TH FREDERICK H BELZ ME 6698 REGISTERED PROFESSIONAL ENGINEER

MECHANICAL PLAN
CHEFORNAK WASHETERIA
CHEFORNAK, ALASKA

DATE: OCTOBER 14 2013
DRAWN: F.H. BELZ
CHKD:
SCALE: AS NOTED
REVISED:
JOB NO. C389

SHEET NO. M-3.0 | 5 OF 8

G:\ACAD\CHEFORNAK\2013 Washeteria and Water Tank\From Others\Fred Beltz\C389 M-3.0 MECHANICAL PLAN-CHEFORNAK.dwg, 10/15/2013 3:31:26 PM, cmerz, \\Ce2main\LANIER MP C2050/LD520C PCL 6

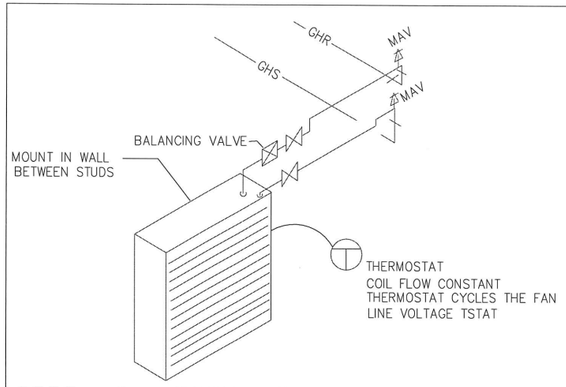

UH-6, UH-8 DETAIL

NO SCALE

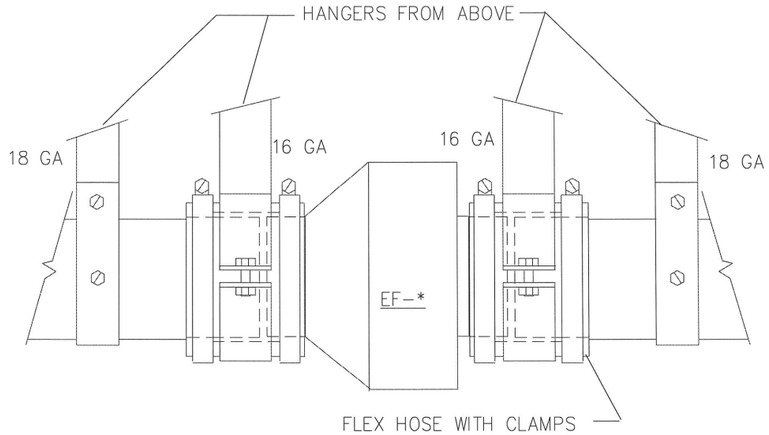

EF-1, EF-2, EF-3 DETAIL

NO SCALE

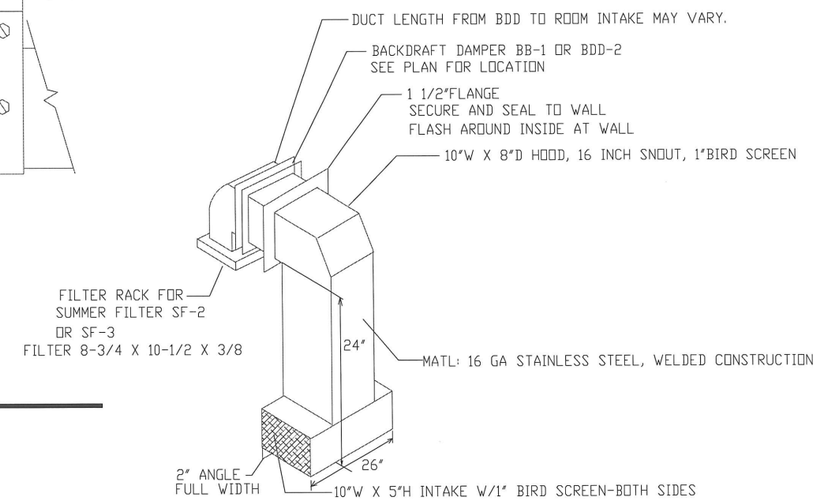

VH-1, VH-2 INTAKE HOODS

NO SCALE

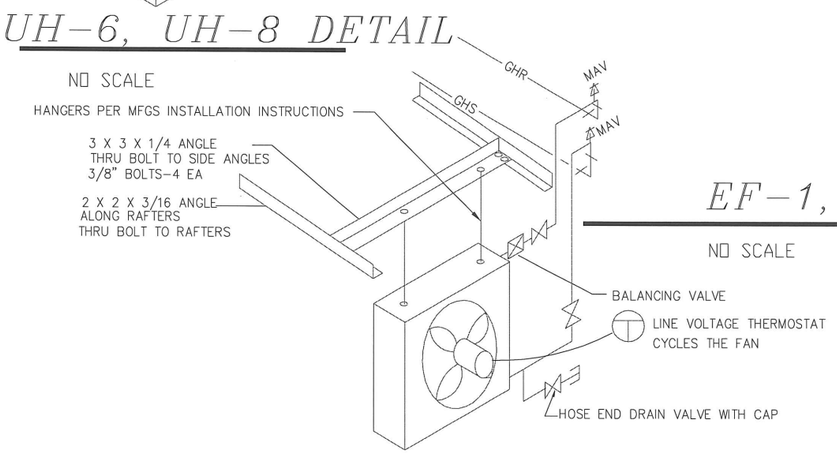

UH-1, UH-2, UH-3, UH-4, UH-5, UH-7 UNIT HEATER MOUNTING DETAIL

NO SCALE

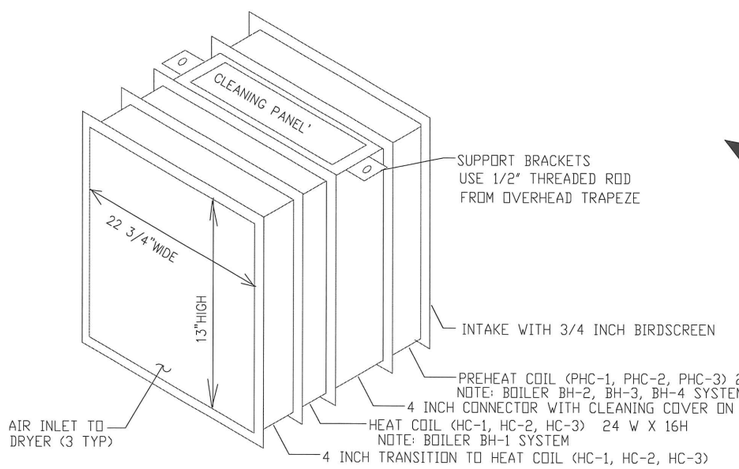

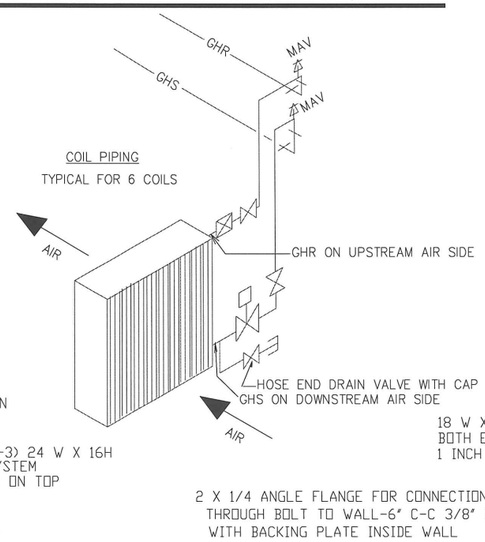

DRYER HEAT COILS- PHC AND HC

NO SCALE

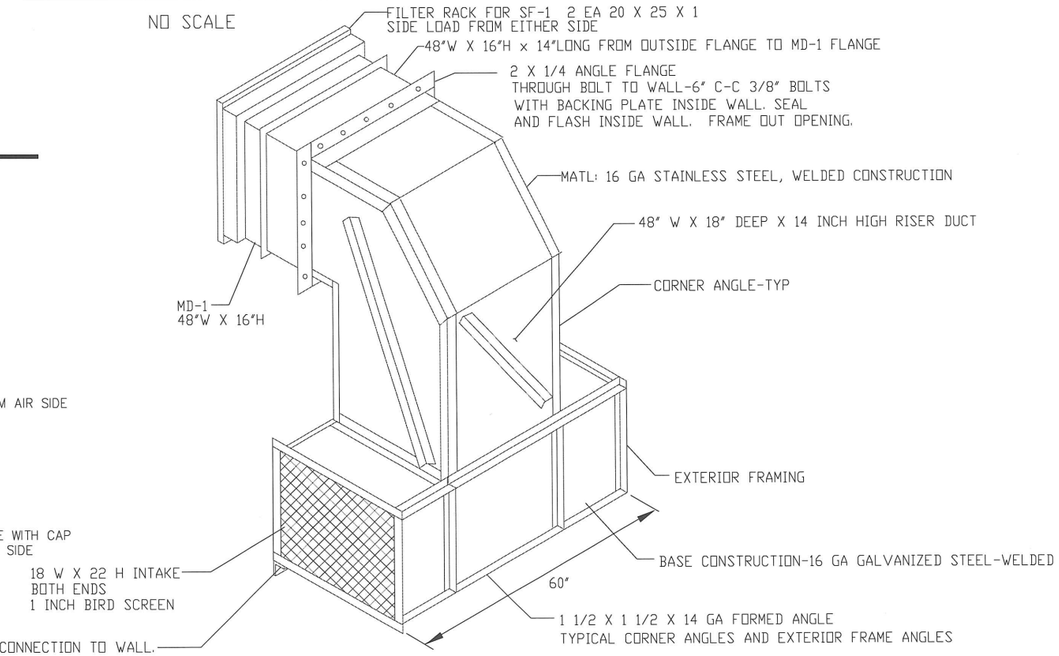

DIH-1 INTAKE HOOD DETAIL

NO SCALE

CAPSTONE ENGINEERING LLC
MECHANICAL ENGINEERS
12110 BUSINESS BLVD. STE 6 - PMB 169
EAGLE RIVER, ALASKA 99577
TELEPHONE & FAX 541-984-8065

STATE OF ALASKA 49TH FREDERICK H BELZ ME 6698 REGISTERED PROFESSIONAL ENGINEER

HVAC AND HEATING DETAILS
CHEFORNAK WASHETERIA
CHEFORNAK, ALASKA

DATE: OCTOBER 14, 2013
DRAWN: F.H. BELZ
CHKD:
SCALE: AS NOTED
REVISED:
JOB NO. C389

SHEET NO. M-3.5
6 OF 8

G:\ACAD\CHEFORNAK\2013 Washeteria and Water Tank\From Others\Fred Beltz\C389 CHEFORNAK M-3.5 HVAC DETAILS.dwg, 10/15/2013 3:32:32 PM, cmerz, \\Ce2main\LANIER MP C2050/LD520C PCL 6

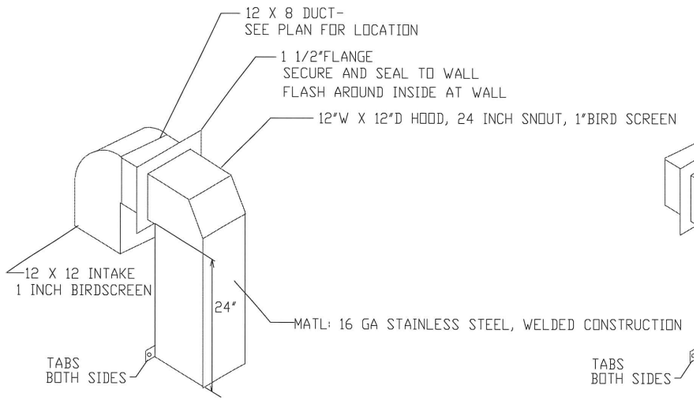

BOILER ROOM RELIEF HOOD BRRH-1

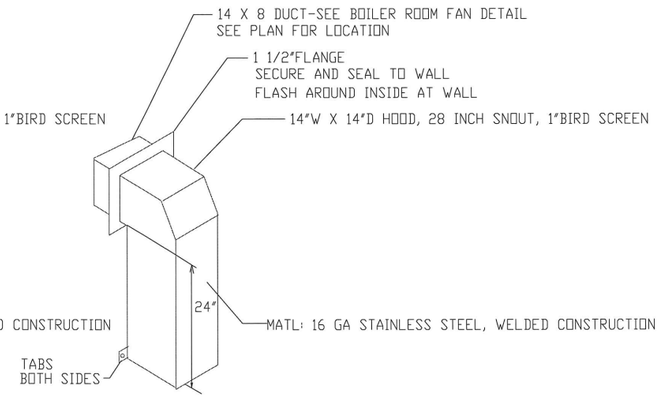

BOILER ROOM INTAKE HOOD BRIH-1

BOILER ROOM HOODS

NO SCALE

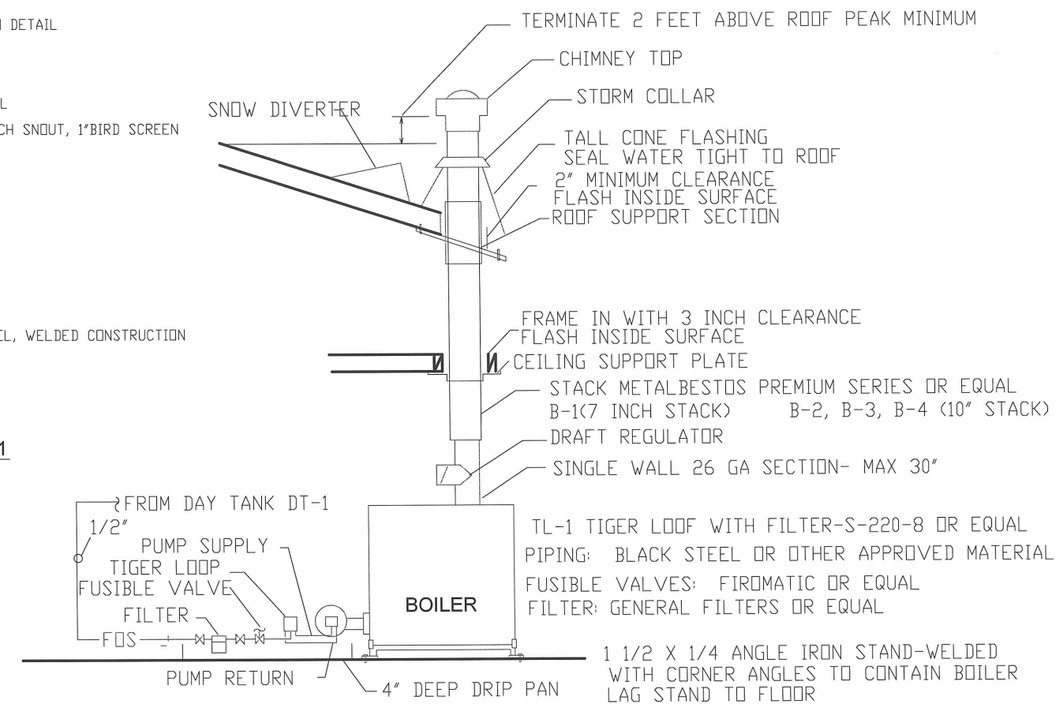

BOILER FUEL OIL PIPING DIAGRAM(4 TYP)

NO SCALE

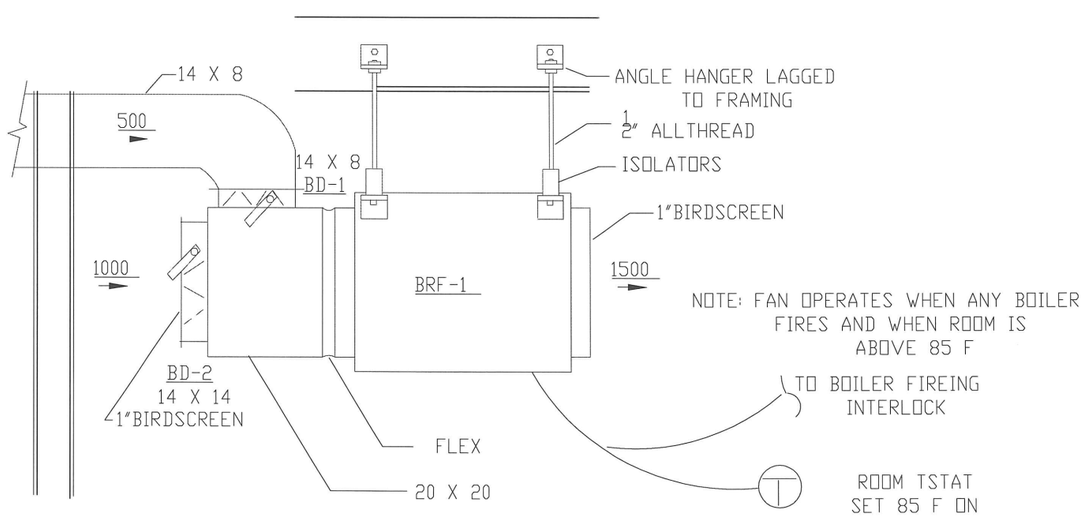

BOILER ROOM FAN BRF-1

NO SCALE

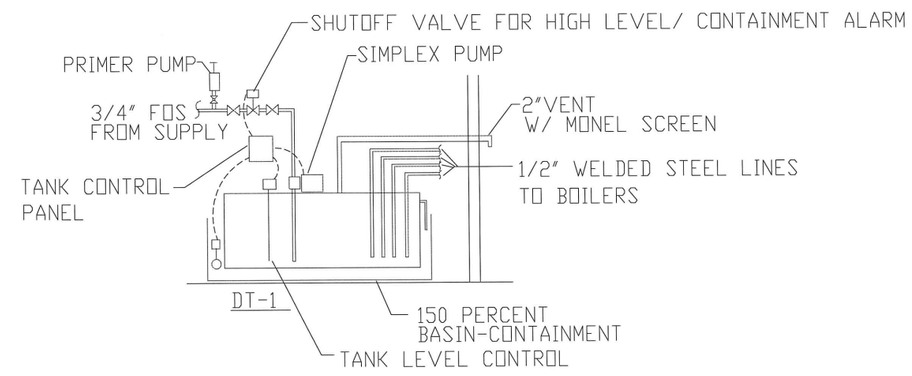

DAY TANK PIPING DIAGRAM

NO SCALE

CAPSTONE ENGINEERING LLC
MECHANICAL ENGINEERS
12110 BUSINESS BLVD STE 6 PMB 169
EAGLE RIVER, ALASKA 99577
TELEPHONE & FAX 541-884-8865

STATE OF ALASKA
9TH
FREDERICK H BELZ
ME 6698
REGISTERED PROFESSIONAL ENGINEER

BOILER ROOM DETAILS
CHEFORNAK WASHETERIA
CHEFORNAK, ALASKA

DATE: OCTOBER 14, 2013
DRAWN: F.H. BELZ
CHKD:
SCALE: AS NOTED
REVISED:
JOB NO. C389

SHEET NO. M-3.6
7 OF 8

G:\ACAD\CHEFORNAK\2013 Washeteria and Water Tank\From Others\Fred Beltz\C389 CHEFORNAK M-3.6 BOILER DETAILS.dwg, 10/15/2013 3:32:12 PM, cmerz, \\Ce2main\LANIER MP C2050/LD520C PCL 6

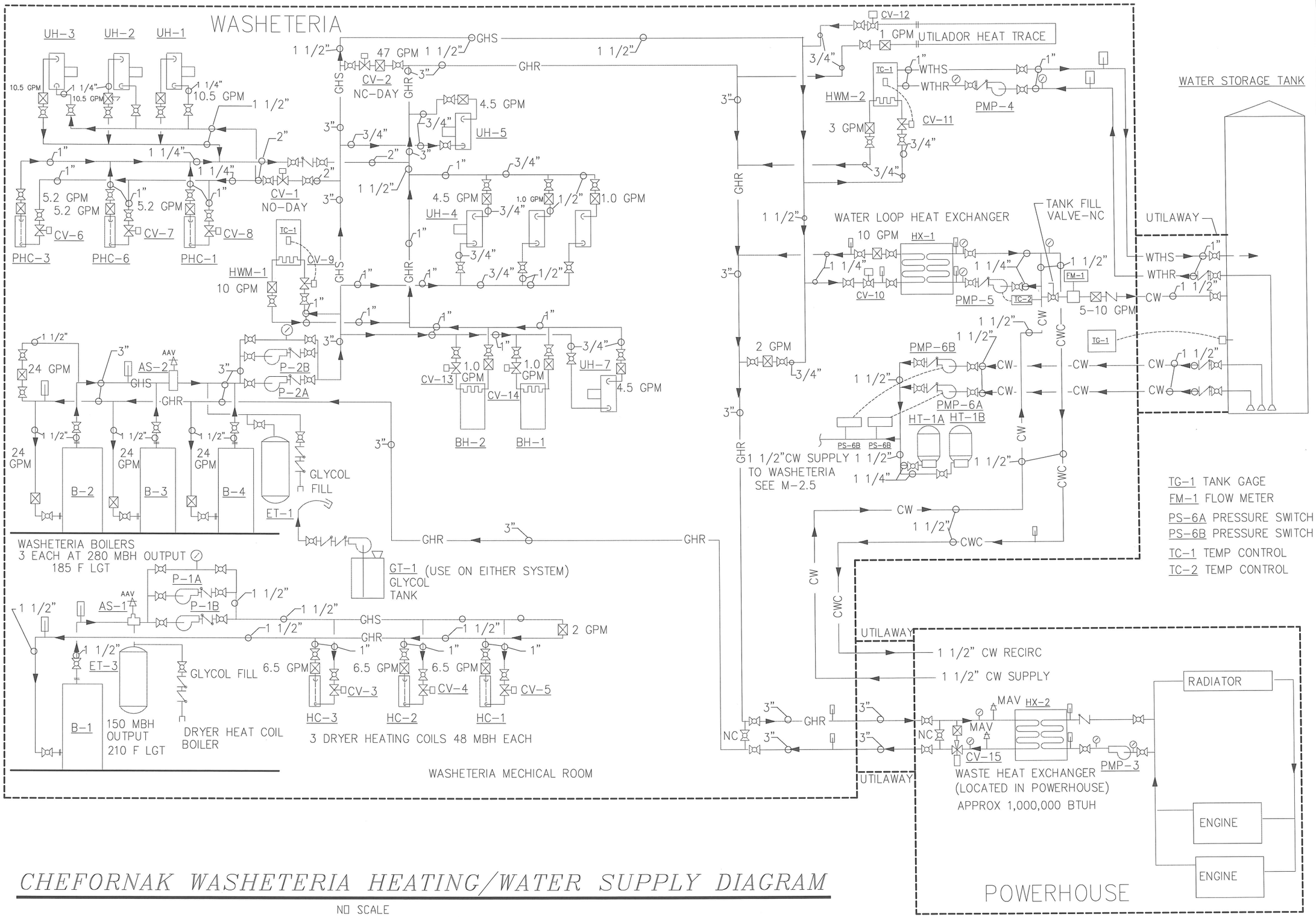

CHEFORNAK WASHETERIA HEATING/WATER SUPPLY DIAGRAM

NO SCALE

CAPSTONE ENGINEERING LLC
MECHANICAL ENGINEERS
12110 BUSINESS BLVD. STE 6 - PMB 169
EAGLE RIVER, ALASKA 99577
TELEPHONE & FAX 541-884-8065

STATE OF ALASKA
9TH
FREDERICK H BELZ
ME 6698
REGISTERED PROFESSIONAL ENGINEER

HEATING AND WATER SUPPLY DIAGRAM
CHEFORNAK WASHETERIA
CHEFORNAK, ALASKA

DATE: OCT 14, 2013
DRAWN: F.H. BELZ
CHKD:
SCALE: AS NOTED
REVISED:
JOB NO. C389

SHEET NO. M-4.0
8 OF 8

G:\ACAD\CHEFORNAK\2013 Washeteria and Water Tank\From Others\Fred Beltz\C389 M-4.0 Chefornak Washeteria Heating Diagram.dwg, 10/15/2013 3:30:31 PM, cmerz, \\Ce2main\LANIER MP C2050/LD520C PCL 6

ELECTRICAL LEGEND

(NOTE: THIS IS A STANDARD LEGEND AND NOT ALL SYMBOLS ARE NECESSARILY USED.)

Symbol	Description
	EXTERIOR LIGHT FIXTURE, POLE MOUNTED, HEADS AS SHOWN
	HAND HOLE
E	ELECTRIC VAULT
PC	PHOTOCELL CONTROL
	LUMINAIRE – TYPE AS NOTED ON PLAN
	LUMINAIRE – WALL MOUNTED: TYPE AS NOTED ON PLAN
	LUMINAIRE – EMERGENCY LIGHT
	TRACK LIGHTING – TRACK LENGTH AS SCALED: TYPE AS NOTED ON PLAN
	EMERGENCY LIGHTING UNIT (WALL; CEILING; REMOTE HEAD): TYPE "E", UON
	EMERGENCY BATTERY TO POWER REMOTE HEAD(S); TYPE "ERB", UON
	EXIT SIGN (CEILING; WALL); SHADE DENOTES FACE; ARROWS AS INDICATED; TYPE "X", UON
$	SWITCH – SINGLE POLE, SINGLE THROW, UON
$3	SWITCH – THREE WAY
$4	SWITCH – FOUR WAY
$a	SWITCH CONTROL FOR FIXTURES DENOTED WITH "a" APPENDED TO CIRCUIT NUMBER
$L	SWITCH – LOW VOLTAGE
$D	SWITCH – ELECTRONIC DIMMER SWITCH COMPATIBLE WITH LIGHT FIXTURE
$K	SWITCH – KEYED
$P	SWITCH – PILOT LIGHT
$T	SWITCH – INTEGRAL MOTOR OVERLOAD
$V	SWITCH – VARIABLE SPEED CONTROL
$OC	LIGHT CONTROL OCCUPANCY SENSOR – WALL SWITCH BOX MOUNTED
OC	LIGHT CONTROL OCCUPANCY SENSOR – CEILING MOUNTED
	POWER DISTRIBUTION PANELBOARD
	METERING DEVICE
CT	CURRENT TRANSFORMER ENCLOSURE
	POWER PANELBOARD ([NEW – SURFACE; RECESSED], [EXISTING – SURFACE; RECESSED])
T	TRANSFORMER: APPROX. PHYSICAL SIZE AS SCALED; ACTUAL RATING AS NOTED ON ONE-LINE DIAGRAMS
	MOTOR CONNECTION
	COMBINATION BATHROOM FAN/LIGHT: TYPE AS NOTED ON PLAN
	NON-FUSED SAFETY SWITCH
F	FUSED SAFETY SWITCH
	ENCLOSED CIRCUIT BREAKER SWITCH
	MOTOR STARTER
	COMBINATION MOTOR STARTER SAFETY SWITCH
	PUSH BUTTON CONTROL STATION
J	JUNCTION BOX OR EQUIPMENT CONNECTION – FLEX OR RECEPTACLE AS REQUIRED (CEILING; WALL; FLOOR)
J FSD	POWER CONNECTION TO FSD CONTROLLED BY FIRE ALARM SYSTEM
	SIMPLEX RECEPTACLE
	DUPLEX RECEPTACLE
	DOUBLE DUPLEX RECEPTACLE
	DUPLEX RECEPTACLE – SPLIT WIRED FOR SWITCH CONTROL OF LOWER OUTLET
G	DUPLEX RECEPTACLE – GFCI PROTECTED
	DUPLEX RECEPTACLE – GFCI PROTECTED MOUNTED +48" AFF
	DUPLEX RECEPTACLE – GFCI PROTECTED MOUNTED ABOVE COUNTERTOP
	DUPLEX RECEPTACLE – MOUNTED ABOVE COUNTERTOP
	DUPLEX RECEPTACLE – FLOOR MOUNTED FIRE RATED POKE THROUGH, UON
	DOUBLE DUPLEX RECEPTACLE – FLOOR MOUNTED FIRE RATED POKE THROUGH, UON
	RECEPTACLE – PENDANT MOUNTED FROM CEILING
	RECEPTACLE – FLUSH MOUNTED IN CEILING
D	DRYER RECEPTACLE – 30A, 3 POLE, 4 WIRE NEMA 14–30R
	ELECTRIC RANGE RECEPTACLE – 50A, 3 POLE, 4 WIRE, NEMA 14–50R
	SPECIAL PURPOSE RECEPTACLE – NEMA CONFIGURATION AS NOTED (SURFACE; WALL)
	GROUND CONNECTION POINT
	DUAL CHANNEL SURFACE MOUNTED RACEWAY – LENGTH AS SCALED
	SINGLE CHANNEL SURFACE MOUNTED RACEWAY – LENGTH AS SCALED
	TELECOMMUNICATION OUTLET (WALL; FLOOR)
	TELEPHONE OUTLET
TV	TELEVISION OUTLET (WALL; CEILING)
	DUAL CHANNEL SERVICE POLE
	TELECOMMUNICATION FLOOR STANDING RACK
	TELECOMMUNICATION WALL MOUNTED RACK
TMGB	TELECOMMUNICATION MAIN GROUNDING BUS
TGB	TELECOMMUNICATION GROUNDING BUS
	CONTROL PANEL – TYPE AS NOTED (SURFACE; RECESSED)
	FIRE ALARM CONTROLLED MAGNETIC DOOR HOLDER / RELEASE
	ABORT STATION
CO	CARBON MONOXIDE DETECTOR
	HEAT DETECTOR – RATE OF RISE
135°	HEAT DETECTOR – FIXED TEMPERATURE AS NOTED
	SMOKE DETECTOR – PHOTOELECTRIC TYPE
M	SMOKE DETECTOR – MULTI-SENSOR TECHNOLOGY TYPE
	SMOKE DETECTOR – DUCT MOUNTED
BR	SMOKE DETECTOR – BEAM RECEIVER
BT	SMOKE DETECTOR – BEAM TRANSMITTER
	FLAME DETECTOR
	LINE TYPE HEAT SENSITIVE CABLE DETECTOR
	FIRE ALARM HORN
	FIRE ALARM STROBE
	FIRE ALARM COMBINATION HORN/STROBE
P	FIRE ALARM PULL STATION
FCP	FIRE ALARM CONTROL PANEL
FSA	FIRE SYSTEM ANNUNCIATOR PANEL
HCP	HALON CONTROL PANEL
	FIRE ALARM SPEAKER STROBE
	WATER FLOW BELL – 120V CONTROLLED BY FLOW SWITCH
	FIRE ALARM FLOW SWITCH
	FIRE ALARM TAMPER SWITCH
M	MICROPHONE INPUT JACK
M	MICROPHONE INPUT JACK – FLOOR MOUNTED
	INTERCOM CALL BUTTON
	INTERCOM ADMINISTRATION PHONE
S	SPEAKER (WALL; CEILING)
	CLOCK SPEAKER COMBINATION WALL MOUNT UNIT
	CLOCK – WALL MOUNTED
CR	SECURITY ACCESS CARD READER
DS	DOOR CONTROL SOLENOID
DM	DOOR MAGNETIC CONTACT
GB	SECURITY SYSTEM – GLASS BREAK SENSOR
MS	SECURITY SYSTEM – MOTION SENSOR
PS	SECURITY SYSTEM – DOOR POSITION SENSOR
MD	SECURITY SYSTEM – REQUEST TO EXIT MOTION DETECTOR
KP	SECURITY SYSTEM – ACCESS KEY PAD
IR	SECURITY SYSTEM – MOTION SENSOR – NARROW PATTERN
SC	SECURITY SYSTEM – CAMERA
	ACCESS PANEL
	LINETYPE DENOTING CABLE TRAY
	LINETYPE/LINEWEIGHT DENOTING FUTURE WORK
	LINETYPE/LINEWEIGHT DENOTING EXISTING WORK TO REMAIN
	LINETYPE/LINEWEIGHT DENOTING NEW WORK
	LINETYPE/LINEWEIGHT DENOTING DEMO WORK
X	DENOTES AVAILABLE FAULT CURRENT

EQUIPMENT TAG LEGEND

LUMINAIRES — A3[6] / 2H–15a
- LUMINAIRE TYPE (UNDERLINED)
- THE NUMBER IN BRACKETS INDICATES HOW MANY TYPICAL LUMINAIRES OF THIS TYPE ARE IN THIS AREA
- CIRCUIT AND SWITCHLEG
- PANEL
- TYPICAL LUMINAIRE

CONTROL SWITCHES — $a/b
- LOWER CASE LETTER DENOTES SWITCH LEG FOR CORRESPONDING LUMINAIRE CONTROL
- UPPERCASE LETTER OR NUMBER DENOTES SWITCH CONFIGURATION

EQUIPMENT CONNECTIONS — AHU–1 / A–1,3,5
- EQUIPMENT ID (UNDERLINED) REFER TO EQUIPMENT CONNECTION SCHEDULE FOR REQUIREMENTS
- TYPICAL EQUIPMENT (MOTOR STARTER SHOWN)
- CIRCUIT NUMBER(S)
- PANEL

RECEPTACLES — +48" / 2L–1,3 / L5–20R
- MOUNTING HEIGHT AFF
- PANEL
- CIRCUIT NUMBER(S)
- NEMA CONFIGURATION FOR SPECIAL RECEPTACLES (UNDERLINED)

ABBREVIATIONS

(E)	EXISTING
A	AMPERES
AC	ABOVE COUNTER
AFF	ABOVE FINISHED FLOOR
AFCI	ARC FAULT CIRCUIT INTERRUPTER
AFG	ABOVE FINISHED GRADE
AHJ	AUTHORITY HAVING JURISDICTION
AIC	AMPS INTERRUPTING CAPACITY
C	CONDUIT OR CELCIUS
CAT	CATEGORY
CB	CIRCUIT BREAKER
CO	CONDUIT ONLY
CT	CURRENT TRANSFORMER
(D)	DEMOLISH
DISC	DISCONNECT
EGC	EQUIPMENT GROUNDING CONDUCTOR
F	FAHRENHEIT
FAA	FIRE ALARM ANNUNCIATOR
FACP	FIRE ALARM CONTROL PANEL
FHP	FRACTIONAL HORSEPOWER
FLA	FULL LOAD AMPS
FSD	FIRE SMOKE DAMPER
FT	FEET
FU	FUSE
G	GROUND FAULT CIRCUIT INTERRUPTER
GEC	GROUNDING ELECTRODE CONDUCTOR
HP	HORSEPOWER
ID	IDENTIFICATION
IN	INCHES
KVA	KILOVOLT–AMPERE
KW	KILOWATT
LRA	LOCKED ROTOR AMPS
LTG	LIGHTING
MCA	MINIMUM CIRCUIT AMPACITY
MDP	MAIN DISTRIBUTION PANEL
MDS	MAIN DISTRIBUTION SWITCHBOARD
MFS	MAXIMUM FUSE SIZE
(N)	NEW
NC	NORMALLY CLOSED
NO	NORMALLY OPEN
P	POLES
PC	PHOTO CELL
PH, ø	PHASE
PNL	PANEL
PRI	PRIMARY
REC	RECEPTACLE
(R)	RELOCATED
RIB	RELAY IN A BOX (MOTOR RATED)
SCCR	SHORT CIRCUIT CURRENT RATING
SE	SERVICE ENTRANCE RATED
SEC	SECONDARY
SSEBJ	SUPPLY SIDE EQUIPMENT BONDING JUMPER
SVC	SERVICE
TELECOM	TELECOMMUNICATION
TGB	TELECOMMUNICATION GROUNDING BUSBAR
TMGB	TELECOMMUNICATION MAIN GROUNDING BUSBAR
TYP	TYPICAL
UON	UNLESS OTHERWISE NOTED
V	VOLTS
VA	VOLT–AMPERES
VFD	VARIABLE FREQUENCY DRIVE
W	WATTS OR WIRE
WG	WIRE GUARD
WP	WEATHERPROOF (NEMA 4 RATED)
XFMR	TRANSFORMER

MOUNTING HEIGHT SCHEDULE

PANELBOARDS (TOP)	+70"
SPECIAL SYSTEM PANELS (TOP)	+66"
POWER METER BASE (CENTER LINE OF SOCKET)	+66"
CONTACTORS, MOTOR STARTERS, DISCONNECT SWITCHES (TOP)	+66"
RECEPTACLES IN OFFICE AREAS	+18"
RECEPTACLES IN NON–FINISHED AND MECHANICAL SPACES	+46"
ABOVE COUNTER DEVICES (DENOTED "AC" OR BY SYMBOL)	SEE NOTES
WALL MOUNTED SWITCHES	+46"
TELECOMMUNICATION OUTLETS	+18"
WALL MOUNTED TELEPHONE OUTLET (DENOTED "W")	+54"
CLOCK OUTLETS	+80" TO BOTTOM
HORNS/STROBES/HORN STROBES/DOORBELL RINGER	+80" TO BOTTOM
PULL STATIONS, PUSH BUTTONS, DOORBELL PUSHBUTTON	+46"

NOTES:
1) COORDINATE AND INSTALL ALL EQUIPMENT AND DEVICES WITH THE ARCHITECTURAL PLANS AND ANY SPECIFICALLY DENOTED REQUIREMENTS.
2) MOUNTED HEIGHTS SHALL PREVAIL UNLESS OTHERWISE NOTED OR FIELD CONDITIONS REQUIRE DEVIATION.
3) MOUNTING HEIGHTS ARE FROM FINISHED FLOOR TO THE CENTERLINE OF THE DEVICE UNLESS OTHERWISE NOTED.
4) COORDINATE MOUNTING HEIGHTS AND LOCATIONS OF OUTLETS DENOTED AS ABOVE COUNTER TO BE INSTALLED 6" ABOVE COUNTERS OR BACKSPLASHES, WHICHEVER IS HIGHER.

GENERAL REQUIREMENTS

1. ALL ELECTRICAL WORK SHALL BE INSTALLED IN ACCORDANCE WITH ALL REQUIREMENTS OF THE 2008 EDITION OF THE NATIONAL ELECTRIC CODE, STATE, MUNICIPAL, AND FEDERAL LAWS, AMENDMENTS AND/OR ORDINANCES GOVERNING THE PROJECT. IF IN ANY INSTANCE THE PLANS AND SPECIFICATIONS ARE IN DIRECT CONFLICT WITH SUCH CODES, LAWS, AND/OR ORDINANCES, THE CODE, LAWS, AND/OR ORDINANCES SHALL HAVE JURISDICTION AND THE WORK IN QUESTION SHALL BE INSTALLED ACCORDING TO THE CODES, LAWS, AND/OR ORDINANCES. ALL WORK SHALL BE PERFORMED UNDER THE SUPERVISION OF A CERTIFIED ELECTRICIAN.
2. THE CONTRACTOR SHALL OBTAIN ALL REQUIRED CONSTRUCTION PERMITS AND PAY ALL ASSOCIATED FEES.
3. MATERIALS AND EQUIPMENT SHALL BE COMMERCIAL GRADE AND ACCEPTABLE TO THE AUTHORITY HAVING JURISDICTION AS SUITABLE FOR THE USE INTENDED. ALL ELECTRICAL EQUIPMENT SHALL INCLUDE THE SEAL OF A NATIONALLY RECOGNIZED TESTING LABORATORY FOR THE PURPOSE FOR WHICH IT IS INSTALLED. WHENEVER POSSIBLE, SIMILAR ITEMS SHALL BE SUPPLIED BY THE SAME MANUFACTURER THROUGHOUT THE PROJECT.
4. COORDINATE AND PROVIDE THE EQUIPMENT WITH THE SHORT CIRCUIT CURRENT RATING (SCCR) FOR THE AVAILABLE FAULT CURRENT AT THE POINT OF THE SYSTEM WHERE INSTALLED. SERIES RATING OF EQUIPMENT IS ACCEPTABLE. PROVIDE ARC FAULT WARNING LABELS ON ALL PANELBOARDS, MCC UNITS AND SIMILAR EQUIPMENT PER NEC REQUIREMENTS.
5. THE FOLLOWING WIRING METHODS SHALL BE ACCEPTABLE FOR INSTALLATION OF ELECTRICAL CIRCUITS: TYPE MC CABLE, INTERMEDIATE METAL CONDUIT, RIGID METAL CONDUIT, RIGID NONMETALLIC CONDUIT (FOR UNDERGROUND USE ONLY), ELECTRICAL METALLIC TUBING, FLEXIBLE METALLIC TUBING, FLEXIBLE METAL CONDUIT, AND LIQUID TIGHT FLEXIBLE CONDUIT. ALL WIRING METHODS SHALL INCLUDE AN EQUIPMENT GROUNDING CONDUCTOR TO BE INSTALLED THEREIN AND SIZED FOR THE CIRCUITS SERVED.
6. ALL CONDUCTORS SHALL BE COPPER. ALL CONDUCTORS IN UNHEATED SPACES OF THE BUILDING OR LOCATED OUTSIDE OF THE BUILDING ARE REQUIRED TO HAVE TYPE XHHW 90 DEGREE C INSULATION. ALL CONDUCTORS LOCATED IN HEATED SPACES CAN BE XHHW OR THHN 90 DEGREE C INSULATION UNLESS NOTED OTHERWISE. CONDUCTOR AMPACITY SHALL BE BASED ON TABLE 310–16 OF THE NEC. USE 60–DEGREE C. RATING FOR CIRCUITS TERMINATING ON DEVICES RATED BELOW 100A. USE 75–DEGREE C RATING FOR CIRCUITS TERMINATING ON DEVICES AND IN ENCLOSURES RATED 100A AND OVER. DERATE CONDUCTORS PER NEC REQUIREMENTS.
7. CONCEAL ALL ELECTRICAL RACEWAYS, BOXES, CABLING, CONDUCTORS AND THE LIKE IN WALLS, BELOW FLOORS, SLABS OR ABOVE FINISHED CEILING SPACES. ELECTRICAL EQUIPMENT AND WIRING CAN BE EXPOSED IN MECHANICAL ROOMS, TELECOMMUNICATION ROOMS OR WHERE SPECIFICALLY NOTED.
8. DO NOT ROUTE RACEWAYS ON THE EXTERIOR SURFACE OF THE BUILDING, ROOF, OR FLOOR UNLESS SPECIFICALLY NOTED OTHERWISE.
9. PROVIDE ALL WIRING AND EQUIPMENT IN WET AND EXTERIOR LOCATIONS USING EQUIPMENT AND WIRING METHODS RATED FOR WET ENVIRONMENTS.
10. ALL CABLING LOCATED IN CEILING SPACES THAT ARE PLENUMS SHALL BE PLENUM RATED.
11. PROVIDE ACCESS PANELS FOR ALL LOCATION NECESSARY TO ACCESS ELECTRICAL EQUIPMENT AND JUNCTION BOXES. ACCESS PANELS SHALL BE FIRE RATED EQUAL TO OR EXCEEDING THE ADJACENT WALL OR CEILING CONSTRUCTION AND PAINTED TO MATCH.
12. CONNECT ALL EMERGENCY LIGHTING UNITS AND MODULES TO THE LOCAL AREA LIGHTING CIRCUITS AHEAD OF ANY SWITCHES OR RELAYS. LOCATE REMOTE TEST SWITCHES AND INDICATOR LIGHTS AS NECESSARY FOR TEST SWITCHES ON EMERGENCY MODULES.
13. SEAL ALL PENETRATIONS. SEAL PENETRATIONS AT ALL FIRE WALLS WITH APPROVED FIRE STOPPING COMPOUND.
14. OUTLET BOXES LOCATED BACK TO BACK IN FIRE RATED WALLS SHALL BE SPACED A MINIMUM OF 2 FEET HORIZONTALLY OR PROVIDE AN APPROVED FIRE PROTECTIVE MATERIAL PLACED ON OR AROUND THEM LISTED FOR THE FIRE RATING OF THE WALL.
15. CONTRACTOR SHALL SUBMIT REQUEST FOR SUBSTITUTION IN WRITING TO THE ENGINEER.
16. PROVIDE SEISMIC SUPPORT AND DESIGN PER IBC REQUIREMENTS.
17. THE ELECTRICAL CONTRACTOR SHALL CONTACT EACH SERVING UTILITY CO. AND VERIFY EXACT SERVICE REQUIREMENTS FOR POWER, TELEPHONE AND CABLE TV. THE CONTRACTOR SHALL COORDINATE AND PROVIDE ALL REQUIREMENTS OF EACH SERVING UTILITY AND ALL EQUIPMENT SHALL CONFORM TO THE SERVING UTILITY STANDARDS AND REQUIREMENTS.

EIC ENGINEERS, INC
ELECTRICAL ENGINEERS
6927 OLD SEWARD HWY, SUITE 200
ANCHORAGE, AK 99518
T 907.349.9712
F 907.349.9713
www.eiceng.com
EIC JOB #E13-1941

RECORD DRAWING CERTIFICATE
THESE DRAWINGS REFLECT RECORDED INFORMATION OBTAINED DURING CONSTRUCTION. INFORMATION PROVIDED HEREIN IS ACCURATE TO THE BEST OF MY KNOWLEDGE.
NAME DATE

SCALE:
BAR IS ONE INCH ON ORIGINAL DRAWING 0 1"
IF NOT ONE INCH ON THIS SHEET, ADJUST SCALES ACCORDINGLY

CONSTRUCTION RECORD
FIELD BOOK
STAKING
FOREMAN
AS-BUILT
INSPECTOR

WASHETERIA AND WATER TANK
ELECTRICAL LEGEND AND GENERAL REQUIREMENTS
CHEFORNAK, ALASKA

CE2 ENGINEERS, INC.
PO BOX 232946 ANCHORAGE, AK 99523 PH: 907-349-1010 FAX: 907-349-1015

REVISION | BY | DATE

Project No.
Date MAY 2013
Designed BLS
Drawn BLS
Approved EDC

Sheet No. E1.1

SHEET NOTES

1. PROVIDE 480V 3ø SERVICE FEED FROM EXISTING POWER PLANT. SEE ONE-LINE DIAGRAM FOR DETAIL.

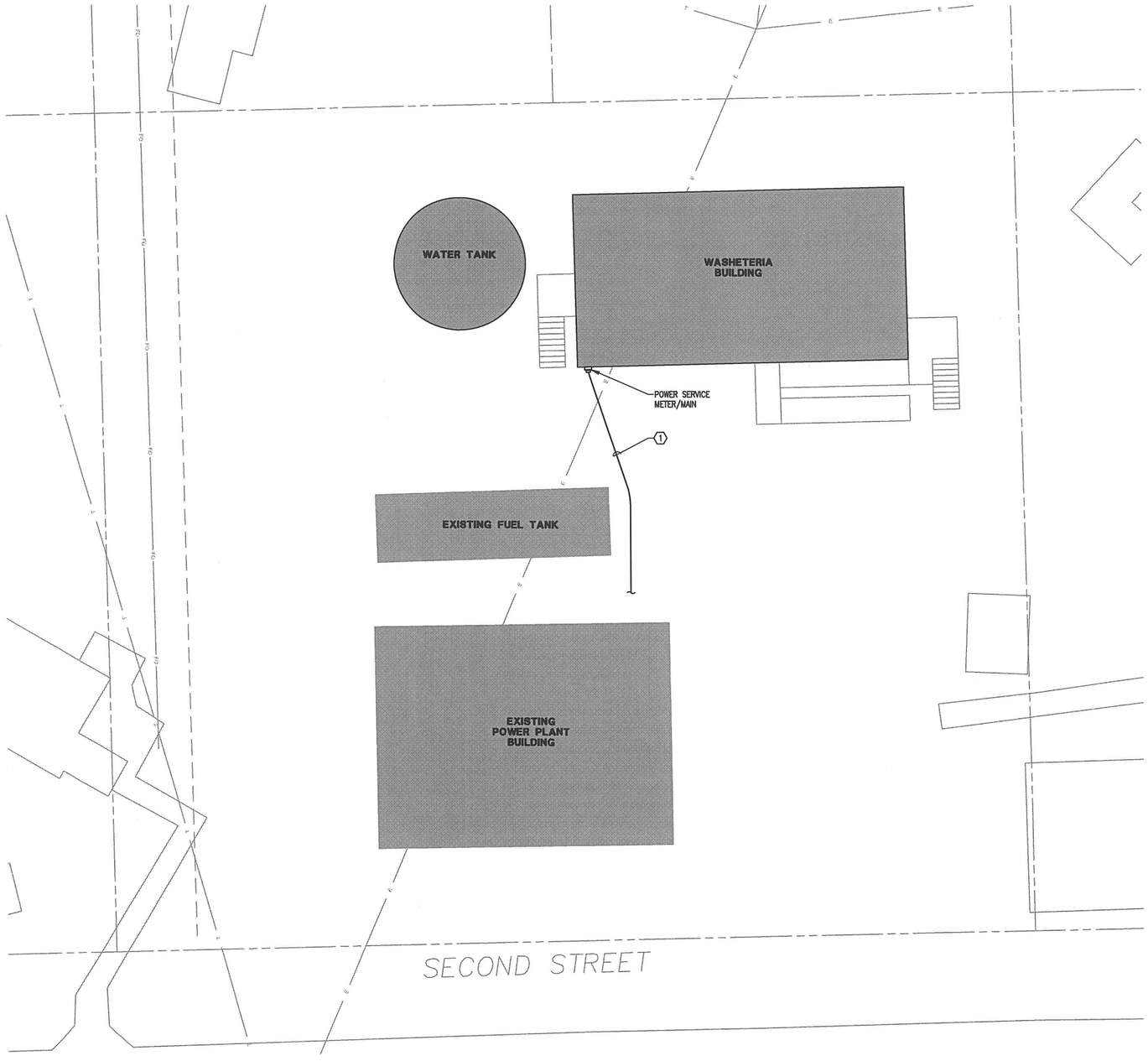

1 E2.1 **ELECTRICAL SITE PLAN**

SCALE: 1" = 10'-0"

10 0 5 10 20 40

PLAN N

EIC ENGINEERS, INC
ELECTRICAL ENGINEERS

6927 OLD SEWARD HWY, SUITE 200
ANCHORAGE, AK 99518
T 907.349.9712
F 907.349.9713
www.eiceng.com

EIC JOB #E13-1941

RECORD DRAWING CERTIFICATE

THESE DRAWINGS REFLECT RECORDED INFORMATION OBTAINED DURING CONSTRUCTION. INFORMATION PROVIDED HEREIN IS ACCURATE TO THE BEST OF MY KNOWLEDGE.

NAME DATE

SCALE:

BAR IS ONE INCH ON ORIGINAL DRAWING

0 1"

IF NOT ONE INCH ON THIS SHEET, SCALE SCALES ACCORDINGLY

CONSTRUCTION RECORD

FIELD BOOK

STAKING

FOREMAN

AS-BUILT

INSPECTOR

STATE OF ALASKA 49th ... ENGINEER

PRELIMINARY NOT FOR CONSTRUCTION

CE2 ENGINEERS, INC.
PO BOX 202846 ANCHORAGE, AK 99503 PH: 907-349-1018 FAX: 907-349-1015

REVISION	BY	DATE

Project No. ___ MAY 2013

Date ___ BLS

Designed ___ BLS

Drawn ___ EDC

Approved ___

WASHETERIA AND WATER TANK

ELECTRICAL SITE PLAN

CHEFORNAK, ALASKA

Sheet No.

E2.1

DETAIL EQUIPMENT

1. SERVICE METER/MAIN– SE RATED, NEMA 3R, 200A BUS, 125A MAIN CB, 480V, 3ø, 4W. CIRCLE AW OR EQUIVALENT.
2. TRANSFORMER 'T1'– NEMA 1, 480VΔ PRIMARY, 208Y/120V SECONDARY. SQUARE D OR EQUIVALENT.
3. PANEL 'A' SECTION 1– NEMA 1, 225A, 208Y/120V, 3ø, 4W, 225A MAIN CB, 42 SPACE, WITH FEED THRU LUGS. SQUARE D TYPE NQOD OR EQUIVALENT.
4. PANEL 'A' SECTION 2– NEMA 1, 225A, 208Y/120V, 3ø, 4W, MAIN LUGS ONLY, 42 SPACE. SQUARE D TYPE NQOD OR EQUIVALENT.
5. OPTIONAL MANUAL TRANSFER SWITCH 'MTS–1'– NEMA 3R, 200A, 480Y/277V, 3ø, 4W, 4–POLE. ASCO OR EQUIVALENT.

DETAIL NOTES

1. PROVIDE 125A 480V 3ø POWER SERVICE FEEDER FROM SPARE/SPACE IN EXISTING POWER PLANT PANEL.

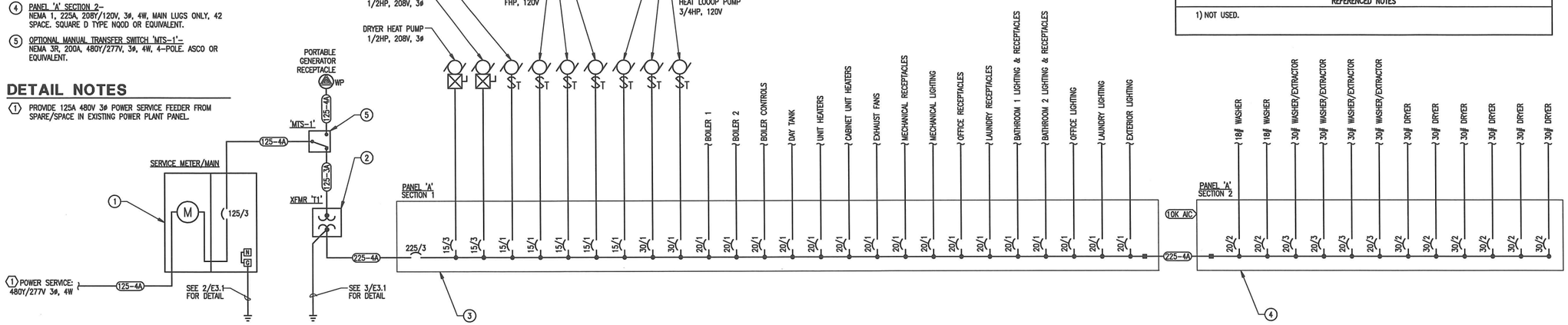

1 POWER ONE-LINE DIAGRAM
E3.1 SCALE: NONE

FEEDER SCHEDULE

TAG	COPPER	OPTIONAL ALUMINUM	NOTES
125–3A	1.5"C, (3)1 AWG, (1)6 AWG EGC	2"C, (3)2/0 AWG, (1)4 AWG EGC	
125–4A	1.5"C, (4)1 AWG, (1)6 AWG EGC	2"C, (4)2/0 AWG, (1)4 AWG EGC	
225–4A	2.5"C, (4)4/0 AWG, (1)4 AWG EGC	2.5"C, (4)300 KCMIL, (1)2 AWG EGC	

STANDARD NOTES

A) ALUMINUM CONDUCTORS MAY BE USED IN LIEU OF COPPER IF ACCEPTABLE TO OWNER.

REFERENCED NOTES

1) NOT USED.

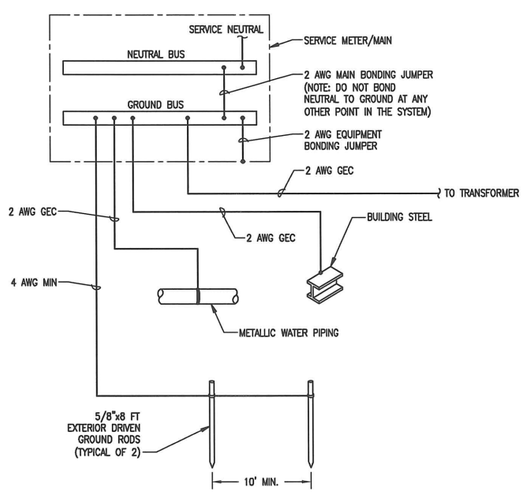

DETAIL NOTES

1. BOND ALL PIPING AND BUILDING DISCONTINUITIES TO PROVIDE ELECTRICALLY CONTINUOUS SYSTEM. PROVIDE BOND JUMPER EQUAL TO GROUNDING ELECTRODE CONDUCTOR FOR THAT SYSTEM.
2. PROVIDE RACEWAY FOR ALL CONDUCTORS. RACEWAY TO BE METALLIC IN PLENUM AIR SPACES. WHERE METALLIC RACEWAY IS USED BOND EACH END TO CONDUCTOR.
3. ALL CONDUCTOR SIZES SHOWN ARE COPPER.

2 GROUNDING SYSTEM DIAGRAM
E3.1 SCALE: NONE

REQUIRED MINIMUM ELECTRODE CONDUCTOR SIZE

TRANSFORMER SECONDARY LARGEST CONDUCTOR*	ELECTRODE CONDUCTOR SIZE
2 OR SMALLER	8
1 OR 1/0	6
2/0 OR 3/0	4
OVER 3/0 THROUGH 350 KCMIL	2
OVER 350 KCMIL THROUGH 600 KCMIL	1/0
OVER 600 KCMIL THROUGH 1100 KCMIL	2/0
OVER 1100 KCMIL	3/0

*LARGEST SUM OF THE AREAS OF CORRESPONDING PARELLED CONDUCTORS OF A SET.

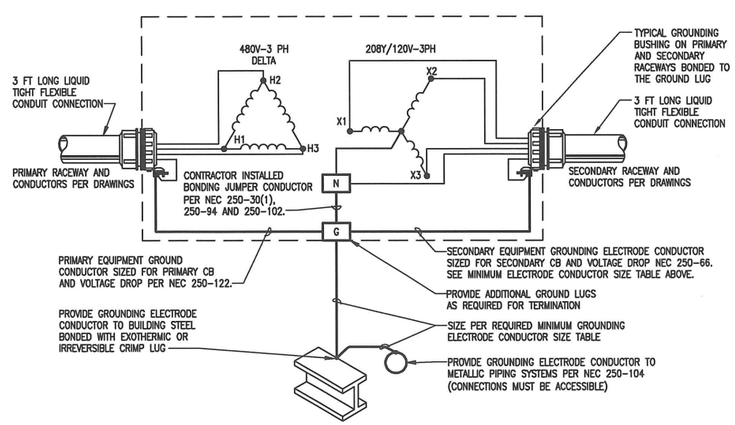

3 TYPICAL TRANSFORMER GROUNDING DETAIL
E3.1 SCALE: NONE

EIC ENGINEERS, INC
ELECTRICAL ENGINEERS
6927 OLD SEWARD HWY, SUITE 200
ANCHORAGE, AK 99518
T 907.349.9712
F 907.349.9713
www.eiceng.com
EIC JOB #E13-1941

RECORD DRAWING CERTIFICATE
THESE DRAWINGS REFLECT RECORDED INFORMATION OBTAINED DURING CONSTRUCTION. INFORMATION PROVIDED HEREIN IS ACCURATE TO THE BEST OF MY KNOWLEDGE.
NAME DATE

SCALE:
BAR IS ONE INCH ON ORIGINAL DRAWING 0 1"
IF NOT ONE INCH ON THIS SHEET, ADJUST SCALES ACCORDINGLY

CONSTRUCTION RECORD
FIELD BOOK
STAKING
FOREMAN
AS-BUILT
INSPECTOR

PRELIMINARY NOT FOR CONSTRUCTION
STATE OF ALASKA 49TH
ELECTRICAL ENGINEER

WASHETERIA AND WATER TANK
ELECTRICAL DIAGRAMS AND DETAILS
CHEFORNAK, ALASKA

CE2 ENGINEERS, INC.
PO BOX 230246 ANCHORAGE, AK 99523 PH: 907-346-1010 FAX: 907-346-1015

REVISION	BY	DATE

Project No. ____ Date MAY 2013
Designed BLS
Drawn BLS
Approved EDC

Sheet No.
E3.1