# CITY OF CHEFORNAK
## FACULTATIVE LAGOON PROJECT

### THREE CELL LAGOON SYSTEM &
### 2,100 LF FORCE MAIN EXTENSION

In Cooperation with the State of Alaska
Department of Environmental Conservation
Village Safe Water Program

ISSUED FOR AGENCY REVIEW 65%

## SHEET INDEX


| No. | Title |
|---|---|
| | COVER SHEET |
| G1.0 | GENERAL NOTES |
| G1.1 | LEGEND, DESIGN CRITERIA |
| G1.2 | VICINITY MAP |
| G2.1 | SURVEY CONTROL |
| G3.1 | TEST HOLE BORING LOGS |
| G3.2 | TEST HOLE BORING LOGS |
| G3.3 | TEST HOLE BORING LOGS |
| G3.4 | TEST HOLE BORING LOGS |
| G4.0 | LAGOON OPERATING PLAN |
| C1.0 | KEY MAP |
| C1.1 | LAGOON SITE PLAN |
| C1.2 | LAGOON CROSS SECTIONS |
| C1.3 | LAGOON INLET STRUCTURE |
| C1.4 | CELL TRANSFER STRUCTURE |
| C1.5 | OUTLET DISCHARGE PIPE / OVERFLOW |
| C1.6 | TYPICAL CONTROL STUCTURE |
| C2.1 | PLAN AND PROFILE |
| C2.2 | PLAN AND PROFILE |
| C2.3 | PLAN AND PROFILE |
| C2.4 | PLAN AND PROFILE |
| C5.1 | ARCTIC PIPE DETAILS |
| C5.2 | LAGOON DETAILS |
| C5.3 | JUNCTION BOX AND DETAILS |
| C5.4 | ARCTIC PIPE HELICAL PIER SUPPORT DETAILS |
| C5.5 | FENCING DETAILS |
| C5.6 | JUNCTION BOX ASSEMBLY DETAILS |
| C5.7 | WINTER TRAIL CROSSSING DETAILS |


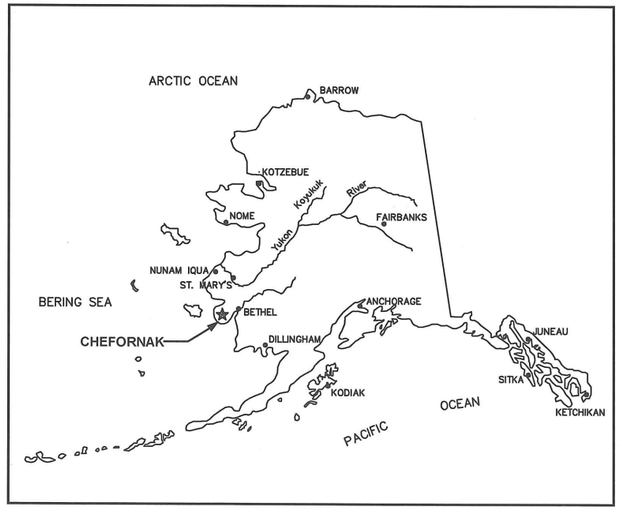


LOCATION MAP


CE2 ENGINEERS, INC.
PO BOX 232946 ANCHORAGE, AK 99523 PH: 907-349-1010 FAX: 907-349-1015
ANCHORAGE, ALASKA


STATE OF ALASKA 49TH Michael R. Erdman No.6252 REGISTERED PROFESSIONAL ENGINEER
11-12-2013

CONSULTANT

### RECORD DRAWING CERTIFICATE

THESE DRAWINGS REFLECT RECORDED INFORMATION OBTAINED DURING CONSTRUCTION.
INFORMATION PROVIDED HEREIN IS ACCURATE TO THE BEST OF MY KNOWLEDGE.

NAME DATE

Project Number (Consultant) _____
VSW Project Manager _____
Construction Foreman _____
Final Design (Date) _____
ADEC Approval (Date) _____
Construction Period (From) _____ (To) _____
As-Builts (Date) _____

### PROJECT NARRATIVE

THIS PROJECT WILL CONSIST OF 2100 LF OF A HELICAL PIER-SUPPORTED HEAT TRACED FORCE MAIN EXTENDING THE SCHOOL FORCE MAIN FROM ITS CURRENT TERMINUS AT THE EXISTING TUNDRA LAGOON TO THE PROPOSED LAGOON LOCATION.

THE NEW FORCE MAIN AND LAGOON WILL BE FED FROM THE EXISTING SCHOOL LAGOON FORCE MAIN AND A NEW WASHETERIA LIFT STATION, PLUS A FUTURE HONEYBUCKET DUMP STATION NEAR THE SCHOOL AND EXISTING TEMPORARY LIFT STATION.

A NEW 3-CELL FACULTATIVE LAGOON WILL BE CONSTRUCTED ABOUT 2700 FT NORTHWEST FROM THE EXISTING SCHOOL COMPLEX. THE PROPOSED LAGOON WILL HAVE A PROJECTED 20-YEAR LIFE AND WILL TREAT 1000 GPD FROM THE COMMUNITY, 2000 GPD FROM THE WASHETERIA, AND 2000 GPD FROM THE SCHOOL, FOR A TOTAL OF 5,000 GPD.

SEASONAL DISCHARGE WILL BE TO SURROUNDING WETLANDS.

LAGOON DIKES WILL BE CONSTRUCTED USING ON-SITE SILTS WITH A LOW PERMEABILITY RATE.


G:\ACAD\CHEFORNAK\CYF1101 Sewage Lagoon\COVER.dwg, 11/12/2013 1:24:00 PM, cmerz, \\Ce2main\LANIER MP C2050/LD520C PCL 6

# GENERAL NOTES

A. GENERAL:

1. THE PROJECT SUPERINTENDENT SHALL MAINTAIN A CLEAN SET OF "AS BUILT" RECORD DRAWINGS SHOWING THE LOCATIONS AND SWING TIES TO ALL APPURTENANCES. ALL ELEVATIONS SHALL BE MARKED ASB (AS-BUILT) WITH THE CORRECT VALUE INSERTED. DRAWINGS SHALL BE KEPT CURRENT IN RED PENCIL ON A DAILY BASIS IN A NEAT, LEGIBLE FASHION. COPIES OF THE AS-BUILT DRAWINGS SHALL BE SUBMITTED TO THE CITY OF CHEFORNAK AND VSW UPON COMPLETION OF CONSTRUCTION.

2. SELECTED POINTS IN THE COMMUNITY ARE SHOWN ON SHEET G2.1, GIVING STATE PLANE COORDINATES AND ELEVATIONS.

3. EXISTING UTILITIES ARE SHOWN IN APPROXIMATE LOCATIONS TO THE BEST KNOWLEDGE OF THE ENGINEER AT THE TIME OF DESIGN. RECORDS MAY NOT BE COMPLETELY ACCURATE. THE PROJECT SUPERINTENDENT SHALL VERIFY HORIZONTAL AND VERTICAL LOCATIONS OF UTILITIES WITHIN EACH CONSTRUCTION REACH PRIOR TO BEGINNING WORK.

4. THE TOP OF DIKE ELEVATION IS ESTIMATED TO BE 2.0 FEET ABOVE THE 100-YEAR FLOOD ELEVATION.

B. ARCTIC PIPE:

1. CARRIER PIPE:
THE FORCEMAIN SHALL BE 4" HDPE, SDR 11. GRAVITY MAINS SHALL BE 8" HDPE, SDR 17. ALL HDPE PIPING SHALL BE LISTED BY THE PPI WITH A DESIGNATION OF PE4710 AND A CELL CLASSIFICATION OF PE445574C OR BETTER AS PER ASTM D3350.

2. INSULATION:
ARCTIC PIPE INSULATION SHALL BE CLOSED CELL (ASTM D2341 CELL CLASSIFICATION 550674970034) URETHANE FOAM WITH A MAXIMUM K FACTOR OF 0.155 BTU-IN/HR-SF-DEG F. THE INSULATION CORE DENSITY SHALL BE BETWEEN 3.0 AND 4.0 LBS/CF. VOIDS GREATER THAN 0.05 CUBIC INCHES BEYOND 24 INCHES OF EITHER END OF THE PIPE SECTION WILL BE CAUSE FOR REJECTION OF THE PIPE. SEE TECHNICAL SPECIFICATION FOR FURTHER REQUIREMENTS.

3. OUTER JACKET MATERIAL:
THE OUTER JACKET MATERIAL FOR ALL ARCTIC PIPE AND FITTINGS SHALL BE 16 GAUGE HELICAL CORRUGATED ALUMINUM PIPE WITH SEAMS THAT WILL WITHSTAND A HYDROSTATIC PRESSURE OF 5 FEET OF WATER WITH NO LEAKAGE.

4. HYDRONIC HEAT TRACE:
HYDRONIC HEAT TRACE (WHERE SPECIFIED) SHALL BE A MINIMUM OF 2" DIA. HDPE, SDR 11 AND LISTED BY THE PPI WITH A DESIGNATION OF PE4710 AND A CELL CLASSIFICATION OF PE445574C OR BETTER AS PER ASTM D3350.

C. CLEARING AND GRUBBING:

1. THE CONSTRUCTION CREW SHALL REMOVE BRUSH, VEGETATIVE MAT, AND OTHER OBJECTIONABLE MATERIAL WITHIN THE LAGOON FOOTPRINT. ALL GRUBBED MATERIAL SHALL BE DISPOSED OF IN THE DESIGNATED SPOILS DEPOSITION ARE WITHIN THE PROJECT PROPERTY. THE GRUBBED ORGANIC TOPSOIL SHALL BE LATER USED TO COVER AND REVEGETATE THE DIKE SIDE SLOPES.

D. EARTHWORK:

1. SIDE WALLS OF EXCAVATIONS SHALL BE SLOPED OR SUFFICIENTLY BRACED IN CONFORMANCE WITH SECTION 05.160 OF THE STATE OF ALASKA DEPARTMENT OF LABOR STANDARDS AND THE LATEST FEDERAL OSHA EXCAVATION AND TRENCHING STANDARDS. IF IT IS NECESSARY TO LEAVE AN OPEN EXCAVATION UNATTENDED, THE OPEN EXCAVATION SHALL BE ADEQUATELY SIGNED AND BARRICADED TO WARN RESIDENTS OF THE HAZARD.

2. COMPACTION OF STRUCTURAL FOUNDATIONS, PIPE ZONE MATERIALS, EMBANKMENTS AND ROADWAYS SHALL BE ACCOMPLISHED USING A MINIMUM OF THREE (3) PASSES WITH A 15,000 POUND VIBRATORY DRUM COMPACTOR. EMBANKMENT FILL SHALL BE COMPACTED IN MAXIMUM 8"-INCH LIFTS PRIOR TO SUBSEQUENT PLACEMENT OF FILL . SUPERINTENDENT SHALL COORDINATE AN INITIAL EFFORT INSPECTION WITH THE ENGINEER AND VSW TO VERIFY THE ACTUAL COMPACTIVE EFFORT REQUIRED. IF LIGHTER EQUIPMENT IS SUBSTITUTED THE LIFT DEPTH AND NUMBER OF PASSES SHALL BE ADJUSTED TO OBTAIN THE SAME COMPACTIVE EFFORT.

3. WHERE EXCAVATIONS ENCOUNTER GROUNDWATER, DEWATERING SHALL BE IMPLEMENTED AND TEMPORARY SHORING MAY BE REQUIRED TO STABILIZE THE WALLS WHILE EXCESS WATER IS ALLOWED TO DRAIN OR PUMPED OUT OF THE EXCAVATION.

E. REVEGETATION SPECIFICATION:

1. THE ENTIRE AREA DISTURBED BY CONSTRUCTION SHALL BE REVEGETATED AS QUICKLY AS GOOD CONSTRUCTION PRACTICE ALLOWS. AREAS TO BE REVEGETATED SHALL FIRST BE COVERED WITH A MINIMUM 6-INCH LAYER OF FRIABLE, LOOSELY PLACED TOPSOIL, FREE OF DEBRIS. THE FOLLOWING SEED MIXTURE AND FERTILIZER APPLICATION RATES SHALL BE APPLIED:

| SEED | NAME/TYPE | RATE | METHOD |
|---|---|---|---|
| RED FESCUE | ARCTARED | 14 LBS/ACRE | BROADCAST |
| BERING HAIRGRASS | NORCOAST | 16 LBS/ACRE | BROADCAST |
| RYE GRASS | ANNUAL | 2 LBS/ACRE | BROADCAST |
| FERTILIZER | 20-20-20 | 180 LBS/ACRE | BROADCAST |

2. EROSION CONTROL FABRIC:
USE BIODEGRADABLE JUTE MESH WITH A LIFE OF 1-2 YEARS. INSTALL ON SLOPES AFTER SEEDING AND ANCHOR SECURELY WITH GROUND STAPLES.

F. PIPELINE TESTING:

1. GENERAL:
ALL TESTING SHALL BE IN CONFORMANCE WITH THE FOLLOWING REQUIREMENTS:
ALL TESTS SHALL BE WITNESSED BY A REPRESENTATIVE DESIGNATED BY THE COMMUNITY. UPON SUCCESSFUL COMPLETION OF A TEST THE RESULTS OF THE TEST SHALL BE DOCUMENTED ON A TEST FORM AND ACKNOWLEDGED BY SIGNATURE OF THE COMMUNITY'S REPRESENTATIVE WITNESSING THE TEST AND BY THE PROJECT SUPERINTENDENT. THE SUPERINTENDENT'S RED LINED AS-BUILT DRAWINGS SHALL ALSO NOTE THE TIME AND DATE OF THE TEST, AS WELL AS THE NAME OF THE COMMUNITY'S WITNESS, FOR EACH PIPE SEGMENT TESTED.

2. FORCEMAIN TESTING:
PERFORM HYDROSTATIC TESTING OF ALL FORCEMAIN PIPING. FILL THE LINES WITH POTABLE WATER AND REMOVE AIR POCKETS PRIOR TO STARTING THE TEST. PRESSURIZE TO 100 PSI AND LEAVE FOR A MINIMUM OF 1 HOUR. AFTER THIS INITIAL PERIOD, ADD WATER TO BRING THE PRESSURE UP TO 100 PSI AND BEGIN A ONE HOUR TEST. THERE SHALL BE NO LOSS IN PRESSURE DURING THE 1 HOUR TEST FOR THE PIPING TO BE ACCEPTED.

3. GRAVITY SEWER MAIN TESTING:
THE CONSTRUCTION CREW SHALL CLEAN AND FLUSH ALL SANITARY SEWER MAINS PRIOR TO VISUAL INSPECTION (LAMPING) AND PRESSURE TESTING. EACH REACH OF SEWER MAIN SHALL BE LAMPED, MANHOLE TO MANHOLE, WITH A HIGH INTENSITY LIGHT AND LARGE MIRROR. SEGMENTS NOT LAMPING TO 7/8 OF A FULL MOON SHALL BE REALIGNED AND/OR REGRADED AS NECESSARY TO MEET THE 7/8 MOON REQUIREMENT.
ALL SEGMENTS OF COMPLETED SEWER MAIN AND OUTFALL SHALL BE PRESSURE TESTED FROM MANHOLE TO MANHOLE OR TERMINUS TO TERMINUS WITH AIR AT THE END OF CONSTRUCTION (PRIOR TO CONNECTING SEWER SERVICE LINES). AIR SHALL BE SLOWLY SUPPLIED TO THE PLUGGED PIPE INSTALLATION UNTIL THE INTERNAL AIR PRESSURE REACHES 4.0 POUNDS PER SQUARE INCH (PSI) GREATER THAN THE AVERAGE BACK PRESSURE OF ANY GROUNDWATER THAT MAY SUBMERGE THE PIPE. AT LEAST TWO (2) MINUTES SHALL BE ALLOWED FOR TEMPERATURE STABILIZATION BEFORE PROCEEDING WITH THE TEST. AT THE END OF THE STABILIZATION PERIOD THE AIR PRESSURE SHALL BE ADJUSTED TO THE TEST PRESSURE AND THE 10 MINUTE TEST PERIOD SHALL BEGIN.
THE MAXIMUM ALLOWABLE PRESSURE DROP FOR ANY SEWER MAIN SEGMENT DURING THE 10 MINUTE TEST PERIOD SHALL BE 2.7 PSI.

4. GLYCOL HEAT TRACE TESTING - PERFORM HYDROSTATIC TESTING OF GLYCOL HEAT TRACE. HYDROSTATIC TESTS SHALL BE PERFORMED AFTER INSTALLATION. FILL THE LINE WITH WATER AND REMOVE AIR PRIOR TO STARTING THE TEST. PRESSURIZE TO 1.5 X OPERATING PRESSURE (80 PSI) = 120 PSI AND LEAVE FOR A MINIMUM OF 1-HOUR. AFTER THIS INITIAL PERIOD, ADD WATER TO BRING THE PRESSURE UP TO 120 PSI AND BEGIN A 4-HOUR TEST. FOR THE GLYCOL LOOP TO BE ACCEPTED THERE SHOULD BE NO LOSS IN PRESSURE. NO VISIBLE LEAKS SHOULD BE NOTED UPON A VISUAL INSPECTION OF EACH JOINT UNDER PRESSURE.

RECORD DRAWING CERTIFICATE
THESE DRAWINGS REFLECT RECORDED INFORMATION OBTAINED DURING CONSTRUCTION. INFORMATION PROVIDED HEREIN IS ACCURATE TO THE BEST OF MY KNOWLEDGE.
NAME DATE

SCALE: AS SHOWN
BAR IS ONE INCH ON ORIGINAL DRAWING
0 1"
IF NOT ONE INCH ON THIS SHEET, ADJUST SCALES ACCORDINGLY

CONSTRUCTION RECORD
FIELD BOOK
STAKING
FOREMAN
AS-BUILT
INSPECTOR

11-12-2013

STATE OF ALASKA 49TH Michael R. Erdman No.6262 REGISTERED PROFESSIONAL ENGINEER

FACULTATIVE LAGOON
GENERAL NOTES, DESIGN CRITERIA AND LEGEND
CHEFORNAK, ALASKA

CE2 ENGINEERS, INC.
PO BOX 232048 ANCHORAGE, AK 99523 PH: 907-349-1010 FAX: 907-349-1015

| REVISION | BY | DATE |
|---|---|---|
| | | |

Project No. ____
Date OCT. 2011
Designed MRE
Drawn LAW
Approved MRE

Sheet No.
G1.0

G:\ACAD\CHEFORNAK\CYF1101 Sewage Lagoon\G1.0 GENERAL NOTES LEGEND.dwg, 11/12/2013 12:54:20 PM, cmerz, \\Ce2main\LANIER MP C2050/LD520C PCL 6

# LEGEND

| EXISTING (PLAN VIEW / PROFILE VIEW) | PROPOSED (PLAN VIEW / PROFILE VIEW) | DESCRIPTION |
|---|---|---|
| | | GROUND SURFACE |
| | | DRAINAGE/WATER FEATURE |
| FM | FM | SEWER FORCE MAIN, LIFT STATION , REDUCER, AND DOUBLE WYE CLEANOUT |
| SS | SS | SEWER SERVICE LINE |
| | | CULVERT |
| E | | BURIED ELECTRICAL LINE |
| FO | | BURIED FUEL OIL LINE |
| T | | BURIED TELEPHONE LINE |
| E | | OVERHEAD ELECTRIC |
| | | EASEMENT |
| | | UTILITY POLE |
| | | FENCE |
| | | ROADS AND TRAVELED WAYS |
| 24 | 24 | CONTOUR LINE |
| | | R.O.W. (RIGHT- OF- WAY) |
| | | SHORELINE |
| | | TREES AND/OR BRUSH |
| MAJOR / MINOR | | STRUCTURE |
| | | GROUND PROFILE |
| | | DIRECTION OF DRAINAGE |
| | | PROPERTY LINE |
| | | SECTION LINE |
| | | BLM BRASS CAPPED MONUMENT |
| 24.5 | ELEV 32.0' | BENCH MARK / SPOT ELEVATION |
| | #1012 | REBAR - ABILITY SURVEY POINT NO. |
| TRACT 3 | | YELLOW PLASTIC CAP (REBAR) / TRACT NUMBER |
| LOT 8 | | LOT NUMBER |
| | | HEAT TRACE POWER SUPPLY |

# SECTION AND DETAIL DESIGNATIONS

SECTION LETTER

B / C3.5 SECTION NTS

SHEET ON WHICH SECTION IS SHOWN

DETAIL NUMBER

1 / C3.5 DETAIL NTS

SHEET ON WHICH DETAIL IS SHOWN

# ABBREVIATIONS

| | |
|---|---|
| A.P. | ANGLE POINT (HORIZONTAL) |
| CMP | CORRUGATED METAL PIPE |
| C.O.E. | CORPS OF ENGINEERS |
| CULV. | CULVERT |
| FF | FINISHED FLOOR ELEVATION |
| G.B. | GRADE BREAK (VERTICAL) |
| G.V. | GATE VALVE |
| HDPE | HIGH DENSITY POLYETHYLENE PIPE |
| INV. | INVERT |
| IPS | IRON PIPE SIZE (INDUSTRY STANDARD OUTSIDE PIPE DIAMETER) |
| LF | LINEAR FEET |
| MFR | MANUFACTURER |
| MH | MANHOLE |
| SDR | SIDE DIMENSION RATIO |
| SHT. | SHEET |
| SS | STAINLESS STEEL |
| STA. | STATION |
| TOJ | TOP OF PIPE JACKET |
| V.B. | VALVE BOX |
| WS | WATER SURFACE |

# WORK SUMMARY

CONSTRUCT A THREE-CELL WASTEWATER TREATMENT LAGOON AND ASSOCIATED HYDRAULIC CONTROL FEATURES.

INSTALL APPROXIMATELY 2050 LF OF FORCEMAIN FROM THE EXISTING SCHOOL TUNDRA POND TO THE PROPOSED FACULTATIVE LAGOON SITE.

INSTALL A HYDRONIC HEAT TRACE AND WASTE HEAT RECOVER SYSTEM TO PROVIDE FREEZE PROTECTION OF THE LAGOON FORCEMAIN AND HONEYBUCKET DUMPING STATION.

# CONSTRUCTION SCHEDULE

THE SOILS AT THE PROPOSED LAGOON SITE ARE COMPOSED PRIMARILY OF ORGANIC AND INORGANIC SILTS. A SUCCESSFUL PROJECT WILL REQUIRE CAREFUL PLANNING TO SEQUENCE THE WORK IN A MANNER THAT BEST UTILIZES LOCAL INORGANIC SILTS. THE ANTICIPATED CONSTRUCTION SEQUENCING AND SCHEDULING IS AS FOLLOWS:

WINTER 2013-2014: INITIAL STRIPPING OF ORGANICS IS DONE IN LATE WINTER. INORGANIC SILTS ARE EXCAVATED AND STOCKPILED IN WINDROWS IN ORDER TO ALLOW FOR FROZEN MOISTURE TO THAW AND TO DRAIN OUT.

SPRING/SUMMER 2014: MATERIALS FOR FORCE MAIN AND LAGOON ARE PROCURED AND SHIPPED BY BARGE TO CHEFORNAK.

FALL/WINTER 2014-2015: FORCE MAIN IS CONSTRUCTED AS SOON AS CONDITIONS ARE ACCEPTABLE TO WORK ON THE TUNDRA. CONSTRUCTION OF DIKES WILL COMMENCE WITH PARTIALLY FROZEN SILT. BURRITO WRAPS OF SILT WILL BE CONSTRUCTED TO FORM THE DIKES. ADDITIONAL COVERING OF THE BURRITO WRAPS WILL TAKE PLACE, WITH ORGANICS ON THE OUTSIDE OF THE DIKES AND SILT OVER THE WRAPS ON THE INSIDE OF THE DIKES.

# SYSTEM STARTUP

FORCEMAIN AND LAGOON STARTUP WILL OCCUR AFTER LIFT STATION AT NEW WASHETERIA IS COMPLETED.

# STORM WATER MANAGEMENT PLAN

CONSTRUCTION SHALL BE PLANNED AND EXECUTED TO EXPEDITIOUSLY COMPLETE THE PROJECT WHILE MAINTAINING THE CONSTRUCTION SITE IN A MANNER THAT REDUCES THE POTENTIAL FOR CONTAMINATED STORM RUNOFF. SPECIFIC STEPS ARE TO INCLUDE THE FOLLOWING:

- PRIOR TO CONSTRUCTION DEVELOP A STORMWATER POLLUTION PREVENTION PLAN (SWPPP), WHICH UTILIZES THE BEST MANAGEMENT PRACTICES (BMPS) AND IS IN COMPLIANCE WITH THE NATIONAL POLLUTANT DISCHARGE ELIMINATION SYSTEM (NPDES) AND THE ALASKA CONSTRUCTION GENERAL PERMIT NO. AKR10000. THIS PLAN MUST BE APPROVED BY THE STATE OF ALASKA ADEC.
- FILE A NOTICE OF INTENT (NOI) WITH THE EPA A MINIMUM OF 7-DAYS PRIOR TO THE START OF CONSTRUCTION.
- CONSTRUCTOR SHALL BE VIGILANT WITH IMPLEMENTATION OF THE PLAN.

RECORD DRAWING CERTIFICATE

THESE DRAWINGS REFLECT RECORDED INFORMATION OBTAINED DURING CONSTRUCTION. INFORMATION PROVIDED HEREIN IS ACCURATE TO THE BEST OF MY KNOWLEDGE.

NAME DATE

SCALE: AS SHOWN

BAR IS ONE INCH ON ORIGINAL DRAWING 0 1"

IF NOT ONE INCH ON THIS SHEET, ADJUST SCALES ACCORDINGLY

CONSTRUCTION RECORD

FIELD BOOK

STAKING

FOREMAN

AS-BUILT

INSPECTOR

11-12-2013

STATE OF ALASKA 49TH Michael R. Erdman No.0252 REGISTERED PROFESSIONAL ENGINEER

FACULTATIVE LAGOON

GENERAL NOTES, DESIGN CRITERIA AND LEGEND

CHEFORNAK, ALASKA

CE2 ENGINEERS, INC.
PO BOX 223948 ANCHORAGE, AK 99523 PH: 907-349-1010 FAX: 907-349-1015

| REVISION | BY | DATE |
|---|---|---|
| | | |

Project No. ____ Date OCT. 2011 Designed LAP Drawn DDR Approved LAP

Sheet No. G1.1

G:\ACAD\CHEFORNAK\CYF1101 Sewage Lagoon\G1.1PROJECT DESCRIPTION LEGEND.dwg, 11/12/2013 12:51:18 PM, cmerz, \\Ce2main\LANIER MP C2050/LD520C PCL 6

G:\ACAD\CHEFORNAK\CYF1101 Sewage Lagoon\G1.2 VICINITY MAP.dwg, 11/6/2013 2:12:51 PM, cmerz, \\Ce2main\LANIER MP C2050/LD520C PCL 6

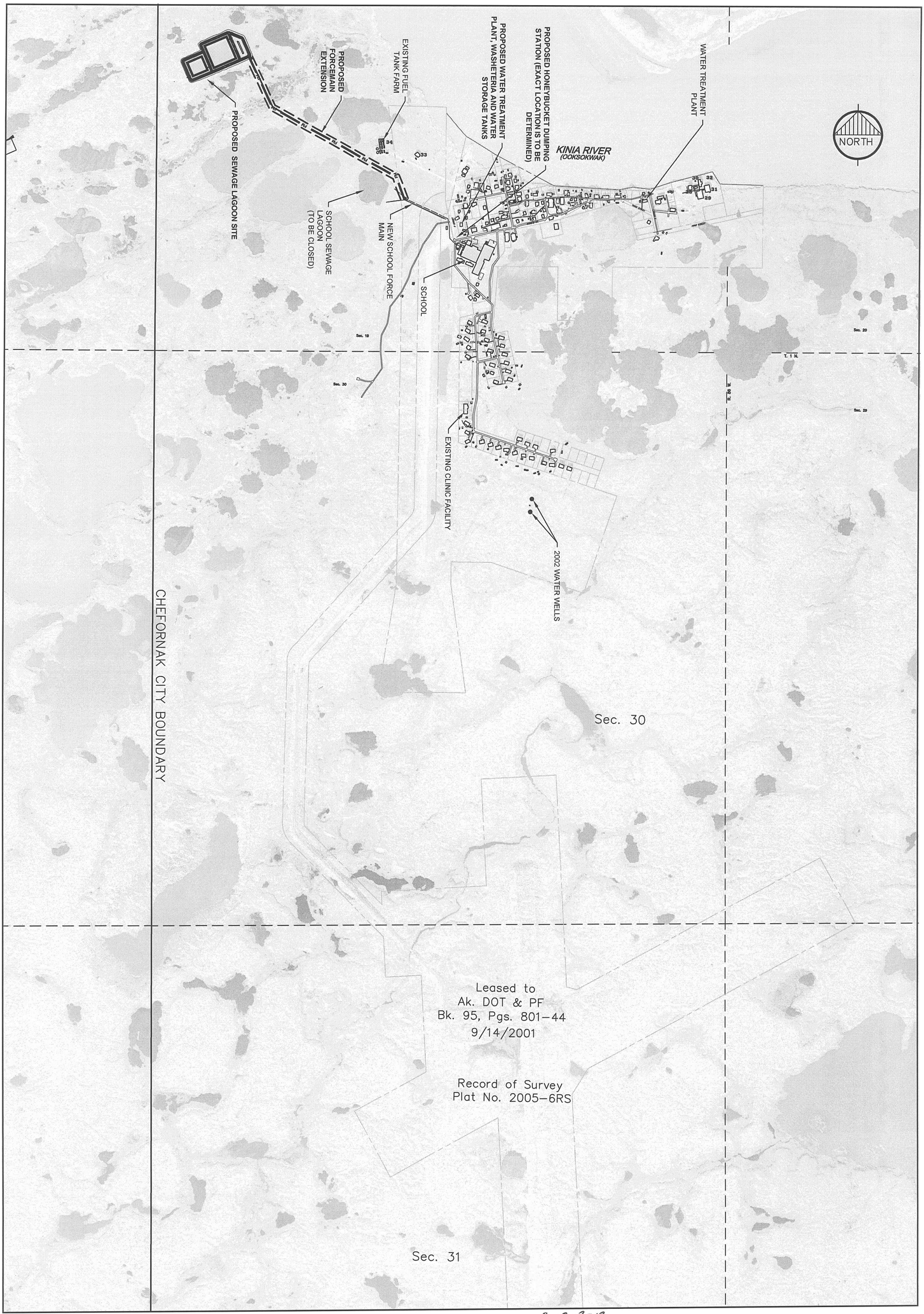


| Sheet No. | Project No. | Date | Designed | Drawn | Approved |
|---|---|---|---|---|---|
| G1.2 | | OCT. 2011 | MRE | CM | MRE |

| REVISION | BY | DATE |
|---|---|---|
| | | |

CE2 ENGINEERS, INC.
PO BOX 232948 ANCHORAGE, AK 99523 PH: 907-349-1010 FAX: 907-349-1015

FACULTATIVE LAGOON

VICINITY MAP

CHEFORNAK, ALASKA

11-12-2013

STATE OF ALASKA 49TH Michael R. Erdman No.6252 REGISTERED PROFESSIONAL ENGINEER

| CONSTRUCTION RECORD |
|---|
| FIELD BOOK |
| |
| STAKING |
| FOREMAN |
| AS-BUILT |
| INSPECTOR |

SCALE: AS SHOWN

BAR IS ONE INCH ON ORIGINAL DRAWING
0 1"
IF NOT ONE INCH ON THIS SHEET, ADJUST SCALES ACCORDINGLY

RECORD DRAWING CERTIFICATE

THESE DRAWINGS REFLECT RECORDED INFORMATION OBTAINED DURING CONSTRUCTION. INFORMATION PROVIDED HEREIN IS ACCURATE TO THE BEST OF MY KNOWLEDGE.

NAME DATE

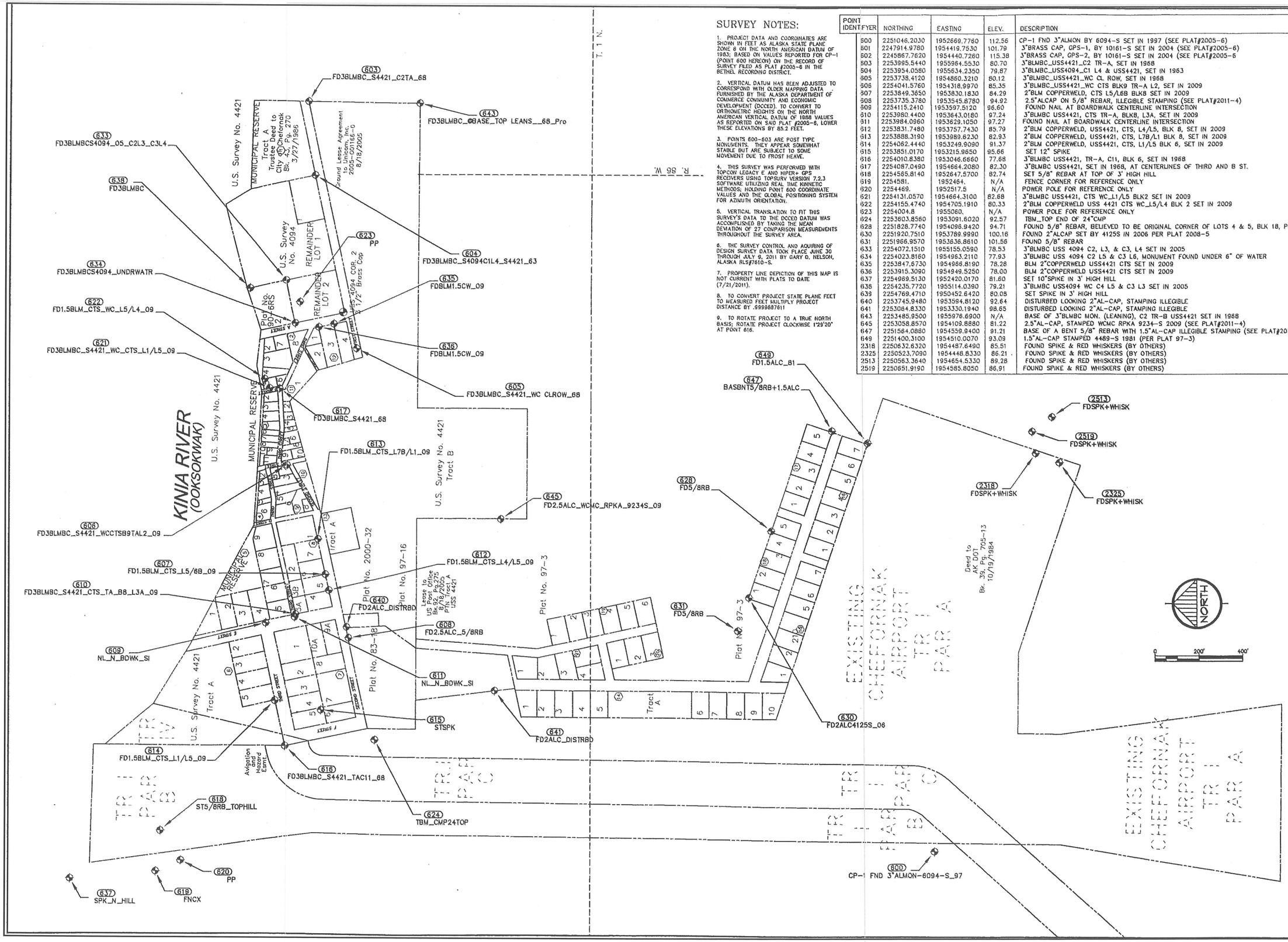


## SURVEY NOTES:

1. PROJECT DATA AND COORDINATES ARE SHOWN IN FEET AS ALASKA STATE PLANE ZONE 6 ON THE NORTH AMERICAN DATUM OF 1983; BASED ON VALUES REPORTED FOR CP-1 (POINT 600 HEREON) ON THE RECORD OF SURVEY FILED AS PLAT #2005-6 IN THE BETHEL RECORDING DISTRICT.

2. VERTICAL DATUM HAS BEEN ADJUSTED TO CORRESPOND WITH OLDER MAPPING DATA FURNISHED BY THE ALASKA DEPARTMENT OF COMMERCE COMMUNITY AND ECONOMIC DEVELOPMENT (DCCED). TO CONVERT TO ORTHOMETRIC HEIGHTS ON THE NORTH AMERICAN VERTICAL DATUM OF 1988 VALUES AS REPORTED ON SAID PLAT #2005-6, LOWER THESE ELEVATIONS BY 85.2 FEET.

3. POINTS 600-603 ARE POST TYPE MONUMENTS. THEY APPEAR SOMEWHAT STABLE BUT ARE SUBJECT TO SOME MOVEMENT DUE TO FROST HEAVE.

4. THIS SURVEY WAS PERFORMED WITH TOPCON LEGACY E AND HIPER+ GPS RECEIVERS USING TOPSURV VERSION 7.2.3 SOFTWARE UTILIZING REAL TIME KINNETIC METHODS; HOLDING POINT 600 COORDINATE VALUES AND THE GLOBAL POSITIONING SYSTEM FOR AZIMUTH ORIENTATION.

5. VERTICAL TRANSLATION TO FIT THIS SURVEY'S DATA TO THE DCCED DATUM WAS ACCOMPLISHED BY TAKING THE MEAN DEVIATION OF 27 COMPARISON MEASUREMENTS THROUGHOUT THE SURVEY AREA.

6. THE SURVEY CONTROL AND ACQUIRING OF DESIGN SURVEY DATA TOOK PLACE JUNE 30 THROUGH JULY 9, 2011 BY GARY D. NELSON, ALASKA RLS#7610-S.

7. PROPERTY LINE DEPICTION OF THIS MAP IS NOT CURRENT WITH PLATS TO DATE (7/21/2011).

8. TO CONVERT PROJECT STATE PLANE FEET TO MEASURED FEET MULTIPLY PROJECT DISTANCE BY .999987811

9. TO ROTATE PROJECT TO A TRUE NORTH BASIS; ROTATE PROJECT CLOCKWISE 1°29'20" AT POINT 616.

| POINT IDENTIFYER | NORTHING | EASTING | ELEV. | DESCRIPTION |
|---|---|---|---|---|
| 600 | 2251046.2030 | 1952669.7760 | 112.56 | CP-1 FND 3"ALMON BY 6094-S SET IN 1997 (SEE PLAT#2005-6) |
| 601 | 2247914.9780 | 1954419.7530 | 101.79 | 3"BRASS CAP, GPS-1, BY 10161-S SET IN 2004 (SEE PLAT#2005-6) |
| 602 | 2245867.7620 | 1954440.7260 | 115.38 | 3"BRASS CAP, GPS-2, BY 10161-S SET IN 2004 (SEE PLAT#2005-6 |
| 603 | 2253995.5440 | 1955984.5530 | 80.70 | 3"BLMBC_USS4421_C2 TR-A, SET IN 1968 |
| 604 | 2253954.0580 | 1955634.2350 | 79.87 | 3"BLMBC_USS4094_C1 L4 & USS4421, SET IN 1963 |
| 605 | 2253738.4120 | 1954860.3210 | 80.12 | 3"BLMBC_USS4421_WC CL ROW, SET IN 1968 |
| 606 | 2254041.5760 | 1954318.9970 | 85.35 | 3"BLMBC_USS4421_WC CTS BLK9 TR-A L2, SET IN 2009 |
| 607 | 2253849.3650 | 1953830.1830 | 84.29 | 2"BLM COPPERWELD, CTS L5/L6B BLK8 SET IN 2009 |
| 608 | 2253735.3780 | 1953545.8780 | 94.92 | 2.5"ALCAP ON 5/8" REBAR, ILLEGIBLE STAMPING (SEE PLAT#2011-4) |
| 609 | 2254115.2410 | 1953597.5120 | 96.60 | FOUND NAIL AT BOARDWALK CENTERLINE INTERSECTION |
| 610 | 2253980.4400 | 1953643.0180 | 97.24 | 3"BLMBC USS4421, CTS TR-A, BLK8, L3A, SET IN 2009 |
| 611 | 2253984.0960 | 1953629.1050 | 97.27 | FOUND NAIL AT BOARDWALK CENTERLINE INTERSECTION |
| 612 | 2253831.7480 | 1953757.7430 | 85.79 | 2"BLM COPPERWELD, USS4421, CTS, L4/L5, BLK 8, SET IN 2009 |
| 613 | 2253888.3190 | 1953989.6230 | 82.93 | 2"BLM COPPERWELD, USS4421, CTS, L7B/L1 BLK 8, SET IN 2009 |
| 614 | 2254062.4440 | 1953249.9090 | 91.37 | 2"BLM COPPERWELD, USS4421, CTS, L1/L5 BLK 6, SET IN 2009 |
| 615 | 2253851.0170 | 1953215.9650 | 95.66 | SET 12" SPIKE |
| 616 | 2254010.8380 | 1953046.6660 | 77.68 | 3"BLMBC USS4421, TR-A, C11, BLK 6, SET IN 1968 |
| 617 | 2254087.0490 | 1954664.2080 | 82.30 | 3"BLMBC USS4421, SET IN 1968, AT CENTERLINES OF THIRD AND B ST. |
| 618 | 2254565.8140 | 1952647.5700 | 82.74 | SET 5/8" REBAR AT TOP OF 3' HIGH HILL |
| 619 | 2254581. | 1952464. | N/A | FENCE CORNER FOR REFERENCE ONLY |
| 620 | 2254469. | 1952517.5 | N/A | POWER POLE FOR REFERENCE ONLY |
| 621 | 2254131.0570 | 1954664.3100 | 82.68 | 3"BLMBC USS4421, CTS WC_L1/L5 BLK2 SET IN 2009 |
| 622 | 2254155.4740 | 1954705.1910 | 80.33 | 2"BLM COPPERWELD USS 4421 CTS WC_L5/L4 BLK 2 SET IN 2009 |
| 623 | 2254004.8 | 1955080. | N/A | POWER POLE FOR REFERENCE ONLY |
| 624 | 2253803.8560 | 1953091.6020 | 92.57 | TBM_TOP END OF 24"CMP |
| 628 | 2251828.7740 | 1954098.9420 | 94.71 | FOUND 5/8" REBAR, BELIEVED TO BE ORIGINAL CORNER OF LOTS 4 & 5, BLK 18, PLAT 97-3 |
| 630 | 2251920.7510 | 1953789.9990 | 100.16 | FOUND 2"ALCAP SET BY 4125S IN 2006 PER PLAT 2008-5 |
| 631 | 2251966.9570 | 1953636.8610 | 101.56 | FOUND 5/8" REBAR |
| 633 | 2254072.1510 | 1955155.0590 | 78.53 | 3"BLMBC USS 4094 C2, L3, & C3, L4 SET IN 2005 |
| 634 | 2254023.8160 | 1954963.2110 | 77.93 | 3"BLMBC USS 4094 C2 L5 & C3 L6, MONUMENT FOUND UNDER 6" OF WATER |
| 635 | 2253847.6730 | 1954966.8190 | 78.28 | BLM 2"COPPERWELD USS4421 CTS SET IN 2009 |
| 636 | 2253915.3090 | 1954949.5250 | 78.00 | BLM 2"COPPERWELD USS4421 CTS SET IN 2009 |
| 637 | 2254969.5130 | 1952420.0170 | 81.60 | SET 10"SPIKE IN 3' HIGH HILL |
| 638 | 2254235.7720 | 1955114.0390 | 79.21 | 3"BLMBC USS4094 WC C4 L5 & C3 L3 SET IN 2005 |
| 639 | 2254769.4710 | 1950452.6420 | 80.08 | SET SPIKE IN 3' HIGH HILL |
| 640 | 2253745.9480 | 1953594.8120 | 92.64 | DISTURBED LOOKING 2"AL-CAP, STAMPING ILLEGIBLE |
| 641 | 2253084.8330 | 1953330.1940 | 98.65 | DISTURBED LOOKING 2"AL-CAP, STAMPING ILLEGIBLE |
| 643 | 2253485.9500 | 1955976.6900 | N/A | BASE OF 3"BLMBC MON. (LEANING), C2 TR-B USS4421 SET IN 1968 |
| 645 | 2253058.8570 | 1954109.8880 | 81.22 | 2.5"AL-CAP, STAMPED WCMC RPKA 9234-S 2009 (SEE PLAT#2011-4) |
| 647 | 2251564.0880 | 1954559.9400 | 91.21 | BASE OF A BENT 5/8" REBAR WITH 1.5"AL-CAP ILLEGIBLE STAMPING (SEE PLAT#2011-4) |
| 649 | 2251400.3100 | 1954510.0070 | 93.09 | 1.5"AL-CAP STAMPED 4489-S 1981 (PER PLAT 97-3) |
| 2318 | 2250832.6320 | 1954487.6490 | 85.51 | FOUND SPIKE & RED WHISKERS (BY OTHERS) |
| 2325 | 2250523.7090 | 1954448.8330 | 86.21 | FOUND SPIKE & RED WHISKERS (BY OTHERS) |
| 2513 | 2250563.3640 | 1954654.5330 | 89.28 | FOUND SPIKE & RED WHISKERS (BY OTHERS) |
| 2519 | 2250651.9190 | 1954585.8050 | 86.91 | FOUND SPIKE & RED WHISKERS (BY OTHERS) |

RECORD DRAWING CERTIFICATE
THESE DRAWINGS REFLECT RECORDED INFORMATION OBTAINED DURING CONSTRUCTION. INFORMATION PROVIDED HEREIN IS ACCURATE TO THE BEST OF MY KNOWLEDGE.
NAME DATE

SCALE: AS SHOWN
BAR IS ONE INCH ON ORIGINAL DRAWING
0 1"
IF NOT ONE INCH ON THIS SHEET, ADJUST SCALES ACCORDINGLY

CONSTRUCTION RECORD
FIELD BOOK
STAKING
FOREMAN
AS-BUILT
INSPECTOR

STATE OF ALASKA 49TH Gary D. Nelson LS 7610 9-5-11 PROFESSIONAL LAND SURVEYOR

# SURVEY CONTROL
CHEFORNAK, ALASKA

CE2 ENGINEERS, INC.
PO BOX 220549 ANCHORAGE, AK 99522 PH: 907-349-1019 FAX: 907-349-1015

| REVISION | BY | DATE |
|---|---|---|
| | | |

Project No. ____
Date ____
Designed ____ CM
Drawn ____ GN
Approved ____

Sheet No.
G2.1

G:\ACAD\CHEFORNAK\CYF1101 Sewage Lagoon\G2.1 SURVEY CONTROL.dwg, 11/6/2013 2:02:56 PM, cmerz, \\Ce2main\LANIER MP C2050/LD520C PCL 6

# RECORD OF BOREHOLE TP-1

SHEET 1 of 1

PROJECT: CE2 Chefornak Lagoon
PROJECT NUMBER: 113-95619
LOCATION: Chefornak, AK

CLIENT: CE2
DRILLING DATE: 4/1/2011
EQUIPMENT: Excavator- Hitachi EX 300

DATUM: WGS 84
ELEVATION: n/a
COORDS: 60.16167° N 164.29778° W

BORING METHOD: Bucket

| DEPTH (ft) | SOIL PROFILE – DESCRIPTION | USCS | ELEV. / DEPTH (ft) | SAMPLE NUMBER | TYPE | BLOWS PER FT | REC / ATT (inch) | UNCORRECTED BLOWS / FT | SALINITY (ppt) / WATER CONTENT (PERCENT) | NOTES TESTS WATER LEVELS GRAPHIC |
|---|---|---|---|---|---|---|---|---|---|---|
| 0 | 0.0 - 2.0 Frozen, light brown, fibrous PEAT, well bonded with approximately 40-50% visible ice by volume as individual ice crystals (PT Vx) | PT | | 1 | GS | | 6/6 | 1491 | | |
| | 2.0 - 3.0 Frozen, brown, ORGANIC SILT, well bonded with approximately 5-10% visible ice by volume as coatings on particles (OL, Vc) | OL | 2.0 | | | | | | | |
| | 3.0 - 8.0 Frozen, gray, SILT, well bonded with approximately 5-10% visible ice by volume, grading to poorly bonded with no visible ice, trace organic material (ML, Vc to Nf) | ML | 3.0 | 2 | GS | | 6/6 | 243 | | Backfilled with excavated materials |
| 5 | | | | 3 | GS | | 6/6 | | | |
| | 8.0 - 12.0 Dark gray to gray, SILT, low plasticity, trace organic material (ML) | ML | 8.0 | 4 | GS | | 6/6 | 57 | Gravel = 0%, Sand = 4%, P200 = 95.9% | |
| 10 | 12.0 - 15.0 Frozen, dark gray, SILT, poorly bonded friable (ML, Nf) | ML | 12.0 | 5 | GS | | 6/6 | | | |
| | | | | 6 | GS | | 6/6 | | | |
| 15 | Borehole completed at 15.0 ft. | | | | | | | | | |
| 20 | | | | | | | | | | |

Notes:

1) Test pit backfilled with excavated materials
2) No groundwater observed

DEPTH SCALE: 1 inch to 2.5 feet
DRILLING CONTRACTOR: CE2
DRILLER: Evan

LOGGED: J. Randazzo
CHECKED: D. Willman
CHECK DATE: 5/17/2011

Golder Associates

Figure 4

# RECORD OF BOREHOLE TP-2

SHEET 1 of 1

PROJECT: CE2 Chefornak Lagoon
PROJECT NUMBER: 113-95619
LOCATION: Chefornak, AK

CLIENT: CE2
DRILLING DATE: 4/1/2011
EQUIPMENT: Excavator- Hitachi EX 300

DATUM: WGS 84
ELEVATION: n/a
COORDS: 60.16253° N 164.29778° W

BORING METHOD: Bucket

| DEPTH (ft) | SOIL PROFILE – DESCRIPTION | USCS | ELEV. / DEPTH (ft) | SAMPLE NUMBER | TYPE | BLOWS PER FT | REC / ATT (inch) | UNCORRECTED BLOWS / FT | SALINITY (ppt) / WATER CONTENT (PERCENT) | NOTES TESTS WATER LEVELS GRAPHIC |
|---|---|---|---|---|---|---|---|---|---|---|
| 0 | 0.0 - 1.0 Frozen, light brown, fibrous PEAT, well bonded with approximately 40-50% visible ice by volume as individual ice crystals (PT, Vx) | PT | | | | | | | | |
| | 1.0 - 2.0 Frozen, brown, ORGANIC SILT, well bonded no excess ice (OL, Nbn) | OL | 1.0 | 1 | GS | | 6/6 | 1006 | | |
| | 2.0 - 13.0 Frozen, gray, SILT, well bonded to 9.5 feet, approximately 10-15% visible ice by volume as coatings on particles, some organic material (ML, Vc to Nf) | ML | 2.0 | 2 | GS | | 6/6 | 322 | | 1 inch PVC |
| 5 | | | | | | | | | | |
| | Poorly bonded at 9.5 feet | | | 3 | GS | | 6/6 | 64 | | |
| 10 | | | | | | | | | | |
| 15 | Borehole completed at 13.0 ft. | | | | | | | | | |
| 20 | | | | | | | | | | |

Notes:

1) Test pit backfilled with excavated materials
2) Closed-end 1 inch schedule 80 PVC installed to 13 feet, with 2 feet of stickup above grade
3) No groundwater observed

DEPTH SCALE: 1 inch to 2.5 feet
DRILLING CONTRACTOR: CE2
DRILLER: Evan

LOGGED: J. Randazzo
CHECKED: D. Willman
CHECK DATE: 5/17/2011

Golder Associates

Figure 5

RECORD DRAWING CERTIFICATE

THESE DRAWINGS REFLECT RECORDED INFORMATION OBTAINED DURING CONSTRUCTION. INFORMATION PROVIDED HEREIN IS ACCURATE TO THE BEST OF MY KNOWLEDGE.

NAME | DATE

SCALE: BAR IS ONE INCH ON ORIGINAL DRAWING 0 1" — IF NOT ONE INCH ON THIS SHEET, ADJUST SCALES ACCORDINGLY

CONSTRUCTION RECORD: FIELD BOOK | STAKING | FOREMAN | AS-BUILT | INSPECTOR

11-12-2013

STATE OF ALASKA 49TH Michael R. Eckman No.6252 REGISTERED PROFESSIONAL ENGINEER

FACULTATIVE LAGOON

TEST HOLE BORING LOGS

CHEFORNAK, ALASKA

CE2 ENGINEERS, INC.
PO BOX 232948 ANCHORAGE, AK 99523 PH: 907-349-1010 FAX: 907-349-1015

| REVISION | BY | DATE |
|---|---|---|
| | | |

Project No. ____ Date OCT. 2011 Designed MRE Drawn CM Approved MRE

Sheet No. G3.1

G:\ACAD\CHEFORNAK\CYF1101 Sewage Lagoon\G3.1 TO G3.2.dwg, 11/6/2013 2:02:31 PM, cmerz, \\Ce2main\LANIER MP C2050/LD520C PCL 6

CE2 CHEFORNAK LAGOON.GPJ LIBRARY-ANC(7-13-11).GLB [ANC BOREHOLE] DFreese 7/19/11

# RECORD OF BOREHOLE TP-3

SHEET 1 of 1

PROJECT: CE2 Chefornak Lagoon
PROJECT NUMBER: 113-95619
LOCATION: Chefornak, AK

CLIENT: CE2
DRILLING DATE: 4/2/2011
EQUIPMENT: Excavator- Hitachi EX 300

DATUM: WGS 84
ELEVATION: n/a
COORDS: 60.16222° N 164.29689° W

| DEPTH (ft) | BORING METHOD | DESCRIPTION | ICE BOND | USCS | GRAPHIC LOG | ELEV. DEPTH (ft) | NUMBER | TYPE | BLOWS PER FT | REC ATT (inch) | UNCORRECTED BLOWS / FT (10 20 30 40) | SALINITY (ppt) △ WATER CONTENT (PERCENT) $W_P$ ⊢ $W_N$ ⊣ $W_L$ (10 20 30 40) | NOTES TESTS WATER LEVELS GRAPHIC |
|---|---|---|---|---|---|---|---|---|---|---|---|---|---|
| 0 | Bucket | 0.0 - 1.0 Frozen, light brown, fibrous PEAT, well bonded with approximately 40-50% visible ice by volume as individual ice crystals (PT, Vx) | | PT | | | | | | | | | |
| | | 1.0 - 3.0 Frozen, brown, ORGANIC SILT, well bonded with approximately 5-10% visible ice by volume as coatings on particles (OL, Vc) | | OL | | 1.0 | 1 | GS | | 6/6 | | 648 | |
| | | 3.0 - 6.0 Dark gray, SILT, well bonded becoming friable below 5 feet, approximately 10% visible ice by volume (ML, Vc to Nbn) | | ML | | 3.0 | 2 | GS | | 6/6 | | 64 | |
| 5 | | 6.0 - 8.0 Moist, dark gray, elastic SILT, medium plasticity (MH) | | MH | | 6.0 | 3 | GS | | 6/6 | △ | 300 | 1 inch PVC |
| | | 8.0 - 16.0 Gray, SILT, trace sand layers observed below 15 feet (ML) | | ML | | 8.0 | 4 | GS | | 6/6 | | ○ | Gravel = 0%, Sand = 6%, WD P200 = 93.7% |
| 10 | | | | | | | | | | | | | |
| 15 | | | | | | | 5 | GS | | 6/6 | △ | ○ | |
| | | Borehole completed at 16.0 ft. | | | | | | | | | | | |
| 20 | | | | | | | | | | | | | |

Notes:

1) Test pit backfilled with excavated materials
2) Groundwater seepage observed at 10 feet during excavation
3) Closed-end 1 inch schedule 80 PVC installed to 15 feet, with 5 feet of stick up above grade

Golder Associates

DEPTH SCALE: 1 inch to 2.5 feet
DRILLING CONTRACTOR: CE2
DRILLER: Evan

LOGGED: J. Randazzo
CHECKED: D. Willman
CHECK DATE: 5/17/2011

Figure 6

# RECORD OF BOREHOLE TP-4

SHEET 1 of 1

PROJECT: CE2 Chefornak Lagoon
PROJECT NUMBER: 113-95619
LOCATION: Chefornak, AK

CLIENT: CE2
DRILLING DATE: 4/2/2011
EQUIPMENT: Excavator- Hitachi EX 300

DATUM: WGS 84
ELEVATION: n/a
COORDS: 60.16314° N 164.29500° W

| DEPTH (ft) | BORING METHOD | DESCRIPTION | ICE BOND | USCS | GRAPHIC LOG | ELEV. DEPTH (ft) | NUMBER | TYPE | BLOWS PER FT | REC ATT (inch) | UNCORRECTED BLOWS / FT (10 20 30 40) | SALINITY (ppt) △ WATER CONTENT (PERCENT) $W_P$ ⊢ $W_N$ ⊣ $W_L$ (10 20 30 40) | NOTES TESTS WATER LEVELS GRAPHIC |
|---|---|---|---|---|---|---|---|---|---|---|---|---|---|
| 0 | Bucket | 0.0 - 1.0 Frozen, brown, fibrous PEAT, well bonded no excess ice (PT, Nbn) | | PT | | | | | | | | | |
| | | 1.0 - 2.0 Frozen, brown, ORGANIC SILT, well bonded no excess ice (OL, Nbn) | | OL | | 1.0 | 1 | GS | | 6/6 | | 222 | |
| | | 2.0 - 5.0 Frozen, gray, SILT, well bonded to 4 feet, poorly bonded 4-5 feet, no visible ice, trace organic material (ML, Nbn) | | ML | | 2.0 | 2 | GS | | 6/6 | △ | 73 | Backfilled with excavated materials |
| 5 | | 5.0 - 7.0 Moist, black, ORGANIC SILT, mixed with peat (OL) | | OL | | 5.0 | 3 | GS | | 6/6 | | 74 | |
| | | 7.0 - 9.0 Moist, gray, SILT (ML) | | ML | | 7.0 | | | | | | | |
| 10 | | 9.0 - 18.0 Gray, SILT, few fine sand grading to sandy SILT, sand is fine (ML) | | ML | | 9.0 | 4 | GS | | 6/6 | | ○ | Gravel = 0%, Sand = 10%, P200 = 89.7%, MA |
| 15 | | | | | | | 5 | GS | | 6/6 | △ | ○ | Gravel = 0%, Sand = 33%, P200 = 66.7% |
| | | Borehole completed at 18.0 ft. | | | | | | | | | | | |
| 20 | | | | | | | | | | | | | |

Notes:

1) Test pit backfilled with excavated materials
2) No groundwater observed

Golder Associates

DEPTH SCALE: 1 inch to 2.5 feet
DRILLING CONTRACTOR: CE2
DRILLER: Evan

LOGGED: J. Randazzo
CHECKED: D. Willman
CHECK DATE: 5/17/2011

Figure 7

RECORD DRAWING CERTIFICATE

THESE DRAWINGS REFLECT RECORDED INFORMATION OBTAINED DURING CONSTRUCTION. INFORMATION PROVIDED HEREIN IS ACCURATE TO THE BEST OF MY KNOWLEDGE.

NAME | DATE

SCALE:

BAR IS ONE INCH ON ORIGINAL DRAWING
0 1"
IF NOT ONE INCH ON THIS SHEET, ADJUST SCALES ACCORDINGLY

CONSTRUCTION RECORD
FIELD BOOK
STAKING
FOREMAN
AS-BUILT
INSPECTOR

11-12-2013

STATE OF ALASKA 49TH Michael R. Erdman No.6262 REGISTERED PROFESSIONAL ENGINEER

FACULTATIVE LAGOON

TEST HOLE BORING LOGS

CHEFORNAK, ALASKA

CE2 ENGINEERS, INC.
PO BOX 232048 ANCHORAGE, AK 99523 PH: 907-349-1010 FAX: 907-349-1015

| REVISION | BY | DATE |
|---|---|---|
| | | |

Project No. ____
Date OCT. 2011
Designed MRE
Drawn CM
Approved MRE

Sheet No.
G3.2

G:\ACAD\CHEFORNAK\CYF1101 Sewage Lagoon\G3.1 TO G3.2.dwg, 11/6/2013 2:02:20 PM, cmerz, \\Ce2main\LANIER MP C2050/LD520C PCL 6

CE2 CHEFORNAK LAGOON.GPJ LIBRARY-ANC(7-13-11).GLB [ANC BOREHOLE] DFreese 7/19/11

# RECORD OF BOREHOLE TP-5

SHEET 1 of 1

PROJECT: CE2 Chefornak Lagoon
PROJECT NUMBER: 113-95619
LOCATION: Chefornak, AK

CLIENT: CE2
DRILLING DATE: 4/2/2011
EQUIPMENT: Excavator- Hitachi EX 300

DATUM: WGS 84
ELEVATION: n/a
COORDS: 60.16231° N 164.29428° W

| DEPTH (ft) | BORING METHOD | DESCRIPTION | ICE BOND | USCS | GRAPHIC LOG | ELEV. DEPTH (ft) | SAMPLE NUMBER | TYPE | BLOWS PER FT | REC ATT (inch) | UNCORRECTED BLOWS / FT (10 20 30 40) | SALINITY (ppt) △ / WATER CONTENT (PERCENT) $W_p$ $W_o$ $W_l$ (10 20 30 40) | NOTES TESTS WATER LEVELS GRAPHIC |
|---|---|---|---|---|---|---|---|---|---|---|---|---|---|
| 0 | Bucket | 0.0 - 1.0 Frozen, brown, fibrous PEAT, well bonded no excess ice (PT, Nbn) | | PT | | | | | | | | | |
| | | 1.0 - 2.0 Frozen, brown, ORGANIC SILT, well bonded no excess ice (OL, Nbn) | | OL | | 1.0 | 1 | GS | | 6/6 | △ | 114 | |
| | | 2.0 - 9.0 Frozen, gray to dark gray, SILT, well bonded, approximately 5-10% visible ice by volume, trace organic material (ML, Vc to Nf) | | ML | | 2.0 | | | | | | | |
| 5 | | Poorly bonded at 7 feet | | | | | 2 | GS | | 6/6 | △ | 71 | Gravel = 0%, Sand = 10%, P200 = 90.0% |
| | | 9.0 - 18.0 Wet, gray to dark gray, sandy SILT, fine-grained sand, sand content increasing with depth (ML) | | ML | | 9.0 | | | | | | | 1 inch PVC |
| 10 | | | | | | | 3 | GS | | 6/6 | | | |
| 15 | | | | | | | 4 | GS | | 6/6 | | | Gravel = 0%, Sand = 33%, P200 = 66.9% |
| | | Borehole completed at 18.0 ft. | | | | | | | | | | | |
| 20 | | | | | | | | | | | | | |

Notes:

1) Test pit backfilled with excavated materials
2) Closed-end 1 inch schedule 80 PVC installed to 18 feet, with 2 feet of stickup above grade
3) No groundwater observed

Golder Associates

DEPTH SCALE: 1 inch to 2.5 feet
DRILLING CONTRACTOR: CE2
DRILLER: Evan

LOGGED: J. Randazzo
CHECKED: D. Willman
CHECK DATE: 5/17/2011

Figure 8

CE2 CHEFORNAK LAGOON.GPJ LIBRARY-ANC(7-13-11).GLB [ANC BOREHOLE] DFreese 7/19/11

# RECORD OF BOREHOLE TP-6

SHEET 1 of 1

PROJECT: CE2 Chefornak Lagoon
PROJECT NUMBER: 113-95619
LOCATION: Chefornak, AK

CLIENT: CE2
DRILLING DATE: 4/2/2011
EQUIPMENT: Excavator- Hitachi EX 300

DATUM: WGS 84
ELEVATION: n/a
COORDS: 60.16136° N 164.29281° W

| DEPTH (ft) | BORING METHOD | DESCRIPTION | ICE BOND | USCS | GRAPHIC LOG | ELEV. DEPTH (ft) | SAMPLE NUMBER | TYPE | BLOWS PER FT | REC ATT (inch) | UNCORRECTED BLOWS / FT (10 20 30 40) | SALINITY (ppt) △ / WATER CONTENT (PERCENT) $W_p$ $W_o$ $W_l$ (10 20 30 40) | NOTES TESTS WATER LEVELS GRAPHIC |
|---|---|---|---|---|---|---|---|---|---|---|---|---|---|
| 0 | Bucket | 0.0 - 0.5 Frozen, black, fibrous PEAT, well bonded no excess ice (PT, Nbn) | | PT | | | | | | | | | |
| | | 0.5 - 1.5 Frozen, black, ORGANIC SILT, well bonded no excess ice (OL, Nbn) | | OL | | 0.5 | | | | | | | Backfilled with excavated materials |
| | | 1.5 - 3.0 Wet, black, ORGANIC SILT (OL) | | OL | | 1.5 | 1 | GS | | 6/6 | △ | 110 | |
| | | 3.0 - 5.0 Wet, black, SILT, trace sand (ML) | | ML | | 3.0 | 2 | GS | | 6/6 | △ | 18 | 3 ft WD |
| 5 | | Borehole completed at 5.0 ft. | | | | | | | | | | | |
| 10 | | | | | | | | | | | | | |
| 15 | | | | | | | | | | | | | |
| 20 | | | | | | | | | | | | | |

Notes:

1) Test pit backfilled with excavated materials
2) Test pit excavated in potential drainage channel
3) Groundwater observed at 3 feet while excavating

Golder Associates

DEPTH SCALE: 1 inch to 2.5 feet
DRILLING CONTRACTOR: CE2
DRILLER: Evan

LOGGED: J. Randazzo
CHECKED: D. Willman
CHECK DATE: 5/17/2011

Figure 9

CE2 CHEFORNAK LAGOON.GPJ LIBRARY-ANC(7-13-11).GLB [ANC BOREHOLE] DFreese 7/19/11

RECORD DRAWING CERTIFICATE
THESE DRAWINGS REFLECT RECORDED INFORMATION OBTAINED DURING CONSTRUCTION. INFORMATION PROVIDED HEREIN IS ACCURATE TO THE BEST OF MY KNOWLEDGE.
NAME DATE

SCALE:
BAR IS ONE INCH ON ORIGINAL DRAWING
0 1"
IF NOT ONE INCH ON THIS SHEET, ADJUST SCALES ACCORDINGLY

CONSTRUCTION RECORD
FIELD BOOK
STAKING
FOREMAN
AS-BUILT
INSPECTOR

11-12-2013

STATE OF ALASKA 49TH Michael R. Erdman No.6252 REGISTERED PROFESSIONAL ENGINEER

FACULTATIVE LAGOON

TEST HOLE BORING LOGS

CHEFORNAK, ALASKA

CE2 ENGINEERS, INC.
PO BOX 223948 ANCHORAGE, AK 99503 PH: 907-349-1010 FAX: 907-349-1015

| REVISION | BY | DATE |
|---|---|---|
| | | |

Project No.
Date OCT 2011
Designed MRE
Drawn CM
Approved MRE

Sheet No.
G3.3

G:\ACAD\CHEFORNAK\CYF1101 Sewage Lagoon\G3.1 TO G3.2.dwg, 11/6/2013 2:02:10 PM, cmerz, \\Ce2main\LANIER MP C2050/LD520C PCL 6

# RECORD OF BOREHOLE TP-7

SHEET 1 of 1

PROJECT: CE2 Chefornak Lagoon
PROJECT NUMBER: 113-95619
LOCATION: Chefornak, AK

CLIENT: CE2
DRILLING DATE: 4/2/2011
EQUIPMENT: Excavator- Hitachi EX 300

DATUM: WGS 84
ELEVATION: n/a
COORDS: 60.16069° N 164.29033° W

BORING METHOD: Bucket

| DEPTH (ft) | DESCRIPTION | USCS | DEPTH (ft) | NUMBER | TYPE | BLOWS PER FT | REC ATT (inch) | UNCORRECTED BLOWS / FT (10 20 30 40) | SALINITY (ppt) △ / WATER CONTENT (PERCENT) $w_p$ ⊢—$w_n$—⊣ $w_l$ (10 20 30 40) | NOTES TESTS WATER LEVELS GRAPHIC |
|---|---|---|---|---|---|---|---|---|---|---|
| 0 | 0.0 - 1.5<br>Frozen, brown, fibrous PEAT, well bonded no excess ice<br>(PT, Nbn) | PT | | | | | | | | |
| | | | | 1 | GS | | 6/6 | | 93 | |
| | 1.5 - 10.0<br>Frozen, gray, SILT, well bonded, no visible ice, trace fibrous organic material<br>(ML, Nbn to Nf) | ML | 1.5 | | | | | | | |
| | | | | 2 | GS | | 6/6 | △ | 80 | |
| 5 | | | | | | | | | | 1 inch PVC |
| | Poorly bonded at 8 feet, trace sand | | | 3 | GS | | 6/6 | △ | 85 | |
| 10 | Borehole completed at 10.0 ft. | | | | | | | | | |
| 15 | | | | | | | | | | |
| 20 | | | | | | | | | | |

Notes:

1) Test pit backfilled with excavated materials
2) Closed-end 1 inch schedule 80 PVC installed to 10 feet, with 1.5 feet of stickup above grade
3) No groundwater observed

Golder Associates

DEPTH SCALE: 1 inch to 2.5 feet
DRILLING CONTRACTOR: CE2
DRILLER: Evan

LOGGED: J. Randazzo
CHECKED: D. Willman
CHECK DATE: 5/17/2011

Figure 10

# RECORD OF BOREHOLE TP-8

SHEET 1 of 1

PROJECT: CE2 Chefornak Lagoon
PROJECT NUMBER: 113-95619
LOCATION: Chefornak, AK

CLIENT: CE2
DRILLING DATE: 4/3/2011
EQUIPMENT: Excavator- Hitachi EX 300

DATUM: WGS 84
ELEVATION: n/a
COORDS: 60.16025° N 164.28892° W

BORING METHOD: Bucket

| DEPTH (ft) | DESCRIPTION | USCS | DEPTH (ft) | NUMBER | TYPE | BLOWS PER FT | REC ATT (inch) | UNCORRECTED BLOWS / FT (10 20 30 40) | SALINITY (ppt) △ / WATER CONTENT (PERCENT) $w_p$ ⊢—$w_n$—⊣ $w_l$ (10 20 30 40) | NOTES TESTS WATER LEVELS GRAPHIC |
|---|---|---|---|---|---|---|---|---|---|---|
| 0 | 0.0 - 0.5<br>Frozen, brown, fibrous PEAT, well bonded no excess ice<br>(PT, Nbn) | PT | 0.5 | | | | | | | |
| | 0.5 - 1.5<br>Frozen, brown, ORGANIC SILT, well bonded with approximately 5% visible ice by volume as coatings on particles<br>(OL, Vc) | OL | 1.5 | 1 | GS | | 6/6 | | 18 | |
| | 1.5 - 3.5<br>Frozen, gray, SILT, trace sand, well bonded with approximately 5-10% visible ice by volume as coatings on particles<br>(ML, Vc) | ML | | 2 | GS | | 6/6 | △ | 65 | |
| | 3.5 - 5.0<br>Frozen, dark gray, ORGANIC SILT to SILT with organics, interbedded fibrous peat, poorly bonded with no visible ice<br>(OL to ML, Nf) | OL | 3.5 | | | | | | | |
| 5 | 5.0 - 7.0<br>Moist, black, SILT, trace to few fine-grained sand, nonplastic<br>(ML) | ML | 5.0 | 3 | GS | | 6/6 | | 10 | |
| | 7.0 - 15.5<br>Moist, gray, SILT, low plasticity, trace sand<br>(ML) | ML | 7.0 | 4 | GS | | 6/6 | | | Gravel = 0%, Sand = 11%, P200 = 88.6%, MA |
| | | | | | | | | | | 1 inch PVC |
| 10 | | | | 5 | GS | | 6/6 | △ | H | |
| 15 | Borehole completed at 15.5 ft. | | | | | | | | | |
| 20 | | | | | | | | | | |

Notes:

1) Test pit backfilled with excavated materials
2) Closed-end 1 inch schedule 80 PVC installed to 15.5 feet, with 4.5 feet of stickup above grade
3) No groundwater observed

Golder Associates

DEPTH SCALE: 1 inch to 2.5 feet
DRILLING CONTRACTOR: CE2
DRILLER: Evan

LOGGED: J. Randazzo
CHECKED: D. Willman
CHECK DATE: 5/17/2011

Figure 11

RECORD DRAWING CERTIFICATE
THESE DRAWINGS REFLECT RECORDED INFORMATION OBTAINED DURING CONSTRUCTION. INFORMATION PROVIDED HEREIN IS ACCURATE TO THE BEST OF MY KNOWLEDGE.
NAME
DATE

SCALE:
BAR IS ONE INCH ON ORIGINAL DRAWING
IF NOT ONE INCH ON THIS SHEET, ADJUST SCALES ACCORDINGLY

CONSTRUCTION RECORD
FIELD BOOK
STAKING
FOREMAN
AS-BUILT
INSPECTOR

11-12-2013

STATE OF ALASKA 49TH REGISTERED PROFESSIONAL ENGINEER Michael R. Erdman No.8262

FACULTATIVE LAGOON
TEST HOLE BORING LOGS
CHEFORNAK, ALASKA

CE2 ENGINEERS, INC.
PO BOX 223948 ANCHORAGE, AK 99523 PH: 907-349-1010 FAX: 907-349-1015

| REVISION | BY | DATE |
|---|---|---|

Project No. ____ Date OCT. 2011
Designed MRE
Drawn CM
Approved MRE

Sheet No. G3.4

G:\ACAD\CHEFORNAK\CYF1101 Sewage Lagoon\G3.1 TO G3.2.dwg, 11/6/2013 2:02:00 PM, cmerz, \\Ce2main\LANIER MP C2050/LD520C PCL 6

CE2 CHEFORNAK LAGOON.GPJ LIBRARY-ANC(7-13-11).GLB [ANC BOREHOLE] DFrease 7/19/11

**Mid Oct - End May**

**WINTER STORAGE**

Cell 1 shall be kept at "full" working depth (approx. 10') at all times. Cell 2 shall be emptied prior to freezing weather and allowed to fill during this period.

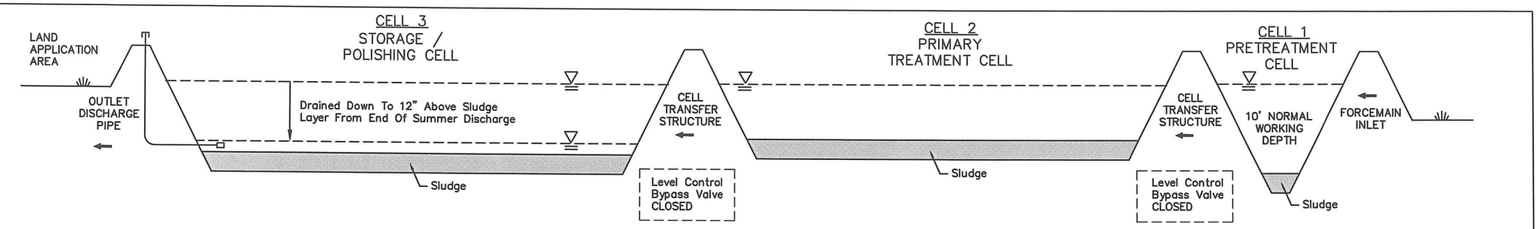


**Late May - Early June**

**SPRING MAINTENANCE**

Remove debris. Cut and remove brush within ten feet from perimeter fence and within enclosed area.

Inspect and repair fence, dikes, control structures, other facilities. Exercise valves. Ensure control structures, valves, and piping are ice–free.

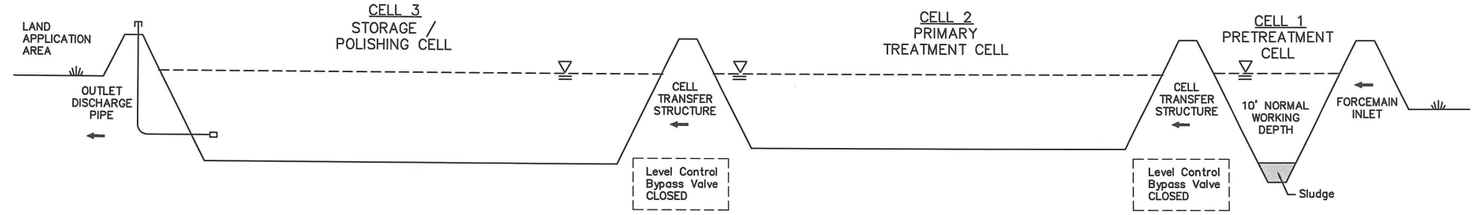


**Early June**

**SPRING DISCHARGE**

After Cell 2 has been ice free for a minimum of three weeks, begin discharging Cell 2 (through the Outlet Control Structure) to the Land Application Area. Adjust the outgoing valve to obtain approximately 250 GPM discharge flow rate. Close drain valves with 12–inches of water remaining.

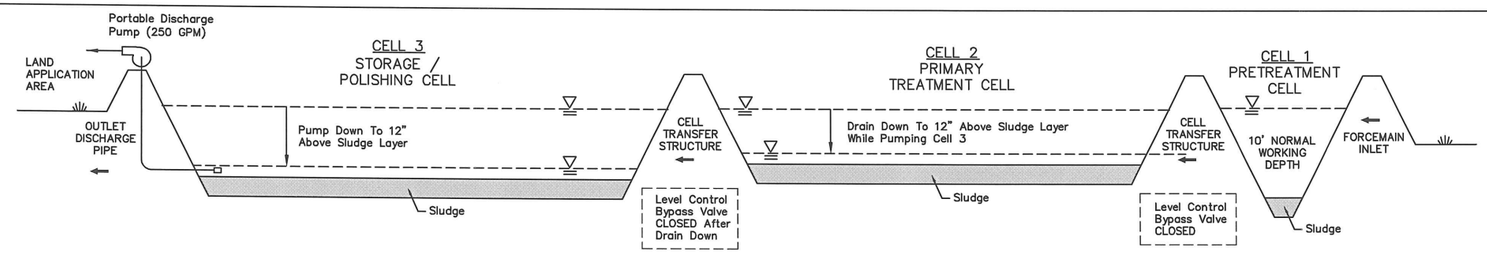


**June - mid-Oct.**

**Cell 2 SUMMER Fill**

Allow Cell 2 to fill.

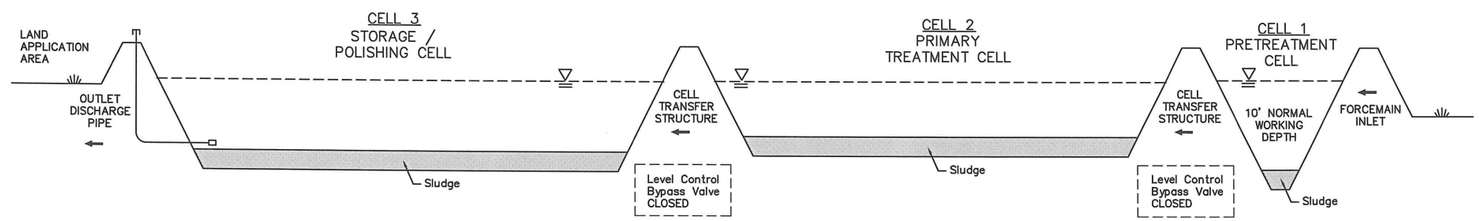


**Mid October**

**END-OF-SUMMER DISCHARGE**

Begin discharge of Cell 2 through the outlet control structure approximately two–weeks prior to the start of the "Freezing Season" during normal wet Fall weather. Adjust the outgoing valve to obtain approximately 350 GPM with 12–inches of water remaining.

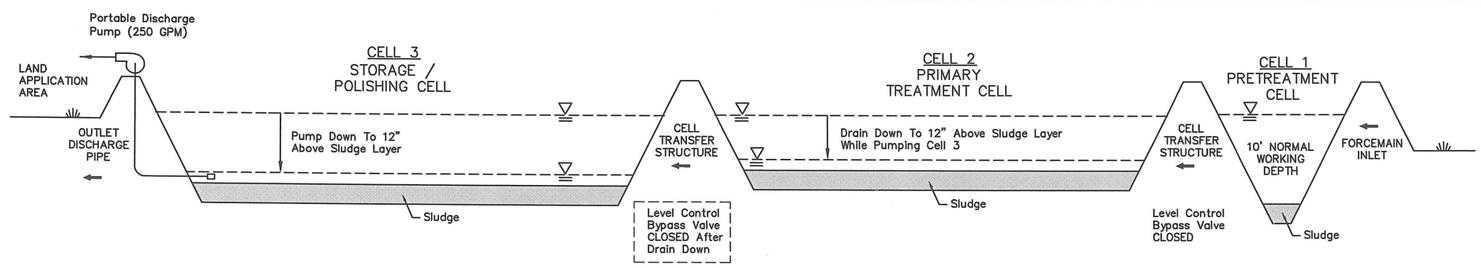


1 / G4.0 **WASTEWATER LAGOON OPERATING PLAN**

N.T.S.

RECORD DRAWING CERTIFICATE

THESE DRAWINGS REFLECT RECORDED INFORMATION OBTAINED DURING CONSTRUCTION. INFORMATION PROVIDED HEREIN IS ACCURATE TO THE BEST OF MY KNOWLEDGE.

NAME DATE

SCALE: AS SHOWN

BAR IS ONE INCH ON ORIGINAL DRAWING 0 1"

IF NOT ONE INCH ON THIS SHEET, ADJUST SCALES ACCORDINGLY

CONSTRUCTION RECORD

FIELD BOOK

STAKING

FOREMAN

AS-BUILT

INSPECTOR

11-12-2013

STATE OF ALASKA 49TH Michael R. Erdman No.6262 REGISTERED PROFESSIONAL ENGINEER

FACULTATIVE LAGOON

LAGOON OPERATING PLAN

CHEFORNAK, ALASKA

CE2 ENGINEERS, INC.

PO BOX 222946 ANCHORAGE, AK 99522 PH: 907-349-1010 FAX: 907-349-1015

| REVISION | BY | DATE |
|---|---|---|
| | | |

Project No. ____ Date OCT 2011 Designed MRE Drawn CM Approved MRE

Sheet No. G4.0

G:\ACAD\CHEFORNAK\CYF1101 Sewage Lagoon\G4.0 Operating Plan.dwg, 11/12/2013 1:22:55 PM, cmerz, \\Ce2main\LANIER MP C2050/LD520C PCL 6

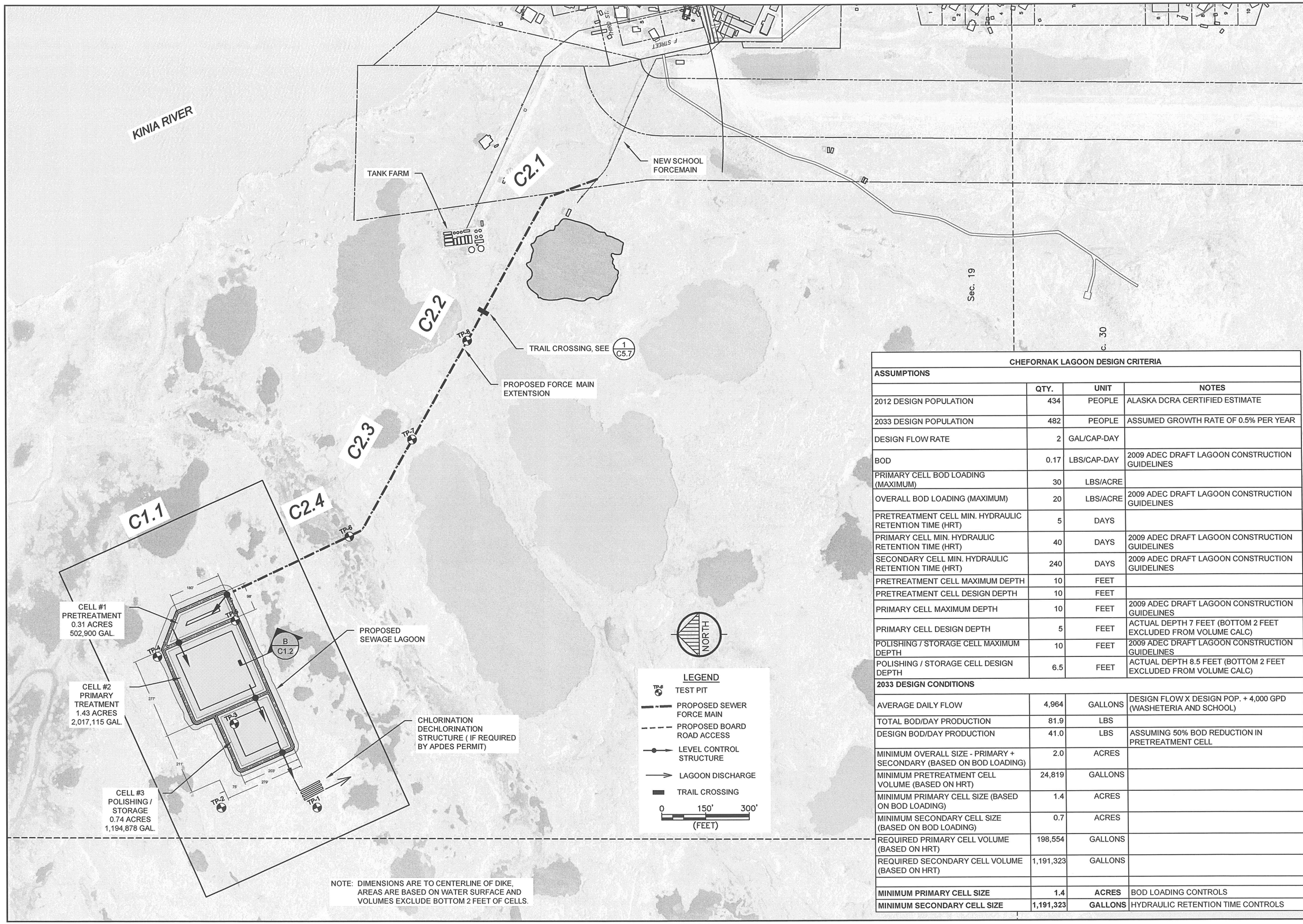


NOTE: DIMENSIONS ARE TO CENTERLINE OF DIKE, AREAS ARE BASED ON WATER SURFACE AND VOLUMES EXCLUDE BOTTOM 2 FEET OF CELLS.

| CHEFORNAK LAGOON DESIGN CRITERIA | | | |
|---|---|---|---|
| **ASSUMPTIONS** | | | |
| | QTY. | UNIT | NOTES |
| 2012 DESIGN POPULATION | 434 | PEOPLE | ALASKA DCRA CERTIFIED ESTIMATE |
| 2033 DESIGN POPULATION | 482 | PEOPLE | ASSUMED GROWTH RATE OF 0.5% PER YEAR |
| DESIGN FLOW RATE | 2 | GAL/CAP-DAY | |
| BOD | 0.17 | LBS/CAP-DAY | 2009 ADEC DRAFT LAGOON CONSTRUCTION GUIDELINES |
| PRIMARY CELL BOD LOADING (MAXIMUM) | 30 | LBS/ACRE | |
| OVERALL BOD LOADING (MAXIMUM) | 20 | LBS/ACRE | 2009 ADEC DRAFT LAGOON CONSTRUCTION GUIDELINES |
| PRETREATMENT CELL MIN. HYDRAULIC RETENTION TIME (HRT) | 5 | DAYS | |
| PRIMARY CELL MIN. HYDRAULIC RETENTION TIME (HRT) | 40 | DAYS | 2009 ADEC DRAFT LAGOON CONSTRUCTION GUIDELINES |
| SECONDARY CELL MIN. HYDRAULIC RETENTION TIME (HRT) | 240 | DAYS | 2009 ADEC DRAFT LAGOON CONSTRUCTION GUIDELINES |
| PRETREATMENT CELL MAXIMUM DEPTH | 10 | FEET | |
| PRETREATMENT CELL DESIGN DEPTH | 10 | FEET | |
| PRIMARY CELL MAXIMUM DEPTH | 10 | FEET | 2009 ADEC DRAFT LAGOON CONSTRUCTION GUIDELINES |
| PRIMARY CELL DESIGN DEPTH | 5 | FEET | ACTUAL DEPTH 7 FEET (BOTTOM 2 FEET EXCLUDED FROM VOLUME CALC) |
| POLISHING / STORAGE CELL MAXIMUM DEPTH | 10 | FEET | 2009 ADEC DRAFT LAGOON CONSTRUCTION GUIDELINES |
| POLISHING / STORAGE CELL DESIGN DEPTH | 6.5 | FEET | ACTUAL DEPTH 8.5 FEET (BOTTOM 2 FEET EXCLUDED FROM VOLUME CALC) |
| **2033 DESIGN CONDITIONS** | | | |
| AVERAGE DAILY FLOW | 4,964 | GALLONS | DESIGN FLOW X DESIGN POP. + 4,000 GPD (WASHETERIA AND SCHOOL) |
| TOTAL BOD/DAY PRODUCTION | 81.9 | LBS | |
| DESIGN BOD/DAY PRODUCTION | 41.0 | LBS | ASSUMING 50% BOD REDUCTION IN PRETREATMENT CELL |
| MINIMUM OVERALL SIZE - PRIMARY + SECONDARY (BASED ON BOD LOADING) | 2.0 | ACRES | |
| MINIMUM PRETREATMENT CELL VOLUME (BASED ON HRT) | 24,819 | GALLONS | |
| MINIMUM PRIMARY CELL SIZE (BASED ON BOD LOADING) | 1.4 | ACRES | |
| MINIMUM SECONDARY CELL SIZE (BASED ON BOD LOADING) | 0.7 | ACRES | |
| REQUIRED PRIMARY CELL VOLUME (BASED ON HRT) | 198,554 | GALLONS | |
| REQUIRED SECONDARY CELL VOLUME (BASED ON HRT) | 1,191,323 | GALLONS | |
| | | | |
| **MINIMUM PRIMARY CELL SIZE** | **1.4** | **ACRES** | BOD LOADING CONTROLS |
| **MINIMUM SECONDARY CELL SIZE** | **1,191,323** | **GALLONS** | HYDRAULIC RETENTION TIME CONTROLS |

RECORD DRAWING CERTIFICATE

THESE DRAWINGS REFLECT RECORDED INFORMATION OBTAINED DURING CONSTRUCTION. INFORMATION PROVIDED HEREIN IS ACCURATE TO THE BEST OF MY KNOWLEDGE.

NAME DATE

SCALE: AS SHOWN

BAR IS ONE INCH ON ORIGINAL DRAWING 0 1"

IF NOT ONE INCH ON THIS SHEET, ADJUST SCALES ACCORDINGLY

CONSTRUCTION RECORD

FIELD BOOK

STAKING

FOREMAN

AS-BUILT

INSPECTOR

11-12-2013

STATE OF ALASKA 49TH Michael R. Eshman No. 8252 REGISTERED PROFESSIONAL ENGINEER

FACULTATIVE LAGOON

KEY MAP

CHEFORNAK, ALASKA

CE2 ENGINEERS, INC.

PO BOX 223948 ANCHORAGE, AK 99523 PH: 907-349-1010 FAX: 907-349-1015

| REVISION | BY | DATE |
|---|---|---|
| | | |

Project No. ____ Date OCT. 2011 Designed MRE Drawn CM Approved MRE

Sheet No. C1.0

G:\ACAD\CHEFORNAK\CYF1101 Sewage Lagoon\C1.0 KEY MAP.dwg, 11/12/2013 2:20:20 PM, cmerz, \\Ce2main\LANIER MP C2050/LD520C PCL 6

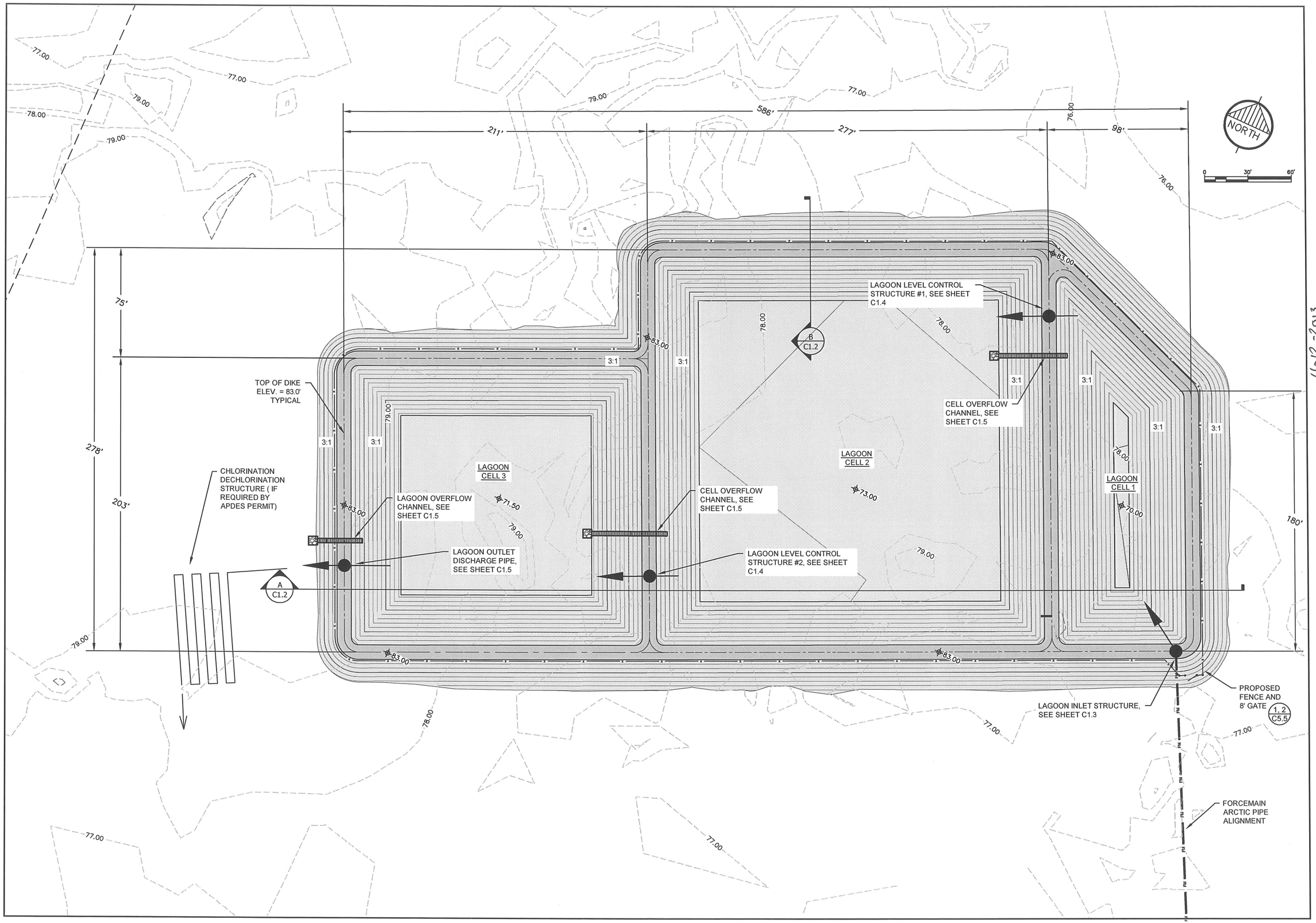


G:\ACAD\CHEFORNAK\CYF1101 Sewage Lagoon\C1.1 LAGOON SITE PLAN 2013.dwg, 11/12/2013 2:03:11 PM, cmerz, \\Ce2main\LANIER MP C2050//LD520C PCL 6

RECORD DRAWING CERTIFICATE

THESE DRAWINGS REFLECT RECORDED INFORMATION OBTAINED DURING CONSTRUCTION. INFORMATION PROVIDED HEREIN IS ACCURATE TO THE BEST OF MY KNOWLEDGE.

NAME DATE

SCALE: AS SHOWN

BAR TO ONE INCH TO ORIGINAL DRAWING 0 1"

IF NOT ONE INCH ON THIS SHEET, ADJUST SCALES ACCORDINGLY

CONSTRUCTION RECORD

FIELD BOOK

STAKING

FOREMAN

AS-BUILT

INSPECTOR

11-12-2013

STATE OF ALASKA 49TH MICHAEL R. ERDMAN REGISTERED PROFESSIONAL ENGINEER Michael R. Erdman No.6252

FACULTATIVE LAGOON

LAGOON SITE PLAN

CHEFORNAK, ALASKA

CE2 ENGINEERS, INC.

PO BOX 223948 ANCHORAGE, AK 99523 PH: 907-349-1010 FAX: 907-349-1015

| REVISION | BY | DATE |
|---|---|---|
| | | |

Project No. ____

Date OCT. 2011

Designed MRE

Drawn CM

Approved MRE

Sheet No.

C1.1

A LAGOON CROSS-SECTION

1:6 VERTICAL EXAGGERATION

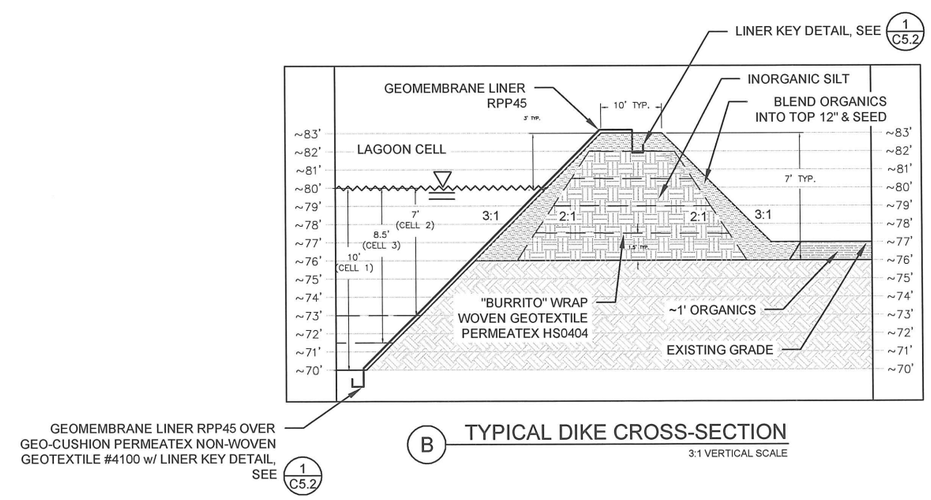


B TYPICAL DIKE CROSS-SECTION

3:1 VERTICAL SCALE

RECORD DRAWING CERTIFICATE

THESE DRAWINGS REFLECT RECORDED INFORMATION OBTAINED DURING CONSTRUCTION. INFORMATION PROVIDED HEREIN IS ACCURATE TO THE BEST OF MY KNOWLEDGE.

NAME DATE

SCALE: AS SHOWN

BAR IS ONE INCH ON ORIGINAL DRAWING 0 1"

IF NOT ONE INCH ON THIS SHEET, ADJUST SCALES ACCORDINGLY

CONSTRUCTION RECORD

FIELD BOOK

STAKING

FOREMAN

AS-BUILT

INSPECTOR

11-12-2013

STATE OF ALASKA 49TH REGISTERED PROFESSIONAL ENGINEER Michael R. Erdman No.6262

FACULTATIVE LAGOON

LAGOON CROSS SECTIONS

CHEFORNAK, ALASKA

CE2 ENGINEERS, INC.

PO BOX 232048 ANCHORAGE, AK 99523 PH: 907-349-1010 FAX: 907-349-1015

| REVISION | BY | DATE |
|---|---|---|
| | | |

Project No. ____ Date OCT. 2011

Designed MRE

Drawn CM

Approved MRE

Sheet No. C1.2

G:\ACAD\CHEFORNAK\CYF1101 Sewage Lagoon\C1.2 LAGOON CROSS SECTIONS.dwg, 11/11/2013 2:15:18 PM, cmerz, \\Ce2main\LANIER MP C2050/LD520C PCL 6

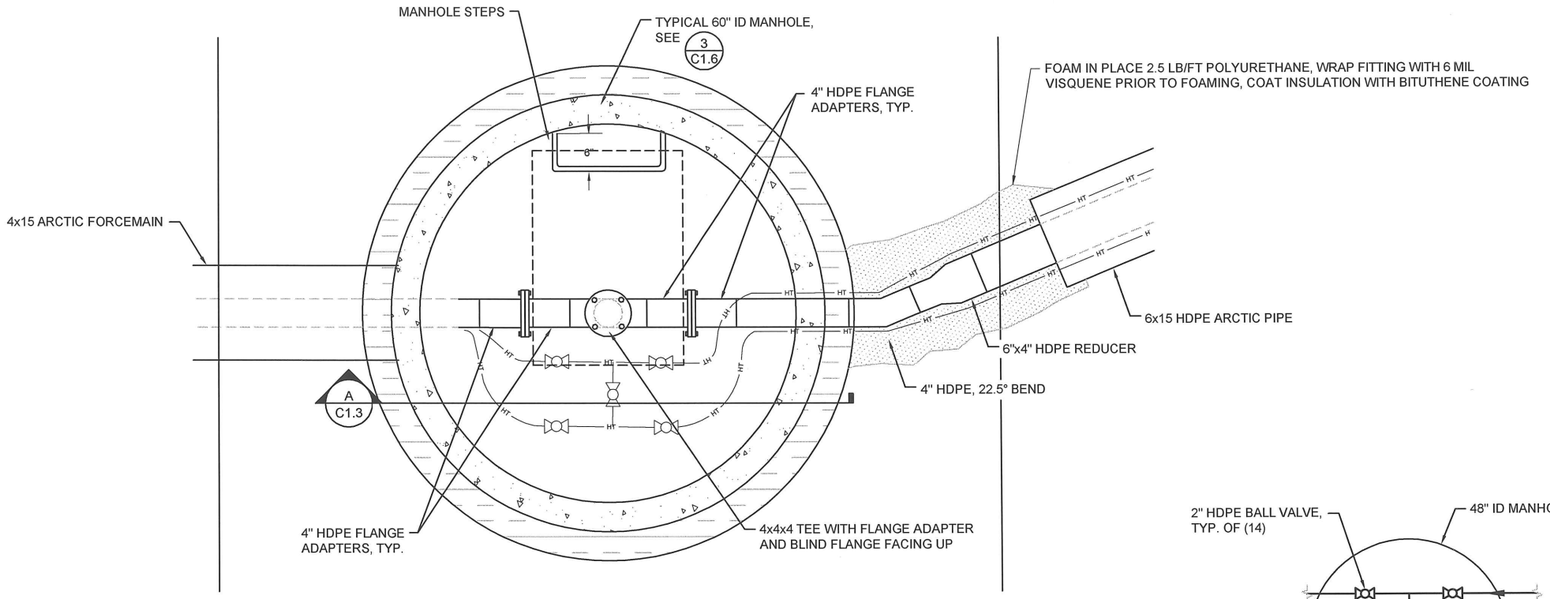


1 C1.3 LAGOON INLET STRUCTURE PLAN
1" = 1'-0"

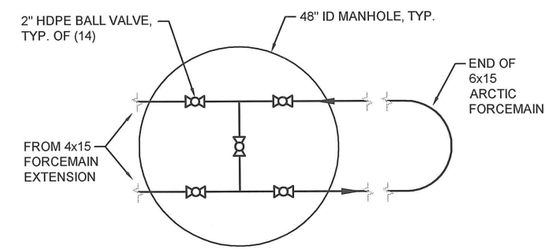


2 C1.3 GLYCOL HEAT TRACE SCHEMATIC
NTS

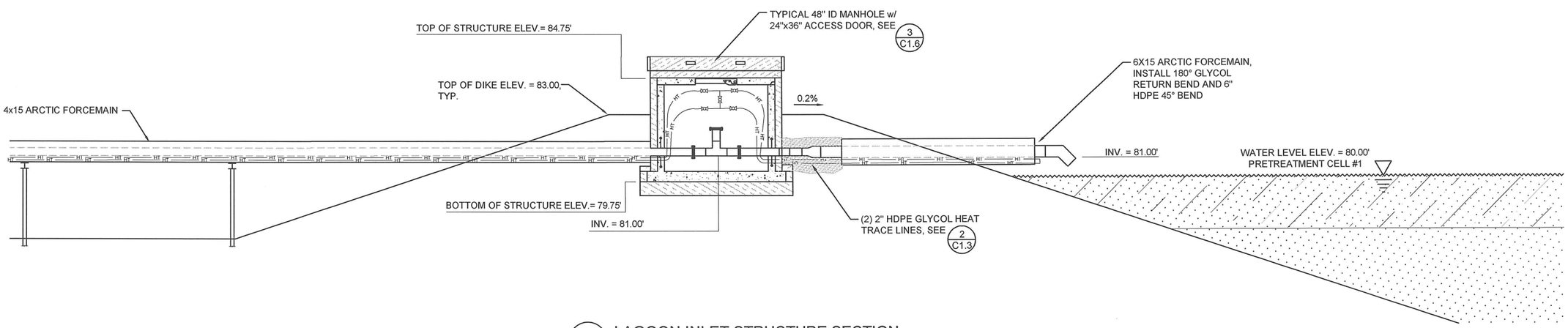


A C1.3 LAGOON INLET STRUCTURE SECTION
3/8" = 1'-0"

RECORD DRAWING CERTIFICATE
THESE DRAWINGS REFLECT RECORDED INFORMATION OBTAINED DURING CONSTRUCTION. INFORMATION PROVIDED HEREIN IS ACCURATE TO THE BEST OF MY KNOWLEDGE.
NAME
DATE

SCALE: AS SHOWN
BAR IS ONE INCH ON ORIGINAL DRAWING
0 1"
IF NOT ONE INCH ON THIS SHEET, ADJUST SCALES ACCORDINGLY

CONSTRUCTION RECORD
FIELD BOOK
STAKING
FOREMAN
AS-BUILT
INSPECTOR

11-12-2013

STATE OF ALASKA 49TH
Michael R. Eckman No. 8252
REGISTERED PROFESSIONAL ENGINEER

FACULTATIVE LAGOON

LAGOON INLET STRUCTURE

CHEFORNAK, ALASKA

CE2 ENGINEERS, INC.
PO BOX 232048 ANCHORAGE, AK 99523 PH: 907-349-1010 FAX: 907-349-1015

| REVISION | BY | DATE |
|---|---|---|
| | | |

Project No. ____
Date OCT. 2011
Designed MRE
Drawn CM
Approved MRE

Sheet No.
C1.3

G:\ACAD\CHEFORNAK\CYF1101 Sewage Lagoon\C1.3 INTAKE STRUCTURE.dwg, 11/12/2013 2:06:38 PM, cmerz, \\Ce2main\LANIER MP C2050/LD520C PCL 6

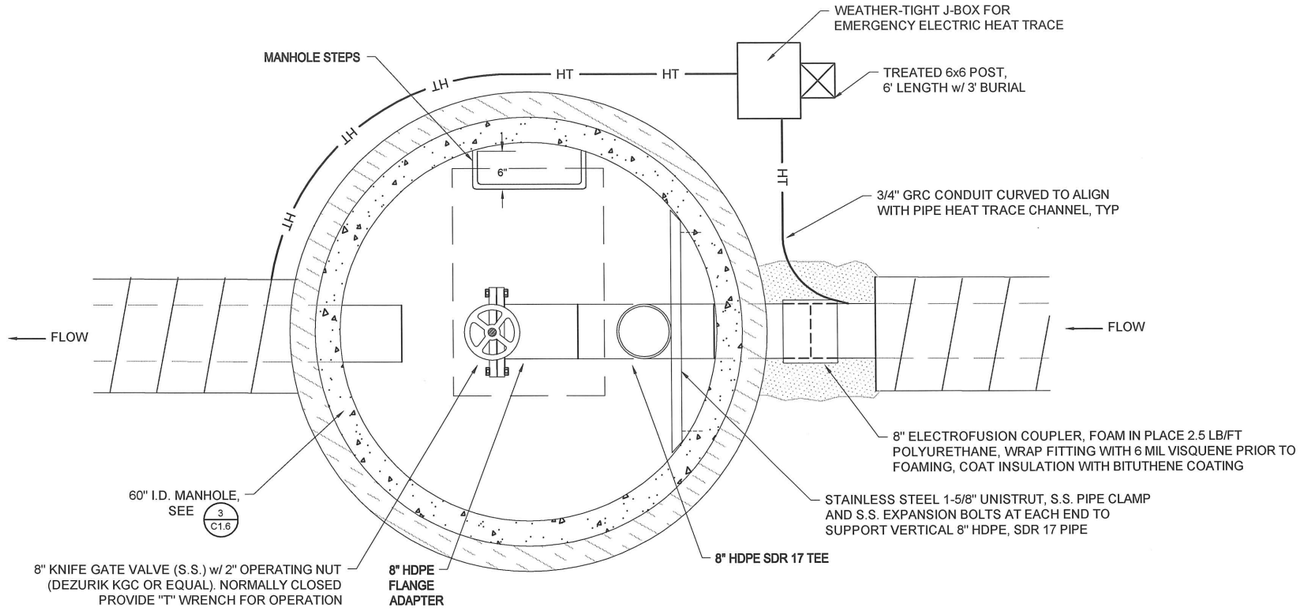


PLAN VIEW
1" = 1'-0"

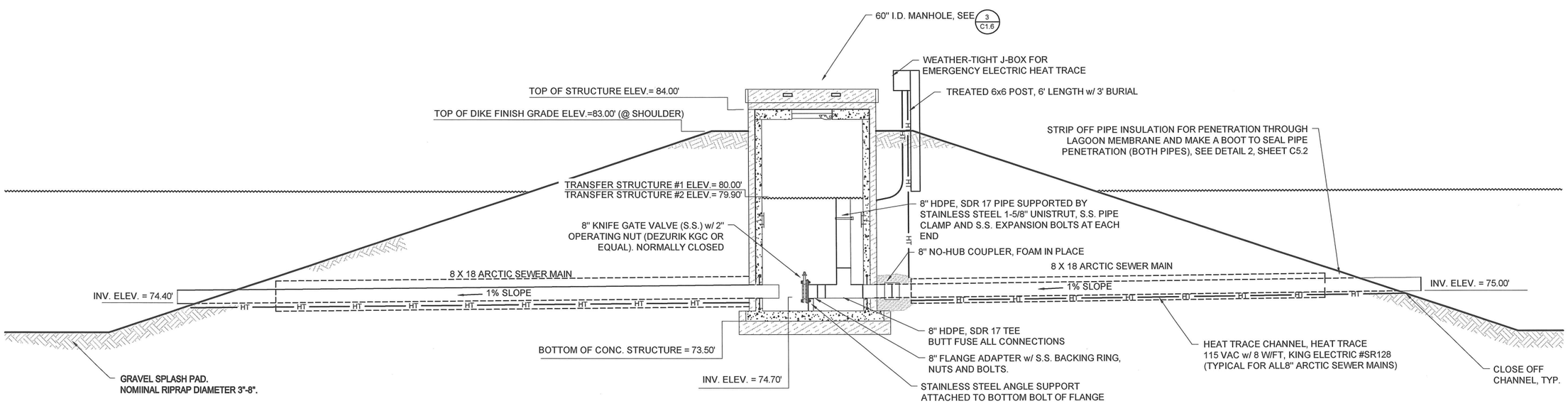


ELEVATION VIEW
3/8" = 1'-0"

# 1 / C1.4 CELL TRANSFER STRUCTURE

RECORD DRAWING CERTIFICATE
THESE DRAWINGS REFLECT RECORDED INFORMATION OBTAINED DURING CONSTRUCTION. INFORMATION PROVIDED HEREIN IS ACCURATE TO THE BEST OF MY KNOWLEDGE.
NAME DATE

SCALE: AS SHOWN
BAR IS ONE INCH ON ORIGINAL DRAWING 0 1"
IF NOT ONE INCH ON THIS SHEET, ADJUST SCALES ACCORDINGLY

CONSTRUCTION RECORD
FIELD BOOK
STAKING
FOREMAN
AS-BUILT
INSPECTOR

11-12-2013

STATE OF ALASKA 49TH Michael R. Eckman No. 6252 REGISTERED PROFESSIONAL ENGINEER

FACULTATIVE LAGOON
CELL TRANSFER STRUCTURE
CHEFORNAK, ALASKA

CE2 ENGINEERS, INC.
PO BOX 223246 ANCHORAGE, AK 99523 PH: 907-349-1010 FAX: 907-349-1015

| REVISION | BY | DATE |
|---|---|---|
| | | |

Project No. ____
Date OCT. 2011
Designed MRE
Drawn CM
Approved MRE

Sheet No. C1.4

G:\ACAD\CHEFORNAK\CYF1101 Sewage Lagoon\C1.4 Transfer Structure.dwg, 11/12/2013 2:16:50 PM, cmerz, \\Ce2main\LANIER MP C2050/LD520C PCL 6

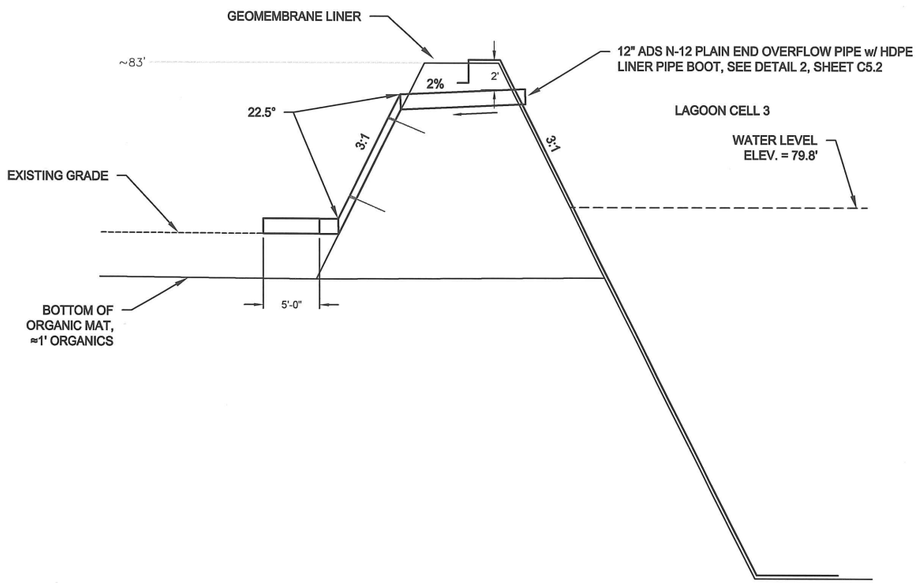


1 C1.5 LAGOON OVERFLOW PIPE
NTS

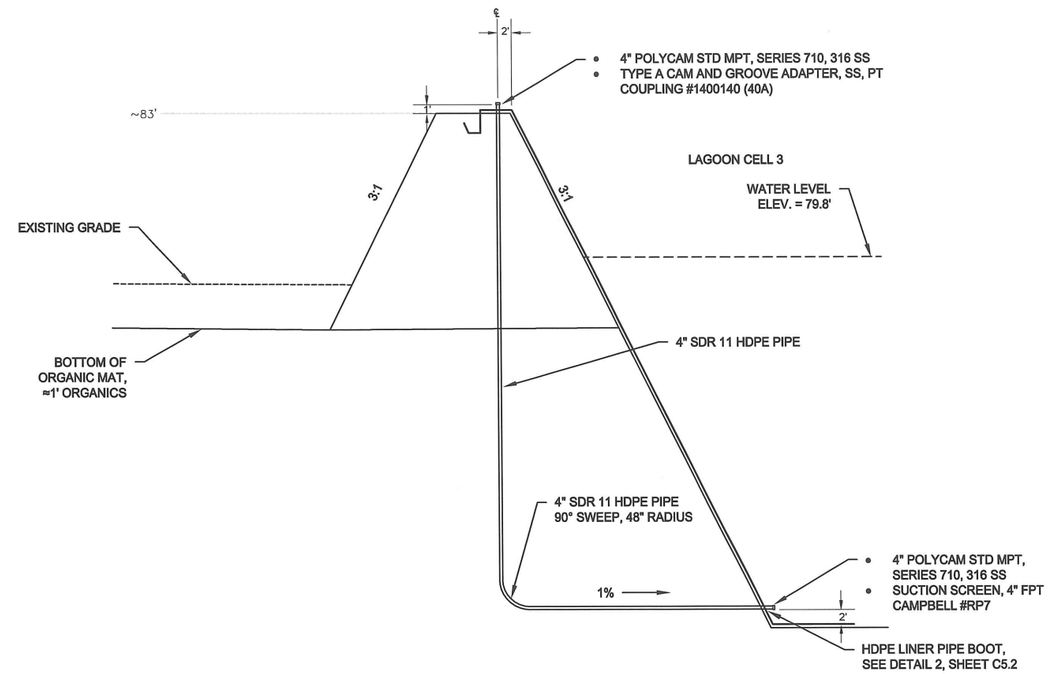


2 C1.5 LAGOON OUTLET DISCHARGE PIPE
NTS

RECORD DRAWING CERTIFICATE
THESE DRAWINGS REFLECT RECORDED INFORMATION OBTAINED DURING CONSTRUCTION. INFORMATION PROVIDED HEREIN IS ACCURATE TO THE BEST OF MY KNOWLEDGE.
NAME DATE

SCALE: AS SHOWN
BAR IS ONE INCH ON ORIGINAL DRAWING 0 1"
IF NOT ONE INCH ON THIS SHEET, ADJUST SCALES ACCORDINGLY

CONSTRUCTION RECORD
FIELD BOOK
STAKING
FOREMAN
AS-BUILT
INSPECTOR

11-12-2013

STATE OF ALASKA 49TH Michael R. Erdman No.8252 REGISTERED PROFESSIONAL ENGINEER

FACULTATIVE LAGOON

OUTLET DISCHARGE PIPE AND EMERGENCY OVERFLOW
CHEFORNAK, ALASKA

CE2 ENGINEERS, INC.
PO BOX 223246 ANCHORAGE, AK 99522 PH: 907-349-1010 FAX: 907-349-1015

| REVISION | BY | DATE |
|---|---|---|
| | | |

Project No.
Date OCT. 2011
Designed MRE
Drawn CM
Approved MRE

Sheet No.
C1.5

G:\ACAD\CHEFORNAK\CYF1101 Sewage Lagoon\C1.5 Overflow and Outlet.dwg, 11/12/2013 1:30:49 PM, cmerz, \\Ce2main\LANIER MP C2050/LD520C PCL 6

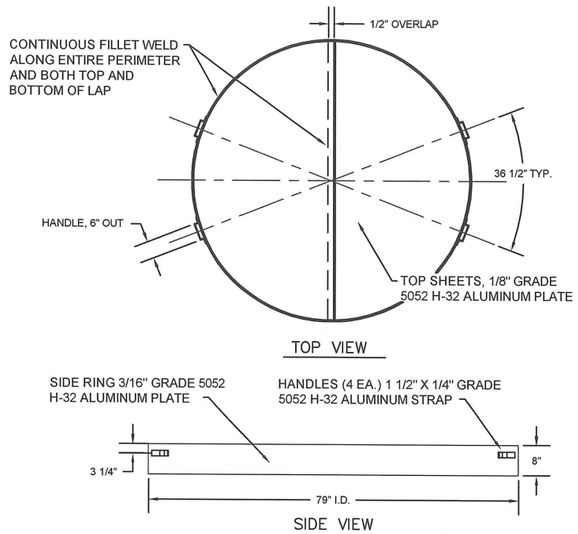


1 / C1.6 REMOVABLE TOP COVER
NTS

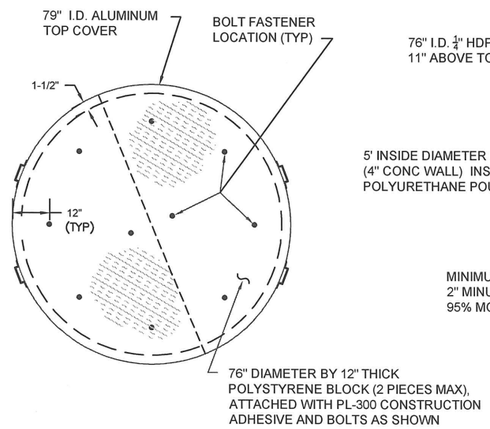


2 / C1.6 INSULATION FASTENERS
NTS

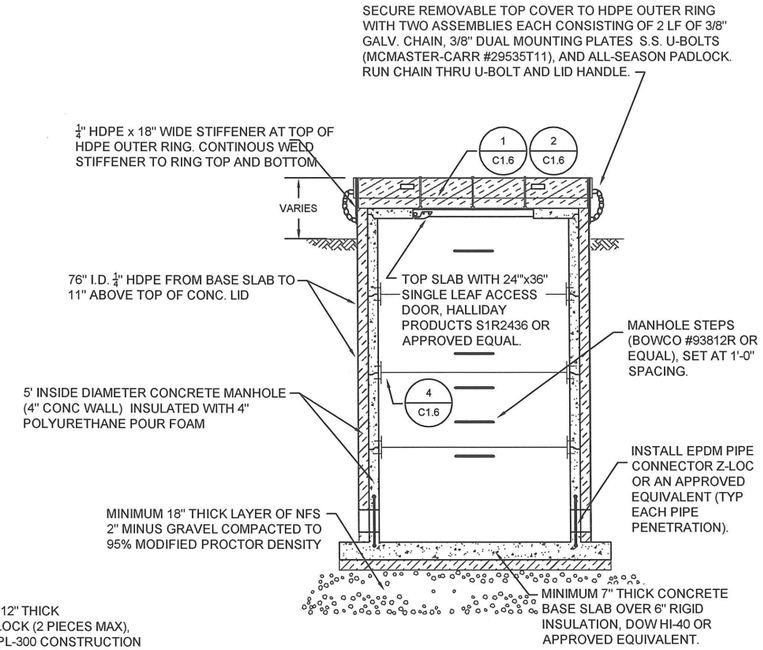


3 / C1.6 MANHOLE STRUCTURE
NTS

CONTROL STRUCTURE INSTALLATION NOTES

1. PRECAST MANHOLE SECTIONS SHALL BE REINFORCED CONCRETE CONFORMING TO ASTM C-478.
2. THE MANHOLE BASE SHALL BE INTEGRALLY CAST WITH THE BOTTOM BARREL SECTION. FIELD GROUT FILLETS, AS REQUIRED.
3. RAM-NEK SEALANT OR AN ENGINEER APPROVED RUBBER GASKET SUPPLIED BY THE MANHOLE MANUFACTURER SHALL BE INSTALLED TO PROVIDE A COMPLETE, CONTINUOUS SEAL AT ALL PRECAST JOINTS.
4. FERRULE LOOP INSERTS AND JOINT STRAPS SHALL BE PROVIDED AS SHOWN.
5. EPDM PIPE CONNECTORS (Z-LOCK OR EQUAL) SHALL BE INSTALLED AT ALL PIPE PENETRATIONS.
6. ALL PREFABRICATED ARCTIC PIPE FITTINGS SHALL BE FACTORY ASSEMBLED IN ACCORDANCE WITH THE DRAWINGS AND DELIVERED TO THE JOB SITE READY TO INSTALL.

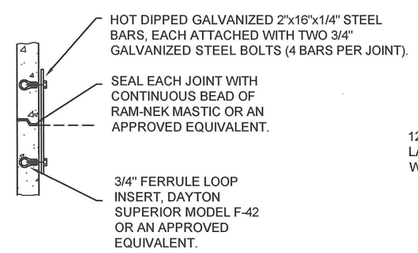


4 / C1.6 JOINT STRAPPING
NTS

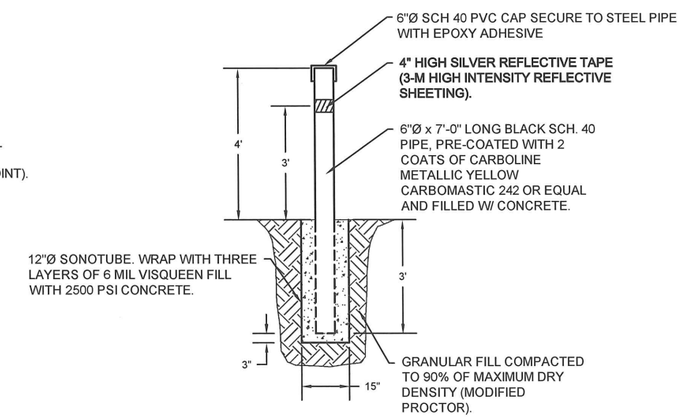


5 / C1.6 BOLLARD
NTS

RECORD DRAWING CERTIFICATE
THESE DRAWINGS REFLECT RECORDED INFORMATION OBTAINED DURING CONSTRUCTION. INFORMATION PROVIDED HEREIN IS ACCURATE TO THE BEST OF MY KNOWLEDGE.
NAME DATE

SCALE: AS SHOWN
BAR IS ONE INCH ON ORIGINAL DRAWING
0 1"
IF NOT ONE INCH ON THIS SHEET, ADJUST SCALES ACCORDINGLY

CONSTRUCTION RECORD
FIELD BOOK
STAKING
FOREMAN
AS-BUILT
INSPECTOR

11-12-2013

STATE OF ALASKA 49TH
Michael R. Erdman
No.6262
REGISTERED PROFESSIONAL ENGINEER

FACULTATIVE LAGOON
TYPICAL CONTROL STRUCTURE DETAILS
CHEFORNAK, ALASKA

CE2 ENGINEERS, INC.
PO BOX 223246 ANCHORAGE, AK 99522 PH: 907-349-1010 FAX: 907-349-1015

| REVISION | BY | DATE |
|---|---|---|
| | | |

Project No. ____
Date OCT. 2011
Designed MRE
Drawn CM
Approved MRE

Sheet No.
C1.6

G:\ACAD\CHEFORNAK\CYF1101 Sewage Lagoon\C1.6 Typ Control Struc Dtls.dwg, 11/6/2013 3:51:50 PM, cmerz, \\Ce2main\LANIER MP C2050/LD520C PCL 6

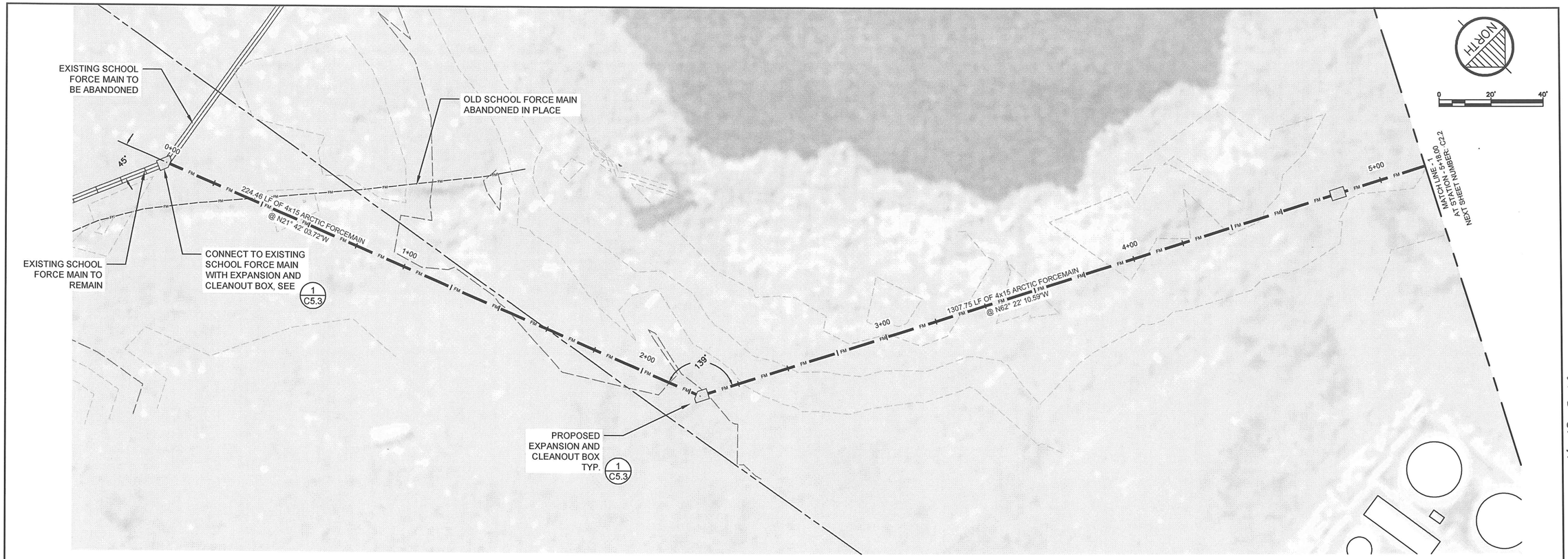


NOTE:
ELEVATIONS SHOWN ARE AT BOTTOM OF ARCTIC PIPE JACKET
(TOP OF PIPE SUPPORT BEAM)

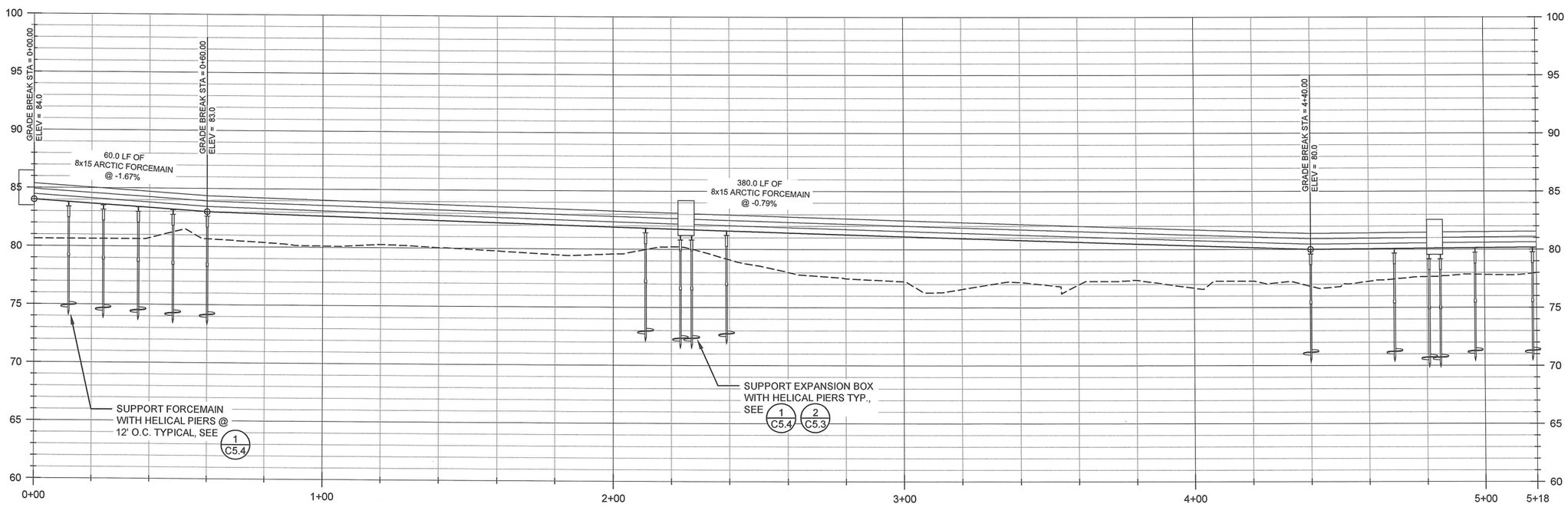


RECORD DRAWING CERTIFICATE

THESE DRAWINGS REFLECT RECORDED INFORMATION OBTAINED DURING CONSTRUCTION. INFORMATION PROVIDED HEREIN IS ACCURATE TO THE BEST OF MY KNOWLEDGE.

NAME DATE

SCALE:

BAR IS ONE INCH ON ORIGINAL DRAWING

0 1"

IF NOT ONE INCH ON THIS SHEET, ADJUST SCALES ACCORDINGLY

CONSTRUCTION RECORD

FIELD BOOK

STAKING

FOREMAN

AS-BUILT

INSPECTOR

11-12-2013

STATE OF ALASKA 49TH Michael R. Erdman No.8252 REGISTERED PROFESSIONAL ENGINEER

FACULTATIVE LAGOON

PLAN AND PROFILE

CHEFORNAK, ALASKA

CE2 ENGINEERS, INC.
PO BOX 222046 ANCHORAGE, AK 99522 PH: 907-349-0100 FAX: 907-349-0105

| REVISION | BY | DATE |
|---|---|---|
| | | |

Project No. ____ Date OCT. 2011
Designed ____
Drawn CM
Approved ____

Sheet No. C2.1

G:\ACAD\CHEFORNAK\CYF1101 Sewage Lagoon\C2.1 Plan and Profiles.dwg, 11/12/2013 1:12:59 PM, cmerz, \\Ce2main\LANIER MP C2050/LD520C PCL 6

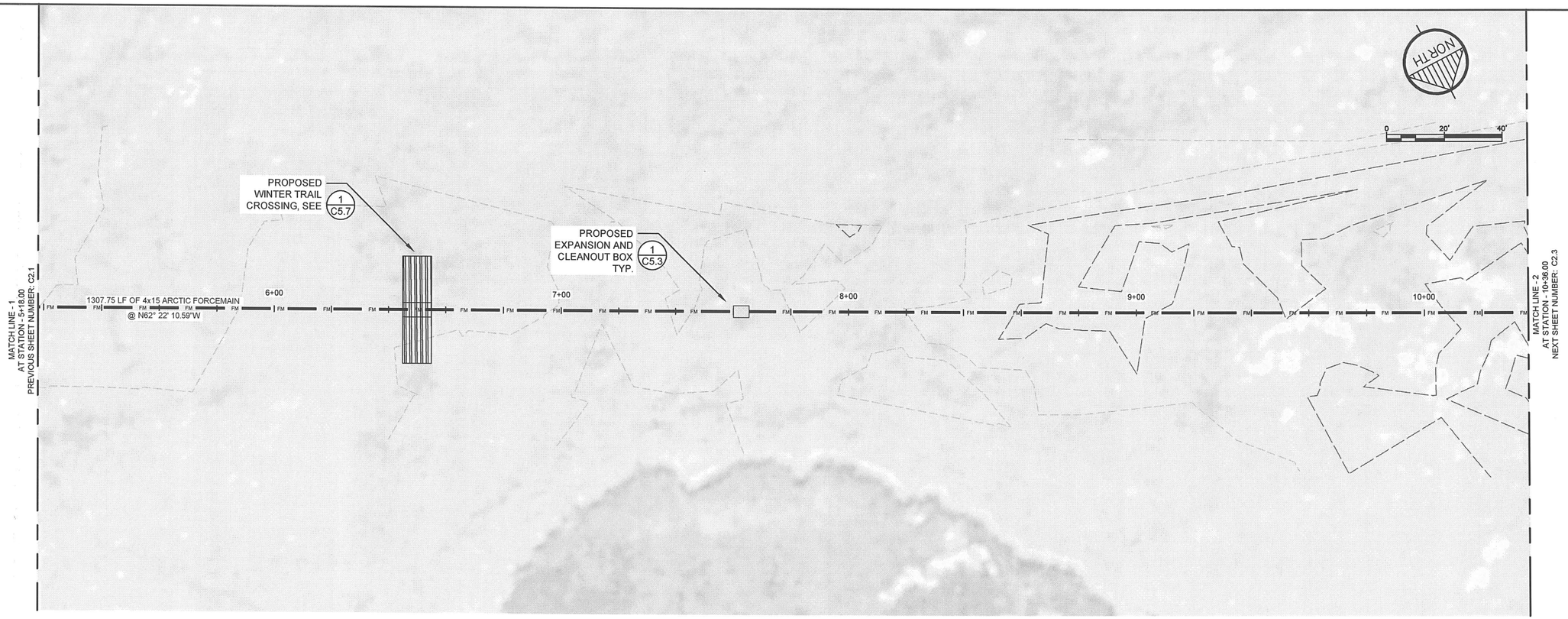


NOTE:
ELEVATIONS SHOWN ARE AT BOTTOM OF ARCTIC PIPE JACKET
(TOP OF PIPE SUPPORT BEAM)

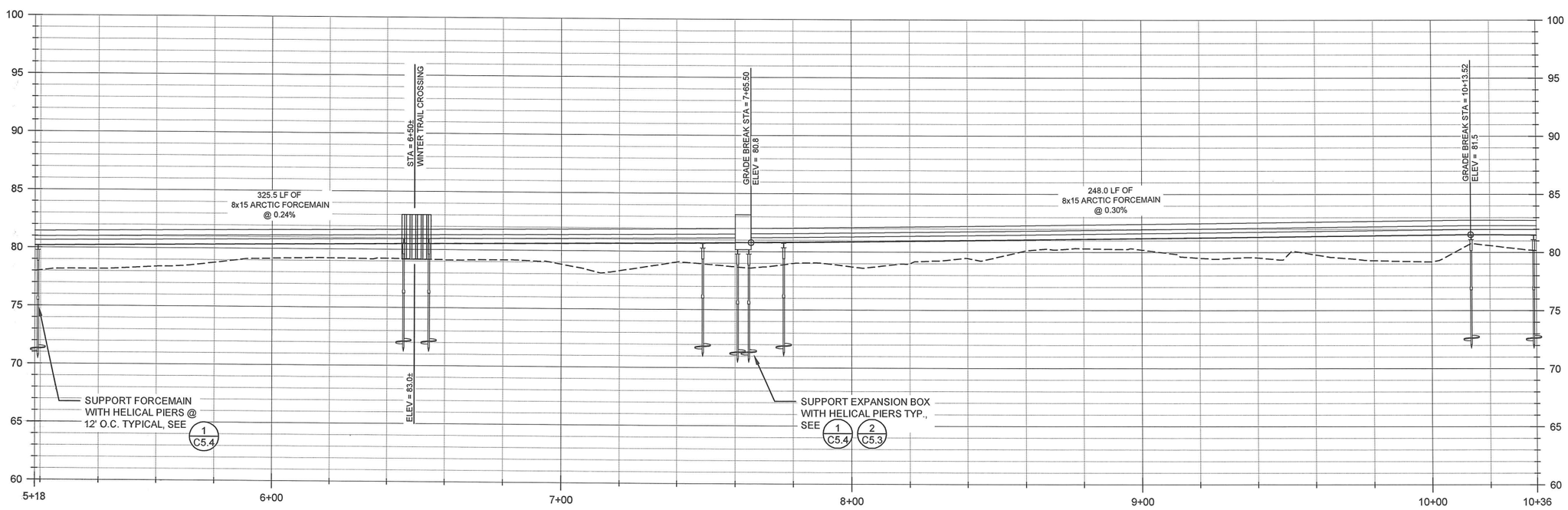


RECORD DRAWING CERTIFICATE

THESE DRAWINGS REFLECT RECORDED INFORMATION OBTAINED DURING CONSTRUCTION. INFORMATION PROVIDED HEREIN IS ACCURATE TO THE BEST OF MY KNOWLEDGE.

NAME DATE

SCALE:

BAR IS ONE INCH ON ORIGINAL DRAWING
0 1"

IF NOT ONE INCH ON THIS SHEET, ADJUST SCALES ACCORDINGLY

| CONSTRUCTION RECORD | |
|---|---|
| FIELD BOOK | |
| STAKING | |
| FOREMAN | |
| AS-BUILT | |
| INSPECTOR | |

11-12-2013

STATE OF ALASKA 49TH Michael R. Erdman No.6262 REGISTERED PROFESSIONAL ENGINEER

FACULTATIVE LAGOON

PLAN AND PROFILE

CHEFORNAK, ALASKA

CE2 ENGINEERS, INC.
PO BOX 223268 ANCHORAGE, AK 99523 PH: 907-349-1010 FAX: 907-349-1015

| REVISION | BY | DATE |
|---|---|---|
| | | |

Project No. ____
Date OCT. 2011
Designed ____
Drawn CM
Approved ____

Sheet No.
C2.2

G:\ACAD\CHEFORNAK\CYF1101 Sewage Lagoon\C2.1 Plan and Profiles.dwg, 11/12/2013 1:10:07 PM, cmerz, \\Ce2main\LANIER MP C2050/LD520C PCL 6

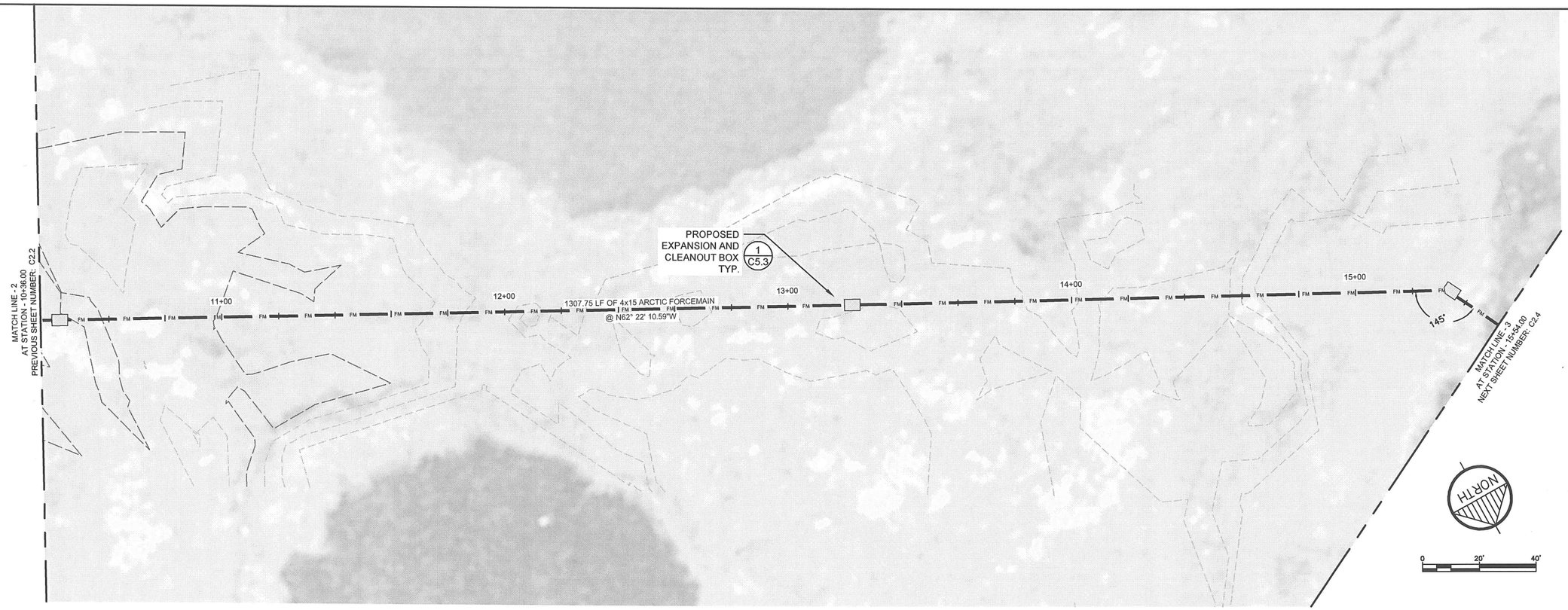


NOTE:
ELEVATIONS SHOWN ARE AT BOTTOM OF ARCTIC PIPE JACKET
(TOP OF PIPE SUPPORT BEAM)

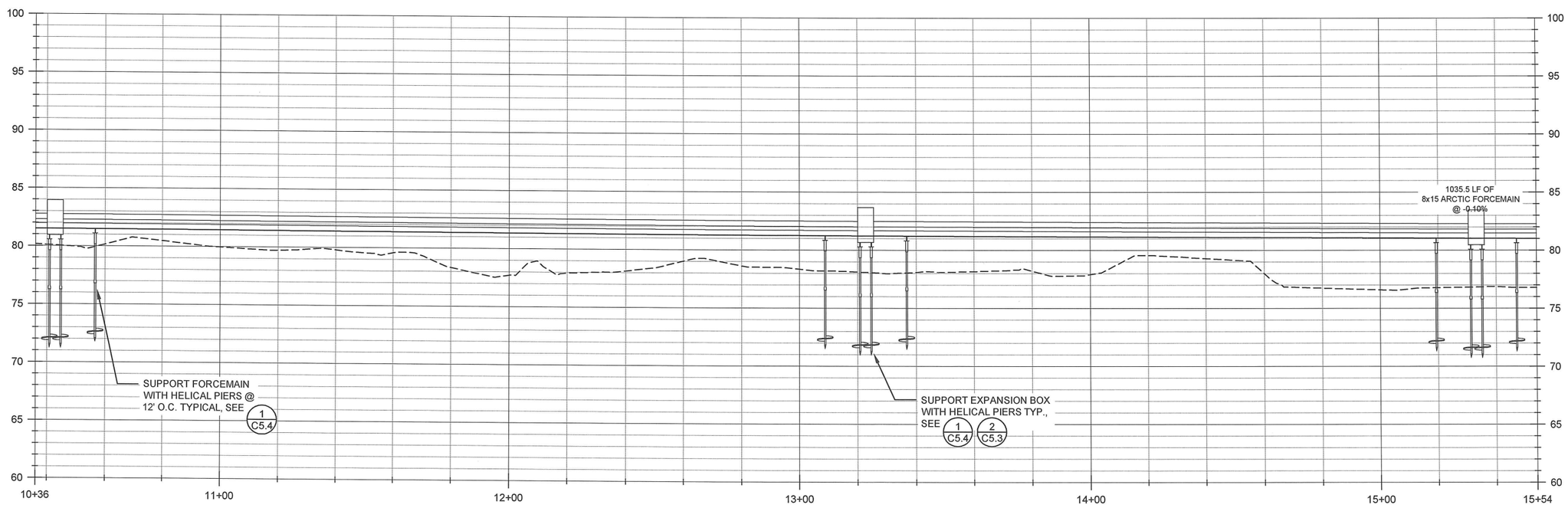


RECORD DRAWING CERTIFICATE

THESE DRAWINGS REFLECT RECORDED INFORMATION OBTAINED DURING CONSTRUCTION. INFORMATION PROVIDED HEREIN IS ACCURATE TO THE BEST OF MY KNOWLEDGE.

NAME DATE

SCALE:

BAR IS ONE INCH ON ORIGINAL DRAWING
0 1"

IF NOT ONE INCH ON THIS SHEET, ADJUST SCALES ACCORDINGLY

CONSTRUCTION RECORD

FIELD BOOK
STAKING
FOREMAN
AS-BUILT
INSPECTOR

11-12-2013

STATE OF ALASKA 49TH
Michael R. Erdman
No.6262
REGISTERED PROFESSIONAL ENGINEER

FACULTATIVE LAGOON

PLAN AND PROFILE

CHEFORNAK, ALASKA

CE2 ENGINEERS, INC.
PO BOX 222046 ANCHORAGE, AK 99522 PH: 907-349-1010 FAX: 907-349-1015

| REVISION | BY | DATE |
|---|---|---|
| | | |

Project No. ____
Date OCT. 2011
Designed ____
Drawn CM
Approved ____

Sheet No.
C2.3

G:\ACAD\CHEFORNAK\CYF1101 Sewage Lagoon\C2.1 Plan and Profiles.dwg, 11/12/2013 1:11:31 PM, cmerz, \\Ce2main\LANIER MP C2050/LD520C PCL 6

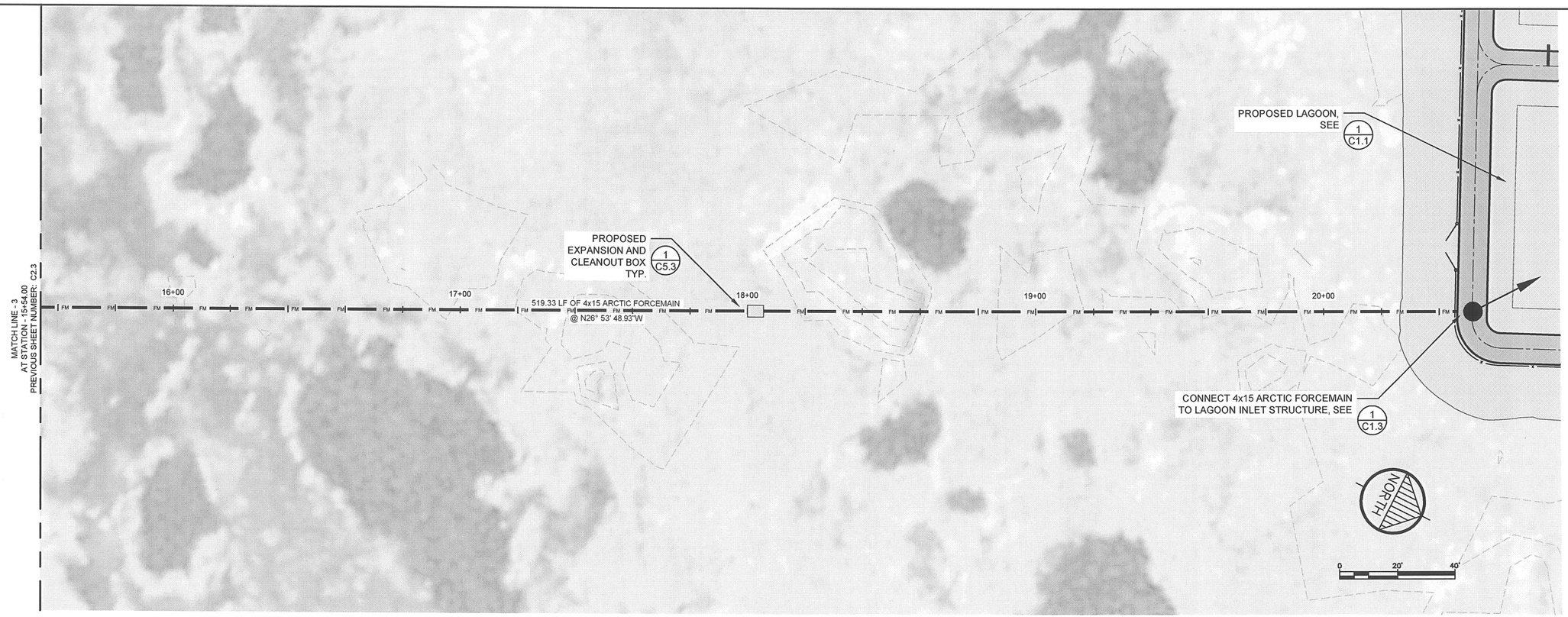


NOTE:
ELEVATIONS SHOWN ARE AT BOTTOM OF ARCTIC PIPE JACKET
(TOP OF PIPE SUPPORT BEAM)

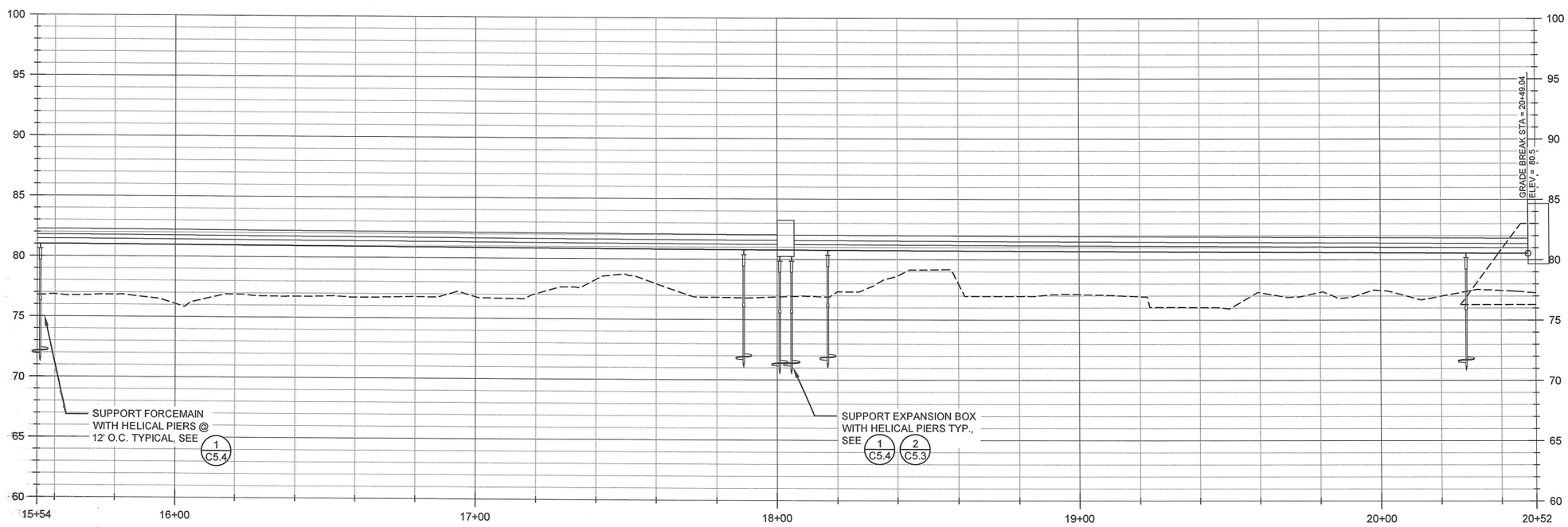


RECORD DRAWING CERTIFICATE

THESE DRAWINGS REFLECT RECORDED INFORMATION OBTAINED DURING CONSTRUCTION. INFORMATION PROVIDED HEREIN IS ACCURATE TO THE BEST OF MY KNOWLEDGE.

NAME DATE

SCALE:

BAR IS ONE INCH ON ORIGINAL DRAWING
0 1"

IF NOT ONE INCH ON THIS SHEET, ADJUST SCALES ACCORDINGLY

CONSTRUCTION RECORD

FIELD BOOK
STAKING
FOREMAN
AS-BUILT
INSPECTOR

11-12-2013

STATE OF ALASKA 49TH
Michael R. Erdman
No.6262
REGISTERED PROFESSIONAL ENGINEER

FACULTATIVE LAGOON

PLAN AND PROFILE

CHEFORNAK, ALASKA

CE2 ENGINEERS, INC.
PO BOX 222946 ANCHORAGE, AK 99522 PH: 907-349-1010 FAX: 907-349-1015

| REVISION | BY | DATE |
|---|---|---|
| | | |

Project No. ____
Date OCT. 2011
Designed ____
Drawn CM
Approved ____

Sheet No.
C2.4

G:\ACAD\CHEFORNAK\CYF1101 Sewage Lagoon\C2.1 Plan and Profiles.dwg, 11/12/2013 1:05:03 PM, cmerz, \\Ce2main\LANIER MP C2050/LD520C PCL 6

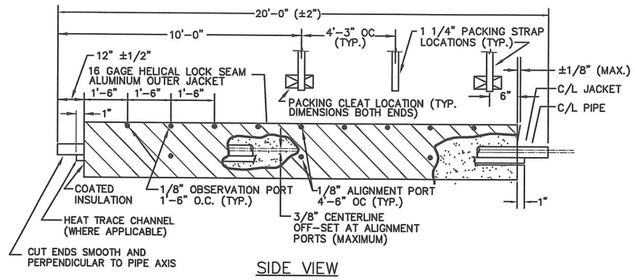


SIDE VIEW

NOTES:

1. D=INSERTION DEPTH OF BELL END GASKETED COUPLING +1 7/8"

| INNER CORE PIPE/OUTER JACKET SCHEDULE | | |
|---|---|---|
| NOMINAL CORE PIPE DIA. | INNER CORE PIPE O.D. | NOMINAL OUTER JACKET DIA. |
| 4 INCH | 4.50" | 15 INCH |
| 6 INCH | 6.625" | 15 INCH |

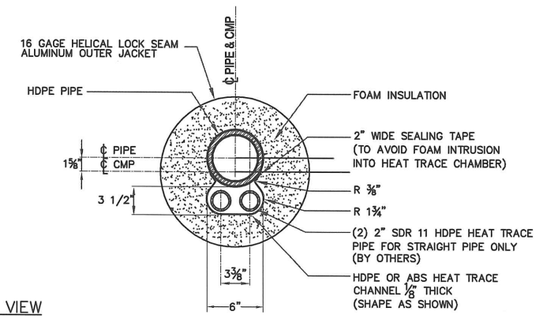


END VIEW

## 1 / C5.1 4" X 15"- 6" X 15" HDPE ARCTIC PIPE CROSS SECTION - GLYCOL TRACED

1 1/2"=1'-0"

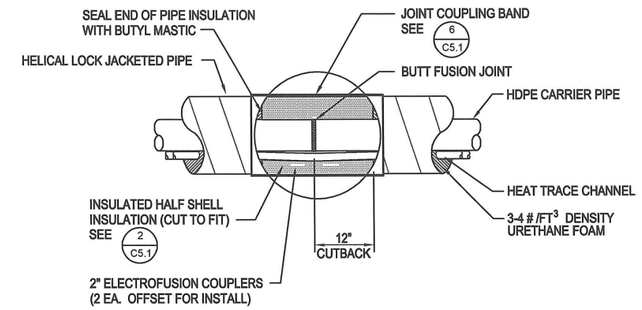


## 2 / C5.1 BUTT FUSION JOINT w/ HEAT TRACE ELECTROFUSION COUPLERS

NTS (FORCEMAIN ONLY)

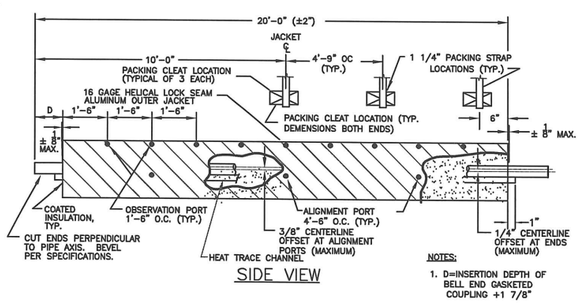


SIDE VIEW

NOTES:

1. D=INSERTION DEPTH OF BELL END GASKETED COUPLING +1 7/8"

| INNER CORE PIPE / OUTER JACKET SCHEDULE | | |
|---|---|---|
| NOMINAL INSULATED PIPE | INNER CORE PIPE O.D. | NOMINAL OUTER JACKETING |
| 8 INCH | 8.625" | 15 INCH |

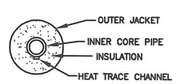


END VIEW

## 3 / C5.1 8" X 15" HDPE ARCTIC PIPE W/ HEAT TRACE CHANNEL

1 1/2"=1'-0"

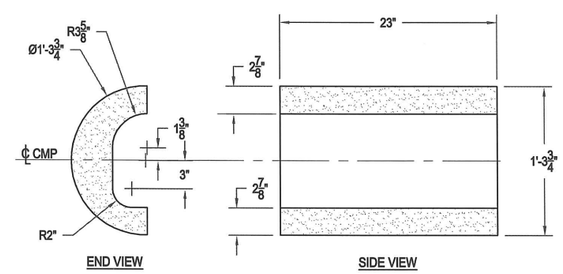


END VIEW SIDE VIEW

## 5 / C5.1 6" X 15" HDPE ARCTIC PIPE HALF SHELL - GLYCOL TRACED

1 1/2"=1'-0"




| BAND LENGTH L | # OF BOLTS EA. | BOLT SPACING S | EDGE DISTANCE D |
|---|---|---|---|
| 36" | 4 | 9 | 4½" |

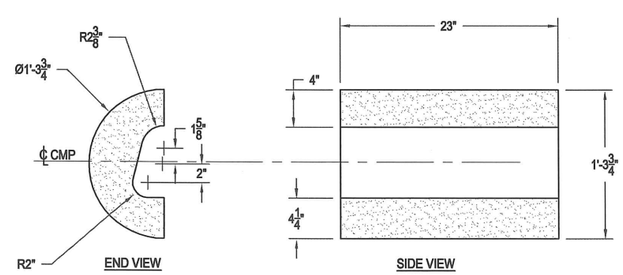


END VIEW SIDE VIEW

## 6 / C5.1 4" X 15" HDPE ARCTIC PIPE HALF SHELL - GLYCOL TRACED

1 1/2"=1'-0"

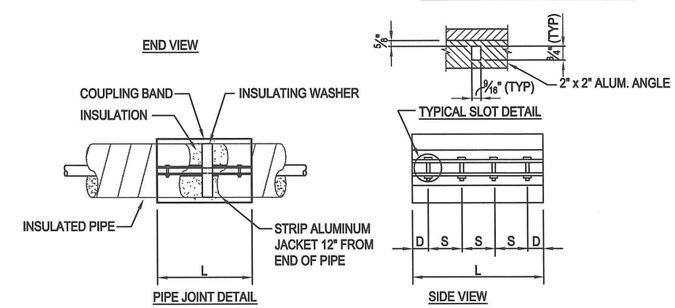


## 6 / C5.1 ARCTIC PIPE COUPLING BAND

NTS

RECORD DRAWING CERTIFICATE

THESE DRAWINGS REFLECT RECORDED INFORMATION OBTAINED DURING CONSTRUCTION. INFORMATION PROVIDED HEREIN IS ACCURATE TO THE BEST OF MY KNOWLEDGE.

NAME DATE

SCALE: AS SHOWN

BAR IS ONE INCH ON ORIGINAL DRAWING 0 1"

IF NOT ONE INCH ON THIS SHEET, ADJUST SCALES ACCORDINGLY

CONSTRUCTION RECORD

FIELD BOOK

STAKING

FOREMAN

AS-BUILT

INSPECTOR

11-12-2013

STATE OF ALASKA 49TH Michael R. Eckman No. 8252 REGISTERED PROFESSIONAL ENGINEER

FACULTATIVE LAGOON

ARTIC PIPE DETAILS

CHEFORNAK, ALASKA

CE2 ENGINEERS, INC.

PO BOX 232946 ANCHORAGE, AK 99523 PH: 907-349-1010 FAX: 907-349-1015

| REVISION | BY | DATE |
|---|---|---|
| | | |

Project No. ____ Date OCT. 2011 Designed MRE Drawn DDR Approved MRE

Sheet No. C5.1

G:\ACAD\CHEFORNAK\CYF1101 Sewage Lagoon\C5.1 ARCTIC PIPE DETAILS rev 2.dwg, 11/6/2013 12:04:25 PM, cmerz, \\Ce2main\LANIER MP C2050/LD520C PCL 6

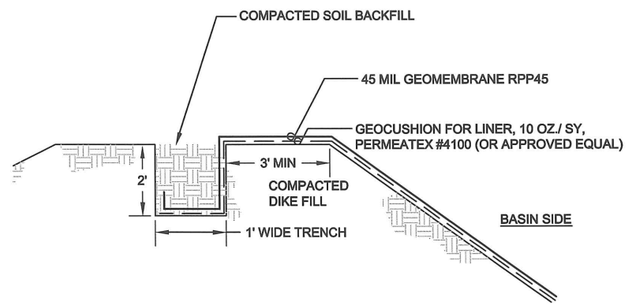


1 / C5.2 LINER KEY DETAIL
SCALE: NTS

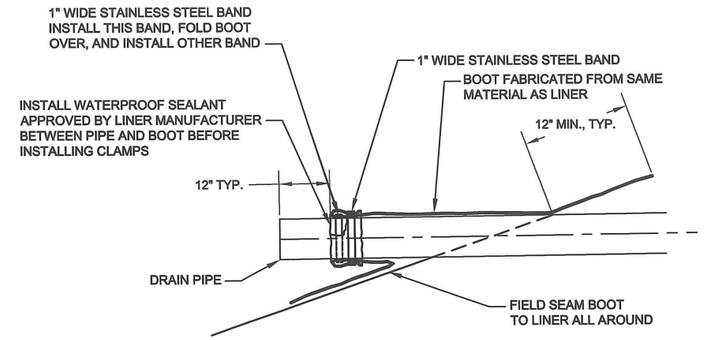


2 / C5.2 BOOT DETAIL
SCALE: NTS

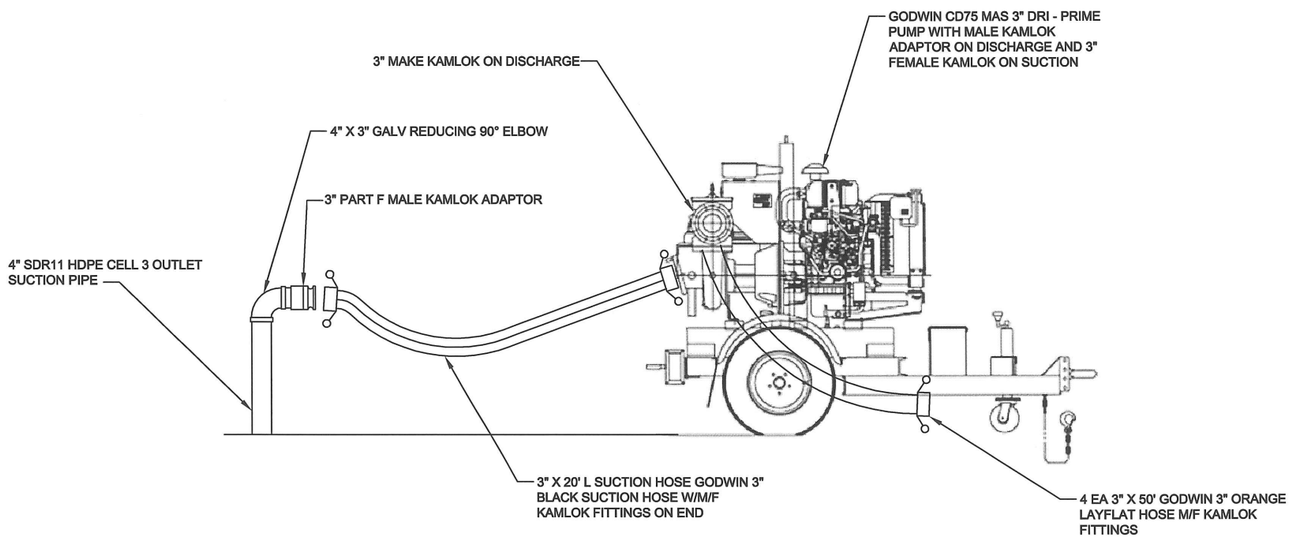


3 / C5.2 CELL 3 DISCHARGE PUMP ASSEMBLY
SCALE: NTS

RECORD DRAWING CERTIFICATE
THESE DRAWINGS REFLECT RECORDED INFORMATION OBTAINED DURING CONSTRUCTION. INFORMATION PROVIDED HEREIN IS ACCURATE TO THE BEST OF MY KNOWLEDGE.
NAME DATE

SCALE:
BAR IS ONE INCH ON ORIGINAL DRAWING
0 1"
IF NOT ONE INCH ON THIS SHEET, ADJUST SCALE ACCORDINGLY

CONSTRUCTION RECORD
FIELD BOOK
STAKING
FOREMAN
AS-BUILT
INSPECTOR

11-12-2013

STATE OF ALASKA 49TH
Michael R. Erdman No.6262
REGISTERED PROFESSIONAL ENGINEER

FACULTATIVE LAGOON
LAGOON DETAILS
CHEFORNAK, ALASKA

CE2 ENGINEERS, INC.
PO BOX 230248 ANCHORAGE, AK 99523 PH: 907-349-0109 FAX: 907-349-1015

| REVISION | BY | DATE |
|---|---|---|
| | | |

Project No.
Date OCT. 2011
Designed
Drawn RZ
Approved

Sheet No.
C5.2

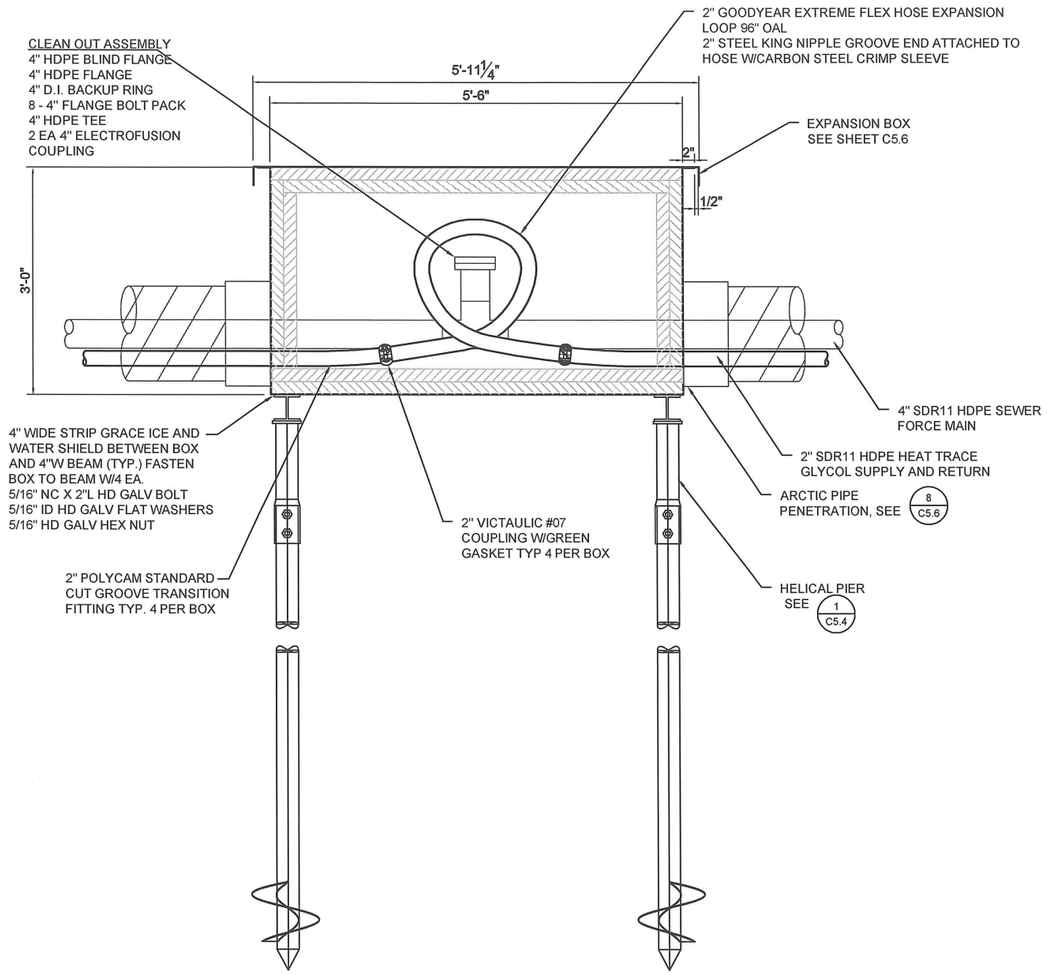


1 C5.3 EXPANSION AND CLEANOUT BOX ELEVATION
1" = 2'-0"

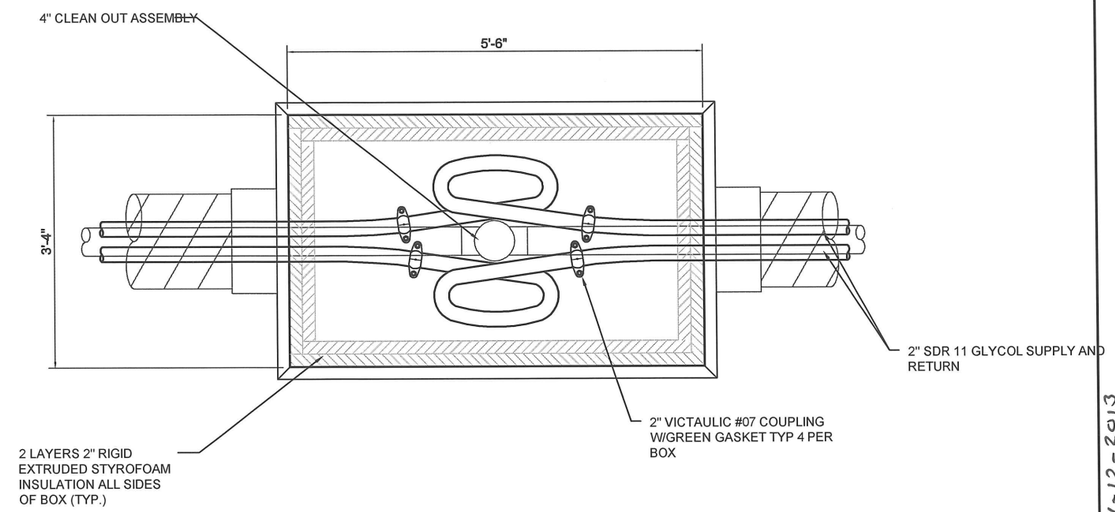


2 C5.3 EXPANSION AND CLEANOUT BOX PLAN
1" = 2'-0"

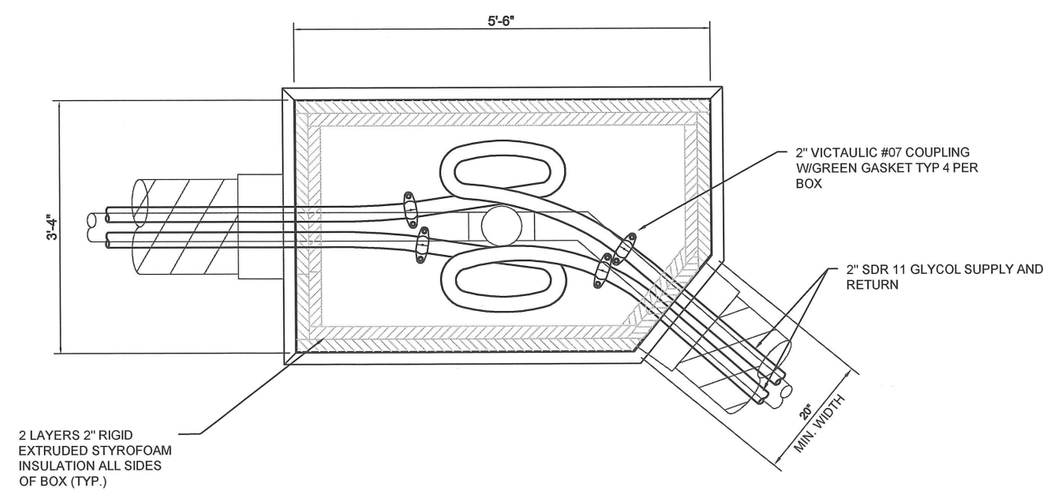


3 C5.3 EXPANSION AND CLEANOUT BOX WITH ANGLED POINT - PLAN
1" = 2'-0"

RECORD DRAWING CERTIFICATE
THESE DRAWINGS REFLECT RECORDED INFORMATION OBTAINED DURING CONSTRUCTION. INFORMATION PROVIDED HEREIN IS ACCURATE TO THE BEST OF MY KNOWLEDGE.
NAME DATE

SCALE: AS SHOWN
BAR IS ONE INCH ON ORIGINAL DRAWING 0 1"
IF NOT ONE INCH ON THIS SHEET, ADJUST SCALES ACCORDINGLY

CONSTRUCTION RECORD
FIELD BOOK
STAKING
FOREMAN
AS-BUILT
INSPECTOR

11-12-2013

STATE OF ALASKA 49TH Michael R. Eichman No.6202 REGISTERED PROFESSIONAL ENGINEER

FACULTATIVE LAGOON
EXPANSION BOX AND DETAILS
CHEFORNAK, ALASKA

CE2 ENGINEERS, INC.
PO BOX 223948 ANCHORAGE, AK 99523 PH: 907-349-1010 FAX: 907-349-1015

| REVISION | BY | DATE |
|---|---|---|
| | | |

Project No. ____
Date OCT. 2011
Designed DWB/LAP
Drawn DWB
Approved PCW

Sheet No.
C5.3

G:\ACAD\CHEFORNAK\CYF1101 Sewage Lagoon\C5.3 EXPANSION BOX.dwg, 11/11/2013 4:37:50 PM, cmerz, \\Ce2main\LANIER MP C2050/LD520C PCL 6

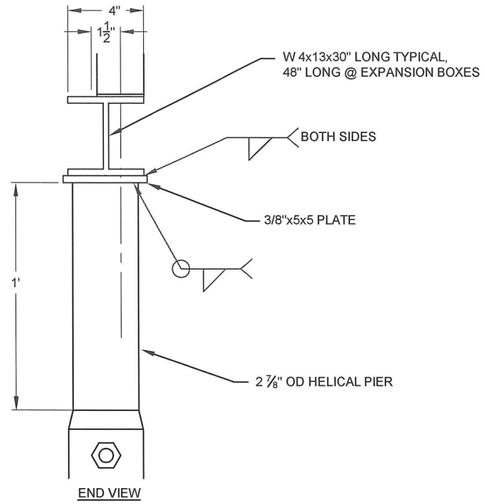


1 / C5.4 PIPE / EXPANSION BOX SUPPORT END VIEW
SCALE: NTS

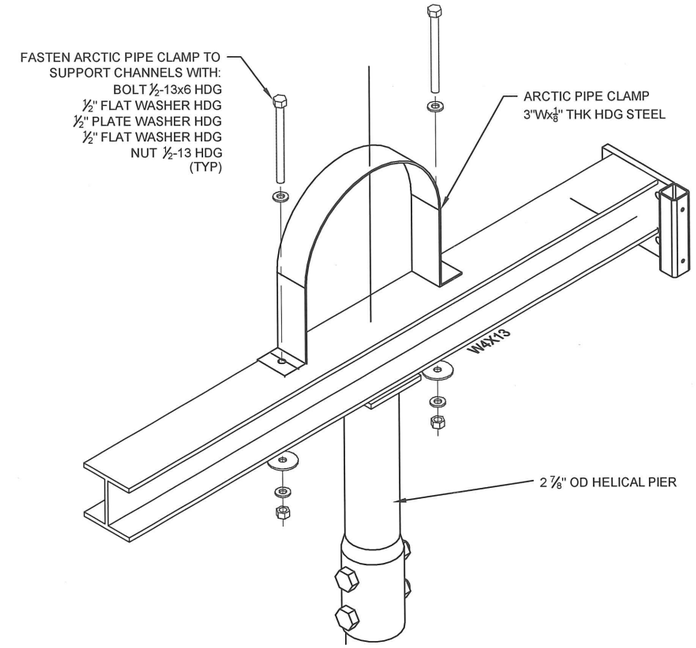


2 / C5.4 PIPE SUPPORT ASSEMBLY ISOMETRIC
SCALE: NTS

NOTE

WHEN INSTALLING ANCHORS, DRIVE UNTIL 8,000 FT-LB IS MEASURED. ADD EXTENSION SHAFTS AS REQUIRED. DEPTH TO FROZEN GROUND IS HIGHLY VARIABLE ALONG PIPELINE ROUTE. MIN. 8' EMBEDMENT.

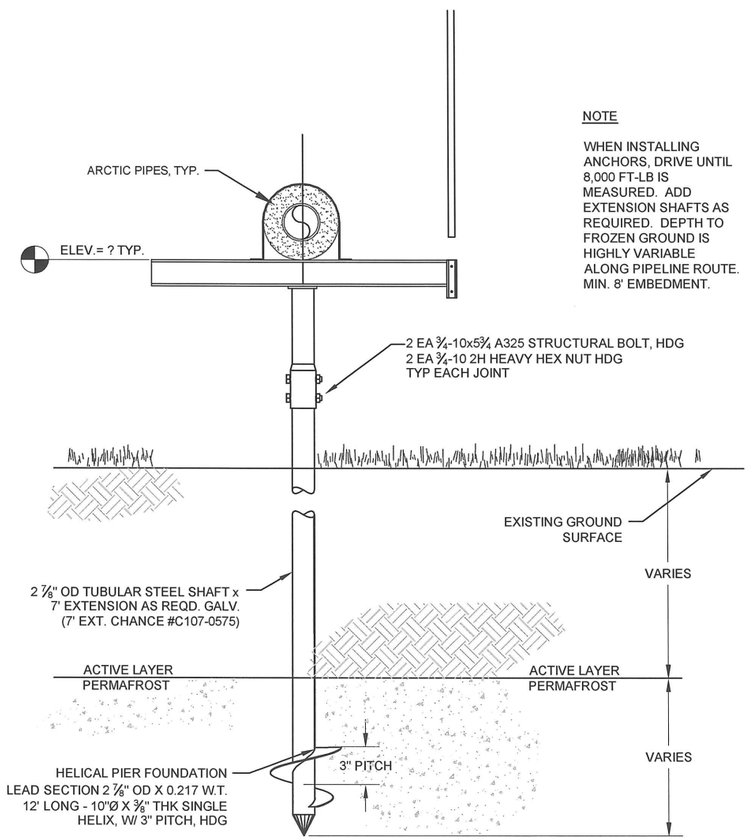


3 / C5.4 PIPE / EXPANSION BOX HELICAL PIER DETAIL
SCALE: NTS

NOTE

PLACE MARKER POLES AND BRACKETS ON ENDS OF PIPE SUPPORT RUNS, INSIDE AND OUTSIDE OF DIRECTIONAL CHANGES IN ALIGNMENT, AND APPROX. 48' INTERVALS ON STRAIGHT RUNS. PLACE CLOSER AS LOCAL CONDITIONS NECESSITATE.

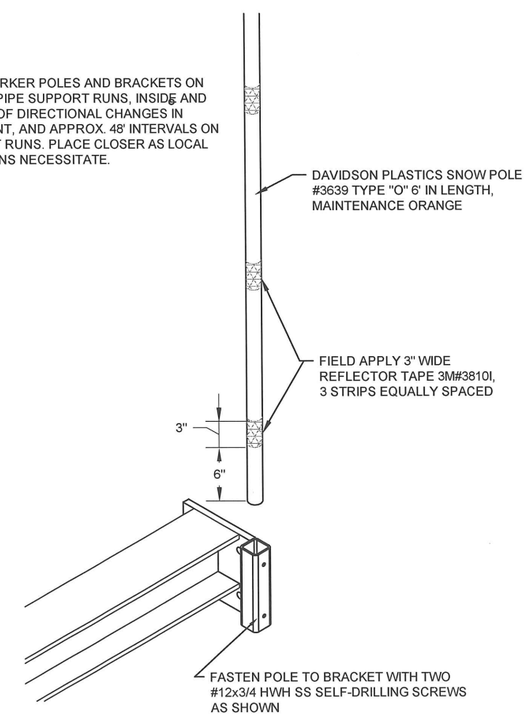


4 / C5.4 SNOW POLE ASSEMBLY ISOMETRIC
SCALE: NTS

RECORD DRAWING CERTIFICATE
THESE DRAWINGS REFLECT RECORDED INFORMATION OBTAINED DURING CONSTRUCTION. INFORMATION PROVIDED HEREIN IS ACCURATE TO THE BEST OF MY KNOWLEDGE.
NAME DATE

SCALE: AS SHOWN
BAR IS ONE INCH ON ORIGINAL DRAWING 0 1"
IF NOT ONE INCH ON THIS SHEET, ADJUST SCALES ACCORDINGLY

CONSTRUCTION RECORD
FIELD BOOK
STAKING
FOREMAN
AS-BUILT
INSPECTOR

11-12-2013
STATE OF ALASKA 49TH
Michael R. Erdman
No.6262
REGISTERED PROFESSIONAL ENGINEER

FACULTATIVE LAGOON
ARTIC PIPE HELICAL
PIER SUPPORT DETAILS
CHEFORNAK, ALASKA

CE2 ENGINEERS, INC.
PO BOX 232048 ANCHORAGE, AK 99523 PH: 907-349-1010 FAX: 907-349-1015

| REVISION | BY | DATE |
|---|---|---|
| | | |

Project No. ____
Date OCT. 2011
Designed MRE
Drawn DDR
Approved MRE

Sheet No.
C5.4

G:\ACAD\CHEFORNAK\CYF1101 Sewage Lagoon\C5.4 HELICAL PIERS.dwg, 11/11/2013 2:24:33 PM, cmerz, \\Ce2main\LANIER MP C2050/LD520C PCL 6

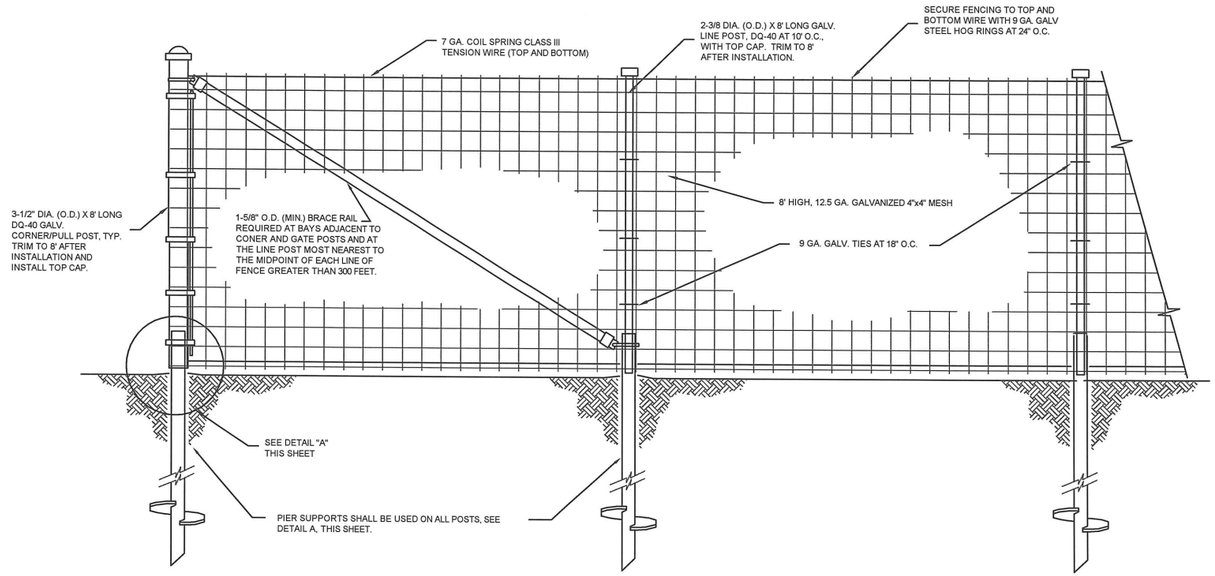


## 1 FENCE DETAIL (AT CORNER)

SCALE: NONE

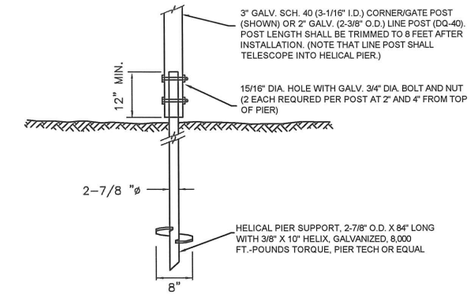


## DETAIL A - FENCE POST SUPPORT

NTS

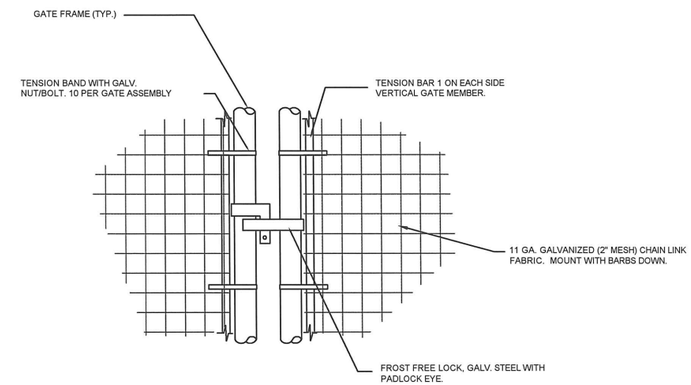


## DETAIL B - GATE LATCH DETAIL

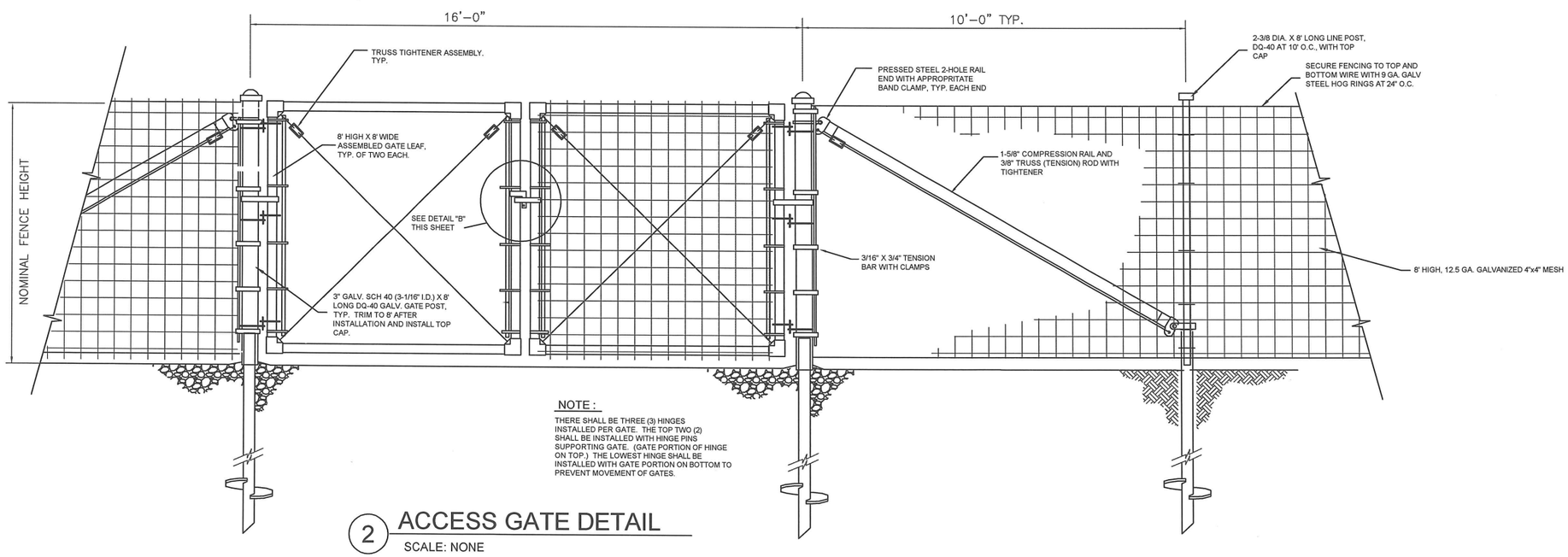


NOTE :

THERE SHALL BE THREE (3) HINGES INSTALLED PER GATE. THE TOP TWO (2) SHALL BE INSTALLED WITH HINGE PINS SUPPORTING GATE. (GATE PORTION OF HINGE ON TOP.) THE LOWEST HINGE SHALL BE INSTALLED WITH GATE PORTION ON BOTTOM TO PREVENT MOVEMENT OF GATES.

## 2 ACCESS GATE DETAIL

SCALE: NONE

RECORD DRAWING CERTIFICATE

THESE DRAWINGS REFLECT RECORDED INFORMATION OBTAINED DURING CONSTRUCTION. INFORMATION PROVIDED HEREIN IS ACCURATE TO THE BEST OF MY KNOWLEDGE.

NAME DATE

SCALE: AS SHOWN

BAR IS ONE INCH ON ORIGINAL DRAWING 0 1"

IF NOT ONE INCH ON THIS SHEET, ADJUST SCALES ACCORDINGLY

CONSTRUCTION RECORD

FIELD BOOK

STAKING

FOREMAN

AS-BUILT

INSPECTOR

11-12-2013

STATE OF ALASKA 49TH Michael R. Eshman No. 8252 REGISTERED PROFESSIONAL ENGINEER

FACULTATIVE LAGOON

FENCING DETAILS

CHEFORNAK, ALASKA

CE2 ENGINEERS, INC.
PO BOX 232049 ANCHORAGE, AK 99523 PH: 907-349-1010 FAX: 907-349-1015

| REVISION | BY | DATE |
|---|---|---|
| | | |

Project No. ____
Date OCT. 2011
Designed PCW
Drawn CM
Approved PCW

Sheet No. C5.5

G:\ACAD\CHEFORNAK\CYF1101 Sewage Lagoon\C5.5 FENCE DETAILS.dwg, 11/6/2013 11:58:22 AM, cmerz, \\Ce2main\LANIER MP C2050/LD520C PCL 6

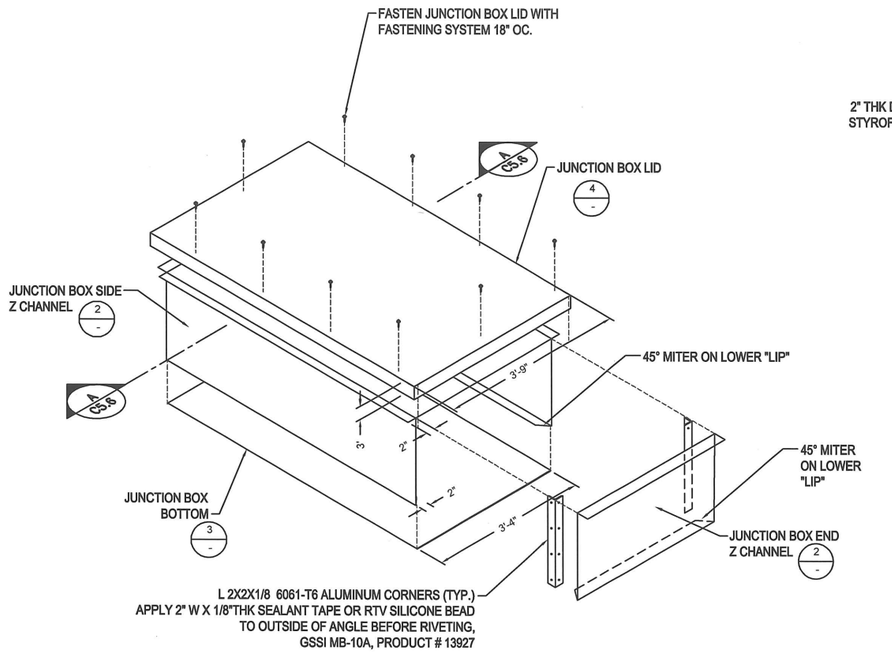


1 C5.6 JUNCTION BOX ISOMETRIC NTS

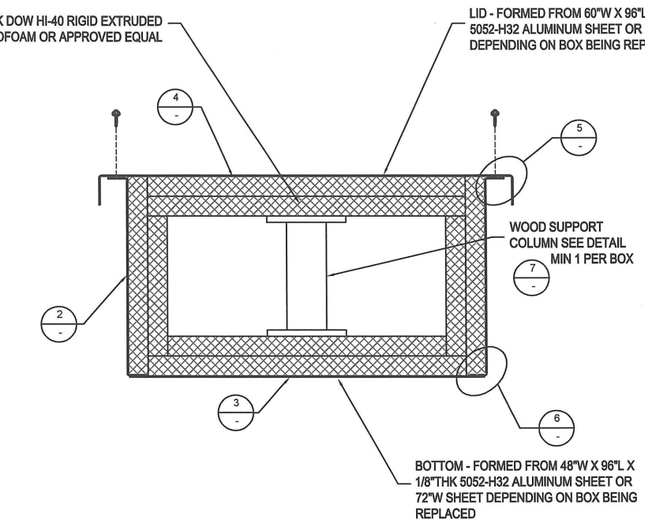


A C5.6 JUNCTION BOX SECTION NTS

NOTE: 45° MITER ON LOWER "LIP"

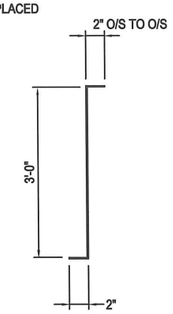


END VIEW

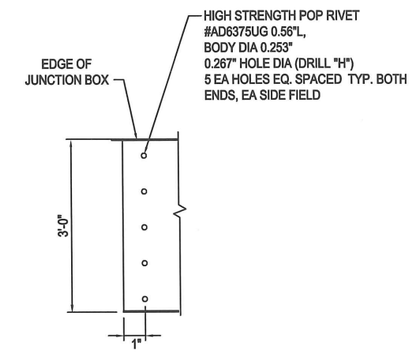


SIDE VIEW

Z SECTIONS FORMED FROM 24"W X 96"L X 1/8"THK 5052-H32 ALUMINUM SHEET OR 72"W SHEET DEPENDING ON BOX BEING REPLACED

2 C5.6 SIDE & END Z-CHANNEL DETAILS NTS

NOTE:

1. ALL ALUMINUM SHALL BE 5052-H32 1/8" THICK, UNLESS OTHERWISE NOTED.
2. BOTTOM OF JUNCTION BOX WILL BE SEALED w/ 2"W X 1/8" THK SEALANT TAPE, GSSI MB-10A, PRODUCT #13927, OR RTV SILICONE BEAD
3. FOR FORCE MAIN ANGLE POINT JUNCTION BOXES, CHAMFER ONE END OF THE BOX AS SHOWN ON DETAIL3, SHEET C5.3

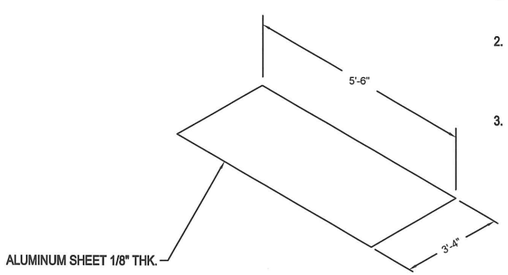


3 C5.6 BOTTOM SHEET DETAIL NTS

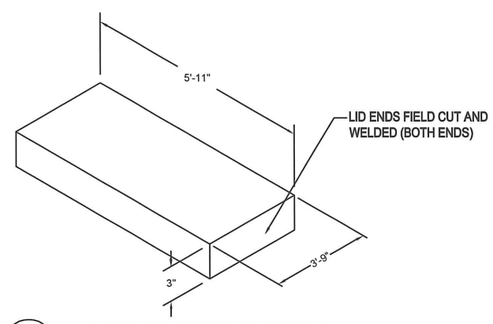


4 C5.6 JUNCTION BOX LID DETAIL NTS

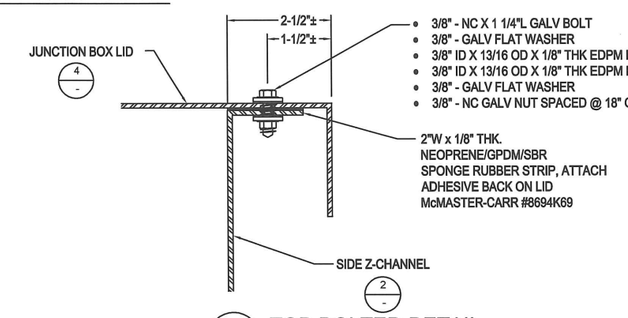


5 C5.6 TOP BOLTED DETAIL NTS

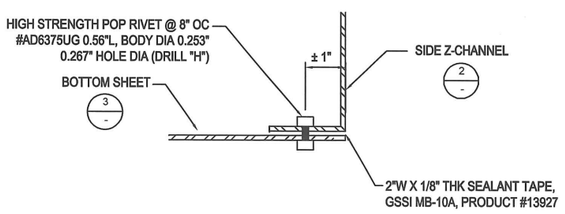


6 C5.6 BASE SEAM DETAIL NTS

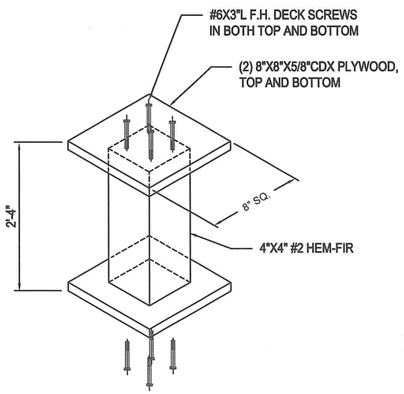


7 C5.6 WOOD SUPPORT COLUMN NTS

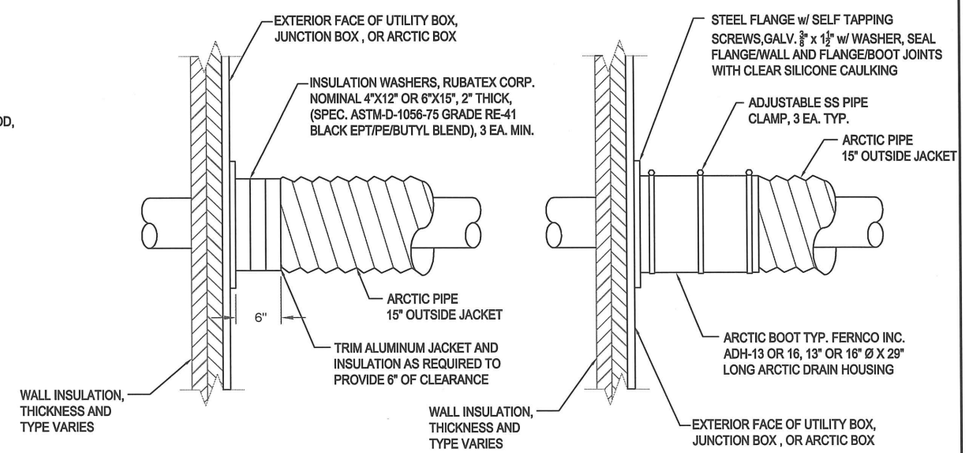


8 C5.6 PENETRATION DETAIL NTS

RECORD DRAWING CERTIFICATE
THESE DRAWINGS REFLECT RECORDED INFORMATION OBTAINED DURING CONSTRUCTION. INFORMATION PROVIDED HEREIN IS ACCURATE TO THE BEST OF MY KNOWLEDGE.
NAME DATE

SCALE: AS SHOWN
BARS IS ONE INCH ON ORIGINAL DRAWING 0 1"
IF NOT ONE INCH ON THIS SHEET, ADJUST SCALES ACCORDINGLY

CONSTRUCTION RECORD
FIELD BOOK
STAKING
FOREMAN
AS-BUILT
INSPECTOR

11-12-2013

STATE OF ALASKA 49TH REGISTERED PROFESSIONAL ENGINEER Michael R. Erdman No.8252

FACULTATIVE LAGOON
JUNCTION BOX ASSEMBLY DETAILS
CHEFORNAK, ALASKA

CE2 ENGINEERS, INC.
PO BOX 230246 ANCHORAGE, AK 99523 PH: 907-349-1010 FAX: 907-349-1015

| REVISION | BY | DATE |
|---|---|---|
| | | |

Project No. ____
Date OCT. 2011
Designed PCW
Drawn LAW
Approved PCW

Sheet No.
C5.6

G:\ACAD\CHEFORNAK\CYF1101 Sewage Lagoon\C5.6 Junction Box Details.dwg, 11/12/2013 1:26:27 PM, cmerz, \\Ce2main\LANIER MP C2050/LD520C PCL 6

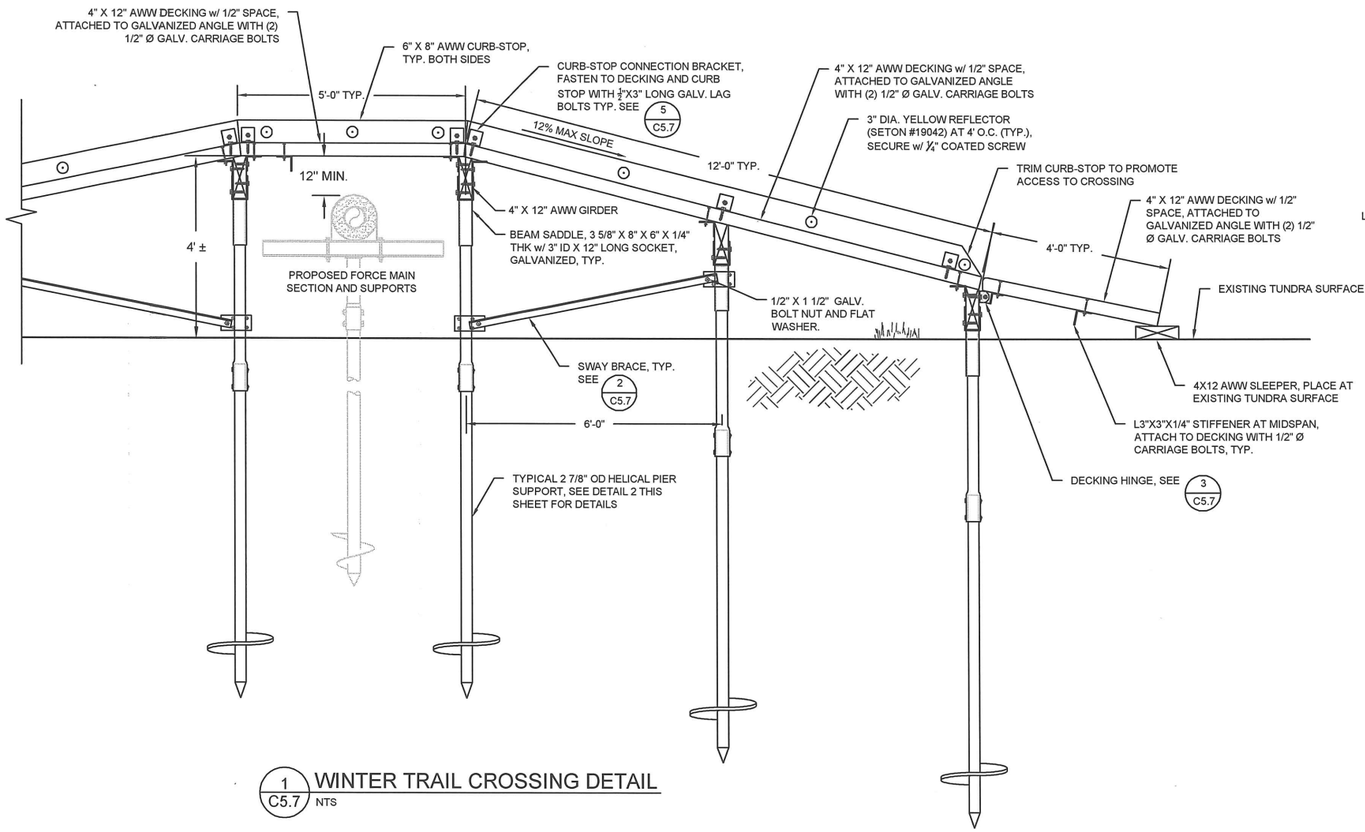


1 C5.7 WINTER TRAIL CROSSING DETAIL
NTS

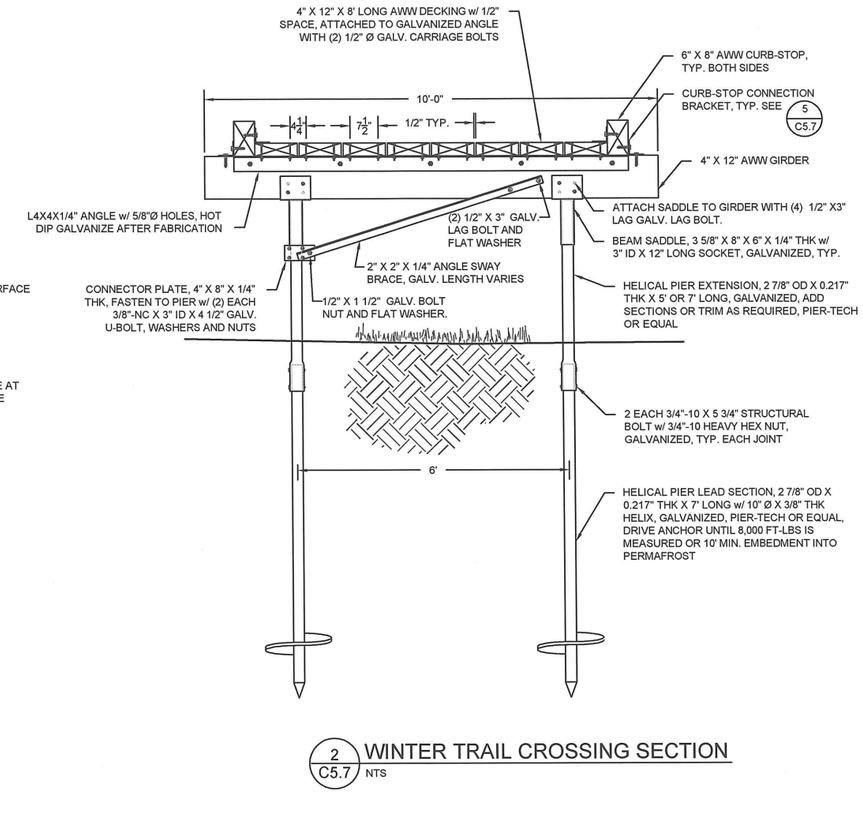


2 C5.7 WINTER TRAIL CROSSING SECTION
NTS

NOTES:

1. INSTALL HELICAL PIER SUPPORTS 6' O.C. AS REQUIRED TO MAINTAIN 1:12 MAX SLOPE TO EXISTING TUNDRA SURFACE.
2. HOT DIP GALVANIZE ALL ANGLES AND STIFFENERS AFTER FABRICATION.

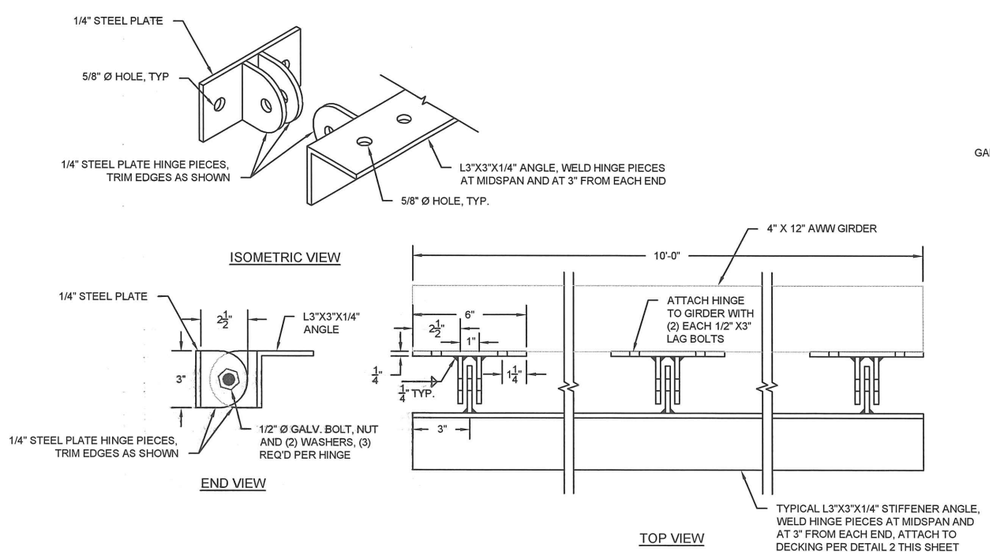


3 C5.7 DECKING HINGE DETAIL
NTS

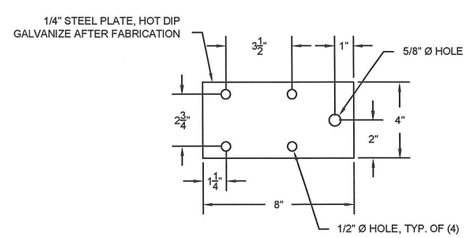


4 C5.7 CONNECTOR PLATE DETAIL
3"=1'-0"

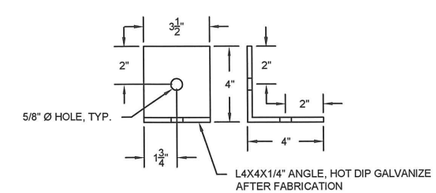


5 C5.7 CURB-STOP BRACKET DETAIL
3"=1'-0"

RECORD DRAWING CERTIFICATE
THESE DRAWINGS REFLECT RECORDED INFORMATION OBTAINED DURING CONSTRUCTION. INFORMATION PROVIDED HEREIN IS ACCURATE TO THE BEST OF MY KNOWLEDGE.
NAME DATE

SCALE: AS SHOWN
BARS IS ONE INCH ON ORIGINAL DRAWING 0 1"
IF NOT ONE INCH ON THIS SHEET, ADJUST SCALES ACCORDINGLY

CONSTRUCTION RECORD
FIELD BOOK
STAKING
FOREMAN
AS-BUILT
INSPECTOR

11-12-2013

STATE OF ALASKA 49TH
Michael R. Eidman No. 6262
REGISTERED PROFESSIONAL ENGINEER

FACULTATIVE LAGOON
WINTER TRAIL CROSSING DETAILS
CHEFORNAK, ALASKA

CE2 ENGINEERS, INC.
PO BOX 223948 ANCHORAGE, AK 99522 PH: 907-349-1010 FAX: 907-349-1015

| REVISION | BY | DATE |
|---|---|---|
| | | |

Project No.
Date OCT. 2011
Designed DWB
Drawn DWB
Approved LAP

Sheet No.
C5.7

G:\ACAD\CHEFORNAK\CYF1101 Sewage Lagoon\C5.7_WINTER TRAIL CROSSING.dwg, 11/12/2013 12:24:29 PM, cmerz, \\Ce2main\LANIER MP C2050/LD520C PCL 6