CITY OF CHEFORNAK
FACULTATIVE LAGOON PROJECT

TWO CELL LAGOON SYSTEM &
2,100 LF FORCE MAIN EXTENSION

In Cooperation with the State of Alaska
Department of Environmental Conservation
Village Safe Water Program

ISSUED FOR AGENCY REVIEW 65%- JAN. 2014

SHEET INDEX

No.	Title
	COVER SHEET
G1.0	GENERAL NOTES
G1.1	LEGEND AND WORK SUMMARY
G1.2	VICINITY MAP
G2.1	SURVEY CONTROL
G3.1	TEST HOLE BORING LOGS
G3.2	TEST HOLE BORING LOGS
G3.3	TEST HOLE BORING LOGS
G3.4	TEST HOLE BORING LOGS
G4.0	LAGOON OPERATING PLAN
C1.0	KEY MAP AND DESIGN CRITERIA
C1.1	LAGOON SITE PLAN
C1.2	LAGOON CROSS SECTIONS
C1.3	LAGOON INLET STRUCTURE
C1.4	CELL TRANSFER STRUCTURE
C1.5	LAGOON OVERFLOW
C2.1	PLAN AND PROFILE
C2.2	PLAN AND PROFILE
C2.3	PLAN AND PROFILE
C2.4	PLAN AND PROFILE
C5.1	ARCTIC PIPE DETAILS
C5.2	LAGOON AND FORCE MAIN DETAILS
C5.3	JUNCTION BOX AND DETAILS
C5.4	ARCTIC PIPE HELICAL PIER SUPPORT DETAILS
C5.5	FENCING DETAILS
C5.6	JUNCTION BOX ASSEMBLY DETAILS
C5.7	WINTER TRAIL CROSSSING DETAILS

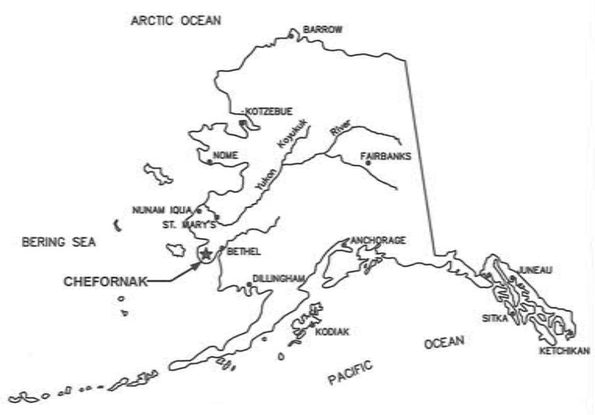

LOCATION MAP

STATE OF ALASKA 49TH Michael R. Erdman No.6252 REGISTERED PROFESSIONAL ENGINEER

CE2 ENGINEERS, INC.

PO BOX 232946 ANCHORAGE, AK 99523 PH: 907-349-1010 FAX: 907-349-1015

ANCHORAGE, ALASKA

CONSULTANT

RECORD DRAWING CERTIFICATE

THESE DRAWINGS REFLECT RECORDED INFORMATION OBTAINED DURING CONSTRUCTION.
INFORMATION PROVIDED HEREIN IS ACCURATE TO THE BEST OF MY KNOWLEDGE.

NAME _____ DATE _____

Project Number (Consultant) _____

VSW Project Manager _____

Construction Foreman _____

Final Design (Date) _____

ADEC Approval (Date) _____

Construction Period (From) _____ (To) _____

As-Builts (Date) _____

PROJECT NARRATIVE

THIS PROJECT WILL CONSIST OF 2,100 LINEAR FEET OF HELICAL PIER-SUPPORTED SEWER FORCE MAIN, AND A NEW TWO-CELL FACULTATIVE SEWAGE LAGOON.

THE NEW FORCE MAIN WILL CONNECT TO THE EXISTING SCHOOL FORCE MAIN, AND TRANSPORT WASTEWATER FROM THE SCHOOL, WASHETERIA AND FUTURE HONEYBUCKET DUMP STATION TO THE NEW LAGOON SITE, LOCATED APPROXIMATELY 2,700 FEET NORTHWEST OF THE EXISTING SCHOOL COMPLEX.

THE NEW SEWAGE LAGOON HAS A DESIGN LIFE OF 20 YEARS, AND IS SIZED TO TREAT 9,764 GALLONS OF WASTEWATER PER DAY, FROM THE COMMUNITY (HONEYBUCKETS), WASHETERIA AND SCHOOL. THE LAGOON WILL BE CONSTRUCTED BY EXCAVATING AND USING THE ON-SITE SILTY SOILS TO CONSTRUCT DIKES.

G:\ACAD\CHEFORNAK\CYF1101 Sewage Lagoon\COVER.dwg, 1/15/2014 4:00:19 PM, cmerz, \\Ce2main\LANIER MP C2050/LD520C PCL 6

GENERAL NOTES

A. GENERAL:

1. THE PROJECT SUPERINTENDENT SHALL MAINTAIN A CLEAN SET OF "AS BUILT" RECORD DRAWINGS SHOWING THE LOCATIONS AND SWING TIES TO ALL APPURTENANCES. ALL ELEVATIONS SHALL BE MARKED ASB (AS-BUILT) WITH THE CORRECT VALUE INSERTED. DRAWINGS SHALL BE KEPT CURRENT IN RED PENCIL ON A DAILY BASIS IN A NEAT, LEGIBLE FASHION. COPIES OF THE AS-BUILT DRAWINGS SHALL BE SUBMITTED TO THE CITY OF CHEFORNAK AND VSW UPON COMPLETION OF CONSTRUCTION.

2. SELECTED POINTS IN THE COMMUNITY ARE SHOWN ON SHEET G2.1, GIVING STATE PLANE COORDINATES AND ELEVATIONS.

3. EXISTING UTILITIES ARE SHOWN IN APPROXIMATE LOCATIONS TO THE BEST KNOWLEDGE OF THE ENGINEER AT THE TIME OF DESIGN. RECORDS MAY NOT BE COMPLETELY ACCURATE. THE PROJECT SUPERINTENDENT SHALL VERIFY HORIZONTAL AND VERTICAL LOCATIONS OF UTILITIES WITHIN EACH CONSTRUCTION REACH PRIOR TO BEGINNING WORK.

4. THE TOP OF DIKE ELEVATION IS ESTIMATED TO BE 2.0 FEET ABOVE THE 100-YEAR FLOOD ELEVATION.

B. ARCTIC PIPE:

1. CARRIER PIPE:
THE FORCEMAIN SHALL BE 4" HDPE, SDR 11. GRAVITY CELL TRANSFER PIPING SHALL BE 8" HDPE, SDR 17. ALL HDPE PIPING SHALL BE LISTED BY THE PPI WITH A DESIGNATION OF PE4710 AND A CELL CLASSIFICATION OF PE445574C OR BETTER AS PER ASTM D3350.

2. INSULATION:
ARCTIC PIPE INSULATION SHALL BE CLOSED CELL (ASTM D2341 CELL CLASSIFICATION 550674970034) URETHANE FOAM WITH A MAXIMUM K FACTOR OF 0.155 BTU-IN/HR-SF-DEG F. THE INSULATION CORE DENSITY SHALL BE BETWEEN 3.0 AND 4.0 LBS/CF. VOIDS GREATER THAN 0.05 CUBIC INCHES BEYOND 24 INCHES OF EITHER END OF THE PIPE SECTION WILL BE CAUSE FOR REJECTION OF THE PIPE. SEE TECHNICAL SPECIFICATION FOR FURTHER REQUIREMENTS.

3. OUTER JACKET MATERIAL:
THE OUTER JACKET MATERIAL FOR ALL ARCTIC PIPE AND FITTINGS SHALL BE 16 GAUGE HELICAL CORRUGATED ALUMINUM PIPE WITH SEAMS THAT WILL WITHSTAND A HYDROSTATIC PRESSURE OF 5 FEET OF WATER WITH NO LEAKAGE.

4. HYDRONIC HEAT TRACE:
HYDRONIC HEAT TRACE (WHERE SPECIFIED) SHALL BE A MINIMUM OF 2" DIA. HDPE, SDR 11 AND LISTED BY THE PPI WITH A DESIGNATION OF PE4710 AND A CELL CLASSIFICATION OF PE445574C OR BETTER AS PER ASTM D3350.

C. CLEARING AND GRUBBING:

1. THE CONSTRUCTION CREW SHALL REMOVE BRUSH, VEGETATIVE MAT, PEAT AND OTHER OBJECTIONABLE MATERIAL WITHIN THE LAGOON FOOTPRINT. ALL GRUBBED MATERIAL SHALL BE DISPOSED OF IN THE DESIGNATED SPOILS DEPOSITION AREA WITHIN THE PROJECT PROPERTY. THE GRUBBED ORGANIC TOPSOIL SHALL BE LATER USED TO COVER AND REVEGETATE THE DIKE SIDE SLOPES.

D. EARTHWORK:

1. SIDE WALLS OF EXCAVATIONS SHALL BE SLOPED OR SUFFICIENTLY BRACED IN CONFORMANCE WITH SECTION 05.160 OF THE STATE OF ALASKA DEPARTMENT OF LABOR STANDARDS AND THE LATEST FEDERAL OSHA EXCAVATION AND TRENCHING STANDARDS. IF IT IS NECESSARY TO LEAVE AN OPEN EXCAVATION UNATTENDED, THE OPEN EXCAVATION SHALL BE ADEQUATELY SIGNED AND BARRICADED TO WARN RESIDENTS OF THE HAZARD.

2. COMPACTION OF STRUCTURAL FOUNDATIONS, PIPE ZONE MATERIALS, EMBANKMENTS AND ROADWAYS SHALL BE ACCOMPLISHED USING A MINIMUM OF THREE (3) PASSES WITH A 15,000 POUND VIBRATORY DRUM COMPACTOR. EMBANKMENT FILL SHALL BE COMPACTED IN MAXIMUM 8-INCH LIFTS PRIOR TO SUBSEQUENT PLACEMENT OF FILL . SUPERINTENDENT SHALL COORDINATE AN INITIAL EFFORT INSPECTION WITH THE ENGINEER AND VSW TO VERIFY THE ACTUAL COMPACTIVE EFFORT REQUIRED. IF LIGHTER EQUIPMENT IS SUBSTITUTED THE LIFT DEPTH AND NUMBER OF PASSES SHALL BE ADJUSTED TO OBTAIN THE SAME COMPACTIVE EFFORT.

3. WHERE EXCAVATIONS ENCOUNTER GROUNDWATER, DEWATERING SHALL BE IMPLEMENTED AND TEMPORARY SHORING MAY BE REQUIRED TO STABILIZE THE WALLS WHILE EXCESS WATER IS ALLOWED TO DRAIN OR PUMPED OUT OF THE EXCAVATION.

E. REVEGETATION SPECIFICATION:

1. THE ENTIRE AREA DISTURBED BY CONSTRUCTION SHALL BE REVEGETATED AS QUICKLY AS GOOD CONSTRUCTION PRACTICE ALLOWS. AREAS TO BE REVEGETATED SHALL FIRST BE COVERED WITH A MINIMUM 6-INCH LAYER OF FRIABLE, LOOSELY PLACED TOPSOIL, FREE OF DEBRIS. THE FOLLOWING SEED MIXTURE AND FERTILIZER APPLICATION RATES SHALL BE APPLIED:

SEED	NAME/TYPE	RATE	METHOD
RED FESCUE	ARCTARED	14 LBS/ACRE	BROADCAST
BERING HAIRGRASS	NORCOAST	16 LBS/ACRE	BROADCAST
RYE GRASS	ANNUAL	2 LBS/ACRE	BROADCAST
FERTILIZER	20-20-20	180 LBS/ACRE	BROADCAST

2. EROSION CONTROL FABRIC:
USE BIODEGRADABLE JUTE MESH WITH A LIFE OF 1-2 YEARS. INSTALL ON SLOPES AFTER SEEDING AND ANCHOR SECURELY WITH GROUND STAPLES.

F. PIPELINE TESTING:

1. GENERAL:
ALL TESTING SHALL BE IN CONFORMANCE WITH THE FOLLOWING REQUIREMENTS:
ALL TESTS SHALL BE WITNESSED BY A REPRESENTATIVE DESIGNATED BY THE COMMUNITY. UPON SUCCESSFUL COMPLETION OF A TEST THE RESULTS OF THE TEST SHALL BE DOCUMENTED ON A TEST FORM AND ACKNOWLEDGED BY SIGNATURE OF THE COMMUNITY'S REPRESENTATIVE WITNESSING THE TEST AND BY THE PROJECT SUPERINTENDENT. THE SUPERINTENDENT'S RED LINED AS-BUILT DRAWINGS SHALL ALSO NOTE THE TIME AND DATE OF THE TEST, AS WELL AS THE NAME OF THE COMMUNITY'S WITNESS, FOR EACH PIPE SEGMENT TESTED.

2. FORCEMAIN TESTING:
PERFORM HYDROSTATIC TESTING OF ALL FORCEMAIN PIPING. FILL THE LINES WITH POTABLE WATER AND REMOVE AIR POCKETS PRIOR TO STARTING THE TEST. PRESSURIZE TO 100 PSI AND LEAVE FOR A MINIMUM OF 1 HOUR. AFTER THIS INITIAL PERIOD, ADD WATER TO BRING THE PRESSURE UP TO 100 PSI AND BEGIN A ONE HOUR TEST. THERE SHALL BE NO LOSS IN PRESSURE DURING THE 1 HOUR TEST FOR THE PIPING TO BE ACCEPTED.

3. GRAVITY SEWER MAIN TESTING:
THE CONSTRUCTION CREW SHALL CLEAN AND FLUSH ALL SANITARY SEWER MAINS PRIOR TO VISUAL INSPECTION (LAMPING) AND PRESSURE TESTING. EACH REACH OF SEWER MAIN SHALL BE LAMPED, MANHOLE TO MANHOLE, WITH A HIGH INTENSITY LIGHT AND LARGE MIRROR. SEGMENTS NOT LAMPING TO 7/8 OF A FULL MOON SHALL BE REALIGNED AND/OR REGRADED AS NECESSARY TO MEET THE 7/8 MOON REQUIREMENT.
ALL SEGMENTS OF COMPLETED SEWER MAIN AND OUTFALL SHALL BE PRESSURE TESTED FROM MANHOLE TO MANHOLE OR TERMINUS TO TERMINUS WITH AIR AT THE END OF CONSTRUCTION (PRIOR TO CONNECTING SEWER SERVICE LINES). AIR SHALL BE SLOWLY SUPPLIED TO THE PLUGGED PIPE INSTALLATION UNTIL THE INTERNAL AIR PRESSURE REACHES 4.0 POUNDS PER SQUARE INCH (PSI) GREATER THAN THE AVERAGE BACK PRESSURE OF ANY GROUNDWATER THAT MAY SUBMERGE THE PIPE. AT LEAST TWO (2) MINUTES SHALL BE ALLOWED FOR TEMPERATURE STABILIZATION BEFORE PROCEEDING WITH THE TEST. AT THE END OF THE STABILIZATION PERIOD THE AIR PRESSURE SHALL BE ADJUSTED TO THE TEST PRESSURE AND THE 10 MINUTE TEST PERIOD SHALL BEGIN.
THE MAXIMUM ALLOWABLE PRESSURE DROP FOR ANY SEWER MAIN SEGMENT DURING THE 10 MINUTE TEST PERIOD SHALL BE 2.7 PSI.

4. GLYCOL HEAT TRACE TESTING - PERFORM HYDROSTATIC TESTING OF GLYCOL HEAT TRACE. HYDROSTATIC TESTS SHALL BE PERFORMED AFTER INSTALLATION. FILL THE LINE WITH WATER AND REMOVE AIR PRIOR TO STARTING THE TEST. PRESSURIZE TO 1.5 X OPERATING PRESSURE (80 PSI) = 120 PSI AND LEAVE FOR A MINIMUM OF 1-HOUR. AFTER THIS INITIAL PERIOD, ADD WATER TO BRING THE PRESSURE UP TO 120 PSI AND BEGIN A 4-HOUR TEST. FOR THE GLYCOL LOOP TO BE ACCEPTED THERE SHOULD BE NO LOSS IN PRESSURE. NO VISIBLE LEAKS SHOULD BE NOTED UPON A VISUAL INSPECTION OF EACH JOINT UNDER PRESSURE.

G: GEOTEXTILE AND GEOMEMBRANE:

1. GEOTEXTILE FABRIC FOR USE IN LAGOON DIKE "BURRITO WRAPS" SHALL BE NONWOVEN NEEDLE PUNCHED POLYPROPYLENE (PERMEATEX 4100 OR EQUAL)

2. GEOMEMBRANE LINER SHALL BE 45 MIL FLEXIBLE REINFORCED POLYPROPYLENE (NORTHWEST LININGS RPP45 OR EQUAL)

RECORD DRAWING CERTIFICATE
THESE DRAWINGS REFLECT RECORDED INFORMATION OBTAINED DURING CONSTRUCTION. INFORMATION PROVIDED HEREIN IS ACCURATE TO THE BEST OF MY KNOWLEDGE.
NAME DATE

SCALE: AS SHOWN
BAR IS ONE INCH ON ORIGINAL DRAWING 0 1"
IF NOT ONE INCH ON THIS SHEET, ADJUST SCALES ACCORDINGLY

CONSTRUCTION RECORD
FIELD BOOK
STAKING
FOREMAN
AS-BUILT
INSPECTOR

STATE OF ALASKA 49TH Michael R. Eidman No.6352 REGISTERED PROFESSIONAL ENGINEER

FACULTATIVE LAGOON
GENERAL NOTES
CHEFORNAK, ALASKA

CE2 ENGINEERS, INC.
PO BOX 232948 ANCHORAGE, AK 99523 PH: 907-349-1010 FAX: 907-349-1015

REVISION	BY	DATE
REVISED PER 65% COMMENTS	CM	1/2014

Project No. ____
Date JAN. 2014
Designed MRE
Drawn LAW
Approved MRE

Sheet No. G1.0

G:\ACAD\CHEFORNAK\CYF1101 Sewage Lagoon\G1.0 GENERAL NOTES LEGEND.dwg, 1/15/2014 4:16:40 PM, cmerz, \\Ce2main\LANIER MP C2050/LD520C PCL 6

LEGEND

EXISTING (PLAN VIEW / PROFILE VIEW)	PROPOSED (PLAN VIEW / PROFILE VIEW)	DESCRIPTION
		GROUND SURFACE
		DRAINAGE/WATER FEATURE
FM	FM	SEWER FORCE MAIN, LIFT STATION, REDUCER, AND DOUBLE WYE CLEANOUT
SS	SS	SEWER SERVICE LINE
		CULVERT
E		BURIED ELECTRICAL LINE
FO		BURIED FUEL OIL LINE
T		BURIED TELEPHONE LINE
E		OVERHEAD ELECTRIC
		EASEMENT
		UTILITY POLE
		FENCE
		ROADS AND TRAVELED WAYS
24	24	CONTOUR LINE
		R.O.W. (RIGHT- OF- WAY)
		SHORELINE
		TREES AND/OR BRUSH
MAJOR / MINOR		STRUCTURE
		GROUND PROFILE
		DIRECTION OF DRAINAGE
		PROPERTY LINE
		SECTION LINE
		BLM BRASS CAPPED MONUMENT
	ELEV 32.0'	BENCH MARK
24.5		SPOT ELEVATION
	#1012	REBAR - ABILITY SURVEY POINT NO.
		YELLOW PLASTIC CAP (REBAR)
TRACT 3		TRACT NUMBER
LOT 8		LOT NUMBER
	△	HEAT TRACE POWER SUPPLY

SECTION AND DETAIL DESIGNATIONS

SECTION LETTER

B / C3.5 — SECTION — NTS

SHEET ON WHICH SECTION IS SHOWN

DETAIL NUMBER

1 / C3.5 — DETAIL — NTS

SHEET ON WHICH DETAIL IS SHOWN

ABBREVIATIONS

A.P.	ANGLE POINT (HORIZONTAL)
ADEC	ALASKA DEPT. OF ENVIRONMENTAL CONSERVATION
CMP	CORRUGATED METAL PIPE
C.O.E.	CORPS OF ENGINEERS
CULV.	CULVERT
FF	FINISHED FLOOR ELEVATION
G.B.	GRADE BREAK (VERTICAL)
G.V.	GATE VALVE
HDPE	HIGH DENSITY POLYETHYLENE PIPE
INV.	INVERT
IPS	IRON PIPE SIZE (INDUSTRY STANDARD OUTSIDE PIPE DIAMETER)
LF	LINEAR FEET
MFR	MANUFACTURER
MH	MANHOLE
SDR	SIDE DIMENSION RATIO
SHT.	SHEET
SS	STAINLESS STEEL
STA.	STATION
TOJ	TOP OF PIPE JACKET
V.B.	VALVE BOX
WS	WATER SURFACE

WORK SUMMARY

CONSTRUCT A THREE-CELL WASTEWATER TREATMENT LAGOON AND ASSOCIATED HYDRAULIC CONTROL FEATURES.

INSTALL APPROXIMATELY 2100 LF OF FORCEMAIN FROM THE EXISTING SCHOOL TUNDRA POND TO THE PROPOSED FACULTATIVE LAGOON SITE.

INSTALL A HYDRONIC HEAT TRACE AND WASTE HEAT RECOVERY SYSTEM TO PROVIDE FREEZE PROTECTION OF THE LAGOON FORCEMAIN AND HONEYBUCKET DUMPING STATION.

CONSTRUCTION SCHEDULE

THE SOILS AT THE PROPOSED LAGOON SITE ARE COMPOSED PRIMARILY OF ORGANIC AND INORGANIC SILTS. A SUCCESSFUL PROJECT WILL REQUIRE CAREFUL PLANNING TO SEQUENCE THE WORK IN A MANNER THAT BEST UTILIZES LOCAL INORGANIC SILTS. THE ANTICIPATED CONSTRUCTION SEQUENCING AND SCHEDULING IS AS FOLLOWS:

WINTER 2013-2014: INITIAL STRIPPING OF ORGANICS IS DONE IN LATE WINTER. INORGANIC SILTS ARE EXCAVATED AND STOCKPILED IN WINDROWS IN ORDER TO ALLOW FOR FROZEN MOISTURE TO THAW AND TO DRAIN OUT.

SPRING/SUMMER 2014: MATERIALS FOR FORCE MAIN AND LAGOON ARE PROCURED AND SHIPPED BY BARGE TO CHEFORNAK.

FALL/WINTER 2014-2015: FORCE MAIN IS CONSTRUCTED AS SOON AS CONDITIONS ARE ACCEPTABLE TO WORK ON THE TUNDRA. CONSTRUCTION OF DIKES WILL COMMENCE WITH UNFROZEN SILT. BURRITO WRAPS OF SILT WILL BE CONSTRUCTED TO FORM THE DIKES. ADDITIONAL COVERING OF THE BURRITO WRAPS WILL TAKE PLACE, WITH ORGANICS ON THE OUTSIDE OF THE DIKES AND SILT OVER THE WRAPS ON THE INSIDE OF THE DIKES.

SYSTEM STARTUP

FORCEMAIN AND LAGOON STARTUP WILL OCCUR AFTER LIFT STATION AT NEW WASHETERIA IS COMPLETED.

STORM WATER MANAGEMENT PLAN

CONSTRUCTION SHALL BE PLANNED AND EXECUTED TO EXPEDITIOUSLY COMPLETE THE PROJECT WHILE MAINTAINING THE CONSTRUCTION SITE IN A MANNER THAT REDUCES THE POTENTIAL FOR CONTAMINATED STORM RUNOFF. SPECIFIC STEPS ARE TO INCLUDE THE FOLLOWING:

- PRIOR TO CONSTRUCTION DEVELOP A STORMWATER POLLUTION PREVENTION PLAN (SWPPP), WHICH UTILIZES THE BEST MANAGEMENT PRACTICES (BMPS) AND IS IN COMPLIANCE WITH THE NATIONAL POLLUTANT DISCHARGE ELIMINATION SYSTEM (NPDES) AND THE ALASKA CONSTRUCTION GENERAL PERMIT NO. AKR10000. THIS PLAN MUST BE APPROVED BY THE STATE OF ALASKA ADEC.
- FILE A NOTICE OF INTENT (NOI) WITH THE EPA A MINIMUM OF 7-DAYS PRIOR TO THE START OF CONSTRUCTION.
- CONSTRUCTOR SHALL BE VIGILANT WITH IMPLEMENTATION OF THE PLAN.

RECORD DRAWING CERTIFICATE

THESE DRAWINGS REFLECT RECORDED INFORMATION OBTAINED DURING CONSTRUCTION. INFORMATION PROVIDED HEREIN IS ACCURATE TO THE BEST OF MY KNOWLEDGE.

NAME DATE

SCALE: AS SHOWN

BAR IS ONE INCH ON ORIGINAL DRAWING 0 1"

IF NOT ONE INCH ON THIS SHEET, ADJUST SCALE ACCORDINGLY

CONSTRUCTION RECORD

FIELD BOOK

STAKING

FOREMAN

AS-BUILT

INSPECTOR

STATE OF ALASKA 49TH Michael R. Eotman No.6252 REGISTERED PROFESSIONAL ENGINEER

FACULTATIVE LAGOON

LEGEND AND WORK SUMMARY

CHEFORNAK, ALASKA

CE2 ENGINEERS, INC.

PO BOX 230246 ANCHORAGE, AK 99523 PH: 907-349-1015 FAX: 907-349-1015

REVISION	BY	DATE
REVISED PER 65% COMMENTS	CM	1/2014

Project No. ____ Date JAN. 2014 Designed LAP Drawn DDR Approved LAP

Sheet No. G1.1

G:\ACAD\CHEFORNAK\CYF1101 Sewage Lagoon\G1.1PROJECT DESCRIPTION LEGEND.dwg, 1/15/2014 4:20:08 PM, cmerz, \\Ce2main\LANIER MP C2050/LD520C PCL 6

G:\ACAD\CHEFORNAK\CYF1101 Sewage Lagoon\G1.2 VICINITY MAP.dwg, 1/15/2014 4:22:21 PM, cmerz, \\Ce2main\LANIER MP C2050/LD520C PCL 6

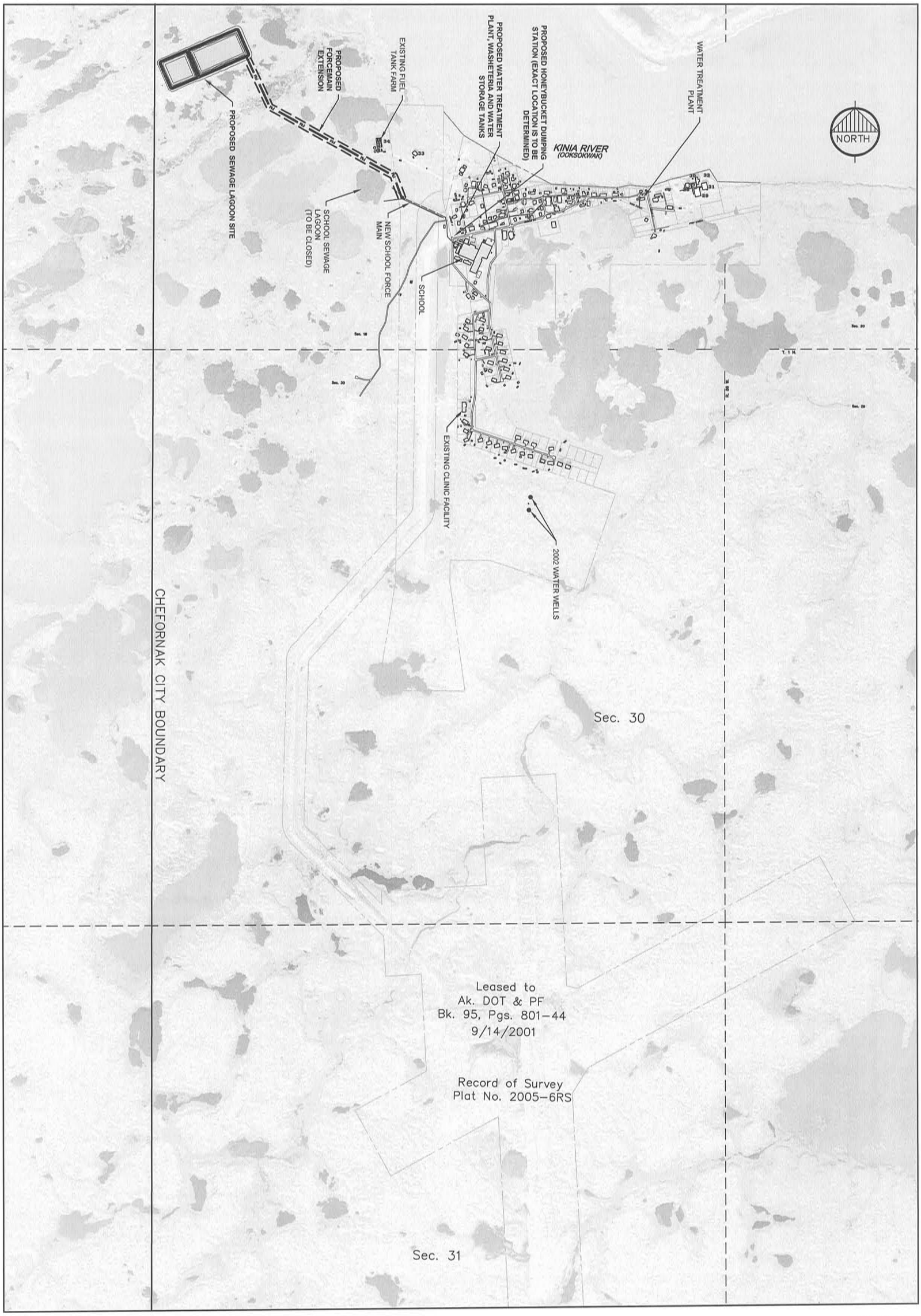

Sheet No.	Project No.	Date	Designed	Drawn	Approved
G1.2		JAN. 2014	MRE	CM	MRE

REVISION	BY	DATE
REVISED PER 65% COMMENTS	CM	1/2014

CE2 ENGINEERS, INC.
PO BOX 232948 ANCHORAGE, AK 99523 PH: 907-349-1010 FAX: 907-349-1015

FACULTATIVE LAGOON

VICINITY MAP

CHEFORNAK, ALASKA

STATE OF ALASKA 49TH Michael R. Erdman No.6252 REGISTERED PROFESSIONAL ENGINEER

CONSTRUCTION RECORD
FIELD BOOK
STAKING
FOREMAN
AS-BUILT
INSPECTOR

SCALE: AS SHOWN

BAR IS ONE INCH ON ORIGINAL DRAWING

0 1"

IF NOT ONE INCH ON THIS SHEET, ADJUST SCALES ACCORDINGLY

RECORD DRAWING CERTIFICATE

THESE DRAWINGS REFLECT RECORDED INFORMATION OBTAINED DURING CONSTRUCTION. INFORMATION PROVIDED HEREIN IS ACCURATE TO THE BEST OF MY KNOWLEDGE.

NAME DATE

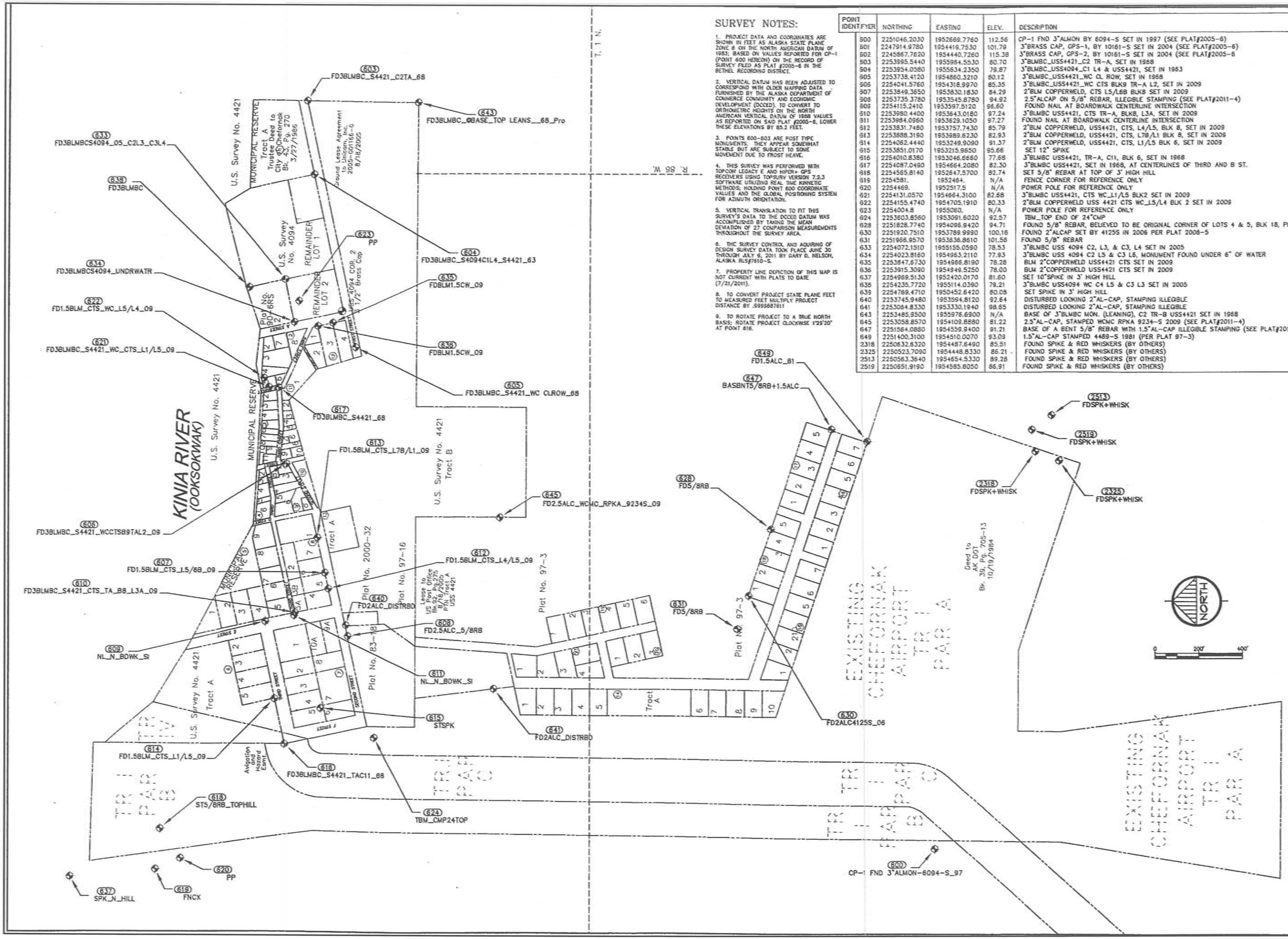

SURVEY NOTES:

1. PROJECT DATA AND COORDINATES ARE SHOWN IN FEET AS ALASKA STATE PLANE ZONE 8 ON THE NORTH AMERICAN DATUM OF 1983; BASED ON VALUES REPORTED FOR CP-1 (POINT 600 HEREON) ON THE RECORD OF SURVEY FILED AS PLAT #2005-6 IN THE BETHEL RECORDING DISTRICT.

2. VERTICAL DATUM HAS BEEN ADJUSTED TO CORRESPOND WITH OLDER MAPPING DATA FURNISHED BY THE ALASKA DEPARTMENT OF COMMERCE COMMUNITY AND ECONOMIC DEVELOPMENT (DCCED). TO CONVERT TO ORTHOMETRIC HEIGHTS ON THE NORTH AMERICAN VERTICAL DATUM OF 1988 VALUES AS REPORTED ON SAID PLAT #2005-6, LOWER THESE ELEVATIONS BY 85.2 FEET.

3. POINTS 600-603 ARE POST TYPE MONUMENTS. THEY APPEAR SOMEWHAT STABLE BUT ARE SUBJECT TO SOME MOVEMENT DUE TO FROST HEAVE.

4. THIS SURVEY WAS PERFORMED WITH TOPCON LEGACY E AND HIPER+ GPS RECEIVERS USING TOPSURV VERSION 7.2.3 SOFTWARE UTILIZING REAL TIME KINNETIC METHODS; HOLDING POINT 600 COORDINATE VALUES AND THE GLOBAL POSITIONING SYSTEM FOR AZIMUTH ORIENTATION.

5. VERTICAL TRANSLATION TO FIT THIS SURVEY'S DATA TO THE DCCED DATUM WAS ACCOMPLISHED BY TAKING THE MEAN DEVIATION OF 27 COMPARISON MEASUREMENTS THROUGHOUT THE SURVEY AREA.

6. THE SURVEY CONTROL AND AQUIRING OF DESIGN SURVEY DATA TOOK PLACE JUNE 30 THROUGH JULY 6, 2011 BY GARY D. NELSON, ALASKA RLS#7610-S.

7. PROPERTY LINE DEFICTION OF THIS MAP IS NOT CURRENT WITH PLATS TO DATE (7/21/2011).

8. TO CONVERT PROJECT STATE PLANE FEET TO MEASURED FEET MULTIPLY PROJECT DISTANCE BY .9999887611

9. TO ROTATE PROJECT TO A TRUE NORTH BASIS; ROTATE PROJECT CLOCKWISE 1°29'20" AT POINT 616.

POINT IDENTIFYER	NORTHING	EASTING	ELEV.	DESCRIPTION
600	2251046.2030	1952669.7760	112.56	CP-1 FND 3"ALMON BY 6094-S SET IN 1997 (SEE PLAT#2005-6)
601	2247914.9780	1954419.7530	101.79	3"BRASS CAP, GPS-1, BY 10161-S SET IN 2004 (SEE PLAT#2005-6)
602	2245867.7620	1954440.7260	115.38	3"BRASS CAP, GPS-2, BY 10161-S SET IN 2004 (SEE PLAT#2005-6
603	2253995.5440	1955984.5530	80.70	3"BLMBC_USS4421_C2 TR-A, SET IN 1968
604	2253954.0580	1955634.2350	79.87	3"BLMBC_USS4094_C1 L4 & USS4421, SET IN 1953
605	2253738.4120	1954860.3210	80.12	3"BLMBC_USS4421_WC CL ROW, SET IN 1968
606	2254041.5760	1954316.9970	85.35	3"BLMBC_USS4421_WC CTS BLK9 TR-A L2, SET IN 2009
607	2253849.3650	1953830.1830	84.29	2"BLM COPPERWELD, CTS L5/L6B BLK8 SET IN 2009
608	2253735.3780	1953545.8780	94.92	2.5"ALCAP ON 5/8" REBAR, ILLEGIBLE STAMPING (SEE PLAT#2011-4)
609	2254115.2410	1953597.5120	96.60	FOUND NAIL AT BOARDWALK CENTERLINE INTERSECTION
610	2253980.4400	1953643.0180	97.24	3"BLMBC USS4421, CTS TR-A, BLK8, L3A, SET IN 2009
611	2253984.0960	1953829.1050	97.27	FOUND NAIL AT BOARDWALK CENTERLINE INTERSECTION
612	2253831.7480	1953757.7430	85.79	2"BLM COPPERWELD, USS4421, CTS, L4/L5, BLK 8, SET IN 2009
613	2253888.3190	1953989.6230	82.93	2"BLM COPPERWELD, USS4421, CTS, L7B/L1 BLK 8, SET IN 2009
614	2254062.4440	1953249.9090	91.37	2"BLM COPPERWELD, USS4421, CTS, L1/L5 BLK 6, SET IN 2009
615	2253851.0170	1953215.9550	95.66	SET 12" SPIKE
616	2254010.8380	1953046.6660	77.68	3"BLMBC USS4421, TR-A, C11, BLK 6, SET IN 1968
617	2254087.0490	1954664.2080	82.30	3"BLMBC USS4421, SET IN 1968, AT CENTERLINES OF THIRD AND B ST.
618	2254565.8140	1952647.5700	82.74	SET 5/8" REBAR AT TOP OF 3' HIGH HILL
619	2254581.	1952464.	N/A	FENCE CORNER FOR REFERENCE ONLY
620	2254469.	1952517.5	N/A	POWER POLE FOR REFERENCE ONLY
621	2254131.0570	1954664.3100	82.68	3"BLMBC USS4421, CTS WC_L1/L5 BLK2 SET IN 2009
622	2254155.4740	1954705.1910	80.33	2"BLM COPPERWELD USS 4421 CTS WC_L5/L4 BLK 2 SET IN 2009
623	2254004.8	1955060.	N/A	POWER POLE FOR REFERENCE ONLY
624	2253603.6560	1953091.6020	92.57	TBM_TOP END OF 24"CMP
628	2251828.7740	1954098.9420	94.71	FOUND 5/8" REBAR, BELIEVED TO BE ORIGINAL CORNER OF LOTS 4 & 5, BLK 18, PLAT 97-3
630	2251920.7510	1953789.9990	100.16	FOUND 2"ALCAP SET BY 4125S IN 2006 PER PLAT 2008-5
631	2251966.9570	1953836.8610	101.56	FOUND 5/8" REBAR
633	2254072.1510	1955155.0590	78.53	3"BLMBC USS 4094 C2, L3, & C3, L4 SET IN 2005
634	2254023.8160	1954963.2110	77.93	3"BLMBC USS 4094 C2 L5 & C3 L6, MONUMENT FOUND UNDER 6" OF WATER
635	2253847.6730	1954966.8190	78.28	BLM 2"COPPERWELD USS4421 CTS SET IN 2009
636	2253915.3090	1954949.5250	78.00	BLM 2"COPPERWELD USS4421 CTS SET IN 2009
637	2254969.5130	1952420.0170	81.60	SET 10"SPIKE IN 3' HIGH HILL
638	2254235.7720	1955114.0390	79.21	3"BLMBC USS4094 WC C4 L5 & C3 L3 SET IN 2005
639	2254769.4710	1950452.6420	80.08	SET SPIKE IN 3' HIGH HILL
640	2253745.9480	1953594.8120	92.64	DISTURBED LOOKING 2"AL-CAP, STAMPING ILLEGIBLE
641	2253084.8330	1953330.1940	98.65	DISTURBED LOOKING 2"AL-CAP, STAMPING ILLEGIBLE
643	2253485.9500	1955976.6900	N/A	BASE OF 3"BLMBC MON. (LEANING), C2 TR-B USS4421 SET IN 1968
645	2253058.8570	1954109.6880	81.22	2.5"AL-CAP, STAMPED WCMC RPKA 9234-S 2009 (SEE PLAT#2011-4)
647	2251564.0860	1954559.9400	91.21	BASE OF A BENT 5/8" REBAR WITH 1.5"AL-CAP ILLEGIBLE STAMPING (SEE PLAT#2011-4)
649	2251400.3100	1954510.0070	93.09	1.5"AL-CAP STAMPED 4489-S 1981 (PER PLAT 97-3)
2318	2250632.6320	1954487.6490	85.51	FOUND SPIKE & RED WHISKERS (BY OTHERS)
2325	2250523.7090	1954448.8330	86.21	FOUND SPIKE & RED WHISKERS (BY OTHERS)
2513	2250563.3640	1954654.5330	89.28	FOUND SPIKE & RED WHISKERS (BY OTHERS)
2519	2250651.9190	1954585.8050	86.91	FOUND SPIKE & RED WHISKERS (BY OTHERS)

RECORD DRAWING CERTIFICATE
THESE DRAWINGS REFLECT RECORDED INFORMATION OBTAINED DURING CONSTRUCTION. INFORMATION PROVIDED HEREIN IS ACCURATE TO THE BEST OF MY KNOWLEDGE.
NAME DATE

SCALE: AS SHOWN
BAR IS ONE INCH ON ORIGINAL DRAWING 0 1"
IF NOT ONE INCH ON THIS SHEET, ADJUST SCALES ACCORDINGLY

CONSTRUCTION RECORD
FIELD BOOK
STAKING
FOREMAN
AS-BUILT
INSPECTOR

STATE OF ALASKA 49TH GARY D. NELSON LS 7610 9-5-11

SURVEY CONTROL
CHEFORNAK, ALASKA

CE2 ENGINEERS, INC.
PO BOX 223948 ANCHORAGE, AK 99523 PH: 907-349-1010 FAX: 907-349-1015

REVISION	BY	DATE

Project No. ____
Date ____
Designed ____ CM
Drawn ____ GN
Approved ____

Sheet No.
G2.1

G:\ACAD\CHEFORNAK\CYF1101 Sewage Lagoon\G2.1 SURVEY CONTROL.dwg, 11/6/2013 2:02:56 PM, cmerz, \\Ce2main\LANIER MP C2050/LD520C PCL 6

RECORD OF BOREHOLE TP-1

SHEET 1 of 1

PROJECT: CE2 Chefornak Lagoon
PROJECT NUMBER: 113-95619
LOCATION: Chefornak, AK

CLIENT: CE2
DRILLING DATE: 4/1/2011
EQUIPMENT: Excavator- Hitachi EX 300

DATUM: WGS 84
ELEVATION: n/a
COORDS: 60.16167° N 164.29778° W

BORING METHOD: Bucket

DEPTH (ft)	SOIL PROFILE – DESCRIPTION	ICE BOND	USCS	GRAPHIC LOG	ELEV. / DEPTH (ft)	SAMPLES – NUMBER	TYPE	BLOWS PER FT	REC ATT (inch)	UNCORRECTED BLOWS / FT (10 20 30 40)	SALINITY (ppt) Δ / WATER CONTENT (PERCENT) w_p ⊢ w ⊣ w_l (10 20 30 40)	NOTES TESTS WATER LEVELS GRAPHIC
0	0.0 - 2.0 Frozen, light brown, fibrous PEAT, well bonded with approximately 40-50% visible ice by volume as individual ice crystals (PT, Vx)		PT			1	GS		6/6		149	
	2.0 - 3.0 Frozen, brown, ORGANIC SILT, well bonded with approximately 5-10% visible ice by volume as coatings on particles (OL, Vc)		OL		2.0							
	3.0 - 8.0 Frozen, gray, SILT, well bonded with approximately 5-10% visible ice by volume, grading to poorly bonded with no visible ice, trace organic material (ML, Vc to NI)		ML		3.0	2	GS		6/6	Δ	24	
5						3	GS		6/6			Backfilled with excavated materials
	8.0 - 12.0 Dark gray to gray, SILT, low plasticity, trace organic material (ML)		ML		8.0	4	GS		6/6		57	Gravel = 0%, Sand = 4%, P200 = 95.9%
10	12.0 - 15.0 Frozen, dark gray, SILT, poorly bonded friable (ML, NI)		ML		12.0	5	GS		6/6			
						6	GS		6/6	Δ		
15	Borehole completed at 15.0 ft.											
20												

Notes:
1) Test pit backfilled with excavated materials
2) No groundwater observed

Golder Associates

DEPTH SCALE: 1 inch to 2.5 feet
DRILLING CONTRACTOR: CE2
DRILLER: Evan

LOGGED: J. Randazzo
CHECKED: D. Willman
CHECK DATE: 5/17/2011

Figure 4

RECORD OF BOREHOLE TP-2

SHEET 1 of 1

PROJECT: CE2 Chefornak Lagoon
PROJECT NUMBER: 113-95619
LOCATION: Chefornak, AK

CLIENT: CE2
DRILLING DATE: 4/1/2011
EQUIPMENT: Excavator- Hitachi EX 300

DATUM: WGS 84
ELEVATION: n/a
COORDS: 60.16253° N 164.29778° W

BORING METHOD: Bucket

DEPTH (ft)	SOIL PROFILE – DESCRIPTION	ICE BOND	USCS	GRAPHIC LOG	ELEV. / DEPTH (ft)	SAMPLES – NUMBER	TYPE	BLOWS PER FT	REC ATT (inch)	UNCORRECTED BLOWS / FT (10 20 30 40)	SALINITY (ppt) Δ / WATER CONTENT (PERCENT) w_p ⊢ w ⊣ w_l (10 20 30 40)	NOTES TESTS WATER LEVELS GRAPHIC
0	0.0 - 1.0 Frozen, light brown, fibrous PEAT, well bonded with approximately 40-50% visible ice by volume as individual ice crystals (PT, Vx)		PT									
	1.0 - 2.0 Frozen, brown, ORGANIC SILT, well bonded no excess ice (OL, Nbn)		OL		1.0	1	GS		6/6		100	
	2.0 - 13.0 Frozen, gray, SILT, well bonded to 9.5 feet, approximately 10-15% visible ice by volume as coatings on particles, some organic material (ML, Vc to NI)		ML		2.0	2	GS		6/6	Δ	32	
5												1 inch PVC
10	Poorly bonded at 9.5 feet					3	GS		6/6	Δ	6	
15	Borehole completed at 13.0 ft.											
20												

Notes:
1) Test pit backfilled with excavated materials
2) Closed-end 1 inch schedule 80 PVC installed to 13 feet, with 2 feet of stickup above grade
3) No groundwater observed

Golder Associates

DEPTH SCALE: 1 inch to 2.5 feet
DRILLING CONTRACTOR: CE2
DRILLER: Evan

LOGGED: J. Randazzo
CHECKED: D. Willman
CHECK DATE: 5/17/2011

Figure 5

RECORD DRAWING CERTIFICATE
THESE DRAWINGS REFLECT RECORDED INFORMATION OBTAINED DURING CONSTRUCTION. INFORMATION PROVIDED HEREIN IS ACCURATE TO THE BEST OF MY KNOWLEDGE.
NAME
DATE

SCALE:
BAR IS ONE INCH ON ORIGINAL DRAWING
0 1"
IF NOT ONE INCH ON THIS SHEET ADJUST SCALES ACCORDINGLY

CONSTRUCTION RECORD
FIELD BOOK
STAKING
FOREMAN
AS-BUILT
INSPECTOR

STATE OF ALASKA 49TH REGISTERED PROFESSIONAL ENGINEER Michael R. Erdman No.6252

FACULTATIVE LAGOON
TEST HOLE BORING LOGS
CHEFORNAK, ALASKA

CE2 ENGINEERS, INC.
PO BOX 230946 ANCHORAGE, AK 99523 PH: 907-349-1010 FAX: 907-349-1015

REVISION	BY	DATE
REVISED PER 60% COMMENTS	CM	1/2014

Project No. ____
Date JAN. 2014
Designed MRE
Drawn CM
Approved MRE

Sheet No.
G3.1

G:\ACAD\CHEFORNAK\CYF1101 Sewage Lagoon\G3.1 TO G3.2.dwg, 1/15/2014 4:26:11 PM, cmerz, \\Ce2main\LANIER MP C2050/LD520C PCL 6
CE2 CHEFORNAK LAGOON.GPJ LIBRARY-ANC(7-13-11).GLB [ANC BOREHOLE] DFreese 7/19/11

RECORD OF BOREHOLE TP-3

SHEET 1 of 1

PROJECT: CE2 Chefornak Lagoon
PROJECT NUMBER: 113-95619
LOCATION: Chefornak, AK

CLIENT: CE2
DRILLING DATE: 4/2/2011
EQUIPMENT: Excavator- Hitachi EX 300

DATUM: WGS 84
ELEVATION: n/a
COORDS: 60.16222° N 164.29689° W

BORING METHOD: Bucket

DEPTH (ft)	DESCRIPTION	ICE BOND	USCS	ELEV. / DEPTH (ft)	NUMBER	TYPE	BLOWS PER FT	REC / ATT (inch)	UNCORRECTED BLOWS / FT (10 20 30 40)	SALINITY (ppt) △ / WATER CONTENT (PERCENT) W_p W W_l (10 20 30 40)	NOTES TESTS WATER LEVELS GRAPHIC
0	0.0 - 1.0 Frozen, light brown, fibrous PEAT, well bonded with approximately 40-50% visible ice by volume as individual ice crystals (PT, Vx)		PT								
	1.0 - 3.0 Frozen, brown, ORGANIC SILT, well bonded with approximately 5-10% visible ice by volume as coatings on particles (OL, Vc)		OL	1.0	1	GS		6/6		648	
	3.0 - 6.0 Dark gray, SILT, well bonded becoming friable below 5 feet, approximately 10% visible ice by volume (ML, Vc to Nbn)		ML	3.0	2	GS		6/6		64	
5	6.0 - 8.0 Moist, dark gray, elastic SILT, medium plasticity (MH)		MH	6.0	3	GS		6/6	△	158	1 inch PVC
	8.0 - 16.0 Gray, SILT, trace sand layers observed below 15 feet (ML)		ML	8.0	4	GS		6/6		○	Gravel = 0%,0 ft, Sand = 6%, WD P200 = 93.7%
10											
15					5	GS		6/6	△	○	
20	Borehole completed at 16.0 ft.										

Notes:
1) Test pit backfilled with excavated materials
2) Groundwater seepage observed at 10 feet during excavation
3) Closed-end 1 inch schedule 80 PVC installed to 15 feet, with 5 feet of stick up above grade

Golder Associates

DEPTH SCALE: 1 inch to 2.5 feet
DRILLING CONTRACTOR: CE2
DRILLER: Evan

LOGGED: J. Randazzo
CHECKED: D. Willman
CHECK DATE: 5/17/2011

Figure 6

RECORD OF BOREHOLE TP-4

SHEET 1 of 1

PROJECT: CE2 Chefornak Lagoon
PROJECT NUMBER: 113-95619
LOCATION: Chefornak, AK

CLIENT: CE2
DRILLING DATE: 4/2/2011
EQUIPMENT: Excavator- Hitachi EX 300

DATUM: WGS 84
ELEVATION: n/a
COORDS: 60.16314° N 164.29500° W

BORING METHOD: Bucket

DEPTH (ft)	DESCRIPTION	ICE BOND	USCS	ELEV. / DEPTH (ft)	NUMBER	TYPE	BLOWS PER FT	REC / ATT (inch)	UNCORRECTED BLOWS / FT (10 20 30 40)	SALINITY (ppt) △ / WATER CONTENT (PERCENT) W_p W W_l (10 20 30 40)	NOTES TESTS WATER LEVELS GRAPHIC
0	0.0 - 1.0 Frozen, brown, fibrous PEAT, well bonded no excess ice (PT, Nbn)		PT								
	1.0 - 2.0 Frozen, brown, ORGANIC SILT, well bonded no excess ice (OL, Nbn)		OL	1.0	1	GS		6/6		222	
	2.0 - 5.0 Frozen, gray, SILT, well bonded to 4 feet, poorly bonded 4-5 feet, no visible ice, trace organic material (ML, Nbn)		ML	2.0	2	GS		6/6	△	73	Backfilled with excavated materials
5	5.0 - 7.0 Moist, black, ORGANIC SILT, mixed with peat (OL)		OL	5.0	3	GS		6/6		74	
	7.0 - 9.0 Moist, gray, SILT (ML)		ML	7.0							
10	9.0 - 18.0 Gray, SILT, few fine sand grading to sandy SILT, sand is fine (ML)		ML	9.0	4	GS		6/6		○	Gravel = 0%, Sand = 10%, P200 = 89.7%, MA
15					5	GS		6/6	△	○	Gravel = 0%, Sand = 33%, P200 = 65.7%
20	Borehole completed at 18.0 ft.										

Notes:
1) Test pit backfilled with excavated materials
2) No groundwater observed

Golder Associates

DEPTH SCALE: 1 inch to 2.5 feet
DRILLING CONTRACTOR: CE2
DRILLER: Evan

LOGGED: J. Randazzo
CHECKED: D. Willman
CHECK DATE: 5/17/2011

Figure 7

RECORD DRAWING CERTIFICATE
THESE DRAWINGS REFLECT RECORDED INFORMATION OBTAINED DURING CONSTRUCTION. INFORMATION PROVIDED HEREIN IS ACCURATE TO THE BEST OF MY KNOWLEDGE.
NAME DATE

SCALE:
BAR IS ONE INCH ON ORIGINAL DRAWING
0 1"
IF NOT ONE INCH ON THIS SHEET, ADJUST SCALES ACCORDINGLY

CONSTRUCTION RECORD
FIELD BOOK
STAKING
FOREMAN
AS-BUILT
INSPECTOR

STATE OF ALASKA 49TH REGISTERED PROFESSIONAL ENGINEER Michael R. Erdman No.6262

FACULTATIVE LAGOON
TEST HOLE BORING LOGS
CHEFORNAK, ALASKA

CE2 ENGINEERS, INC.
PO BOX 232048 ANCHORAGE, AK 99523 PH: 907-349-1019 FAX: 907-349-1015

REVISION	BY	DATE
REVISED PER 65% COMMENTS	CM	1/2014

Project No. ____
Date JAN. 2014
Designed MRE
Drawn CM
Approved MRE

Sheet No. G3.2

G:\ACAD\CHEFORNAK\CYF1101 Sewage Lagoon\G3.1 TO G3.2.dwg, 1/15/2014 4:26:18 PM, cmerz, \\Ce2main\LANIER MP C2050/LD520C PCL 6

CE2 CHEFORNAK LAGOON.GPJ LIBRARY-ANC(7-13-11).GLB [ANC BOREHOLE] DFreiss 7/19/11

RECORD OF BOREHOLE TP-5

SHEET 1 of 1

PROJECT: CE2 Chefornak Lagoon
PROJECT NUMBER: 113-95619
LOCATION: Chefornak, AK

CLIENT: CE2
DRILLING DATE: 4/2/2011
EQUIPMENT: Excavator- Hitachi EX 300

DATUM: WGS 84
ELEVATION: n/a
COORDS: 60.16231° N 164.29428° W

BORING METHOD: Bucket

DEPTH (ft)	SOIL PROFILE DESCRIPTION	ICE BOND	USCS	GRAPHIC LOG	ELEV. / DEPTH (ft)	SAMPLE NUMBER	TYPE	BLOWS PER FT	REC / ATT (inch)	UNCORRECTED BLOWS / FT (10 20 30 40)	SALINITY (ppt) Δ / WATER CONTENT (PERCENT) (W_P ⊢ ∂W ⊣ W_L)	NOTES TESTS WATER LEVELS GRAPHIC
0	0.0 - 1.0 Frozen, brown, fibrous PEAT, well bonded no excess ice (PT, Nbn)		PT									
	1.0 - 2.0 Frozen, brown, ORGANIC SILT, well bonded no excess ice (OL, Nbn)		OL		1.0	1	GS		6/6	Δ	114	
	2.0 - 9.0 Frozen, gray to dark gray, SILT, well bonded, approximately 5-10% visible ice by volume, trace organic material (ML, Vc to NF) Poorly bonded at 7 feet		ML		2.0	2	GS		6/6	Δ	71	Gravel = 0%, Sand = 10%, P200 = 90.0% 1 inch PVC
5												
10	9.0 - 18.0 Wet, gray to dark gray, sandy SILT, fine-grained sand, sand content increasing with depth (ML)		ML		9.0	3	GS		6/6			
15						4	GS		6/6			Gravel = 0%, Sand = 33%, P200 = 66.9%
20	Borehole completed at 18.0 ft.											

Notes:

1) Test pit backfilled with excavated materials
2) Closed-end 1 inch schedule 80 PVC installed to 18 feet, with 2 feet of stickup above grade
3) No groundwater observed

Golder Associates

DEPTH SCALE: 1 inch to 2.5 feet
DRILLING CONTRACTOR: CE2
DRILLER: Evan

LOGGED: J. Randazzo
CHECKED: D. Willman
CHECK DATE: 5/17/2011

Figure 8

RECORD OF BOREHOLE TP-6

SHEET 1 of 1

PROJECT: CE2 Chefornak Lagoon
PROJECT NUMBER: 113-95619
LOCATION: Chefornak, AK

CLIENT: CE2
DRILLING DATE: 4/2/2011
EQUIPMENT: Excavator- Hitachi EX 300

DATUM: WGS 84
ELEVATION: n/a
COORDS: 60.16136° N 164.29281° W

BORING METHOD: Bucket

DEPTH (ft)	SOIL PROFILE DESCRIPTION	ICE BOND	USCS	GRAPHIC LOG	ELEV. / DEPTH (ft)	SAMPLE NUMBER	TYPE	BLOWS PER FT	REC / ATT (inch)	UNCORRECTED BLOWS / FT (10 20 30 40)	SALINITY (ppt) Δ / WATER CONTENT (PERCENT) (W_P ⊢ ∂W ⊣ W_L)	NOTES TESTS WATER LEVELS GRAPHIC
0	0.0 - 0.5 Frozen, black, fibrous PEAT, well bonded no excess ice (PT, Nbn)		PT									
	0.5 - 1.5 Frozen, black, ORGANIC SILT, well bonded no excess ice (OL, Nbn)		OL		0.5	1	GS		6/6	Δ	110	Backfilled with excavated materials
	1.5 - 3.0 Wet, black, ORGANIC SILT (OL)		OL		1.5	2	GS		6/6	Δ	188	3 ft WD
5	3.0 - 5.0 Wet, black, SILT, trace sand (ML)		ML		3.0							
10	Borehole completed at 5.0 ft.											
15												
20												

Notes:

1) Test pit backfilled with excavated materials
2) Test pit excavated in potential drainage channel
3) Groundwater observed at 3 feet while excavating

Golder Associates

DEPTH SCALE: 1 inch to 2.5 feet
DRILLING CONTRACTOR: CE2
DRILLER: Evan

LOGGED: J. Randazzo
CHECKED: D. Willman
CHECK DATE: 5/17/2011

Figure 9

RECORD DRAWING CERTIFICATE
THESE DRAWINGS REFLECT RECORDED INFORMATION OBTAINED DURING CONSTRUCTION. INFORMATION PROVIDED HEREIN IS ACCURATE TO THE BEST OF MY KNOWLEDGE.
NAME DATE

SCALE:

CONSTRUCTION RECORD
FIELD BOOK
STAKING
FOREMAN
AS-BUILT
INSPECTOR

STATE OF ALASKA 49TH REGISTERED PROFESSIONAL ENGINEER Michael R. Eidman No.6262

FACULTATIVE LAGOON
TEST HOLE BORING LOGS
CHEFORNAK, ALASKA

CE2 ENGINEERS, INC.
PO BOX 230246 ANCHORAGE, AK 99523 PH: 907-349-9105 FAX: 907-349-9115

REVISION	BY	DATE
REVISED PER 65% COMMENTS	CM	1/2014

Project No. ____
Date JAN. 2014
Designed MRE
Drawn CM
Approved MRE

Sheet No. G3.3

G:\ACAD\CHEFORNAK\CYF1101 Sewage Lagoon\G3.1 TO G3.2.dwg, 1/15/2014 4:26:24 PM, cmerz, \\Ce2main\LANIER MP C2050/LD520C PCL 6
CE2 CHEFORNAK LAGOON.GPJ LIBRARY-ANC(7-13-11).GLB [ANC BOREHOLE] DFreeze 7/19/11

RECORD OF BOREHOLE TP-7

SHEET 1 of 1

PROJECT: CE2 Chefornak Lagoon
PROJECT NUMBER: 113-95619
LOCATION: Chefornak, AK

CLIENT: CE2
DRILLING DATE: 4/2/2011
EQUIPMENT: Excavator- Hitachi EX 300

DATUM: WGS 84
ELEVATION: n/a
COORDS: 60.16089° N 164.29033° W

BORING METHOD: Bucket

DEPTH (ft)	DESCRIPTION	ICE BOND	USCS	ELEV. / DEPTH (ft)	NUMBER	TYPE	BLOWS PER FT	REC / ATT (inch)	UNCORRECTED BLOWS / FT (10 20 30 40)	SALINITY (ppt) △ / WATER CONTENT (PERCENT) (10 20 30 40)
0	0.0 - 1.5 Frozen, brown, fibrous PEAT, well bonded no excess ice (PT, Nbn)		PT		1	GS		6/6		93
	1.5 - 10.0 Frozen, gray, SILT, well bonded, no visible ice, trace fibrous organic material (ML, Nbn to Nf)		ML	1.5	2	GS		6/6	△	80
	Poorly bonded at 8 feet, trace sand				3	GS		6/6	△	85
10	Borehole completed at 10.0 ft.									

SOIL PROFILE / SAMPLES / NOTES TESTS WATER LEVELS GRAPHIC

1 inch PVC

Notes:

1) Test pit backfilled with excavated materials
2) Closed-end 1 inch schedule 80 PVC installed to 10 feet, with 1.5 feet of stickup above grade
3) No groundwater observed

DEPTH SCALE: 1 inch to 2.5 feet
DRILLING CONTRACTOR: CE2
DRILLER: Evan

LOGGED: J. Randazzo
CHECKED: D. Willman
CHECK DATE: 5/17/2011

Golder Associates

Figure 10

RECORD OF BOREHOLE TP-8

SHEET 1 of 1

PROJECT: CE2 Chefornak Lagoon
PROJECT NUMBER: 113-95619
LOCATION: Chefornak, AK

CLIENT: CE2
DRILLING DATE: 4/3/2011
EQUIPMENT: Excavator- Hitachi EX 300

DATUM: WGS 84
ELEVATION: n/a
COORDS: 60.16025° N 164.28892° W

BORING METHOD: Bucket

DEPTH (ft)	DESCRIPTION	ICE BOND	USCS	ELEV. / DEPTH (ft)	NUMBER	TYPE	BLOWS PER FT	REC / ATT (inch)	UNCORRECTED BLOWS / FT (10 20 30 40)	SALINITY (ppt) △ / WATER CONTENT (PERCENT) (10 20 30 40)
0	0.0 - 0.5 Frozen, brown, fibrous PEAT, well bonded no excess ice (PT, Nbn)		PT							
	0.5 - 1.5 Frozen, brown, ORGANIC SILT, well bonded with approximately 5% visible ice by volume as coatings on particles (OL, Vc)		OL	0.5	1	GS		6/6		167
	1.5 - 3.5 Frozen, gray, SILT, trace sand, well bonded with approximately 5-10% visible ice by volume as coatings on particles (ML, Vc)		ML	1.5	2	GS		6/6	△	65
	3.5 - 5.0 Frozen, dark gray, ORGANIC SILT to SILT with organics, interbedded fibrous peat, poorly bonded with no visible ice (OL to ML, Nf)		OL	3.5						
5	5.0 - 7.0 Moist, black, SILT, trace to few fine-grained sand, nonplastic (ML)		ML	5.0	3	GS		6/6		103
	7.0 - 15.5 Moist, gray, SILT, low plasticity, trace sand (ML)		ML	7.0	4	GS		6/6		
					5	GS		6/6	△ H O	
10	Borehole completed at 15.5 ft.									

SOIL PROFILE / SAMPLES / NOTES TESTS WATER LEVELS GRAPHIC

Gravel = 0%, Sand = 11%, P200 = 88.6%, MA

1 inch PVC

Notes:

1) Test pit backfilled with excavated materials
2) Closed-end 1 inch schedule 80 PVC installed to 15.5 feet, with 4.5 feet of stickup above grade
3) No groundwater observed

DEPTH SCALE: 1 inch to 2.5 feet
DRILLING CONTRACTOR: CE2
DRILLER: Evan

LOGGED: J. Randazzo
CHECKED: D. Willman
CHECK DATE: 5/17/2011

Golder Associates

Figure 11

RECORD DRAWING CERTIFICATE
THESE DRAWINGS REFLECT RECORDED INFORMATION OBTAINED DURING CONSTRUCTION. INFORMATION PROVIDED HEREIN IS ACCURATE TO THE BEST OF MY KNOWLEDGE.
NAME / DATE

SCALE:
BAR IS ONE INCH ON ORIGINAL DRAWING
IF NOT ONE INCH ON THIS SHEET ADJUST SCALES ACCORDINGLY

CONSTRUCTION RECORD
FIELD BOOK
STAKING
FOREMAN
AS-BUILT
INSPECTOR

STATE OF ALASKA 49TH REGISTERED PROFESSIONAL ENGINEER Michael R. Eittman No.6262

FACULTATIVE LAGOON

TEST HOLE BORING LOGS

CHEFORNAK, ALASKA

CE2 ENGINEERS, INC.
PO BOX 230948 ANCHORAGE, AK 99523 PH: 907-349-1015 FAX: 907-349-1015

REVISION	BY	DATE
REVISED PER 65% COMMENTS	CM	1/2014

Project No. ____
Date JAN. 2014
Designed MRE
Drawn CM
Approved MRE

Sheet No.
G3.4

G:\ACAD\CHEFORNAK\CYF1101 Sewage Lagoon\G3.1 TO G3.2.dwg, 1/15/2014 4:26:32 PM, cmerz, \\Ce2main\LANIER MP C2050/LD520C PCL 6

CE2 CHEFORNAK LAGOON.GPJ LIBRARY-ANC(7-13-11).GLB [ANC BOREHOLE] DFrame 7/19/11

Mid Oct - End May

WINTER STORAGE

Cell 1 kept at "full" working depth (approx. 8') at all times. Cell 2 allowed to fill during this period.

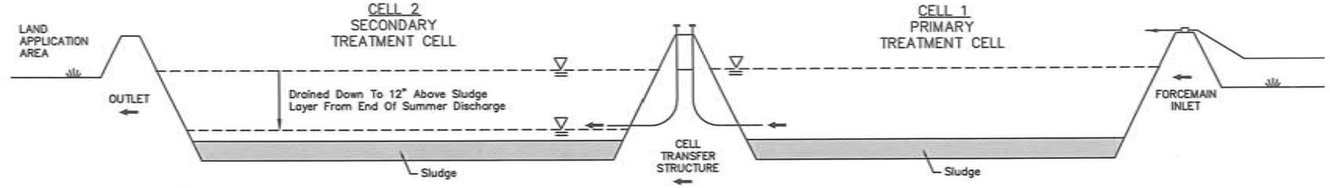

Late May - Early June

SPRING MAINTENANCE

Remove debris. Cut and remove brush within ten feet from perimeter fence and within enclosed area.

Inspect and repair fence, dikes, control structures, other facilities. Exercise valves. Ensure control structures, valves, and piping are ice-free.

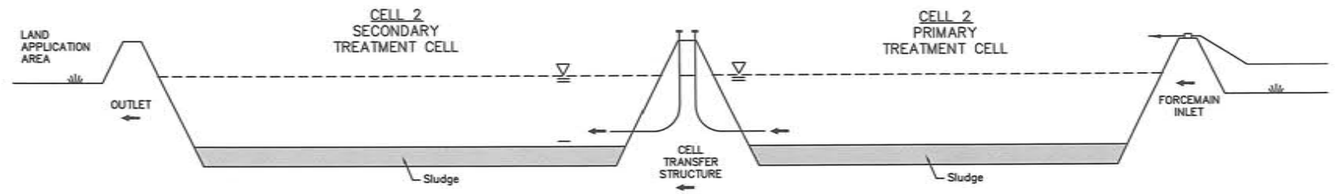

Early June

SPRING DISCHARGE

After Cell 2 has been ice free for a minimum of three weeks, begin discharging Cell 2 (through the Outlet Pumping System) to the Land Application Area. Adjust the pumping rate to obtain approximately 250 GPM discharge flow rate. Stop pumping with 12-inches of water remaining.

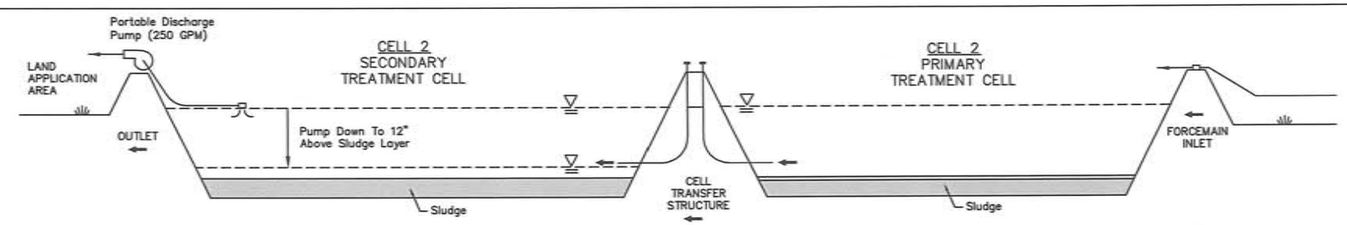

June - mid-Oct.

Cell 2 SUMMER Fill

Allow Cell 2 to fill.

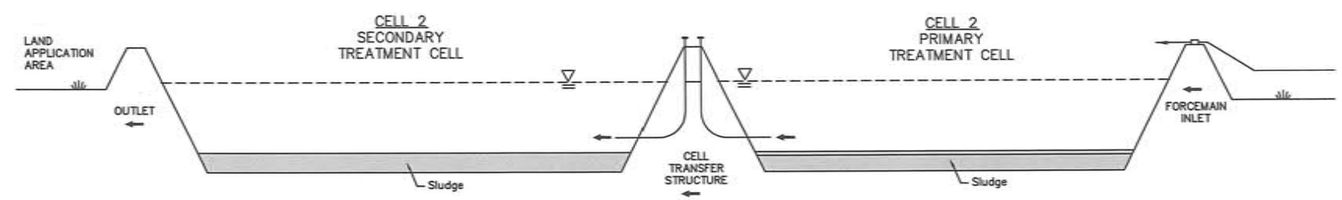

Mid October

END-OF-SUMMER DISCHARGE

Begin discharge of Cell 2 through the outlet Pumping Pumping System approximately two-weeks prior to the start of the "Freezing Season" during normal wet Fall weather. Adjust the pumping rate to obtain approximately 250 GPM. Stop pumping with 12-inches of water remaining.

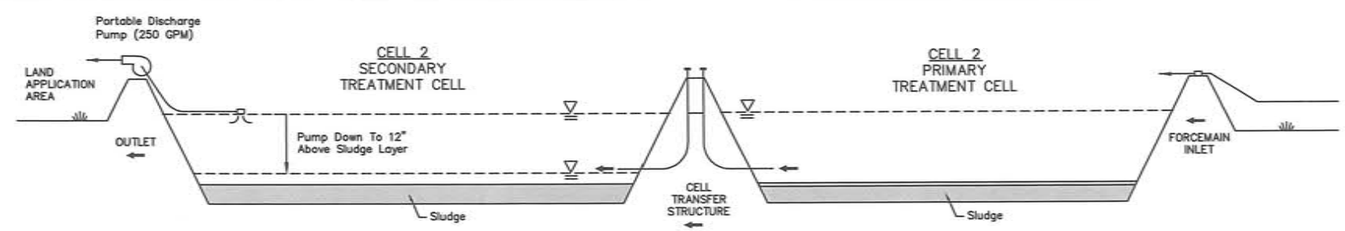

1 / G4.0 **WASTEWATER LAGOON OPERATING PLAN**

N.T.S.

RECORD DRAWING CERTIFICATE

THESE DRAWINGS REFLECT RECORDED INFORMATION OBTAINED DURING CONSTRUCTION. INFORMATION PROVIDED HEREIN IS ACCURATE TO THE BEST OF MY KNOWLEDGE.

NAME DATE

SCALE: AS SHOWN

BAR IS ONE INCH ON ORIGINAL DRAWING

IF NOT ONE INCH ON THIS SHEET, ADJUST SCALES ACCORDINGLY

CONSTRUCTION RECORD

FIELD BOOK

STAKING

FOREMAN

AS-BUILT

INSPECTOR

STATE OF ALASKA 49TH REGISTERED PROFESSIONAL ENGINEER Michael R. Erdman No.6262

FACULTATIVE LAGOON

LAGOON OPERATING PLAN

CHEFORNAK, ALASKA

CE2 ENGINEERS, INC.

PO BOX 223246 ANCHORAGE, AK 99523 PH: 907-349-1010 FAX: 907-349-1015

REVISION	BY	DATE
REVISED PER 65% COMMENTS	CM	1/2014

Project No. ____ Date JAN. 2014 Designed MRE Drawn CM Approved MRE

Sheet No. G4.0

G:\ACAD\CHEFORNAK\CYF1101 Sewage Lagoon\G4.0 Operating Plan.dwg, 1/15/2014 4:27:01 PM, cmerz, \\Ce2main\LANIER MP C2050/LD520C PCL 6

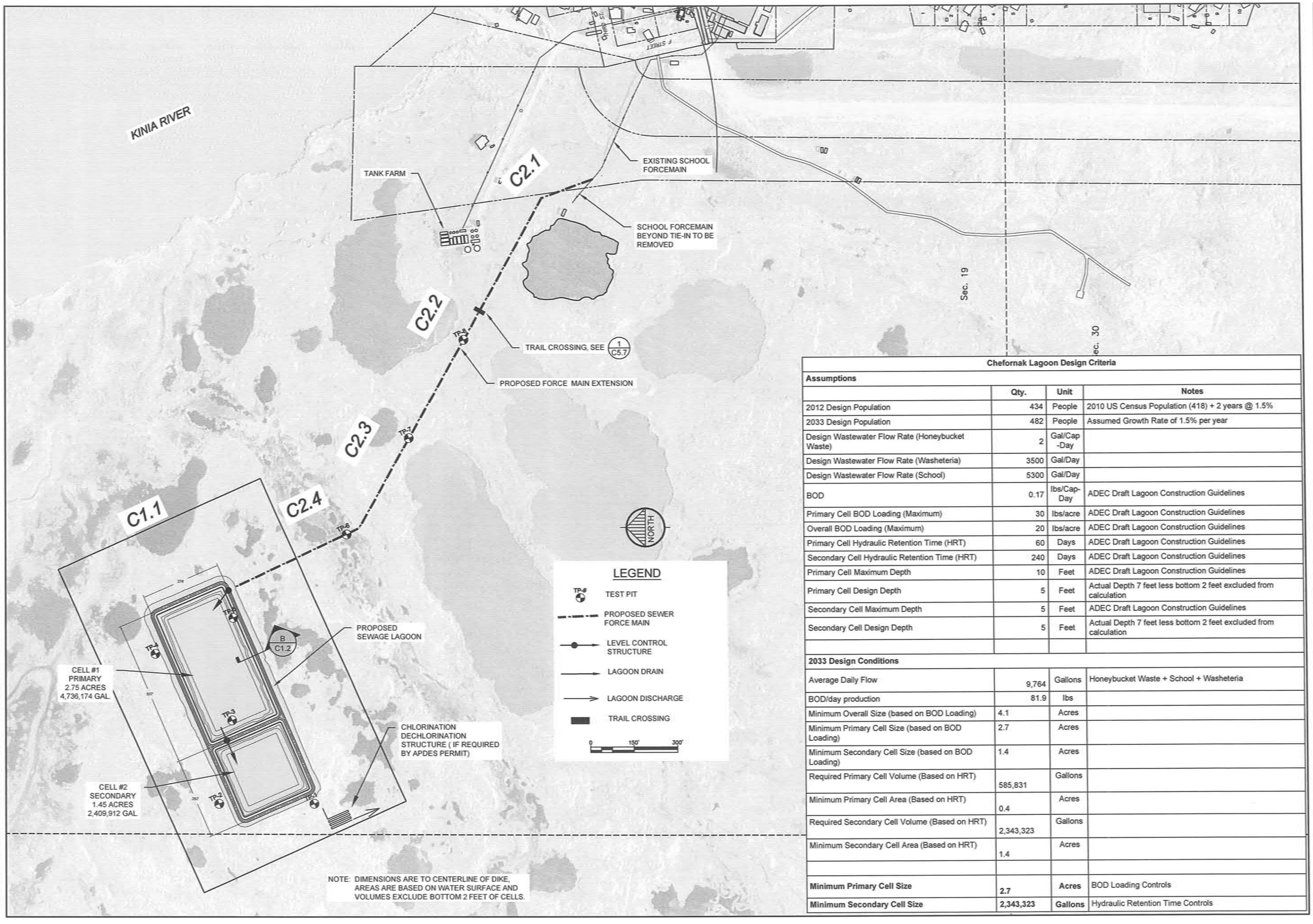

Chefornak Lagoon Design Criteria

Assumptions	Qty.	Unit	Notes
2012 Design Population	434	People	2010 US Census Population (418) + 2 years @ 1.5%
2033 Design Population	482	People	Assumed Growth Rate of 1.5% per year
Design Wastewater Flow Rate (Honeybucket Waste)	2	Gal/Cap -Day	
Design Wastewater Flow Rate (Washeteria)	3500	Gal/Day	
Design Wastewater Flow Rate (School)	5300	Gal/Day	
BOD	0.17	lbs/Cap-Day	ADEC Draft Lagoon Construction Guidelines
Primary Cell BOD Loading (Maximum)	30	lbs/acre	ADEC Draft Lagoon Construction Guidelines
Overall BOD Loading (Maximum)	20	lbs/acre	ADEC Draft Lagoon Construction Guidelines
Primary Cell Hydraulic Retention Time (HRT)	60	Days	ADEC Draft Lagoon Construction Guidelines
Secondary Cell Hydraulic Retention Time (HRT)	240	Days	ADEC Draft Lagoon Construction Guidelines
Primary Cell Maximum Depth	10	Feet	ADEC Draft Lagoon Construction Guidelines
Primary Cell Design Depth	5	Feet	Actual Depth 7 feet less bottom 2 feet excluded from calculation
Secondary Cell Maximum Depth	5	Feet	ADEC Draft Lagoon Construction Guidelines
Secondary Cell Design Depth	5	Feet	Actual Depth 7 feet less bottom 2 feet excluded from calculation
2033 Design Conditions			
Average Daily Flow	9,764	Gallons	Honeybucket Waste + School + Washeteria
BOD/day production	81.9	lbs	
Minimum Overall Size (based on BOD Loading)	4.1	Acres	
Minimum Primary Cell Size (based on BOD Loading)	2.7	Acres	
Minimum Secondary Cell Size (based on BOD Loading)	1.4	Acres	
Required Primary Cell Volume (Based on HRT)	585,831	Gallons	
Minimum Primary Cell Area (Based on HRT)	0.4	Acres	
Required Secondary Cell Volume (Based on HRT)	2,343,323	Gallons	
Minimum Secondary Cell Area (Based on HRT)	1.4	Acres	
Minimum Primary Cell Size	**2.7**	**Acres**	BOD Loading Controls
Minimum Secondary Cell Size	**2,343,323**	**Gallons**	Hydraulic Retention Time Controls

RECORD DRAWING CERTIFICATE
THESE DRAWINGS REFLECT RECORDED INFORMATION OBTAINED DURING CONSTRUCTION. INFORMATION PROVIDED HEREIN IS ACCURATE TO THE BEST OF MY KNOWLEDGE.
NAME DATE

SCALE: AS SHOWN
BAR IS ONE INCH ON ORIGINAL DRAWING
IF NOT ONE INCH ON THIS SHEET, ADJUST SCALES ACCORDINGLY

CONSTRUCTION RECORD
FIELD BOOK
STAKING
FOREMAN
AS-BUILT
INSPECTOR

STATE OF ALASKA 49TH Michael R. Erdman No.6252 REGISTERED PROFESSIONAL ENGINEER

FACULTATIVE LAGOON
KEY MAP AND DESIGN CRITERIA
CHEFORNAK, ALASKA

CE2 ENGINEERS, INC.
PO BOX 232946 ANCHORAGE, AK 99523 PH: 907-349-1010 FAX: 907-349-1015

REVISION	BY	DATE
REVISED PER 65% COMMENTS	CM	1/2014

Project No. ____
Date JAN. 2014
Designed MRE
Drawn CM
Approved MRE

Sheet No. C1.0

G:\ACAD\CHEFORNAK\CYF1101 Sewage Lagoon\C1.0 KEY MAP.dwg, 1/15/2014 4:30:11 PM, cmerz, \\Ce2main\LANIER MP C2050/LD520C PCL 6

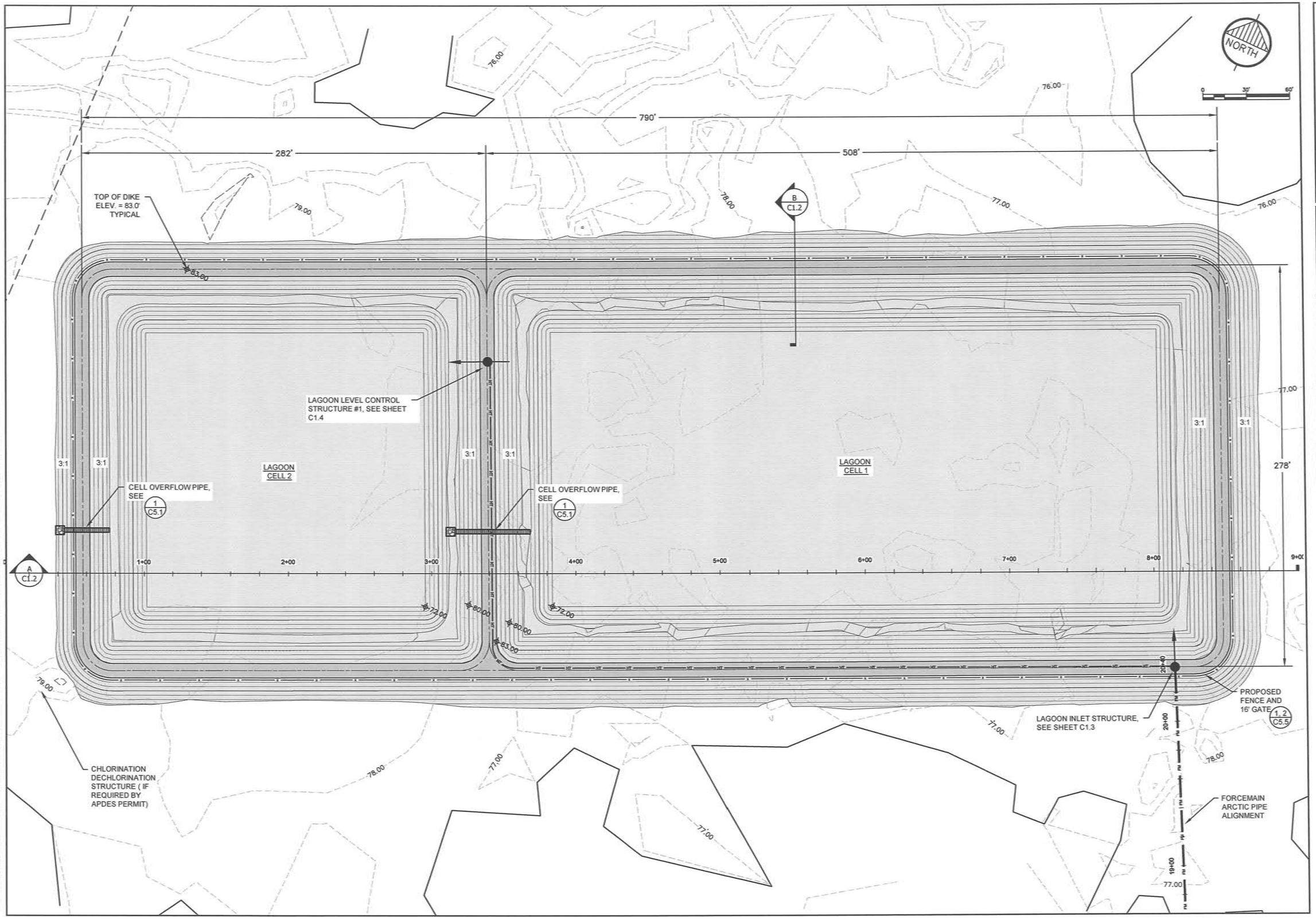

RECORD DRAWING CERTIFICATE

THESE DRAWINGS REFLECT RECORDED INFORMATION OBTAINED DURING CONSTRUCTION. INFORMATION PROVIDED HEREIN IS ACCURATE TO THE BEST OF MY KNOWLEDGE.

NAME DATE

SCALE: AS SHOWN

BAR IS ONE INCH ON ORIGINAL DRAWING

0 1"

IF NOT ONE INCH ON THIS SHEET, ADJUST SCALES ACCORDINGLY

CONSTRUCTION RECORD

FIELD BOOK

STAKING

FOREMAN

AS-BUILT

INSPECTOR

STATE OF ALASKA 49TH Michael R. Erdman No.6252 REGISTERED PROFESSIONAL ENGINEER

FACULTATIVE LAGOON

LAGOON SITE PLAN

CHEFORNAK, ALASKA

CE2 ENGINEERS, INC.

PO BOX 223948 ANCHORAGE, AK 99523 PH: 907-349-1010 FAX: 907-349-1015

REVISION	BY	DATE
REVISED PER 65% COMMENTS	CM	1/2014

Project No. ____
Date JAN. 2014
Designed MRE
Drawn CM
Approved MRE

Sheet No.
C1.1

G:\ACAD\CHEFORNAK\CYF1101 Sewage Lagoon\C1.1 LAGOON SITE PLAN 2013.dwg, 1/15/2014 4:33:16 PM, cmerz, \\Ce2main\LANIER MP C2050/LD520C PCL 6

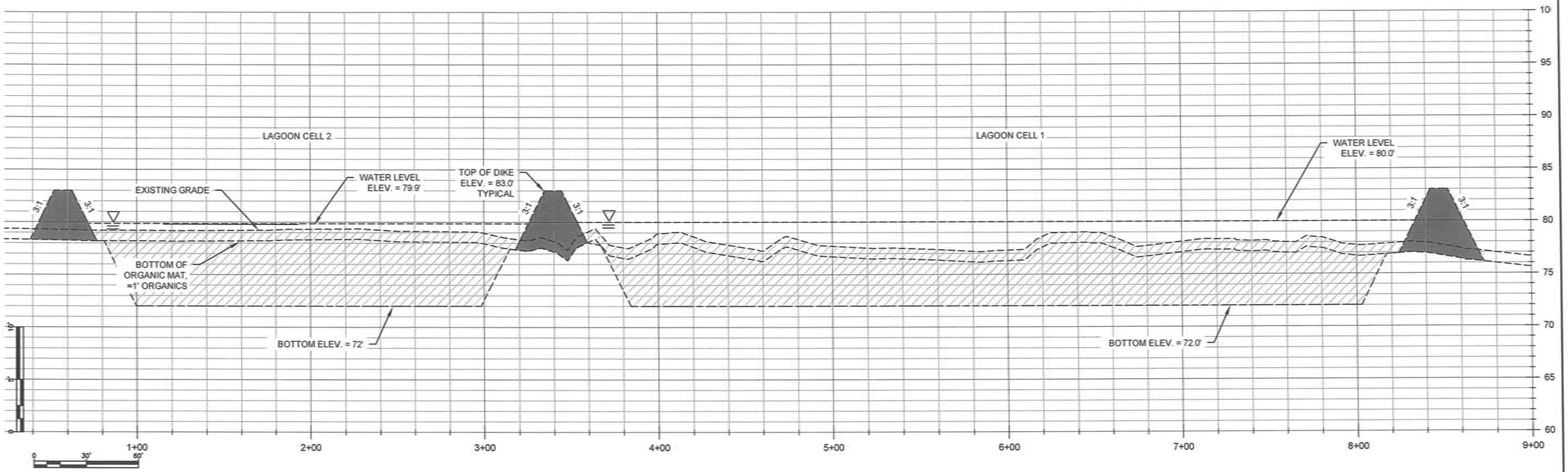

A LAGOON CROSS-SECTION
1:6 VERTICAL EXAGGERATION

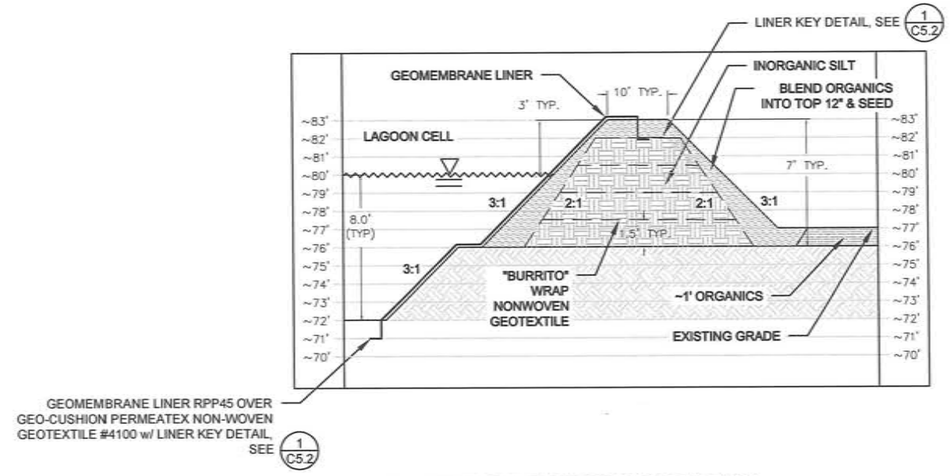

B TYPICAL DIKE CROSS-SECTION
3:1 VERTICAL SCALE

RECORD DRAWING CERTIFICATE
THESE DRAWINGS REFLECT RECORDED INFORMATION OBTAINED DURING CONSTRUCTION. INFORMATION PROVIDED HEREIN IS ACCURATE TO THE BEST OF MY KNOWLEDGE.
NAME DATE

SCALE: AS SHOWN
BAR IS ONE INCH ON ORIGINAL DRAWING
IF NOT ONE INCH ON THIS SHEET, ADJUST SCALES ACCORDINGLY

CONSTRUCTION RECORD
FIELD BOOK
STAKING
FOREMAN
AS-BUILT
INSPECTOR

STATE OF ALASKA 49TH Michael R. Erdman No.6252 REGISTERED PROFESSIONAL ENGINEER

FACULTATIVE LAGOON
LAGOON CROSS SECTIONS
CHEFORNAK, ALASKA

CE2 ENGINEERS, INC.
PO BOX 232046 ANCHORAGE, AK 99523 PH: 907-349-1010 FAX: 907-349-1015

REVISION	BY	DATE
REVISED PER 85% COMMENTS	CM	1/2014

Project No.
Date JAN. 2014
Designed MRE
Drawn CM
Approved MRE

Sheet No.
C1.2

G:\ACAD\CHEFORNAK\CYF1101 Sewage Lagoon\C1.2 LAGOON CROSS SECTIONS.dwg, 1/15/2014 4:33:56 PM, cmerz, \\Ce2main\LANIER MP C2050/LD520C PCL 6

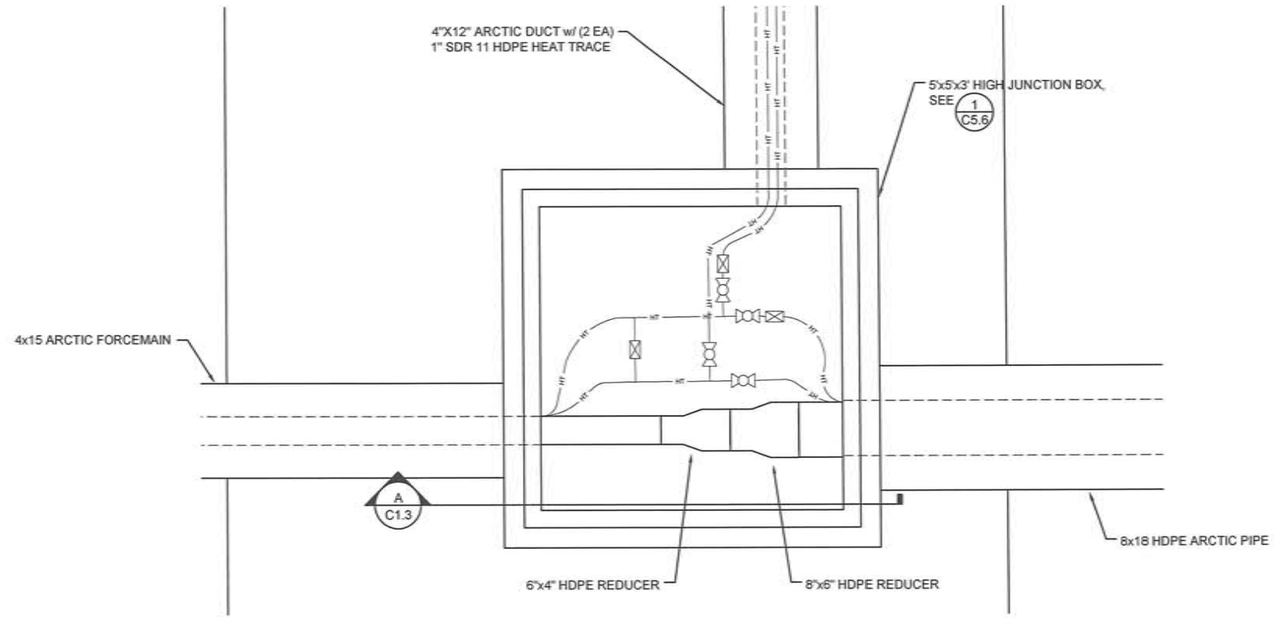

1 C1.3 LAGOON INLET STRUCTURE PLAN
1" = 1'-0"

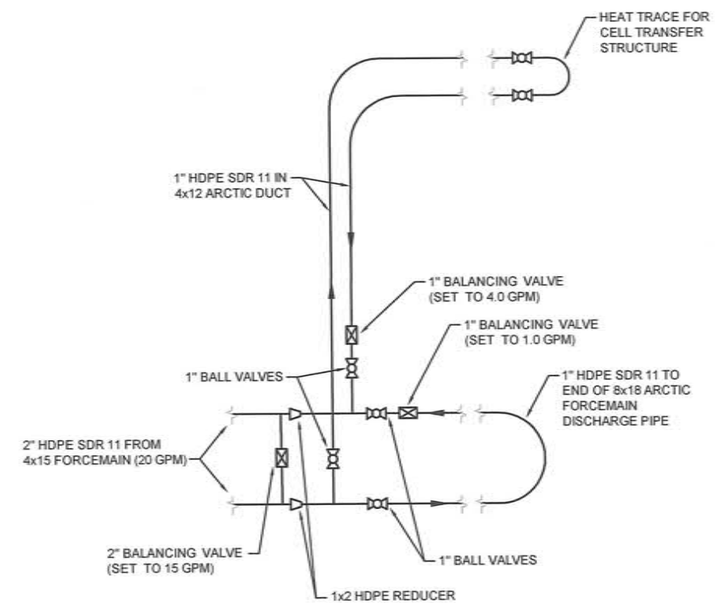

2 C1.3 GLYCOL HEAT TRACE SCHEMATIC
NTS

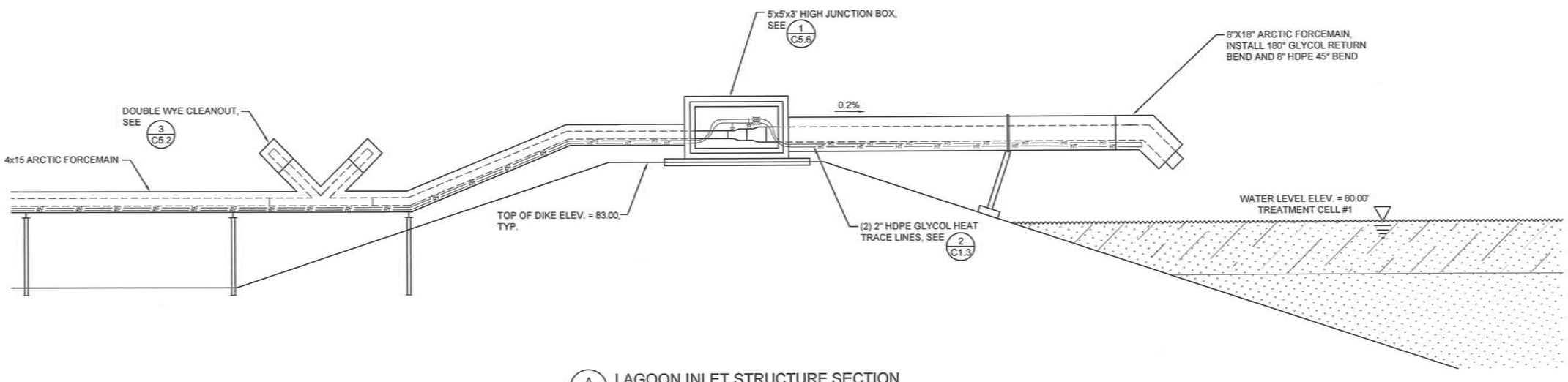

A C1.3 LAGOON INLET STRUCTURE SECTION
3/8" = 1'-0"

RECORD DRAWING CERTIFICATE

THESE DRAWINGS REFLECT RECORDED INFORMATION OBTAINED DURING CONSTRUCTION. INFORMATION PROVIDED HEREIN IS ACCURATE TO THE BEST OF MY KNOWLEDGE.

NAME DATE

SCALE: AS SHOWN

BAR IS ONE INCH ON ORIGINAL DRAWING. 0 1"

IF NOT ONE INCH ON THIS SHEET, ADJUST SCALES ACCORDINGLY

CONSTRUCTION RECORD
FIELD BOOK
STAKING
FOREMAN
AS-BUILT
INSPECTOR

STATE OF ALASKA 49TH REGISTERED PROFESSIONAL ENGINEER Michael R. Erdman No.6262

FACULTATIVE LAGOON

LAGOON INLET STRUCTURE

CHEFORNAK, ALASKA

CE2 ENGINEERS, INC.
PO BOX 230948 ANCHORAGE, AK 99523 PH: 907-349-1019 FAX: 907-349-1015

REVISION	BY	DATE
REVISED PER 65% COMMENTS	CM	1/2014

Project No. ____
Date JAN. 2014
Designed MRE
Drawn CM
Approved MRE

Sheet No.
C1.3

G:\ACAD\CHEFORNAK\CYF1101 Sewage Lagoon\C1.3 INTAKE STRUCTURE.dwg, 1/15/2014 4:50:26 PM, cmerz, \\Ce2main\LANIER MP C2050/LD520C PCL 6

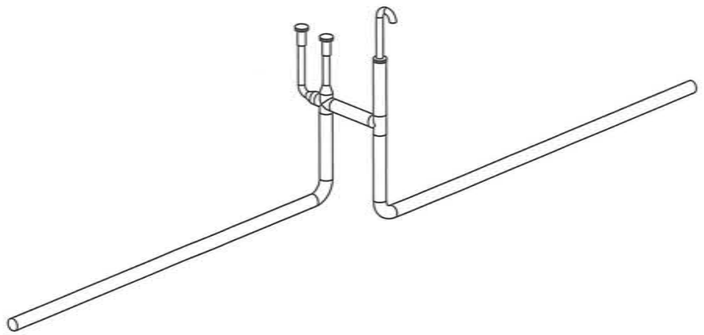

PERSPECTIVE VIEW
N.T.S.

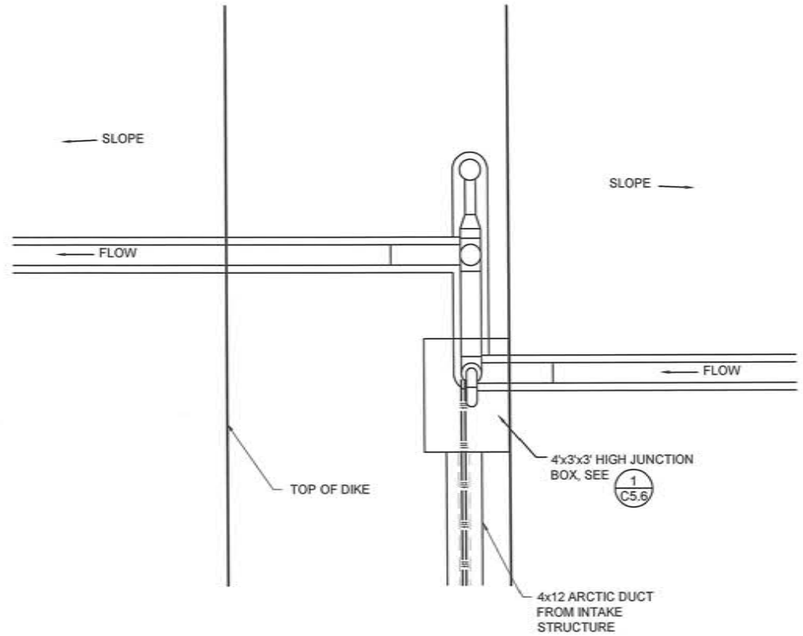

PLAN VIEW
3/8" = 1'-0"

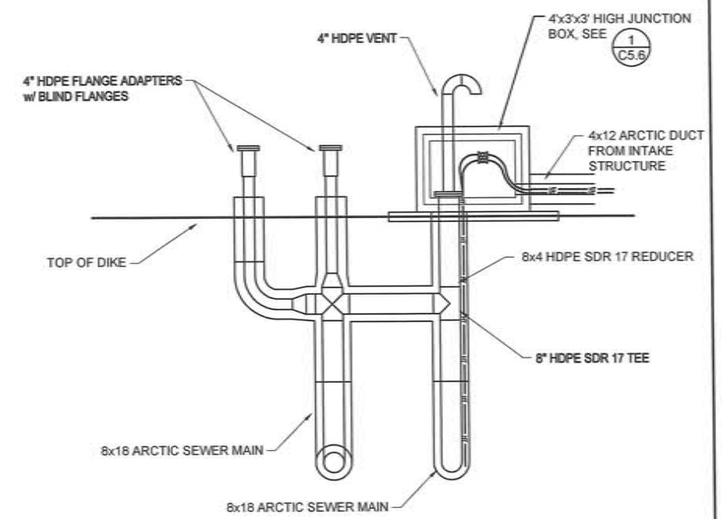

ELEVATION VIEW
3/8" = 1'-0"

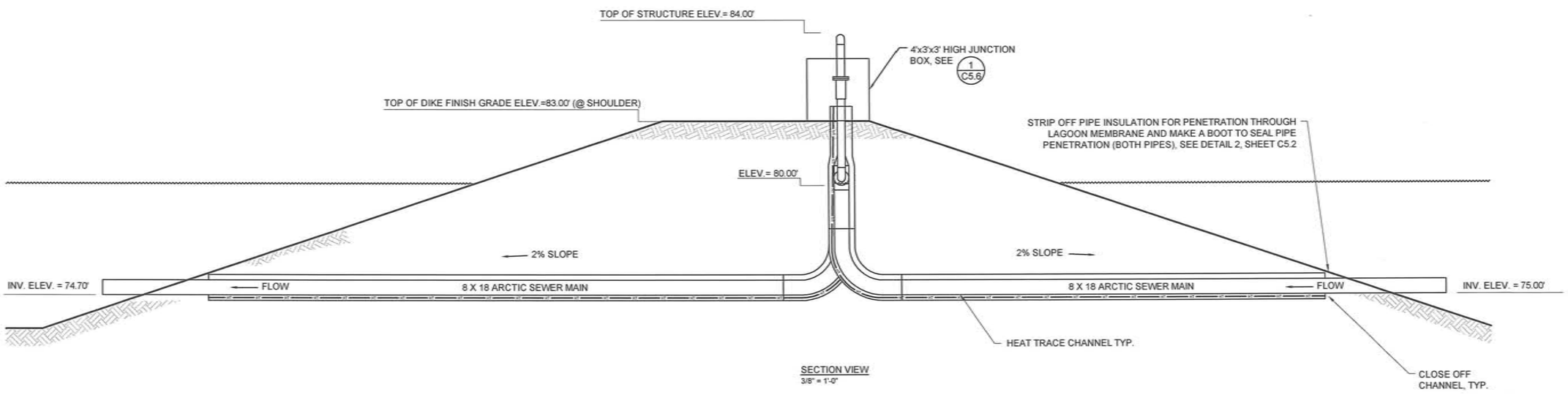

SECTION VIEW
3/8" = 1'-0"

1/C1.4 CELL TRANSFER STRUCTURE

RECORD DRAWING CERTIFICATE

THESE DRAWINGS REFLECT RECORDED INFORMATION OBTAINED DURING CONSTRUCTION. INFORMATION PROVIDED HEREIN IS ACCURATE TO THE BEST OF MY KNOWLEDGE.

NAME DATE

SCALE: AS SHOWN

BAR IS ONE INCH ON ORIGINAL DRAWING 0 1"

IF NOT ONE INCH ON THIS SHEET, ADJUST SCALES ACCORDINGLY

CONSTRUCTION RECORD
FIELD BOOK
STAKING
FOREMAN
AS-BUILT
INSPECTOR

STATE OF ALASKA 49TH REGISTERED PROFESSIONAL ENGINEER Michael R. Erdman No.6262

FACULTATIVE LAGOON

CELL TRANSFER STRUCTURE

CHEFORNAK, ALASKA

CE2 ENGINEERS, INC.
PO BOX 230249 ANCHORAGE, AK 99523 PH: 907-349-1010 FAX: 907-349-1015

REVISION	BY	DATE
REVISED PER 65% COMMENTS	CM	1/2014

Project No. ____
Date JAN. 2014
Designed MRE
Drawn CM
Approved MRE

Sheet No. C1.4

G:\ACAD\CHEFORNAK\CYF1101 Sewage Lagoon\C1.4 Transfer Structure.dwg, 1/15/2014 4:34:42 PM, cmerz, \\Ce2main\LANIER MP C2050/LD520C PCL 6

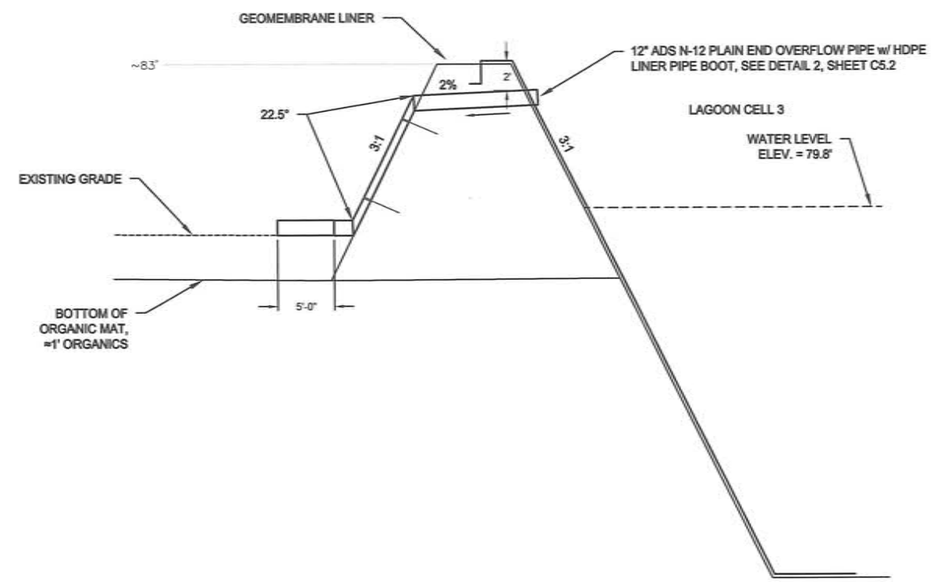

1 / C1.5 LAGOON OVERFLOW PIPE
NTS

RECORD DRAWING CERTIFICATE
THESE DRAWINGS REFLECT RECORDED INFORMATION OBTAINED DURING CONSTRUCTION. INFORMATION PROVIDED HEREIN IS ACCURATE TO THE BEST OF MY KNOWLEDGE.
NAME DATE

SCALE: AS SHOWN
BAR IS ONE INCH ON ORIGINAL DRAWING
IF NOT ONE INCH ON THIS SHEET, ADJUST SCALE ACCORDINGLY

CONSTRUCTION RECORD
FIELD BOOK
STAKING
FOREMAN
AS-BUILT
INSPECTOR

STATE OF ALASKA 49TH Michael R. Erdman No. 6252 REGISTERED PROFESSIONAL ENGINEER

FACULTATIVE LAGOON
LAGOON OVERFLOW
CHEFORNAK, ALASKA

CE2 ENGINEERS, INC.
PO BOX 223246 ANCHORAGE, AK 99523 PH: 907-349-1015 FAX: 907-349-1015

REVISION	BY	DATE
REVISED PER 65% COMMENTS	CM	1/2014

Project No. ____
Date JAN. 2014
Designed MRE
Drawn CM
Approved MRE

Sheet No. C1.5

G:\ACAD\CHEFORNAK\CYF1101 Sewage Lagoon\C1.5 Overflow and Outlet.dwg, 1/15/2014 4:43:36 PM, cmerz, \\Ce2main\LANIER MP CZ050/LD520C PCL 6

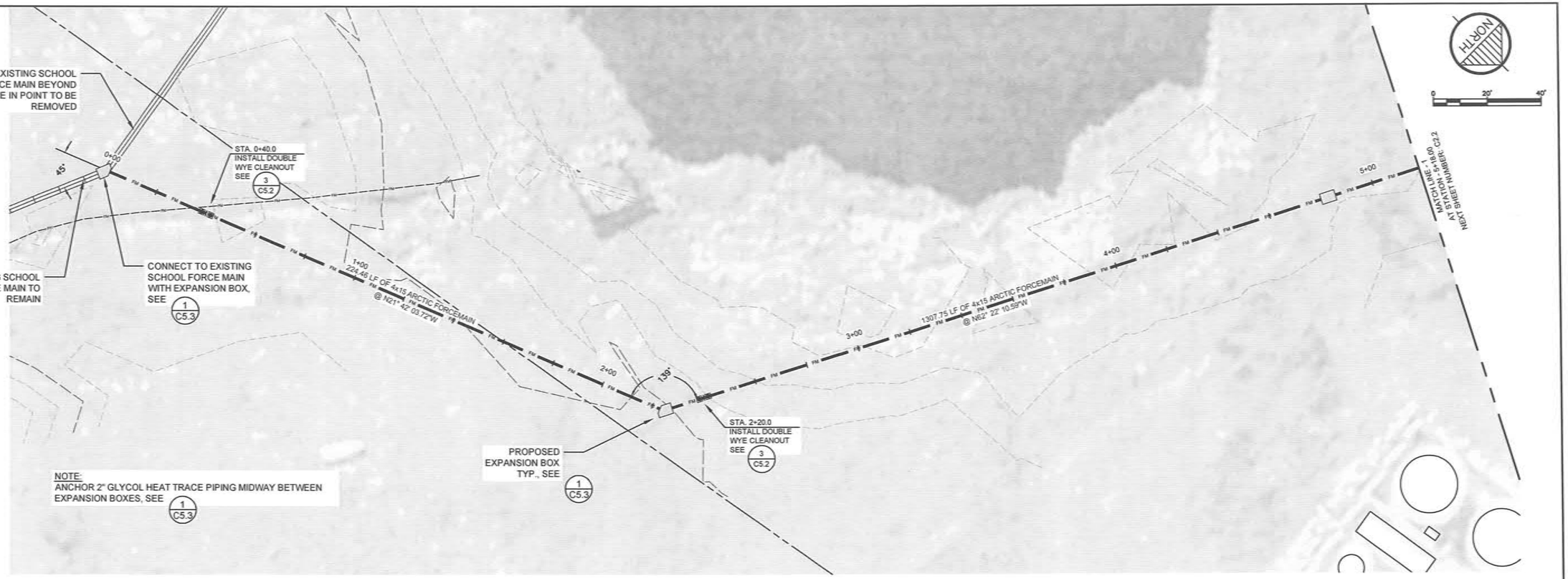

NOTE: ELEVATIONS SHOWN ARE AT BOTTOM OF ARCTIC PIPE JACKET (TOP OF PIPE SUPPORT BEAM)

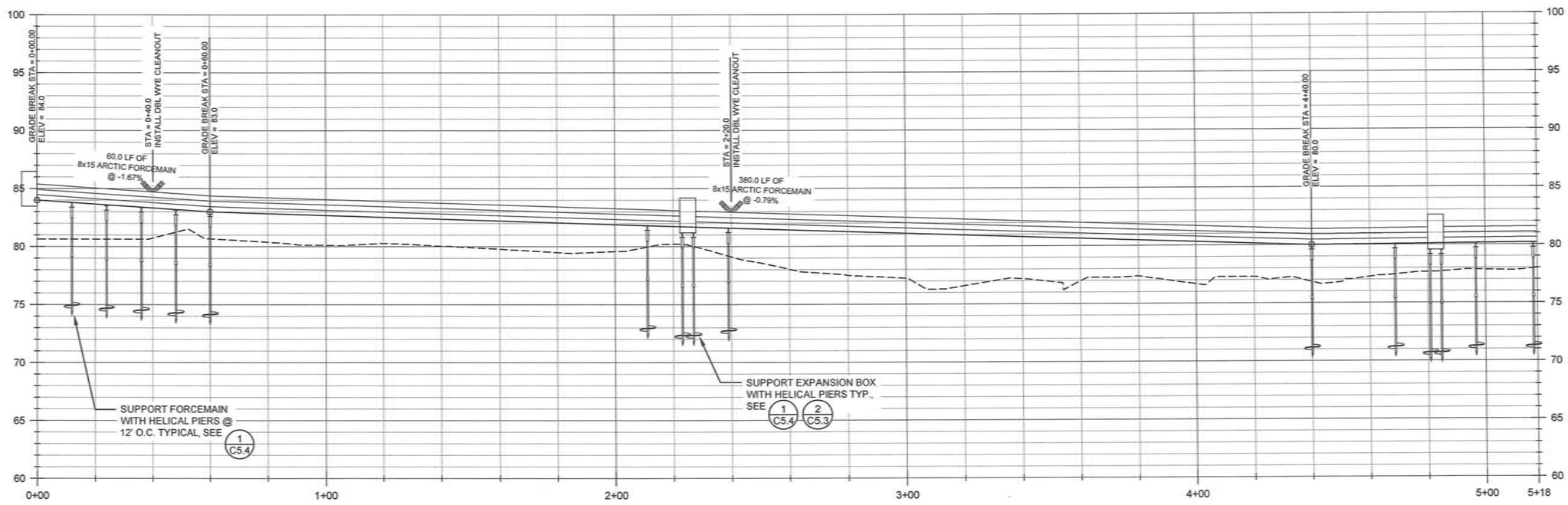

RECORD DRAWING CERTIFICATE

THESE DRAWINGS REFLECT RECORDED INFORMATION OBTAINED DURING CONSTRUCTION. INFORMATION PROVIDED HEREIN IS ACCURATE TO THE BEST OF MY KNOWLEDGE.

NAME DATE

SCALE:

BAR IS ONE INCH ON ORIGINAL DRAWING

0 1"

IF NOT ONE INCH ON THIS SHEET, ADJUST SCALE ACCORDINGLY

CONSTRUCTION RECORD

FIELD BOOK

STAKING

FOREMAN

AS-BUILT

INSPECTOR

STATE OF ALASKA 49TH REGISTERED PROFESSIONAL ENGINEER Michael R. Eckman No.6262

FACULTATIVE LAGOON

PLAN AND PROFILE

CHEFORNAK, ALASKA

CE2 ENGINEERS, INC.

PO BOX 232066 ANCHORAGE, AK 99523 PH: 907-349-1019 FAX: 907-349-1015

REVISION	BY	DATE
REVISED PER 65% COMMENTS	CM	1/2014

Project No. ____ Date JAN. 2014 Designed ____ Drawn CM Approved ____

Sheet No. C2.1

G:\ACAD\CHEFORNAK\CYF1101 Sewage Lagoon\C2.1 Plan and Profiles.dwg, 1/15/2014 3:50:33 PM, cmerz, \\Ce2main\LANIER MP C2050/LD520C PCL 6

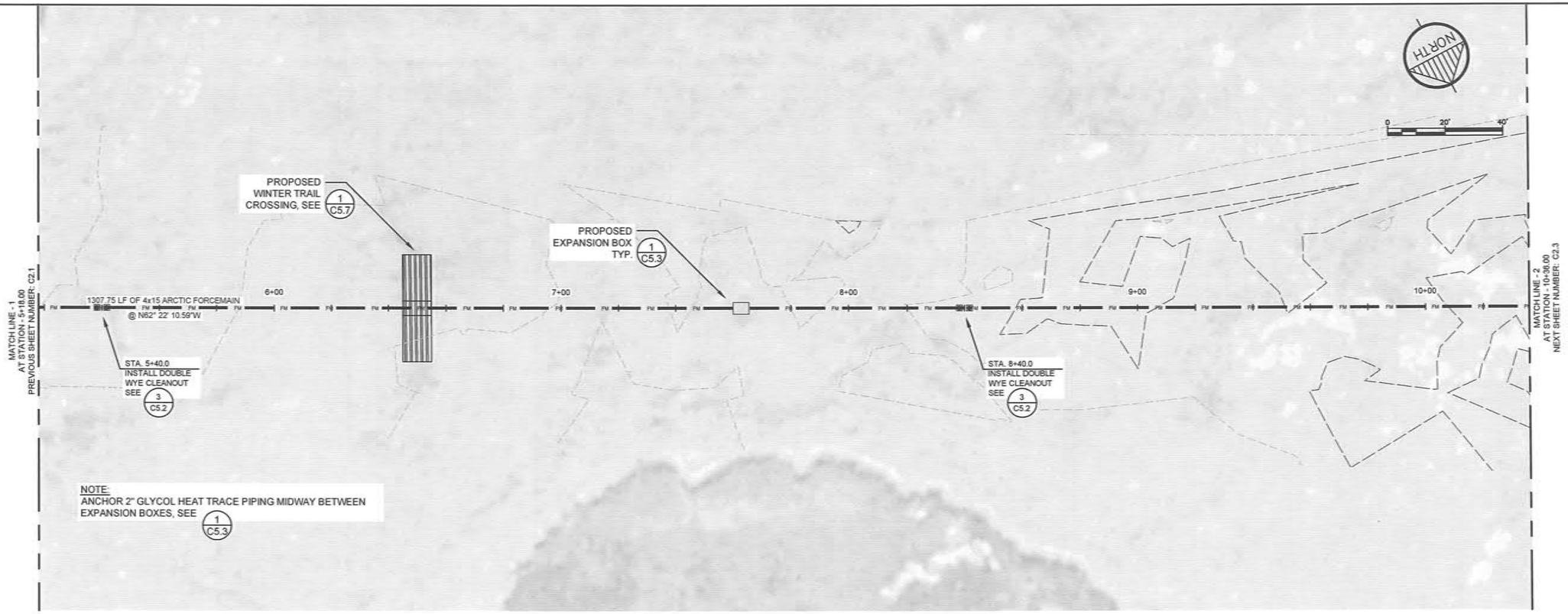

NOTE:
ANCHOR 2" GLYCOL HEAT TRACE PIPING MIDWAY BETWEEN EXPANSION BOXES, SEE 1/C5.3

NOTE: ELEVATIONS SHOWN ARE AT BOTTOM OF ARCTIC PIPE JACKET (TOP OF PIPE SUPPORT BEAM)

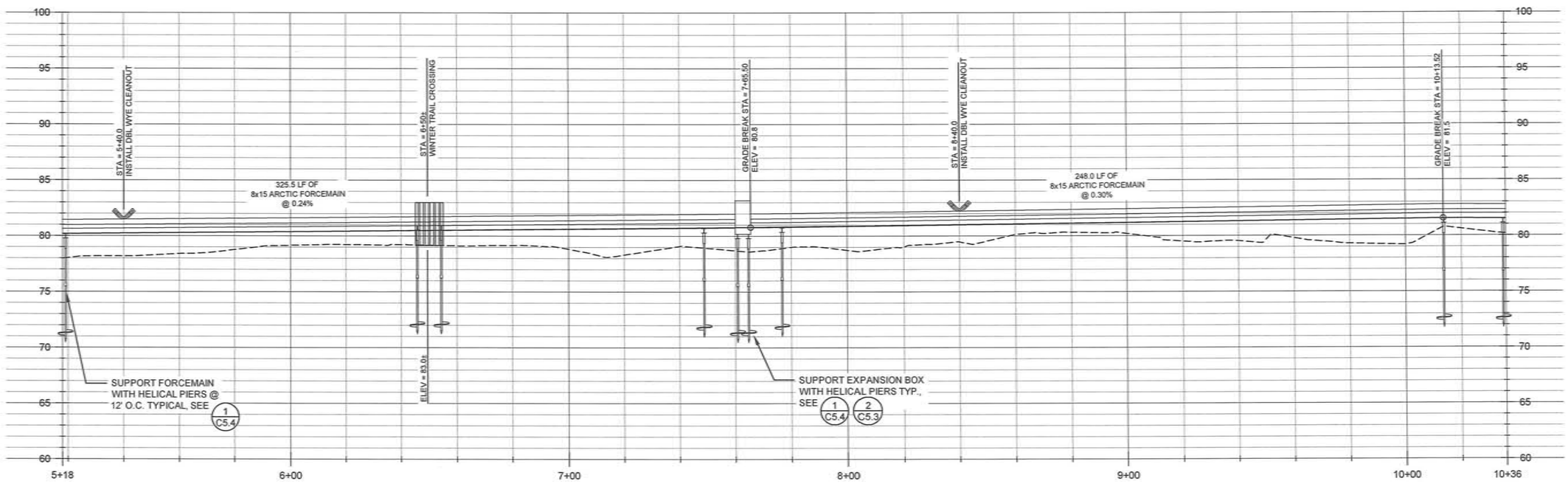

RECORD DRAWING CERTIFICATE
THESE DRAWINGS REFLECT RECORDED INFORMATION OBTAINED DURING CONSTRUCTION. INFORMATION PROVIDED HEREIN IS ACCURATE TO THE BEST OF MY KNOWLEDGE.
NAME DATE

SCALE:
BAR IS ONE INCH ON ORIGINAL DRAWING
0 1"
IF NOT ONE INCH ON THIS SHEET, ADJUST SCALES ACCORDINGLY

CONSTRUCTION RECORD
FIELD BOOK
STAKING
FOREMAN
AS-BUILT
INSPECTOR

STATE OF ALASKA 49TH REGISTERED PROFESSIONAL ENGINEER Michael R. Erdman No.6262

FACULTATIVE LAGOON
PLAN AND PROFILE
CHEFORNAK, ALASKA

CE2 ENGINEERS, INC.
PO BOX 232946 ANCHORAGE, AK 99523 PH: 907-349-1010 FAX: 907-349-1015

REVISION	BY	DATE
REVISED PER 60% COMMENTS	CM	1/2014

Project No. ____
Date JAN. 2014
Designed ____
Drawn CM
Approved ____

Sheet No.
C2.2

G:\ACAD\CHEFORNAK\CYF1101 Sewage Lagoon\C2.1 Plan and Profiles.dwg, 1/15/2014 3:51:48 PM, cmerz, \\Ce2main\LANIER MP C2050/LD520C PCL 6

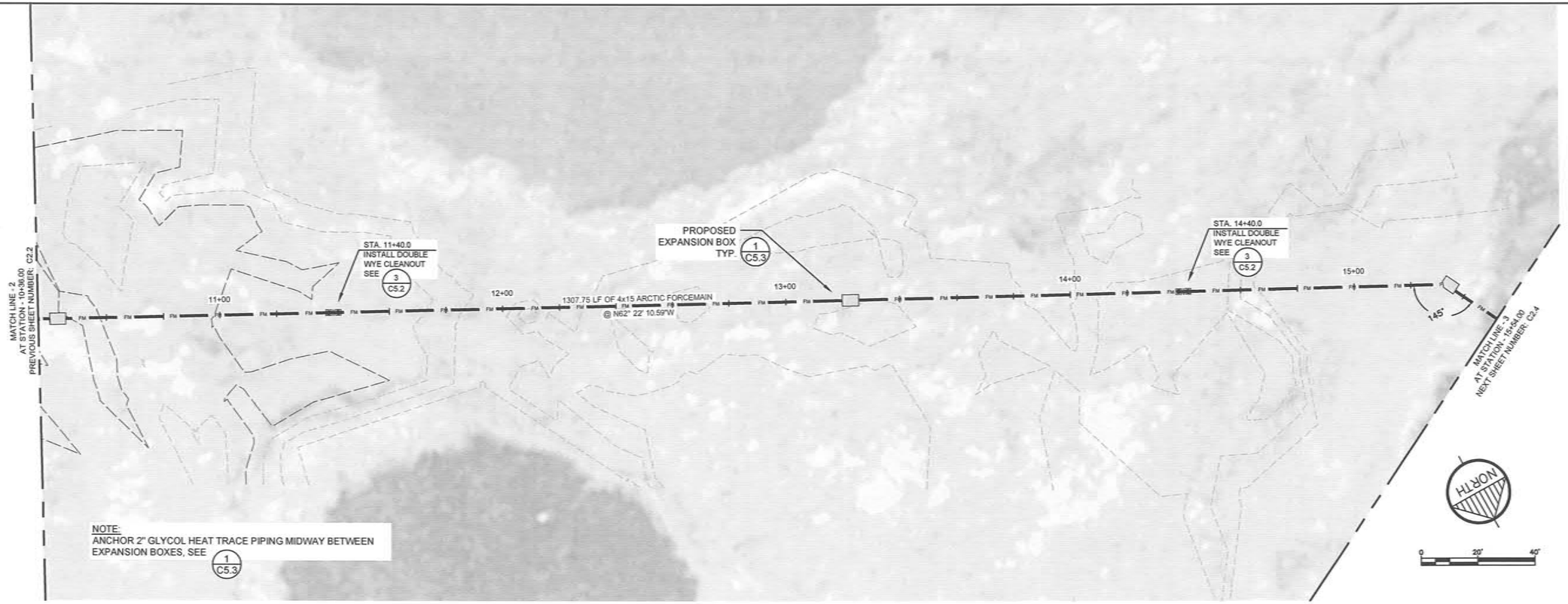

NOTE:
ANCHOR 2" GLYCOL HEAT TRACE PIPING MIDWAY BETWEEN EXPANSION BOXES, SEE 1 C5.3

NOTE: ELEVATIONS SHOWN ARE AT BOTTOM OF ARCTIC PIPE JACKET (TOP OF PIPE SUPPORT BEAM)

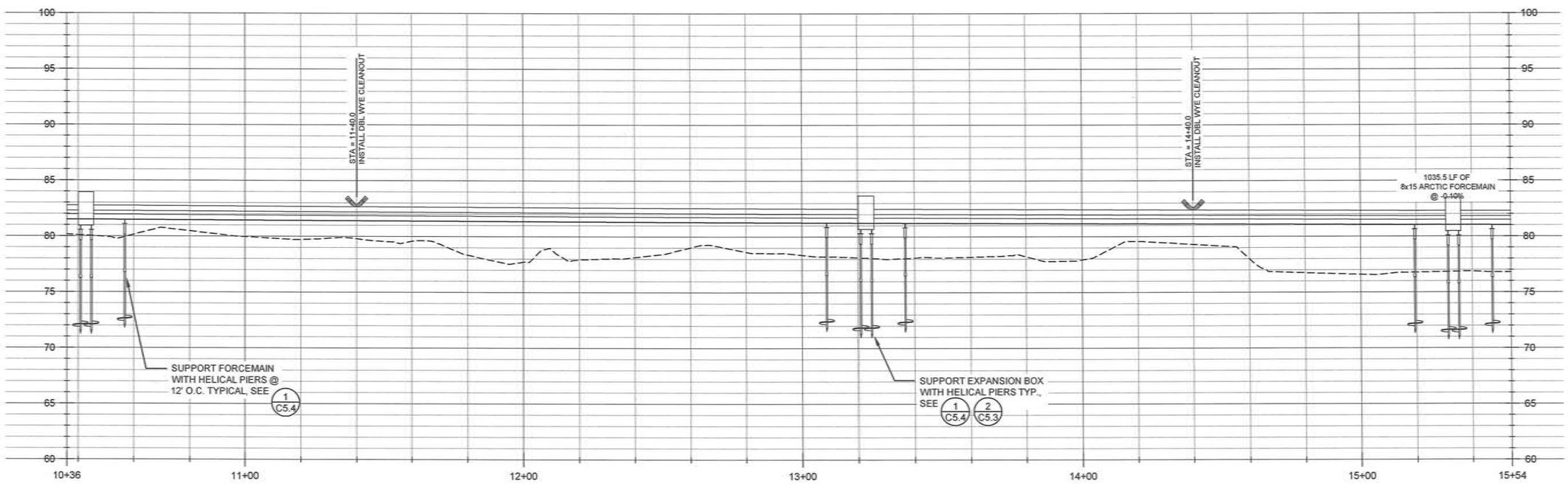

RECORD DRAWING CERTIFICATE

THESE DRAWINGS REFLECT RECORDED INFORMATION OBTAINED DURING CONSTRUCTION. INFORMATION PROVIDED HEREIN IS ACCURATE TO THE BEST OF MY KNOWLEDGE.

NAME DATE

SCALE:

BAR IS ONE INCH ON ORIGINAL DRAWING 0 1"

IF NOT ONE INCH ON THIS SHEET, ADJUST SCALE ACCORDINGLY

CONSTRUCTION RECORD
FIELD BOOK
STAKING
FOREMAN
AS-BUILT
INSPECTOR

STATE OF ALASKA 49TH Michael R. Eckman No.8262 REGISTERED PROFESSIONAL ENGINEER

FACULTATIVE LAGOON

PLAN AND PROFILE

CHEFORNAK, ALASKA

CE2 ENGINEERS, INC.
PO BOX 232948 ANCHORAGE, AK 99523 PH: 907-349-1019 FAX: 907-349-1015

REVISION	BY	DATE
REVISED PER 65% COMMENTS	CM	1/2014

Project No. ____
Date JAN. 2014
Designed ____
Drawn CM
Approved ____

Sheet No.
C2.3

G:\ACAD\CHEFORNAK\CYF1101 Sewage Lagoon\C2.1 Plan and Profiles.dwg, 1/15/2014 3:53:12 PM, cmerz, \\Ce2main\LANIER MP C2050/LD520C PCL 6

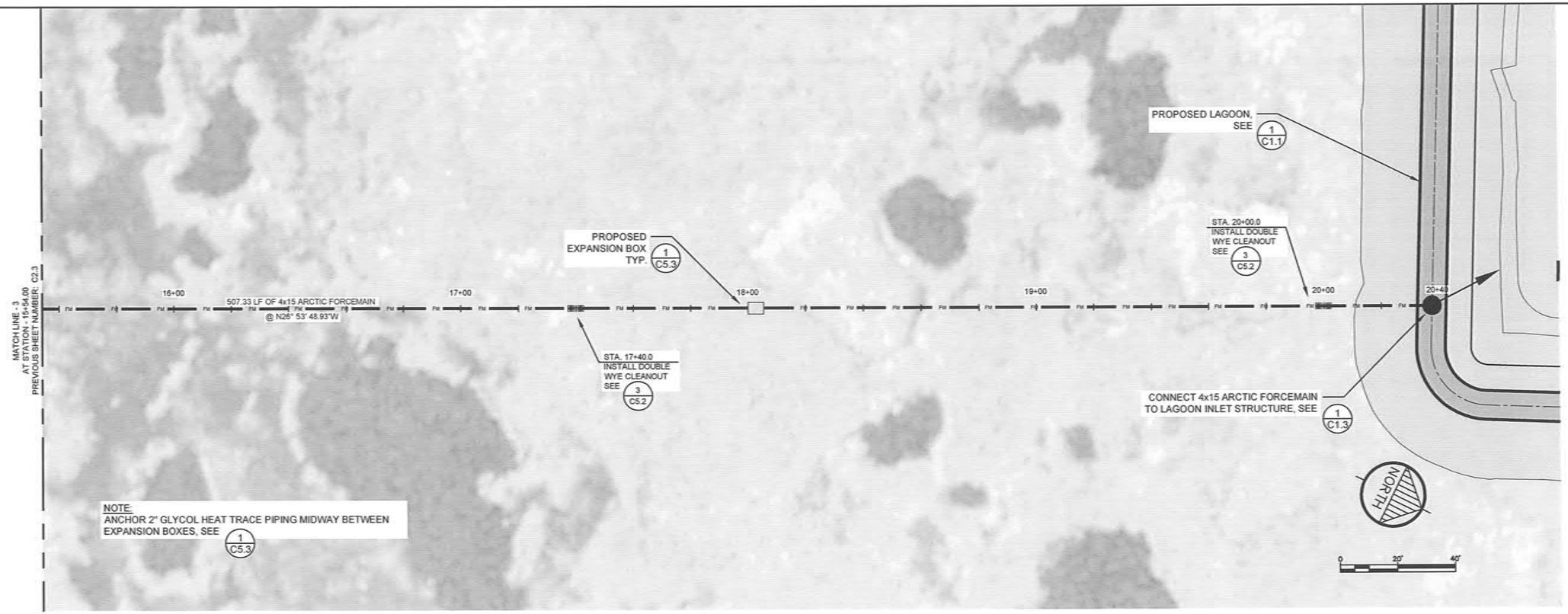

NOTE: ELEVATIONS SHOWN ARE AT BOTTOM OF ARCTIC PIPE JACKET (TOP OF PIPE SUPPORT BEAM)

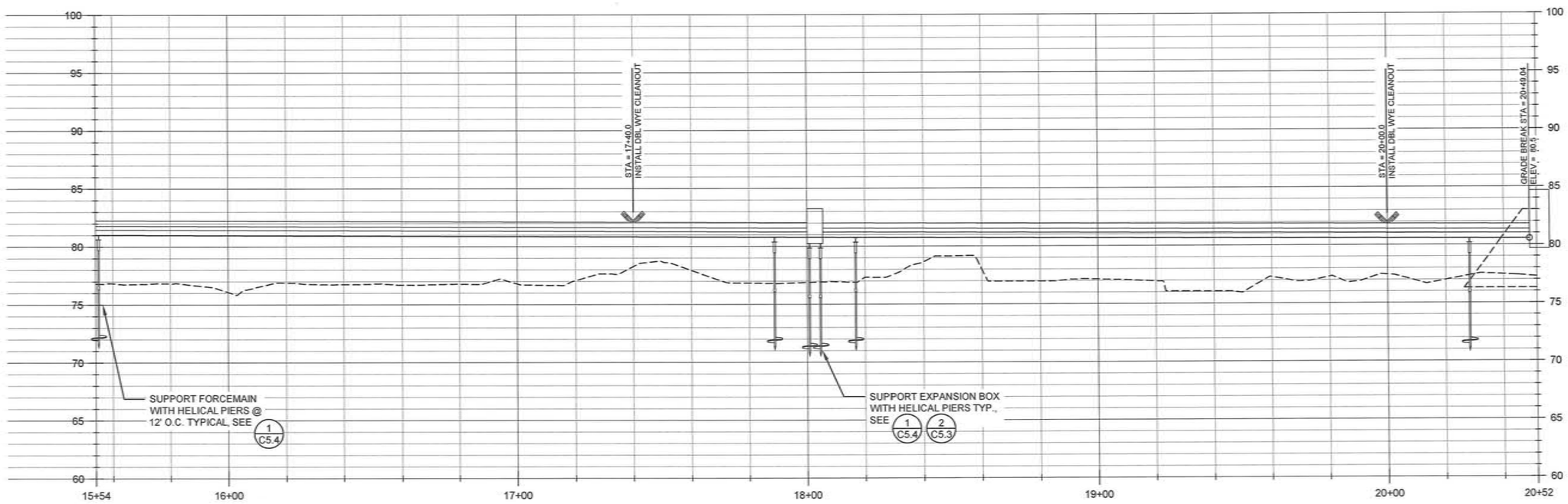

RECORD DRAWING CERTIFICATE

THESE DRAWINGS REFLECT RECORDED INFORMATION OBTAINED DURING CONSTRUCTION. INFORMATION PROVIDED HEREIN IS ACCURATE TO THE BEST OF MY KNOWLEDGE.

NAME DATE

SCALE:

BAR IS ONE INCH ON ORIGINAL DRAWING

0 1"

IF NOT ONE INCH ON THIS SHEET, ADJUST SCALES ACCORDINGLY

CONSTRUCTION RECORD

FIELD BOOK

STAKING

FOREMAN

AS-BUILT

INSPECTOR

STATE OF ALASKA 49TH REGISTERED PROFESSIONAL ENGINEER Michael R. Coleman No. 8652

FACULTATIVE LAGOON

PLAN AND PROFILE

CHEFORNAK, ALASKA

CE2 ENGINEERS, INC.

PO BOX 232048 ANCHORAGE, AK 99523 PH: 907-349-1010 FAX: 907-349-1015

REVISION	BY	DATE
REVISED PER 65% COMMENTS	CM	1/2014

Project No. ____

Date JAN. 2014

Designed ____

Drawn CM

Approved ____

Sheet No.

C2.4

G:\ACAD\CHEFORNAK\CYF1101 Sewage Lagoon\C2.1 Plan and Profiles.dwg, 1/15/2014 3:49:31 PM, cmerz, \\Ce2main\LANIER MP C2050/LD520C PCL 6

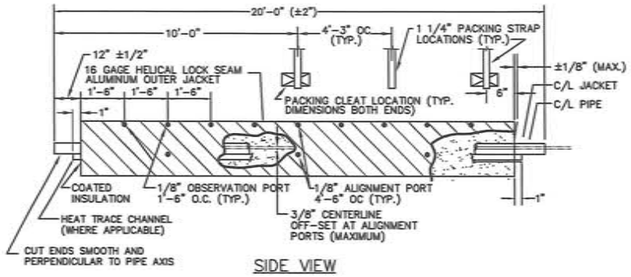

SIDE VIEW

NOTES:

1. D=INSERTION DEPTH OF BELL END GASKETED COUPLING +1 7/8"

INNER CORE PIPE/OUTER JACKET SCHEDULE		
NOMINAL CORE PIPE DIA.	INNER CORE PIPE O.D.	NOMINAL OUTER JACKET DIA.
4 INCH	4.50"	15 INCH
8 INCH	8.625"	18 INCH

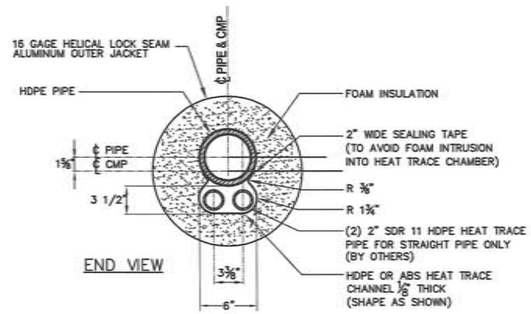

END VIEW

1 / C5.1 4" X 15"- 6" X 15" HDPE ARCTIC PIPE CROSS SECTION - GLYCOL TRACED

1 1/2"=1'-0"

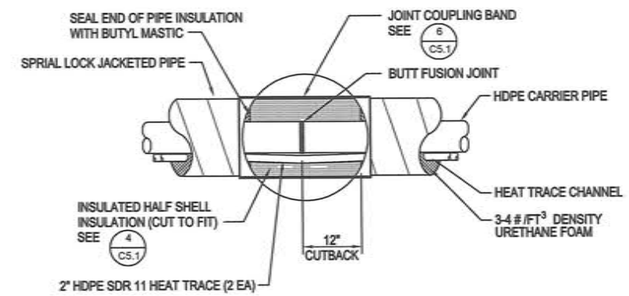

2 / C5.1 TYPICAL BUTT FUSION JOINT

NTS

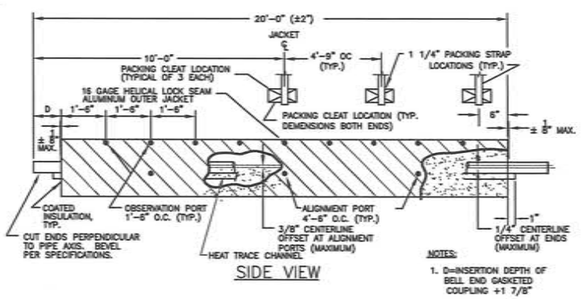

SIDE VIEW

NOTES:

1. D=INSERTION DEPTH OF BELL END GASKETED COUPLING +1 7/8"

INNER CORE PIPE / OUTER JACKET SCHEDULE		
NOMINAL INSULATED PIPE	INNER CORE PIPE O.D.	NOMINAL OUTER JACKETING
8 INCH	8.625"	15 INCH

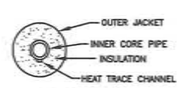

END VIEW

3 / C5.1 8" X 15" HDPE ARCTIC PIPE W/ HEAT TRACE CHANNEL

1 1/2"=1'-0"

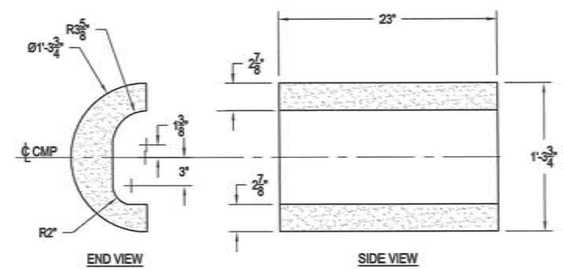

END VIEW

SIDE VIEW

5 / C5.1 6" X 15" HDPE ARCTIC PIPE HALF SHELL - GLYCOL TRACED

1 1/2"=1'-0"

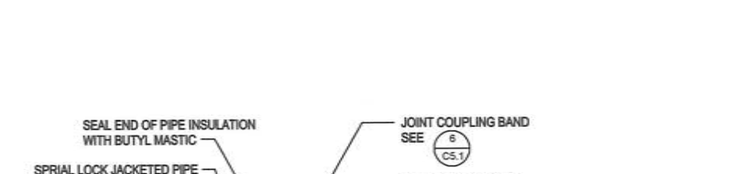

BAND LENGTH L	# OF BOLTS EA.	BOLT SPACING S	EDGE DISTANCE D
36"	4	9	4½"

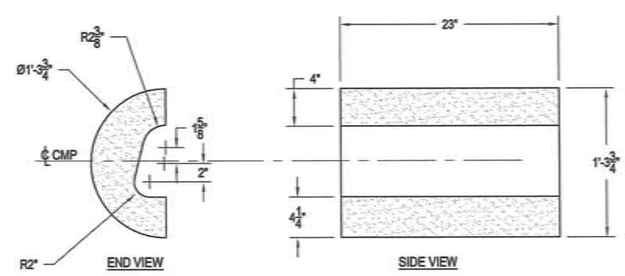

END VIEW

SIDE VIEW

4 / C5.1 4" X 15" HDPE ARCTIC PIPE HALF SHELL - GLYCOL TRACED

1 1/2"=1'-0"

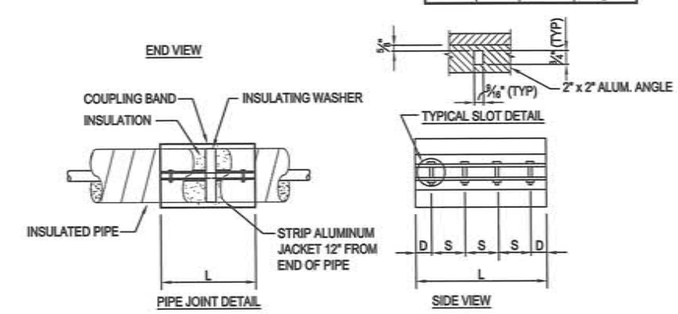

6 / C5.1 ARCTIC PIPE COUPLING BAND

NTS

RECORD DRAWING CERTIFICATE

THESE DRAWINGS REFLECT RECORDED INFORMATION OBTAINED DURING CONSTRUCTION. INFORMATION PROVIDED HEREIN IS ACCURATE TO THE BEST OF MY KNOWLEDGE.

NAME DATE

SCALE: AS SHOWN

BAR IS ONE INCH ON ORIGINAL DRAWING 0 1"

IF NOT ONE INCH ON THIS SHEET, ADJUST SCALES ACCORDINGLY

CONSTRUCTION RECORD

FIELD BOOK

STAKING

FOREMAN

AS-BUILT

INSPECTOR

STATE OF ALASKA 49TH REGISTERED PROFESSIONAL ENGINEER Michael R. Erdman No.6352

FACULTATIVE LAGOON

ARTIC PIPE DETAILS

CHEFORNAK, ALASKA

CE2 ENGINEERS, INC.

PO BOX 232948 ANCHORAGE, AK 99523 PH: 907-349-1010 FAX: 907-349-1015

REVISION	BY	DATE
REVISED PER 65% COMMENTS	CM	1/2014

Project No. ____ Date JAN. 2014 Designed MRE Drawn DDR Approved MRE

Sheet No. C5.1

G:\ACAD\CHEFORNAK\CYF1101 Sewage Lagoon\C5.1 ARCTIC PIPE DETAILS rev 2.dwg, 1/15/2014 4:45:08 PM, cmerz, \\Ce2main\LANIER MP C2050/LD520C PCL 6

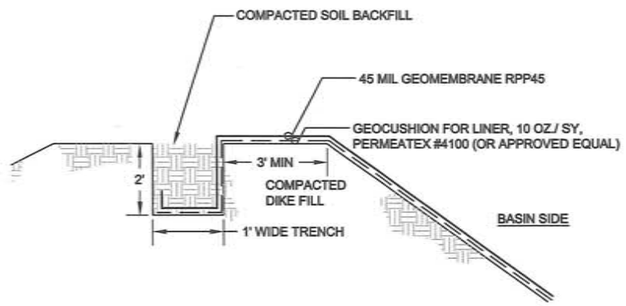

1 C5.2 LINER KEY DETAIL
SCALE: NTS

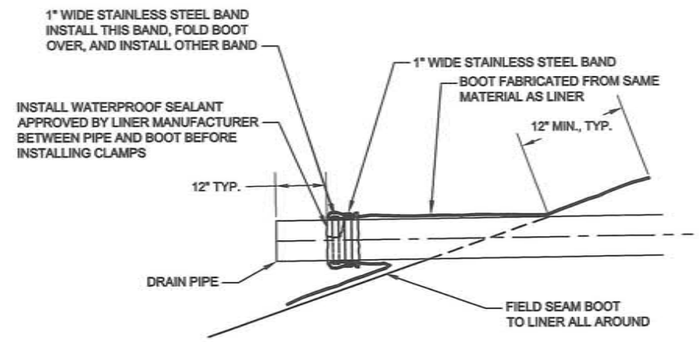

2 C5.2 BOOT DETAIL
SCALE: NTS

DOUBLE COMBO WYE TABLE		
NOMINAL SIZE	CORE PIPE O.D.	NOM. OUTER JACKET O.D.
4"	4.5"	15"

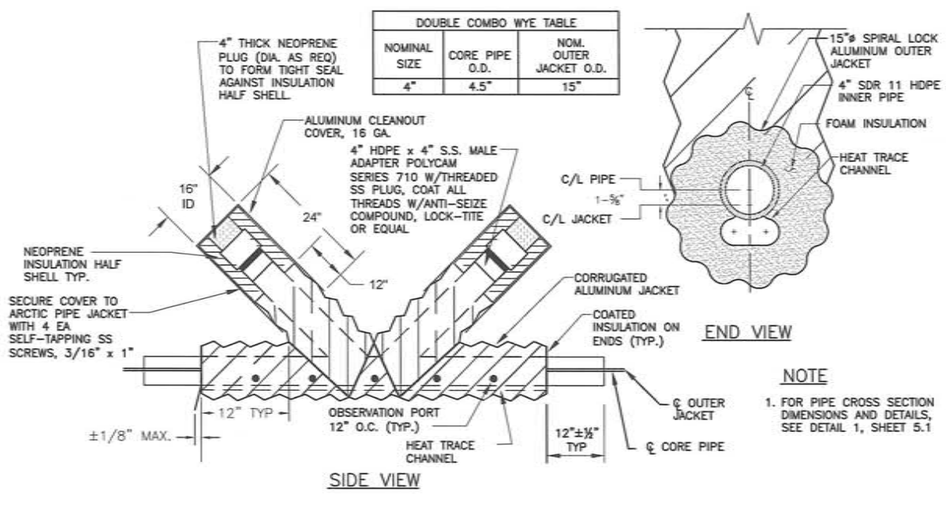

NOTE

1. FOR PIPE CROSS SECTION DIMENSIONS AND DETAILS, SEE DETAIL 1, SHEET 5.1

3 C5.2 4" X 15" HDPE ARCTIC PIPE ABOVE GROUND FORCEMAIN DOUBLE WYE CLEANOUT DETAILS
SCALE: NTS

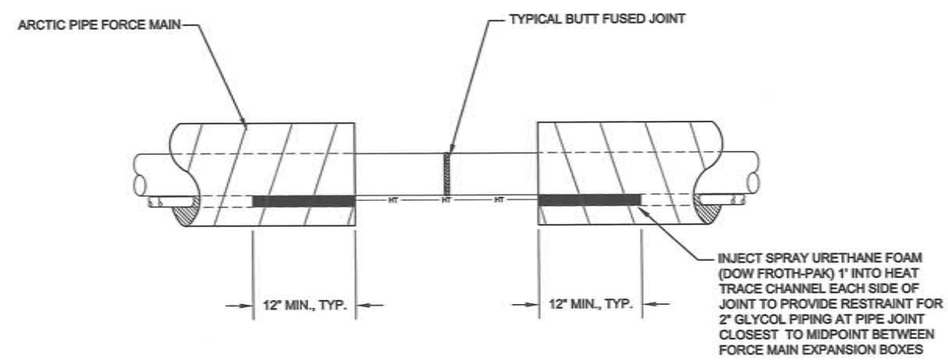

4 C5.2 4" X 15" HDPE ARCTIC PIPE ABOVE GROUND FORCEMAIN MIDPOINT EXPANSION RESTRAINT
SCALE: NTS

RECORD DRAWING CERTIFICATE
THESE DRAWINGS REFLECT RECORDED INFORMATION OBTAINED DURING CONSTRUCTION. INFORMATION PROVIDED HEREIN IS ACCURATE TO THE BEST OF MY KNOWLEDGE.
NAME DATE

SCALE:
BAR IS ONE INCH ON ORIGINAL DRAWING
0 1"
IF NOT ONE INCH ON THIS SHEET, ADJUST SCALE ACCORDINGLY

CONSTRUCTION RECORD
FIELD BOOK
STAKING
FOREMAN
AS-BUILT
INSPECTOR

STATE OF ALASKA 49TH
Michael R. Eotman No.8252
REGISTERED PROFESSIONAL ENGINEER

FACULTATIVE LAGOON
LAGOON AND FORCE MAIN DETAILS
CHEFORNAK, ALASKA

CE2 ENGINEERS, INC.
PO BOX 230246 ANCHORAGE, AK 99523 PH: 907-349-1010 FAX: 907-349-1015

REVISION	BY	DATE
REVISED PER 65% COMMENTS	CM	1/2014

Project No. ____
Date JAN. 2014
Designed MRE
Drawn RZ
Approved MRE

Sheet No.
C5.2

G:\ACAD\CHEFORNAK\CYF1101 Sewage Lagoon\C5.2 LAGOON_FORCEMAIN DETAILS.dwg, 1/15/2014 4:47:11 PM, cmerz, \\Ce2main\LANIER MP C2050/LD520C PCL 6

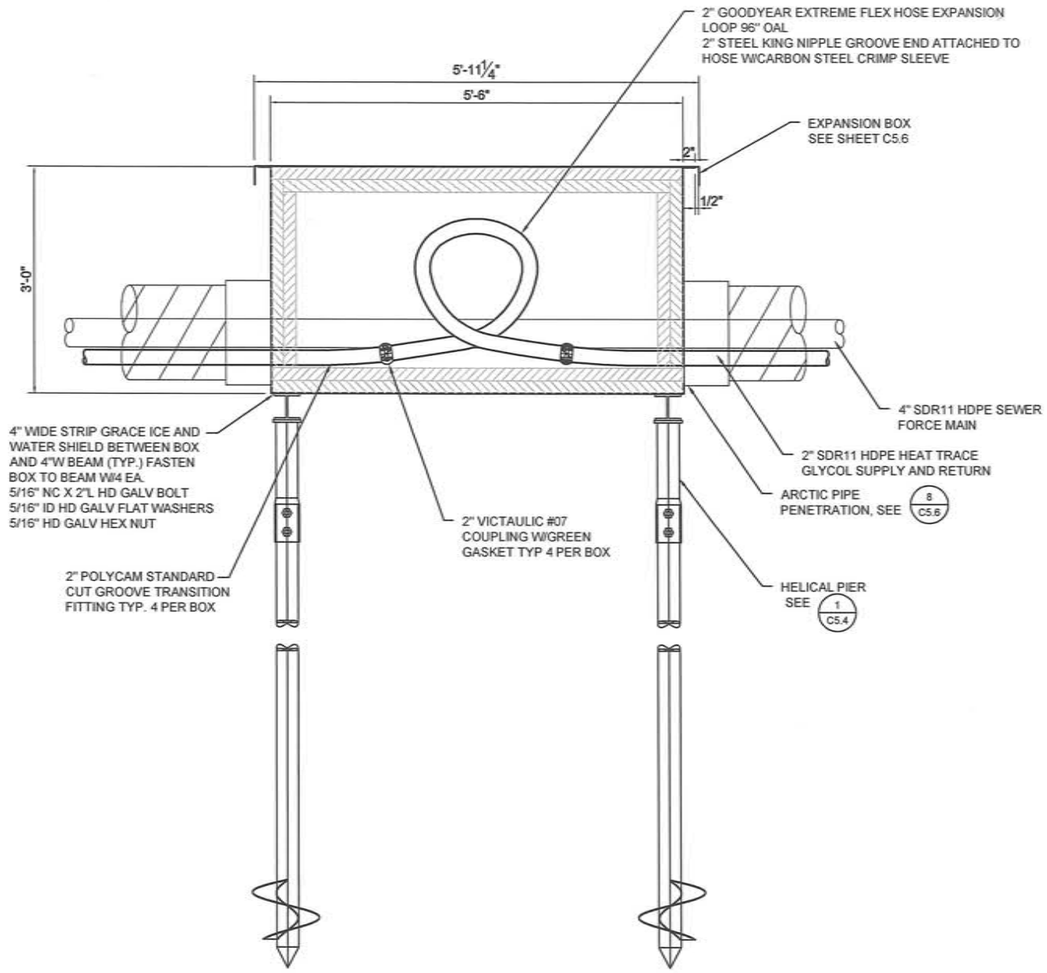

1 C5.3 EXPANSION BOX ELEVATION
1" = 2'-0"

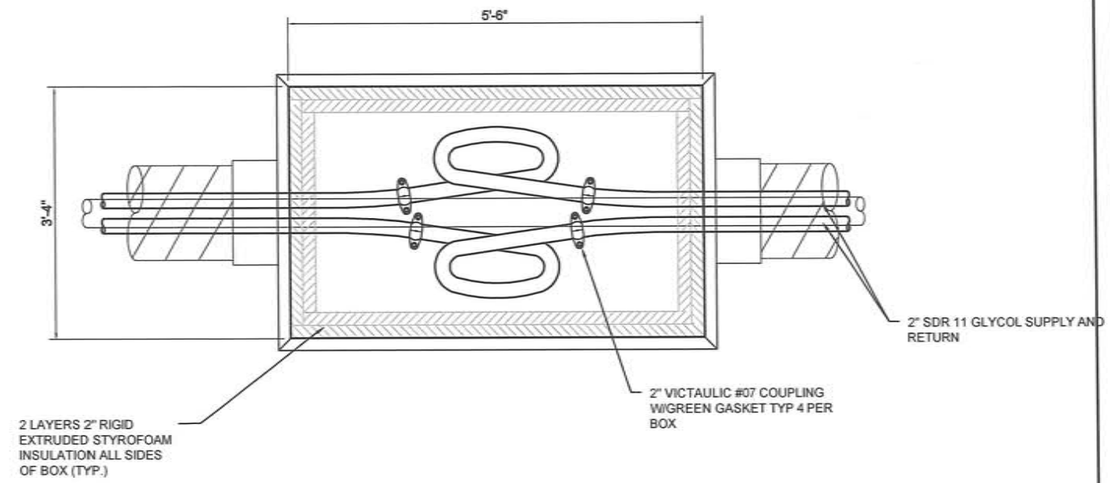

2 C5.3 EXPANSION BOX PLAN
1" = 2'-0"

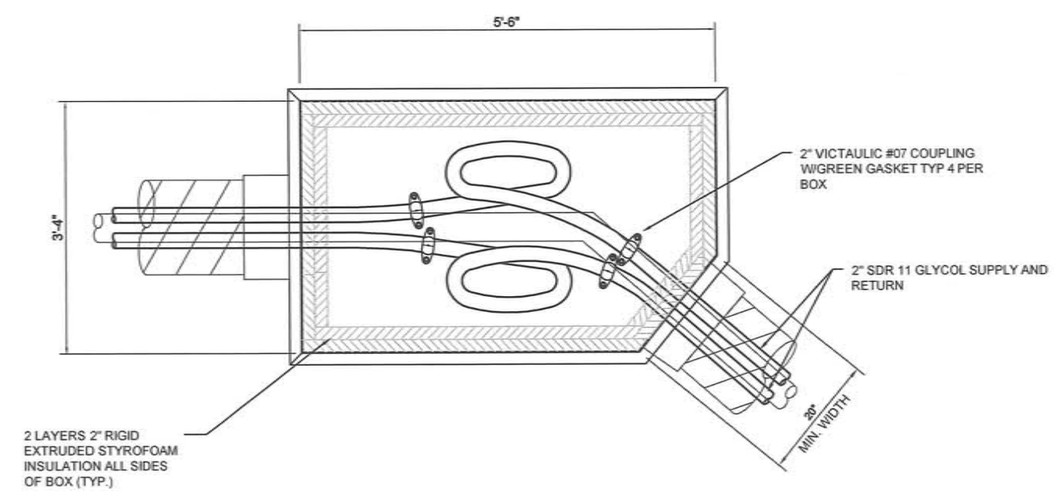

3 C5.3 EXPANSION BOX WITH ANGLED POINT - PLAN
1" = 2'-0"

RECORD DRAWING CERTIFICATE
THESE DRAWINGS REFLECT RECORDED INFORMATION OBTAINED DURING CONSTRUCTION. INFORMATION PROVIDED HEREIN IS ACCURATE TO THE BEST OF MY KNOWLEDGE.
NAME DATE

SCALE: AS SHOWN
BAR IS ONE INCH ON ORIGINAL DRAWING
IF NOT ONE INCH ON THIS SHEET, ADJUST SCALES ACCORDINGLY

CONSTRUCTION RECORD
FIELD BOOK
STAKING
FOREMAN
AS-BUILT
INSPECTOR

STATE OF ALASKA 49TH Michael R. Erdman No.6252 REGISTERED PROFESSIONAL ENGINEER

FACULTATIVE LAGOON
EXPANSION BOX AND DETAILS
CHEFORNAK, ALASKA

CE2 ENGINEERS, INC.
PO BOX 232946 ANCHORAGE, AK 99523 PH: 907-349-1010 FAX: 907-349-1015

REVISION	BY	DATE
REVISED PER 65% COMMENTS	CM	1/2014

Project No.
Date JAN. 2014
Designed DWB/LAP
Drawn DWB
Approved PCW

Sheet No. C5.3

G:\ACAD\CHEFORNAK\CYF1101 Sewage Lagoon\C5.3 EXPANSION BOX.dwg, 1/15/2014 4:46:57 PM, cmerz, \\Ce2main\LANIER MP C2050/LD520C PCL 6

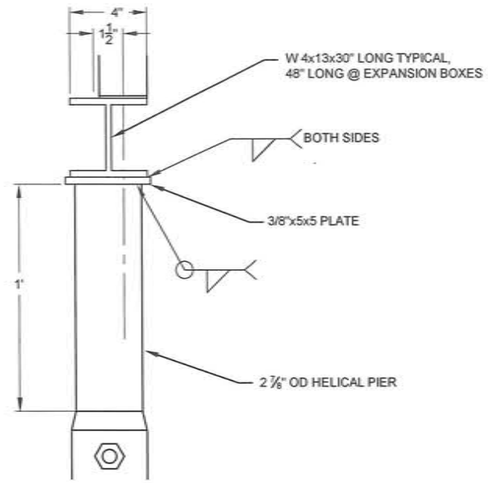

1 C5.4 PIPE / EXPANSION BOX SUPPORT END VIEW
SCALE: NTS

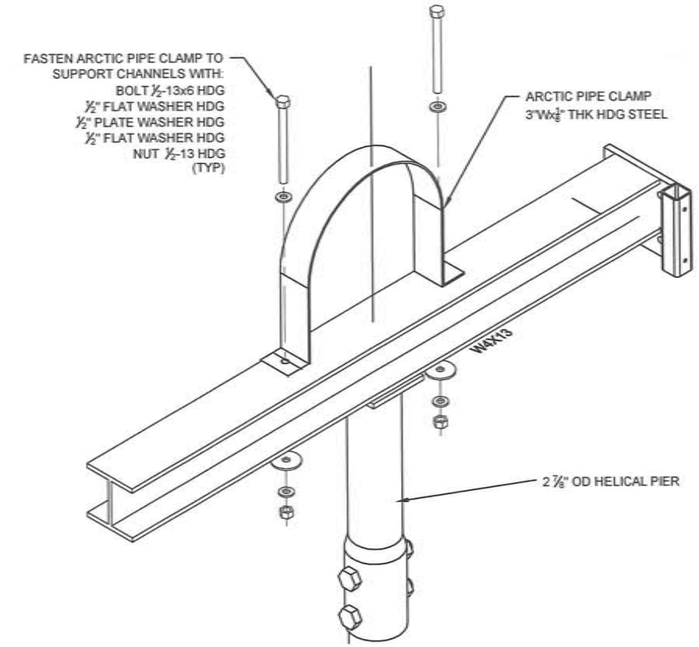

2 C5.4 PIPE SUPPORT ASSEMBLY ISOMETRIC
SCALE: NTS

NOTE

WHEN INSTALLING ANCHORS, DRIVE UNTIL 8,000 FT-LB IS MEASURED. ADD EXTENSION SHAFTS AS REQUIRED. DEPTH TO FROZEN GROUND IS HIGHLY VARIABLE ALONG PIPELINE ROUTE. MIN. 8' EMBEDMENT.

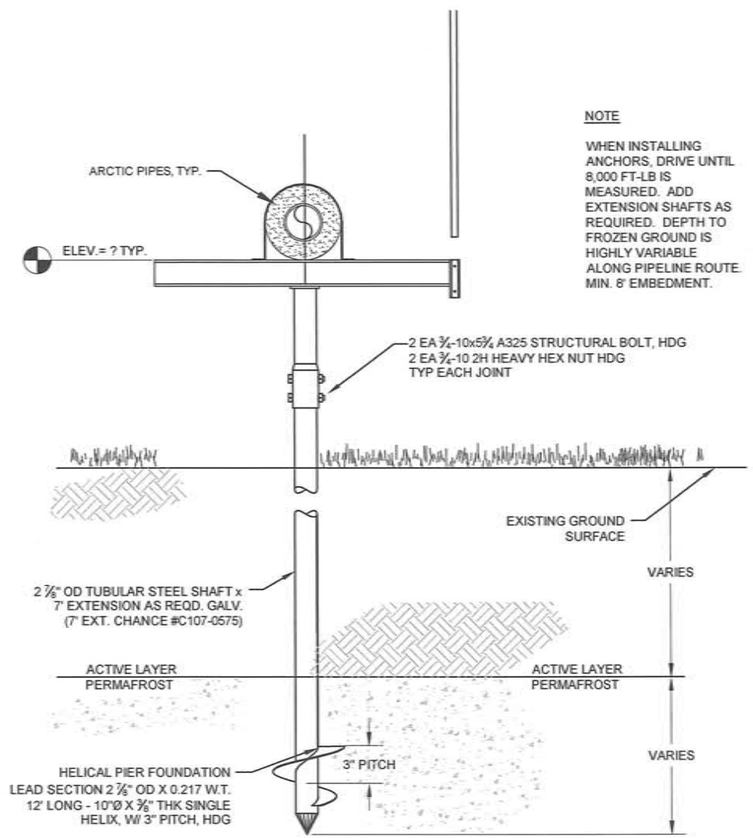

3 C5.4 PIPE / EXPANSION BOX HELICAL PIER DETAIL
SCALE: NTS

NOTE

PLACE MARKER POLES AND BRACKETS ON ENDS OF PIPE SUPPORT RUNS, INSIDE AND OUTSIDE OF DIRECTIONAL CHANGES IN ALIGNMENT, AND APPROX. 48' INTERVALS ON STRAIGHT RUNS. PLACE CLOSER AS LOCAL CONDITIONS NECESSITATE.

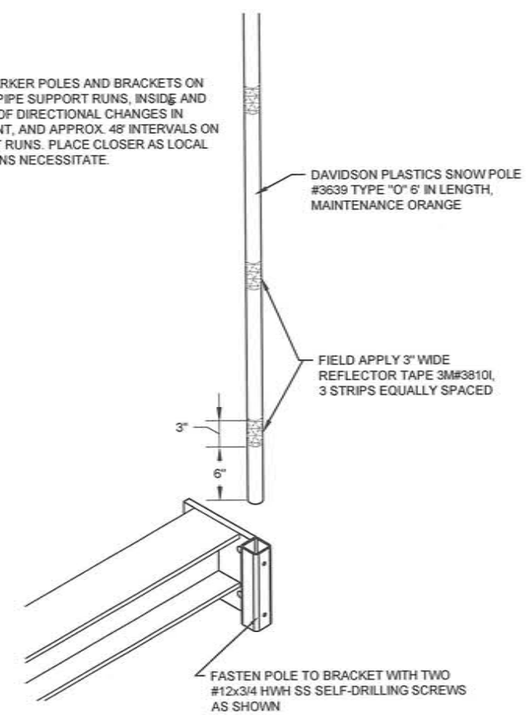

4 C5.4 SNOW POLE ASSEMBLY ISOMETRIC
SCALE: NTS

RECORD DRAWING CERTIFICATE
THESE DRAWINGS REFLECT RECORDED INFORMATION OBTAINED DURING CONSTRUCTION. INFORMATION PROVIDED HEREIN IS ACCURATE TO THE BEST OF MY KNOWLEDGE.
NAME DATE

SCALE: AS SHOWN
BAR IS ONE INCH ON ORIGINAL DRAWING 0 1"
IF NOT ONE INCH ON THIS SHEET, ADJUST SCALES ACCORDINGLY

CONSTRUCTION RECORD
FIELD BOOK
STAKING
FOREMAN
AS-BUILT
INSPECTOR

STATE OF ALASKA 49TH Michael R. Eirtman No.6262 REGISTERED PROFESSIONAL ENGINEER

FACULTATIVE LAGOON
ARTIC PIPE HELICAL PIER SUPPORT DETAILS
CHEFORNAK, ALASKA

CE2 ENGINEERS, INC.
PO BOX 222948 ANCHORAGE, AK 99503 PH: 907-349-1010 FAX: 907-349-1015

REVISION	BY	DATE
REVISED PER 65% COMMENTS	CM	1/2014

Project No. ____
Date JAN. 2014
Designed MRE
Drawn DDR
Approved MRE

Sheet No.
C5.4

G:\ACAD\CHEFORNAK\CYF1101 Sevage Lagoon\C5.4 HELICAL PIERS.dwg, 1/15/2014 4:46:47 PM, cmerz, \\Ce2main\LANIER MP C2050/LD520C PCL 6

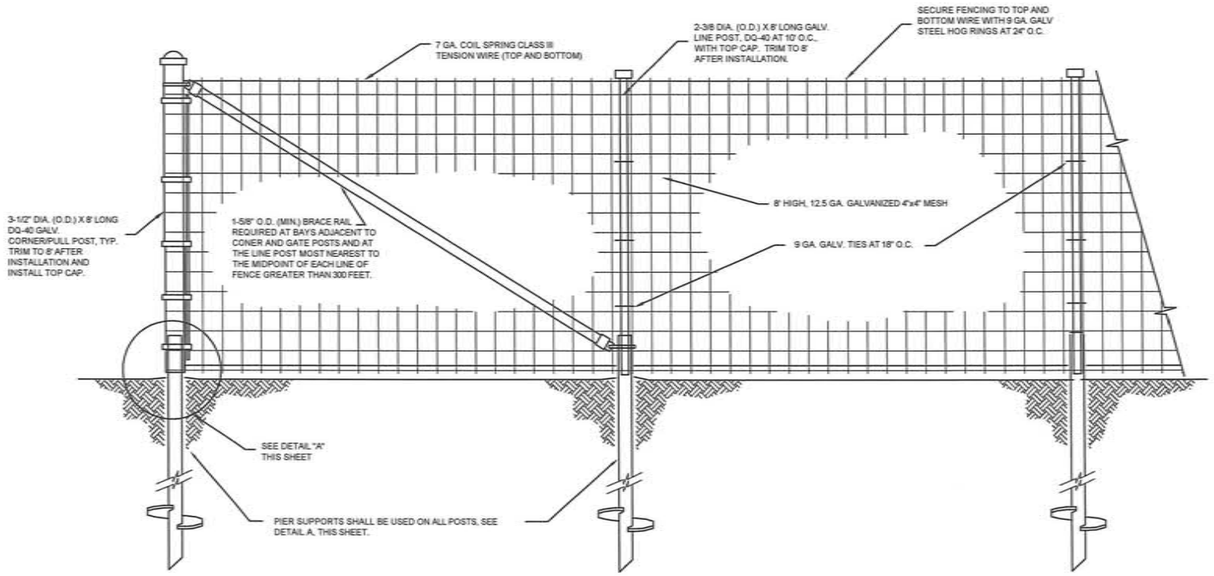

1 FENCE DETAIL (AT CORNER)

SCALE: NONE

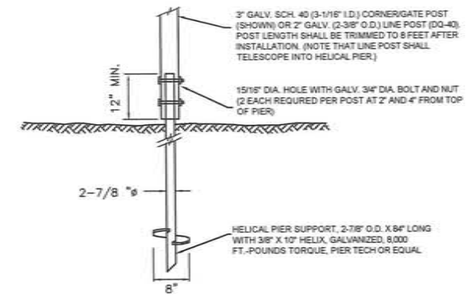

DETAIL A - FENCE POST SUPPORT

NTS

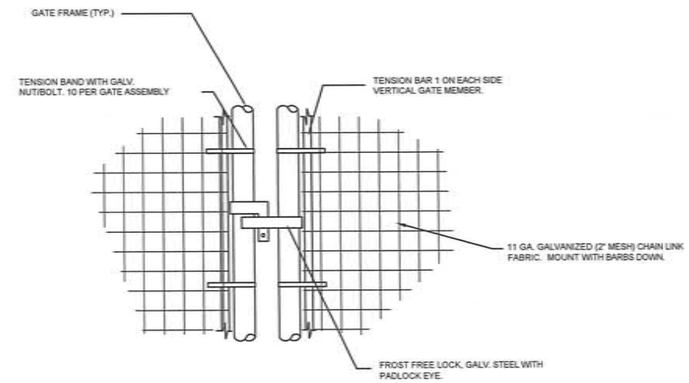

DETAIL B - GATE LATCH DETAIL

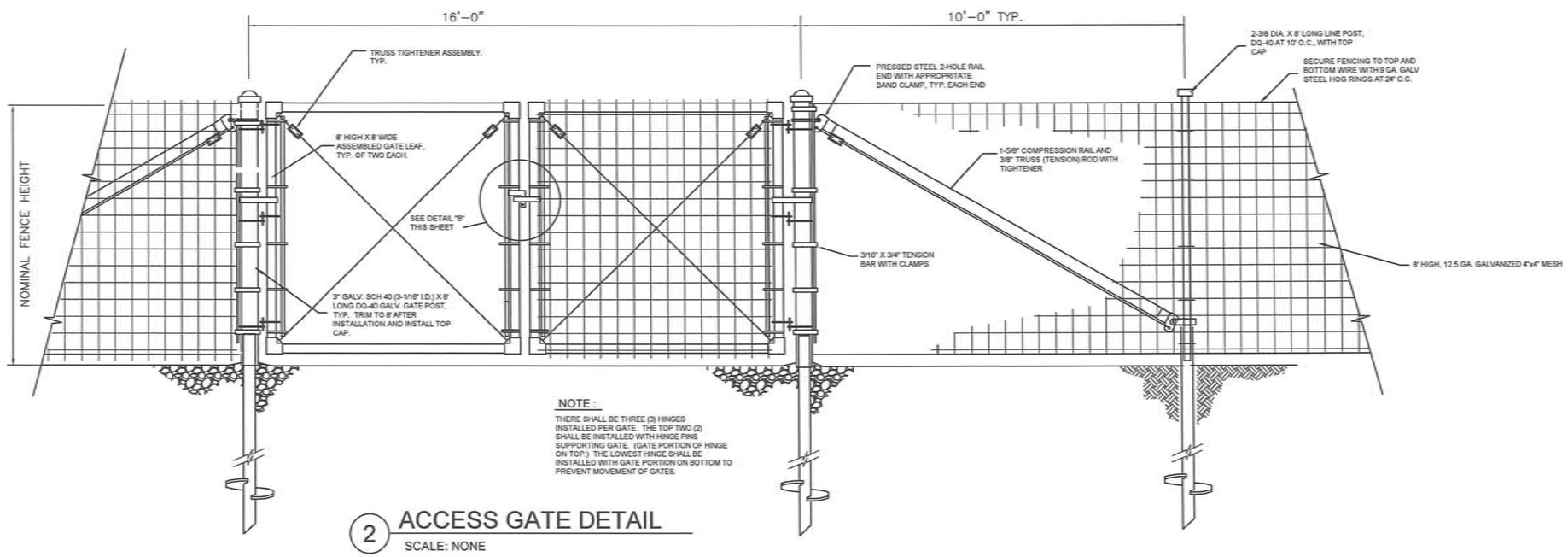

NOTE :

THERE SHALL BE THREE (3) HINGES INSTALLED PER GATE. THE TOP TWO (2) SHALL BE INSTALLED WITH HINGE PINS SUPPORTING GATE. (GATE PORTION OF HINGE ON TOP.) THE LOWEST HINGE SHALL BE INSTALLED WITH GATE PORTION ON BOTTOM TO PREVENT MOVEMENT OF GATES.

2 ACCESS GATE DETAIL

SCALE: NONE

RECORD DRAWING CERTIFICATE

THESE DRAWINGS REFLECT RECORDED INFORMATION OBTAINED DURING CONSTRUCTION. INFORMATION PROVIDED HEREIN IS ACCURATE TO THE BEST OF MY KNOWLEDGE.

NAME DATE

SCALE: AS SHOWN

BAR IS ONE INCH ON ORIGINAL DRAWING 0 1"

IF NOT ONE INCH ON THIS SHEET, ADJUST SCALE ACCORDINGLY

CONSTRUCTION RECORD

FIELD BOOK

STAKING

FOREMAN

AS-BUILT

INSPECTOR

STATE OF ALASKA 49TH REGISTERED PROFESSIONAL ENGINEER Michael R. Eerman No.6262

FACULTATIVE LAGOON

FENCING DETAILS

CHEFORNAK, ALASKA

CE2 ENGINEERS, INC.

PO BOX 232048 ANCHORAGE, AK 99523 PH: 907-349-1015 FAX: 907-349-1015

REVISION	BY	DATE
REVISED PER 65% COMMENTS	CM	1/2014

Project No. ____

Date JAN. 2014

Designed PCW

Drawn CM

Approved PCW

Sheet No. C5.5

G:\ACAD\CHEFORNAK\CYF1101 Sewage Lagoon\C5.5 FENCE DETAILS.dwg, 1/15/2014 4:46:35 PM, cmerz, \\Ce2main\LANIER MP C2050/LD520C PCL 6

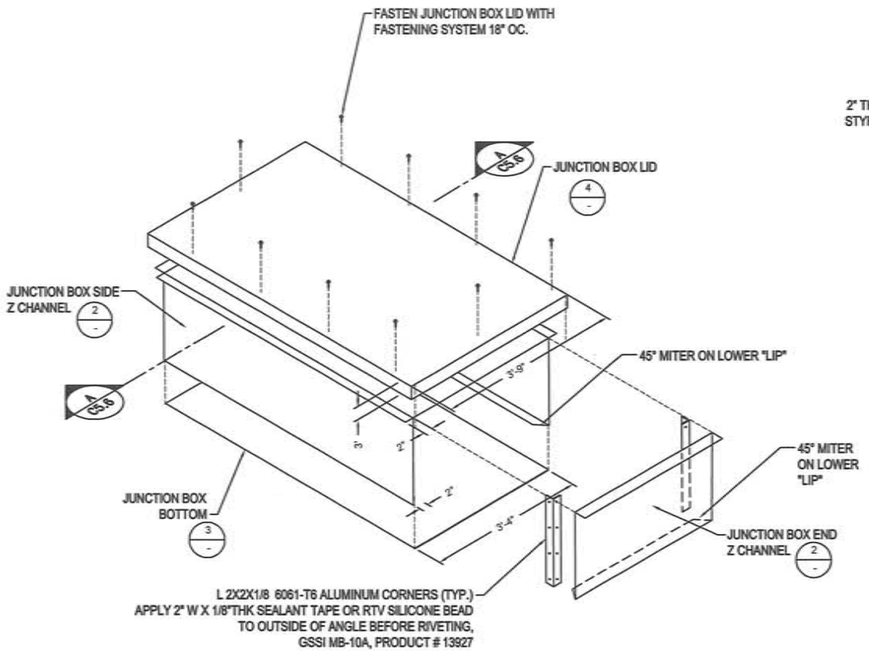

1 C5.6 JUNCTION BOX ISOMETRIC NTS

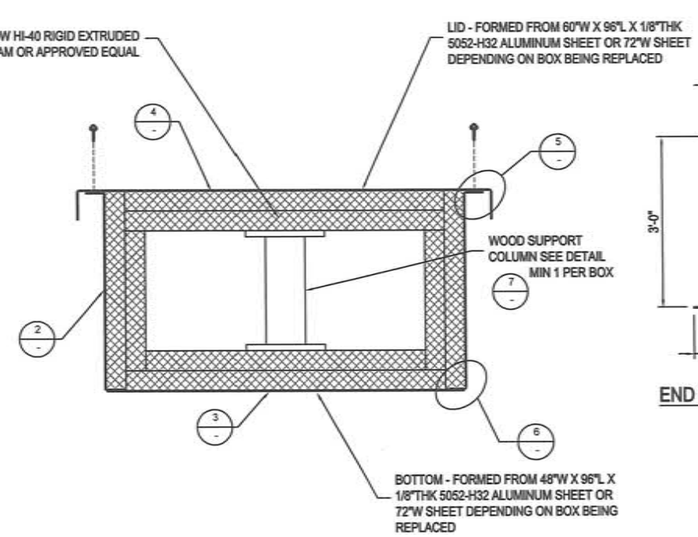

A C5.6 JUNCTION BOX SECTION NTS

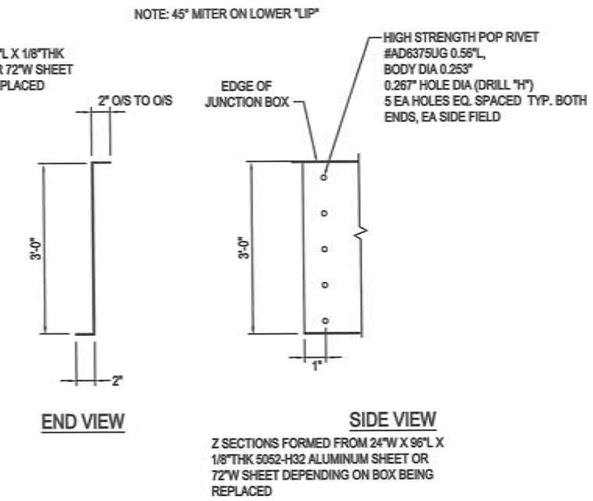

2 C5.6 SIDE & END Z-CHANNEL DETAILS NTS

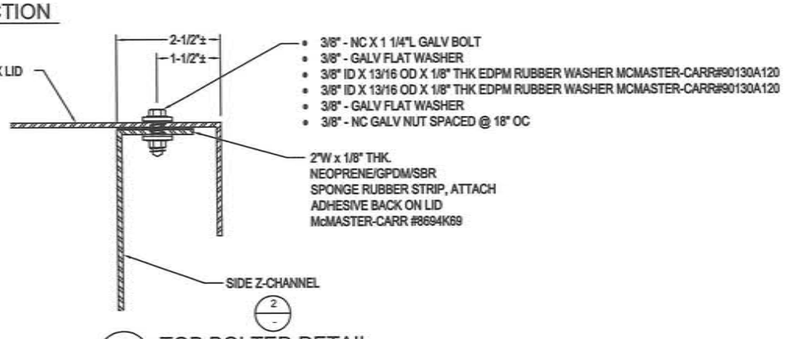

5 C5.6 TOP BOLTED DETAIL NTS

NOTE:

1. ALL ALUMINUM SHALL BE 5052-H32 1/8" THICK, UNLESS OTHERWISE NOTED.
2. BOTTOM OF JUNCTION BOX WILL BE SEALED w/ 2"W X 1/8" THK SEALANT TAPE, GSSI MB-10A, PRODUCT #13927, OR RTV SILICONE BEAD
3. FOR FORCE MAIN ANGLE POINT JUNCTION BOXES, CHAMFER ONE END OF THE BOX AS SHOWN ON DETAIL3, SHEET C5.3

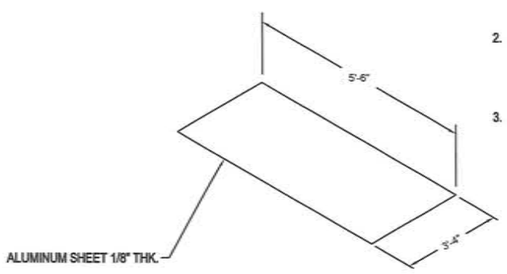

3 C5.6 BOTTOM SHEET DETAIL NTS

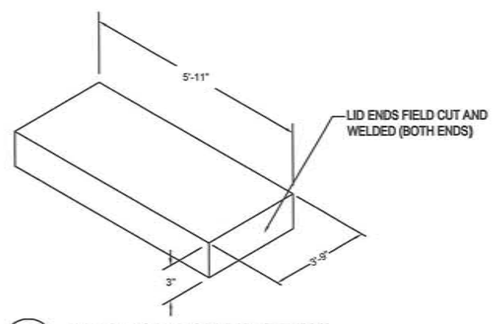

4 C5.6 JUNCTION BOX LID DETAIL NTS

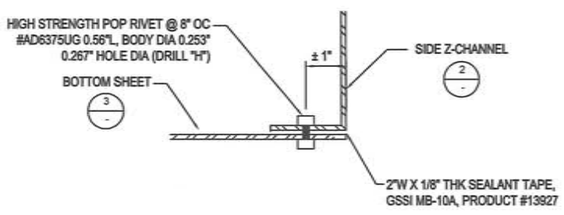

6 C5.6 BASE SEAM DETAIL NTS

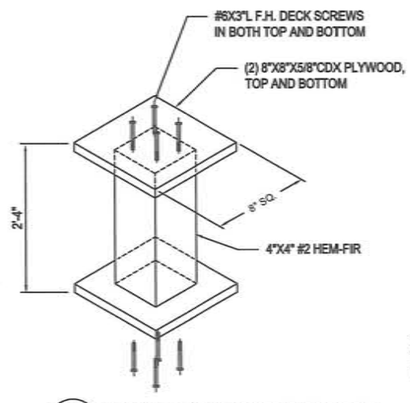

7 C5.6 WOOD SUPPORT COLUMN NTS

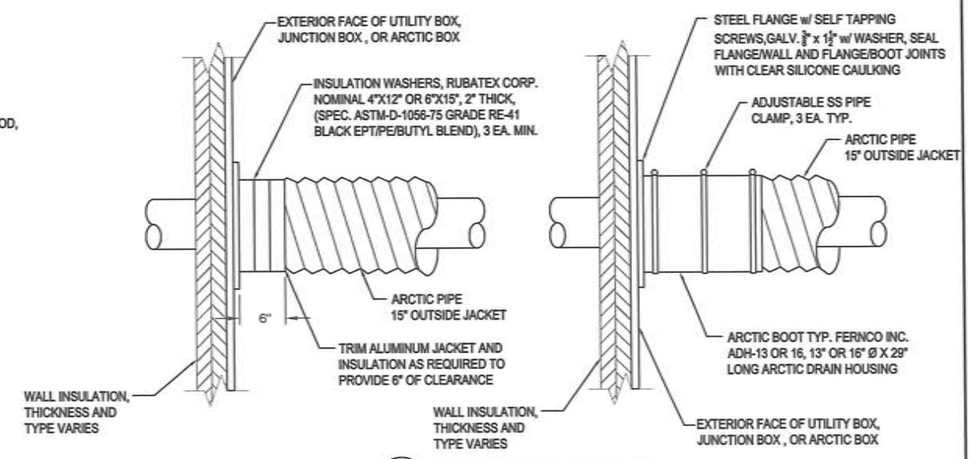

8 C5.6 PENETRATION DETAIL NTS

RECORD DRAWING CERTIFICATE
THESE DRAWINGS REFLECT RECORDED INFORMATION OBTAINED DURING CONSTRUCTION. INFORMATION PROVIDED HEREIN IS ACCURATE TO THE BEST OF MY KNOWLEDGE.
NAME DATE

SCALE: AS SHOWN
BAR IS ONE INCH ON ORIGINAL DRAWING
0 1"
IF NOT ONE INCH ON THIS SHEET, ADJUST SCALES ACCORDINGLY

CONSTRUCTION RECORD
FIELD BOOK
STAKING
FOREMAN
AS-BUILT
INSPECTOR

STATE OF ALASKA 49TH REGISTERED PROFESSIONAL ENGINEER Michael R. Eidman No.6352

FACULTATIVE LAGOON
JUNCTION BOX ASSEMBLY DETAILS
CHEFORNAK, ALASKA

CE2 ENGINEERS, INC.
PO BOX 223948 ANCHORAGE, AK 99503 PH: 907-349-1010 FAX: 907-349-1015

REVISION	BY	DATE
REVISED PER 65% COMMENTS	CM	1/2014

Project No. ____
Date JAN. 2014
Designed PCW
Drawn LAW
Approved PCW

Sheet No. C5.6

G:\ACAD\CHEFORNAK\CYF1101 Sewage Lagoon\C5.6 Junction Box Details.dwg, 1/15/2014 4:45:19 PM, cmerz, \\Ce2main\ANIER MP C2050/LD520C PCL 6

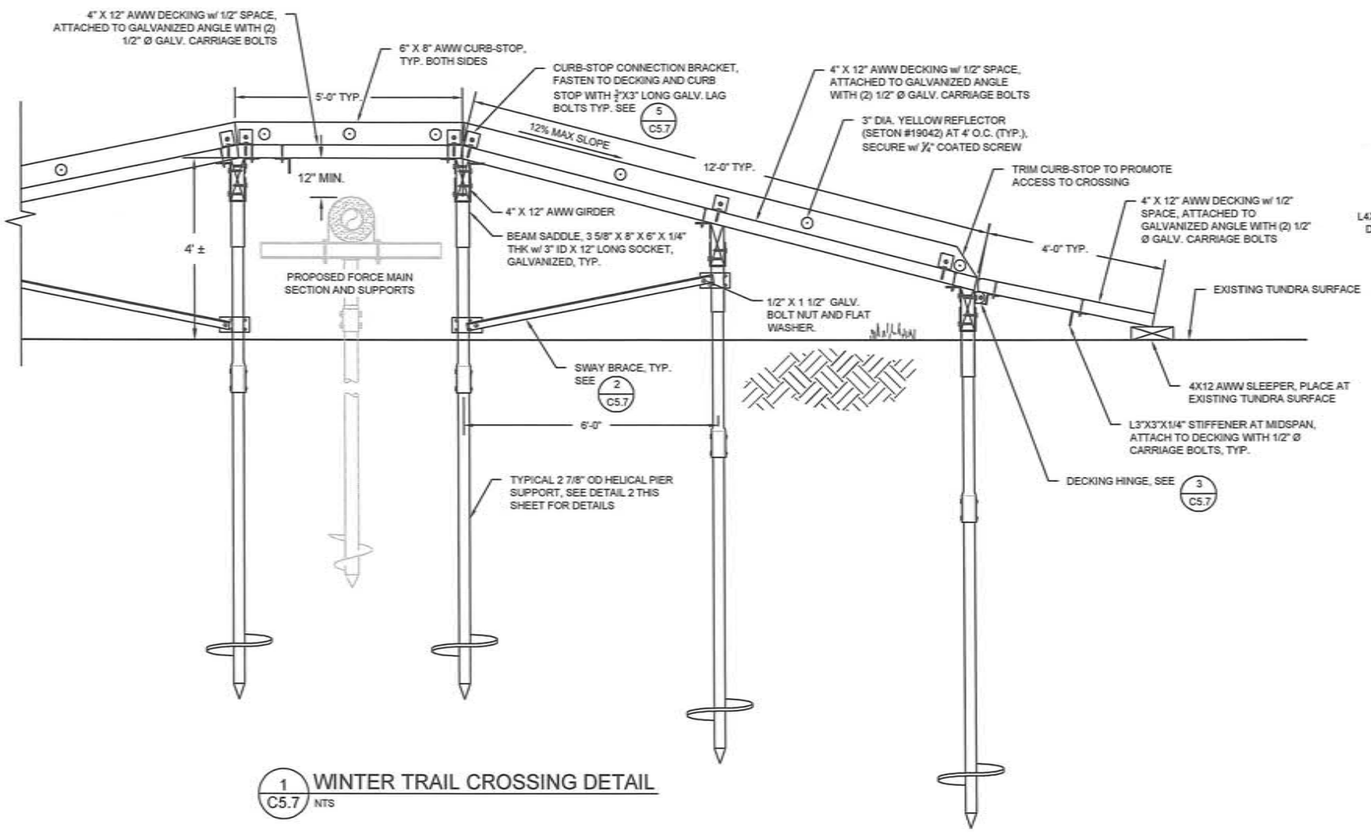

1 C5.7 WINTER TRAIL CROSSING DETAIL
NTS

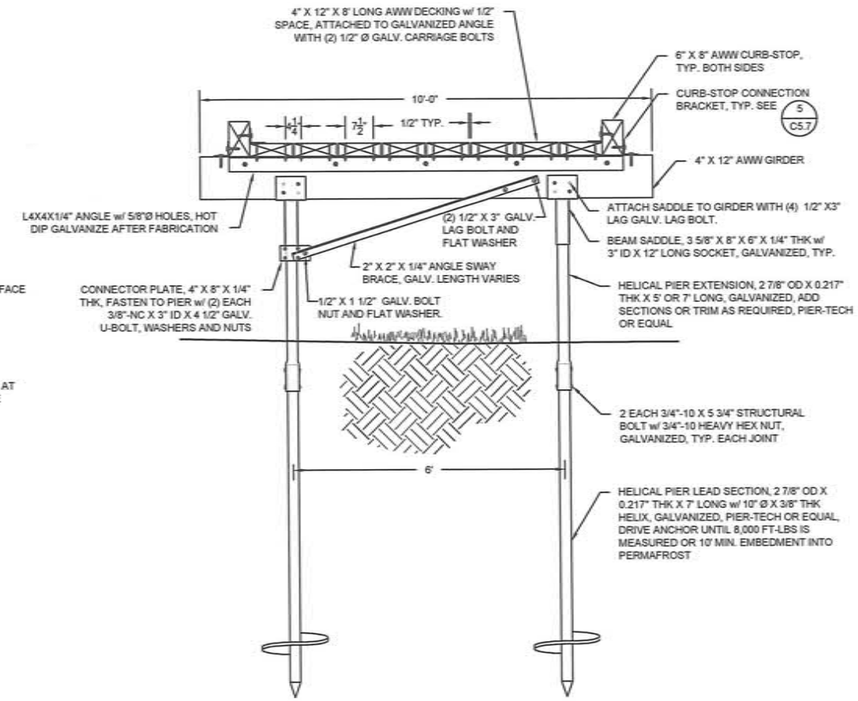

2 C5.7 WINTER TRAIL CROSSING SECTION
NTS

NOTES:

1. INSTALL HELICAL PIER SUPPORTS 6' O.C. AS REQUIRED TO MAINTAIN 1:12 MAX SLOPE TO EXISTING TUNDRA SURFACE.
2. HOT DIP GALVANIZE ALL ANGLES AND STIFFENERS AFTER FABRICATION.

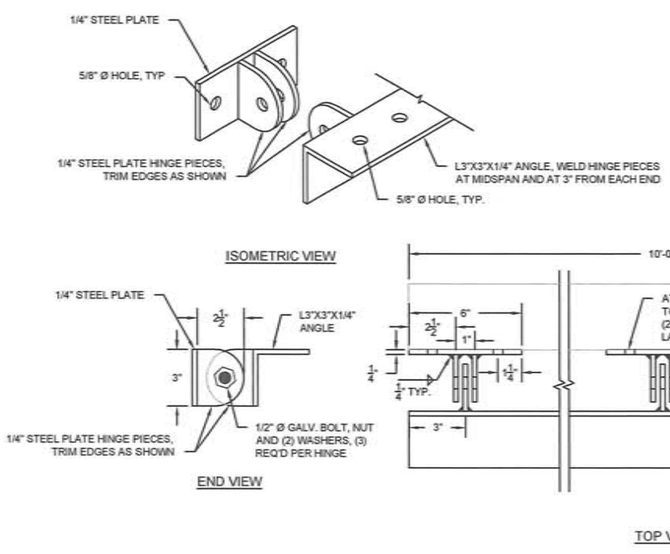

3 C5.7 DECKING HINGE DETAIL
NTS

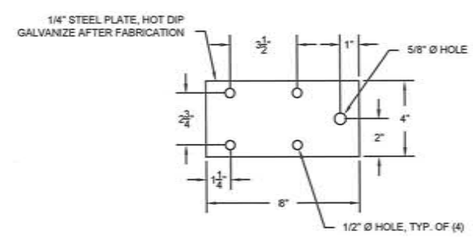

4 C5.7 CONNECTOR PLATE DETAIL
3"=1'-0"

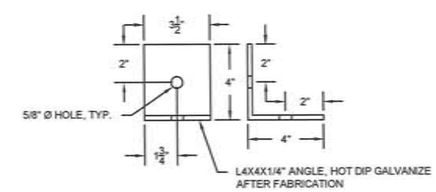

5 C5.7 CURB-STOP BRACKET DETAIL
3"=1'-0"

RECORD DRAWING CERTIFICATE
THESE DRAWINGS REFLECT RECORDED INFORMATION OBTAINED DURING CONSTRUCTION. INFORMATION PROVIDED HEREIN IS ACCURATE TO THE BEST OF MY KNOWLEDGE.
NAME DATE

SCALE: AS SHOWN
BAR IS ONE INCH ON ORIGINAL DRAWING 0 1"
IF NOT ONE INCH ON THIS SHEET ADJUST SCALES ACCORDINGLY

CONSTRUCTION RECORD
FIELD BOOK
STAKING
FOREMAN
AS-BUILT
INSPECTOR

STATE OF ALASKA 49TH REGISTERED PROFESSIONAL ENGINEER Michael R. Erdman No.6252

FACULTATIVE LAGOON
WINTER TRAIL CROSSING DETAILS
CHEFORNAK, ALASKA

CE2 ENGINEERS, INC.
PO BOX 230948 ANCHORAGE, AK 99523 PH: 907-349-1010 FAX: 907-349-1015

REVISION	BY	DATE
REVISED PER 65% COMMENTS	CM	1/2014

Project No. ____
Date JAN. 2014
Designed DWB
Drawn DWB
Approved LAP

Sheet No. C5.7

G:\ACAD\CHEFORNAK\CYF1101 Sewage Lagoon\C5.7_WINTER TRAIL CROSSING.dwg, 1/15/2014 4:47:29 PM, cmerz, \\Ce2main\LANIER MP C2050/LD520C PCL 6