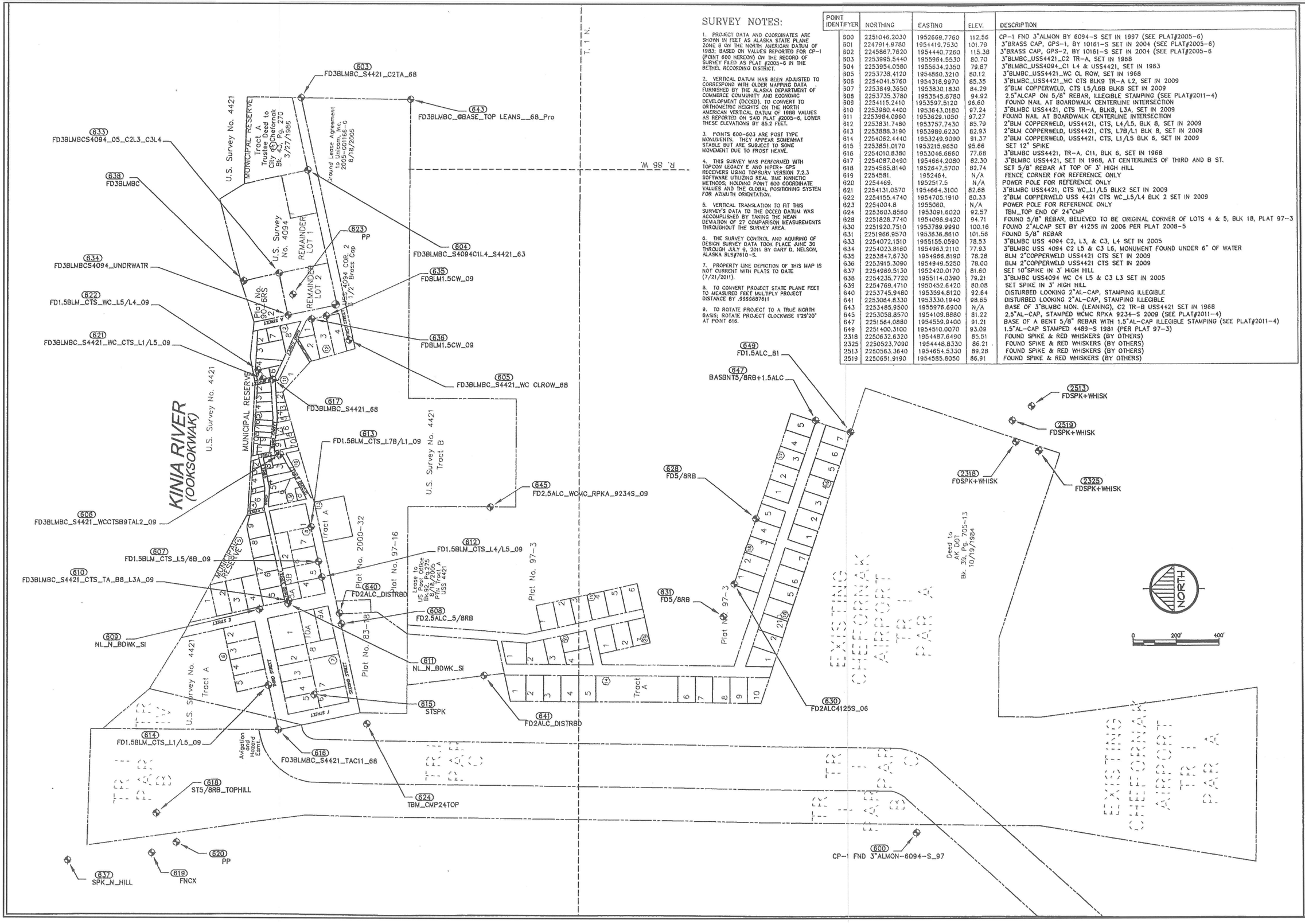

SURVEY NOTES:

1. PROJECT DATA AND COORDINATES ARE SHOWN IN FEET AS ALASKA STATE PLANE ZONE 8 ON THE NORTH AMERICAN DATUM OF 1983; BASED ON VALUES REPORTED FOR CP-1 (POINT 600 HEREON) ON THE RECORD OF SURVEY FILED AS PLAT #2005-6 IN THE BETHEL RECORDING DISTRICT.

2. VERTICAL DATUM HAS BEEN ADJUSTED TO CORRESPOND WITH OLDER MAPPING DATA FURNISHED BY THE ALASKA DEPARTMENT OF COMMERCE COMMUNITY AND ECONOMIC DEVELOPMENT (DCCED). TO CONVERT TO ORTHOMETRIC HEIGHTS ON THE NORTH AMERICAN VERTICAL DATUM OF 1988 VALUES AS REPORTED ON SAID PLAT #2005-6, LOWER THESE ELEVATIONS BY 85.2 FEET.

3. POINTS 600-603 ARE POST TYPE MONUMENTS. THEY APPEAR SOMEWHAT STABLE BUT ARE SUBJECT TO SOME MOVEMENT DUE TO FROST HEAVE.

4. THIS SURVEY WAS PERFORMED WITH TOPCON LEGACY E AND HIPER+ GPS RECEIVERS USING TOPSURV VERSION 7.2.3 SOFTWARE UTILIZING REAL TIME KINNETIC METHODS; HOLDING POINT 600 COORDINATE VALUES AND THE GLOBAL POSITIONING SYSTEM FOR AZIMUTH ORIENTATION.

5. VERTICAL TRANSLATION TO FIT THIS SURVEY'S DATA TO THE DCCED DATUM WAS ACCOMPLISHED BY TAKING THE MEAN DEVIATION OF 27 COMPARISON MEASUREMENTS THROUGHOUT THE SURVEY AREA.

6. THE SURVEY CONTROL AND AQUIRING OF DESIGN SURVEY DATA TOOK PLACE JUNE 30 THROUGH JULY 9, 2011 BY GARY D. NELSON, ALASKA RLS#7610-S.

7. PROPERTY LINE DEPICTION OF THIS MAP IS NOT CURRENT WITH PLATS TO DATE (7/21/2011).

8. TO CONVERT PROJECT STATE PLANE FEET TO MEASURED FEET MULTIPLY PROJECT DISTANCE BY .9999687611

9. TO ROTATE PROJECT TO A TRUE NORTH BASIS; ROTATE PROJECT CLOCKWISE 1°29'20" AT POINT 616.

POINT IDENTIFYER	NORTHING	EASTING	ELEV.	DESCRIPTION
600	2251046.2030	1952669.7760	112.56	CP-1 FND 3"ALMON BY 6094-S SET IN 1997 (SEE PLAT#2005-6)
601	2247914.9780	1954419.7530	101.79	3"BRASS CAP, GPS-1, BY 10161-S SET IN 2004 (SEE PLAT#2005-6)
602	2245867.7620	1954440.7260	115.38	3"BRASS CAP, GPS-2, BY 10161-S SET IN 2004 (SEE PLAT#2005-6
603	2253995.5440	1955964.5530	80.70	3"BLMBC_USS4421_C2 TR-A, SET IN 1968
604	2253954.0580	1955634.2350	79.87	3"BLMBC_USS4094_C1 L4 & USS4421, SET IN 1963
605	2253738.4120	1954880.3210	80.12	3"BLMBC_USS4421_WC CL ROW, SET IN 1968
606	2254041.5760	1954318.9970	85.35	3"BLMBC_USS4421_WC CTS BLK9 TR-A L2, SET IN 2009
607	2253849.3650	1953830.1830	84.29	2"BLM COPPERWELD, CTS L5/L6B BLK8 SET IN 2009
608	2253735.3780	1953545.8780	94.92	2.5"ALCAP ON 5/8" REBAR, ILLEGIBLE STAMPING (SEE PLAT#2011-4)
609	2254115.2410	1953597.5120	96.60	FOUND NAIL AT BOARDWALK CENTERLINE INTERSECTION
610	2253980.4400	1953643.0180	97.24	3"BLMBC USS4421, CTS TR-A, BLK8, L3A, SET IN 2009
611	2253984.0960	1953629.1050	97.27	FOUND NAIL AT BOARDWALK CENTERLINE INTERSECTION
612	2253831.7480	1953757.7430	85.79	2"BLM COPPERWELD, USS4421, CTS, L4/L5, BLK 8, SET IN 2009
613	2253888.3190	1953989.6230	82.93	2"BLM COPPERWELD, USS4421, CTS, L7B/L1 BLK 8, SET IN 2009
614	2254062.4440	1953249.9090	91.37	2"BLM COPPERWELD, USS4421, CTS, L1/L5 BLK 6, SET IN 2009
615	2253851.0170	1953215.9650	95.66	SET 12" SPIKE
616	2254010.8380	1953046.6660	77.68	3"BLMBC USS4421, TR-A, C11, BLK 6, SET IN 1968
617	2254087.0490	1954664.2080	82.30	3"BLMBC USS4421, SET IN 1968, AT CENTERLINES OF THIRD AND B ST.
618	2254585.8140	1952647.5700	82.74	SET 5/8" REBAR AT TOP OF 3' HIGH HILL
619	2254581.	1952464.	N/A	FENCE CORNER FOR REFERENCE ONLY
620	2254469.	1952517.5	N/A	POWER POLE FOR REFERENCE ONLY
621	2254131.0570	1954664.3100	82.68	3"BLMBC USS4421, CTS WC_L1/L5 BLK2 SET IN 2009
622	2254155.4740	1954705.1910	80.33	2"BLM COPPERWELD USS 4421 CTS WC_L5/L4 BLK 2 SET IN 2009
623	2254004.8	1955060.	N/A	POWER POLE FOR REFERENCE ONLY
624	2253603.8560	1953091.6020	92.57	TBM_TOP END OF 24"CMP
628	2251828.7740	1954096.9420	94.71	FOUND 5/8" REBAR, BELIEVED TO BE ORIGINAL CORNER OF LOTS 4 & 5, BLK 18, PLAT 97-3
630	2251920.7510	1953789.9990	100.16	FOUND 2"ALCAP SET BY 4125S IN 2006 PER PLAT 2008-5
631	2251966.9570	1953636.8610	101.56	FOUND 5/8" REBAR
633	2254072.1510	1955155.0590	78.53	3"BLMBC USS 4094 C2, L3, & C3, L4 SET IN 2005
634	2254023.8160	1954963.2110	77.93	3"BLMBC USS 4094 C2 L5 & C3 L6, MONUMENT FOUND UNDER 6" OF WATER
635	2253847.6730	1954966.8190	78.28	BLM 2"COPPERWELD USS4421 CTS SET IN 2009
636	2253915.3090	1954949.5250	78.00	BLM 2"COPPERWELD USS4421 CTS SET IN 2009
637	2254969.5130	1952420.0170	81.60	SET 10"SPIKE IN 3' HIGH HILL
638	2254235.7720	1955114.0390	79.21	3"BLMBC USS4094 WC C4 L5 & C3 L3 SET IN 2005
639	2254769.4710	1950452.6420	80.08	SET SPIKE IN 3' HIGH HILL
640	2253745.9480	1953594.8120	92.64	DISTURBED LOOKING 2"AL-CAP, STAMPING ILLEGIBLE
641	2253084.8330	1953330.1940	98.65	DISTURBED LOOKING 2"AL-CAP, STAMPING ILLEGIBLE
643	2253485.9500	1955976.6900	N/A	BASE OF 3"BLMBC MON. (LEANING), C2 TR-B USS4421 SET IN 1968
645	2253058.8570	1954109.8880	81.22	2.5"AL-CAP, STAMPED WCMC RPKA 9234-S 2009 (SEE PLAT#2011-4)
647	2251564.0880	1954559.9400	91.21	BASE OF A BENT 5/8" REBAR WITH 1.5"AL-CAP ILLEGIBLE STAMPING (SEE PLAT#2011-4)
649	2251400.3100	1954510.0070	93.09	1.5"AL-CAP STAMPED 4489-S 1981 (PER PLAT 97-3)
2318	2250632.6320	1954487.6490	85.51	FOUND SPIKE & RED WHISKERS (BY OTHERS)
2325	2250523.7090	1954448.8330	86.21	FOUND SPIKE & RED WHISKERS (BY OTHERS)
2513	2250563.3640	1954654.5330	89.28	FOUND SPIKE & RED WHISKERS (BY OTHERS)
2519	2250651.9190	1954585.8050	86.91	FOUND SPIKE & RED WHISKERS (BY OTHERS)

RECORD DRAWING CERTIFICATE
THESE DRAWINGS REFLECT RECORDED INFORMATION OBTAINED DURING CONSTRUCTION. INFORMATION PROVIDED HEREIN IS ACCURATE TO THE BEST OF MY KNOWLEDGE.
NAME DATE

SCALE: AS SHOWN
BAR IS ONE INCH ON ORIGINAL DRAWING
0 1"
IF NOT ONE INCH ON THIS SHEET, ADJUST SCALES ACCORDINGLY

CONSTRUCTION RECORD
FIELD BOOK
STAKING
FOREMAN
AS-BUILT
INSPECTOR

STATE OF ALASKA 49TH LS-7610-S GARY D. NELSON

SURVEY CONTROL

CHEFORNAK, ALASKA

CE2 ENGINEERS, INC.
PO BOX 220548 ANCHORAGE, AK 99522 PH: 907-349-1010 FAX: 907-349-1015

REVISION	BY	DATE

Project No. ____
Date ____
Designed ____ CM
Drawn ____ CM
Approved ____ GN

Sheet No. C1.0

G:\ACAD\CHEFORNAK\2016 Washeteria and Water Tank\C1.0 SURVEY CONTROL.dwg, 6/15/2016 4:26:41 PM, cmerz, \\Ce2main\LANTER MP C2050/LD520C PCL 6

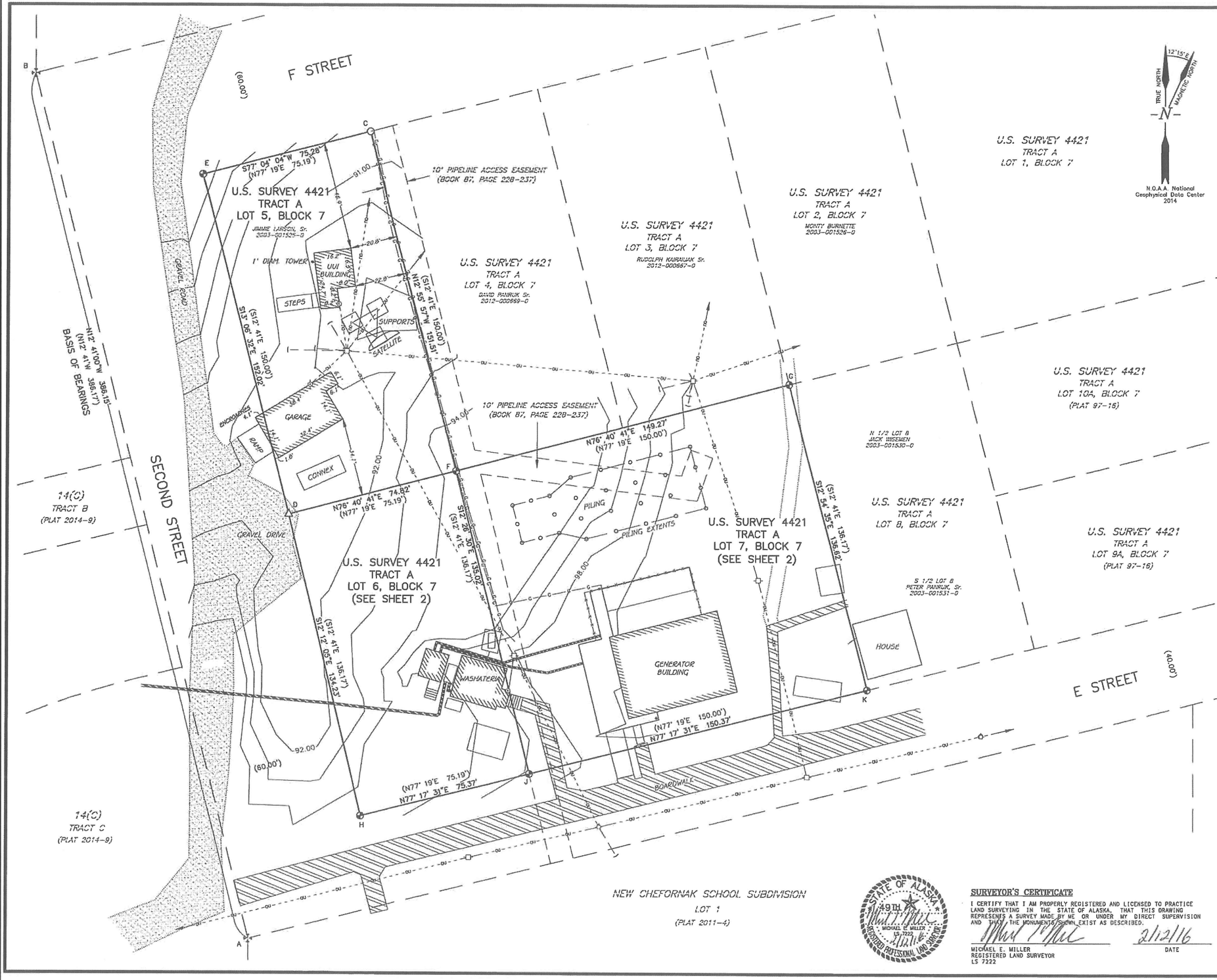

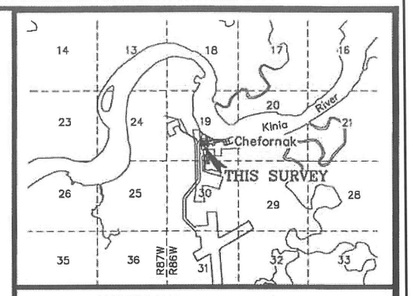

VICINITY MAP SCALE: 1"= 1 mile
USGS QUAD MAP BAIRD (A-7), 1954

LEGEND

- FOUND BRASS CAP MONUMENT
- FOUND PLASTIC CAP
- FOUND REBAR
- SET ALUMINUM CAP
- XX XX XX MEASURED DATA
- (XX XX XX) RECORD DATA PER PLAT (USS 4421)
- (C) COMPUTED
- OVERHEAD UTILITY LINE
- ELECTRIC METER
- UTILITY POLE
- GUY ANCHOR
- TELEPHONE LINE
- 1" DIAM. ABOVE GROUND GAS LINE
- EASEMENT LINE

SEE SHEET 2 FOR MONUMENT MARKINGS

NOTES

1. INFORMATION SHOWN HEREON BASED ON FIELD SURVEY CONDUCTED BY McCLINTOCK LAND ASSOCIATES, INC MARCH 10th through 17th, 2015 AND UPDATED ON FEBRUARY, 5TH, 2016.
2. THE BEARINGS AND DISTANCES SHOWN AS MEASURED ARE ROTATED TO THE BASIS OF BEARINGS AND REDUCED TO GROUND DISTANCES.
3. THIS LOT IS SUBJECT TO ANY EASEMENTS OF RECORD.
4. THE BASIS OF COORDINATES AND ELEVATION ON THIS SURVEY IS CP-1 (PT 600) SHOWN ON THE CE2 PLAN SET FOR THE CITY OF CHEFORNAK FACULTATIVE LAGOON PROJECT SURVEY CONTROL SHEET G2.1, SIGNED BY GARY NELSON ON 9-5-11. CP-1 IS A FOUND ALUMINUM MONUMENT SET IN 1997 AND RECOVERED AND SHOWN ON PLAT 2005-6.
5. THE CONTOURS SHOWN ON THIS PLAT WAS CREATED FROM POINTS COLLECTED DURING WINTER CONDITIONS AND SHOULD BE USED AS A GUIDE ONLY, ANY DITCHES, DIP, AND/OR SMALL RISES MAY HAVE BEEN COVERED BY SNOW AND NOT COLLECTED.
6. OWNERSHIP INFORMATION IS FROM A SEARCH OF THE PUBLIC RECORD AND SHOULD BE CONFIRMED WITH A TITLE REPORT.

20 0 20 40 80
SCALE IN FEET

REVISIONS

DATE: 2-10-16	DWN: TB	REMOVED BUILDINGS ON LOTS 6 & 7 AND ADDED NEW PILING

STATE OF ALASKA 49TH MICHAEL E. MILLER LS 7222 REGISTERED PROFESSIONAL LAND SURVEYOR 2/12/16

SURVEYOR'S CERTIFICATE

I CERTIFY THAT I AM PROPERLY REGISTERED AND LICENSED TO PRACTICE LAND SURVEYING IN THE STATE OF ALASKA, THAT THIS DRAWING REPRESENTS A SURVEY MADE BY ME OR UNDER MY DIRECT SUPERVISION AND THAT THE MONUMENTS SHOWN EXIST AS DESCRIBED.

MICHAEL E. MILLER
REGISTERED LAND SURVEYOR
LS 7222

2/12/16
DATE

SITE PLAN SURVEY OF

LOT 5, LOT 6 AND LOT 7
BLOCK 7, TRACT A
U.S. SURVEY 4421

SITUATED WITHIN

SECTION 19, TOWNSHIP 1 NORTH, RANGE 86 WEST, SEWARD MERIDIAN, ALASKA

BETHEL RECORDING DISTRICT

PREPARED BY:	PREPARED FOR:
McCLINTOCK LAND ASSOCIATES, INC. 16842 NORTH EAGLE RIVER LOOP ROAD EAGLE RIVER, ALASKA 99577 (907) 694-4499	STATE OF ALASKA – DEC 555 CORDOVA STREET ANCHORAGE, AK 99501 (907) 269-7614

PLOT: 1"=20'	CHK: MM	JOB: 15-118	DWG: SP15-118	FB NO: 277-38
GRID: CHEFORNAK	DWN: TB	DATE: 2-10-16	DISK: J-DRIVE	SHEET: 1 OF 2

RECORD DRAWING CERTIFICATE
THESE DRAWINGS REFLECT RECORDED INFORMATION OBTAINED DURING CONSTRUCTION. INFORMATION PROVIDED HEREIN IS ACCURATE TO THE BEST OF MY KNOWLEDGE.
NAME DATE

SCALE: AS SHOWN
BAR IS ONE INCH ON ORIGINAL DRAWING 0 1"
IF NOT ONE INCH ON THIS SHEET, ADJUST SCALES ACCORDINGLY

CONSTRUCTION RECORD
FIELD BOOK
STAKING
FOREMAN
AS-BUILT
INSPECTOR

WASHETERIA AND WATER TANK
SITE PLAN
PLAT SURVEY
CHEFORNAK, ALASKA

CE2 ENGINEERS, INC.
PO BOX 223948 ANCHORAGE, AK 99522 PH: 907-349-1010 FAX: 907-349-1015

REVISION	BY	DATE

Project No. ____ Date JUNE 2016
Designed ____
Drawn ____
Approved PCW

Sheet No. C1.1
SHEET ____ OF ____

G:\ACAD\CHEFORNAK\2016 Washeteria and Water Tank\C1.1 SITE PLAN SURVEY.dwg, 6/15/2016 4:44:53 PM, cmerz, \\Ce2main\LANIER MP C2050/LD520C PCL 6

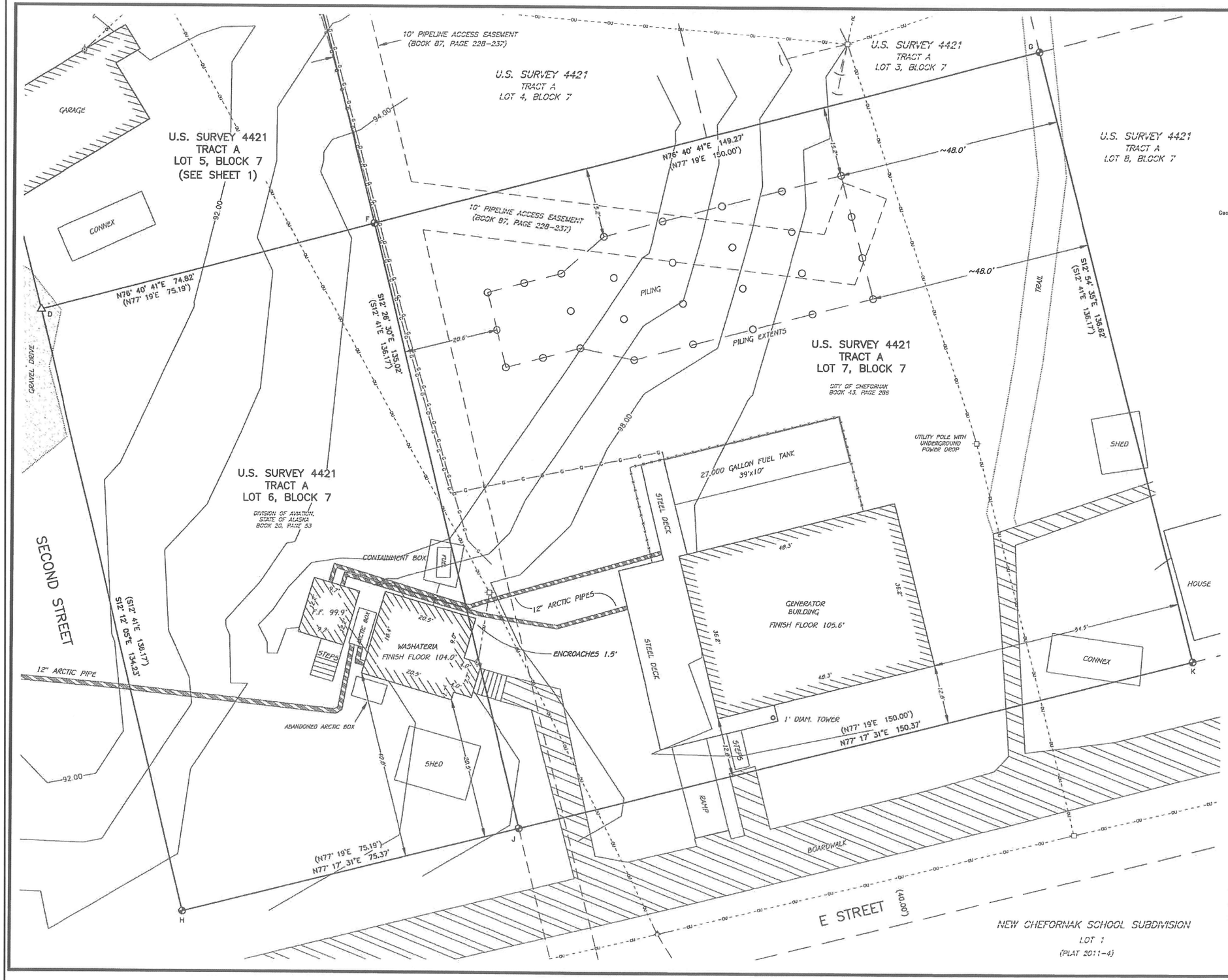

RECOVERED CORNERS

A — Found 3 1/4" brass cap 1 ins. above ground in great condition.

B — Found 3 1/4" brass cap 1 ins. above ground in good condition.

D — Found rebar in good condition.

C — Found plastic cap in good condition.

SET CORNERS

E — Set 2" aluminum cap on 5/8"x30" rebar 29" in the ground

F — Set 2" aluminum cap on 5/8"x30" rebar 31" in the ground

G — Set 2" aluminum cap on 5/8"x30" rebar 30" in the ground

H — Set 2" aluminum cap on 5/8"x30" rebar 31" in the ground

J — Set 2" aluminum cap on 5/8"x30" rebar 28" in the ground

K — Set 2" aluminum cap on 5/8"x30" rebar 32" in the ground

LEGEND

- FOUND BRASS CAP MONUMENT
- FOUND PLASTIC CAP
- FOUND REBAR
- SET ALUMINUM CAP
- XX XX XX — MEASURED DATA
- (XX XX XX) — RECORD DATA PER PLAT (USS 4421)
- (C) — COMPUTED
- OVERHEAD UTILITY LINE
- ELECTRIC METER
- UTILITY POLE
- GUY ANCHOR
- COMM — TELEPHONE LINE
- C — 1" DIAM. ABOVE GROUND GAS LINE
- EASEMENT LINE

10 0 10 20 30

SCALE IN FEET

REVISIONS

DATE: 2-10-16	DWN: TB	REMOVED BUILDINGS ON LOTS 6 & 7 AND ADDED NEW PILING

SITE PLAN SURVEY OF

LOT 5, LOT 6 AND LOT 7
BLOCK 7, TRACT A
U.S. SURVEY 4421

SITUATED WITHIN

SECTION 19, TOWNSHIP 1 NORTH, RANGE 86 WEST,
SEWARD MERIDIAN, ALASKA

BETHEL RECORDING DISTRICT

PREPARED BY:	PREPARED FOR:
McCLINTOCK LAND ASSOCIATES, INC. 16942 NORTH EAGLE RIVER LOOP ROAD EAGLE RIVER, ALASKA 99577 (907) 694-4499	STATE OF ALASKA – DEC 555 CORDOVA STREET ANCHORAGE, AK 99501 (907) 269-7614

PLOT: 1"=10'	CHK: MM	JOB: 15-118	DWG: SP15-118	FB NO: 277-36
GRID: CHEFORNAK	DWN: TB	DATE: 2-10-16	DISK: J-DRIVE	SHEET: 2 OF 2

RECORD DRAWING CERTIFICATE

THESE DRAWINGS REFLECT RECORDED INFORMATION OBTAINED DURING CONSTRUCTION. INFORMATION PROVIDED HEREIN IS ACCURATE TO THE BEST OF MY KNOWLEDGE.

NAME | DATE

SCALE: AS SHOWN

BAR IS ONE INCH ON ORIGINAL DRAWING. 0 1"

IF NOT ONE INCH ON THIS SHEET, ADJUST SCALES ACCORDINGLY

CONSTRUCTION RECORD

FIELD BOOK

STAKING

FOREMAN

AS-BUILT

INSPECTOR

WASHETERIA AND WATER TANK

SITE PLAN
LOT SURVEY

CHEFORNAK, ALASKA

CE2 ENGINEERS, INC.
PO BOX 202598 ANCHORAGE, AK 99520 PH: 907-349-1015 FAX: 907-349-1015

REVISION	BY	DATE

Project No. ____ Date ____ JUNE 2016 Designed ____ Drawn ____ Approved ____ PCW

Sheet No. C1.2

SHEET ____ OF ____

G:\ACAD\CHEFORNAK\2016 Washeteria and Water Tank\C1.1 SITE PLAN SURVEY.dwg, 6/15/2016 4:25:47 PM, cmerz, \\Ce2main\LANIER MP C2050/LD520C PCL 6

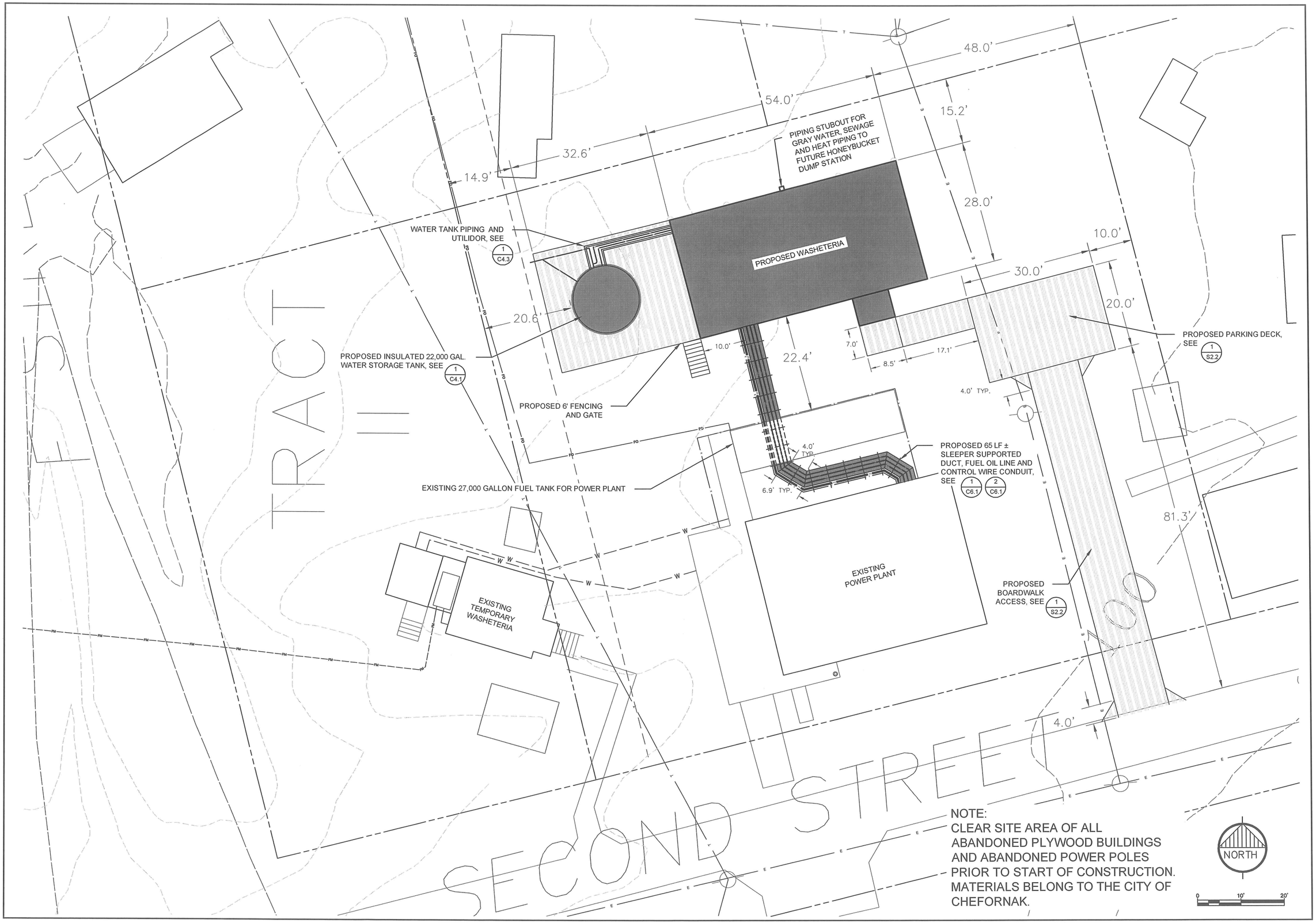

NOTE:
CLEAR SITE AREA OF ALL ABANDONED PLYWOOD BUILDINGS AND ABANDONED POWER POLES PRIOR TO START OF CONSTRUCTION. MATERIALS BELONG TO THE CITY OF CHEFORNAK.

RECORD DRAWING CERTIFICATE

THESE DRAWINGS REFLECT RECORDED INFORMATION OBTAINED DURING CONSTRUCTION. INFORMATION PROVIDED HEREIN IS ACCURATE TO THE BEST OF MY KNOWLEDGE.

NAME DATE

SCALE: AS SHOWN

BAR IS ONE INCH ON ORIGINAL DRAWING 0 1"

IF NOT ONE INCH ON THIS SHEET, ADJUST SCALES ACCORDINGLY

CONSTRUCTION RECORD

FIELD BOOK

STAKING

FOREMAN

AS-BUILT

INSPECTOR

STATE OF ALASKA 49TH PAUL C. WEISNER CE-10276 REGISTERED PROFESSIONAL ENGINEER

WASHETERIA AND WATER TANK

PROJECT SITE PLAN

CHEFORNAK, ALASKA

CE2 ENGINEERS, INC.

PO BOX 232946 ANCHORAGE, AK 99523 PH: 907-349-1010 FAX: 907-349-1015

REVISION	BY	DATE

Project No.

Date MARCH 2016

Designed

Drawn CM

Approved PCW

Sheet No. C2.0

SHEET ____ OF ____

G:\ACAD\CHEFORNAK\2016 Washeteria and Water Tank\C2.0 SITE PLAN.dwg, 6/15/2016 3:14:02 PM, cmerz, \\Ce2main\LANIER MP C2050/LD520C PCL 6

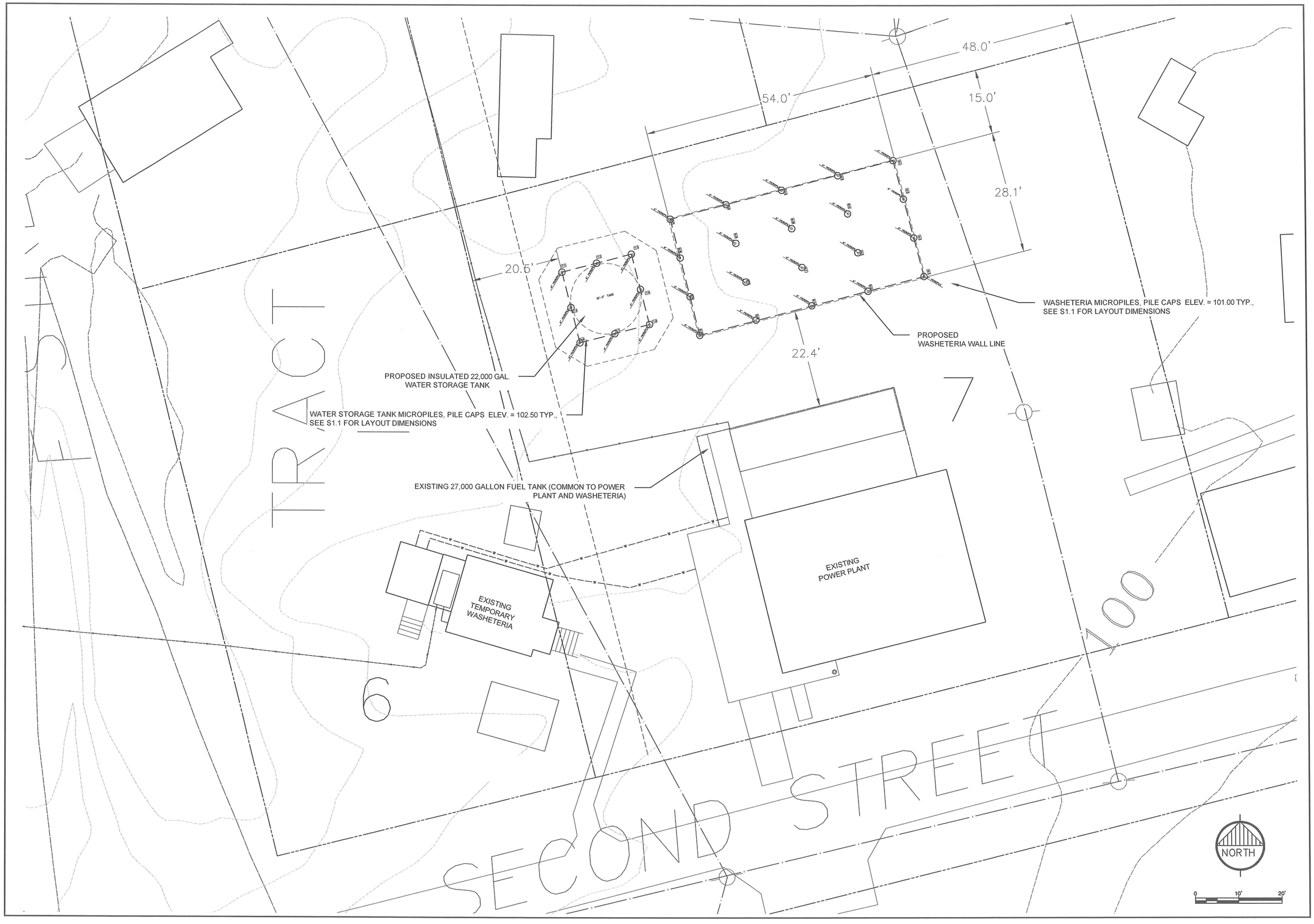

RECORD DRAWING CERTIFICATE

THESE DRAWINGS REFLECT RECORDED INFORMATION OBTAINED DURING CONSTRUCTION. INFORMATION PROVIDED HEREIN IS ACCURATE TO THE BEST OF MY KNOWLEDGE.

NAME DATE

SCALE: AS SHOWN

BAR IS ONE INCH ON ORIGINAL DRAWING 0 1"

IF NOT ONE INCH ON THIS SHEET, ADJUST SCALES ACCORDINGLY

CONSTRUCTION RECORD

FIELD BOOK

STAKING

FOREMAN

AS-BUILT

INSPECTOR

STATE OF ALASKA 49TH PAUL C. WEBNER CE-10276 REGISTERED PROFESSIONAL ENGINEER

WASHETERIA AND WATER TANK

FOUNDATION MICROPILES SITE PLAN

CHEFORNAK, ALASKA

CE2 ENGINEERS, INC.

PO BOX 222946 ANCHORAGE, AK 99522 PH: 907-349-1010 FAX: 907-349-1015

REVISION	BY	DATE

Project No. ____

Date JUNE 2016

Designed ____ CM

Drawn ____ PCW

Approved ____

Sheet No. C3.0

SHEET ____ OF ____

G:\ACAD\CHEFORNAK\2016 Washeteria and Water Tank\C3.0 PILE SITTE PLAN.dwg, 6/15/2016 4:24:49 PM, cmerz, \\Ce2main\LANIER MP C2050/LD520C PCL 6

G:\ACAD\CHEFORNAK\2016 Washeteria and Water Tank\C3.0 PILE SITE PLAN.dwg, 6/15/2016 4:28:37 PM, cmerz, \\Ce2main\LANIER MP C2050/LD520C PCL 6

RECORD DRAWING CERTIFICATE

THESE DRAWINGS REFLECT RECORDED INFORMATION OBTAINED DURING CONSTRUCTION. INFORMATION PROVIDED HEREIN IS ACCURATE TO THE BEST OF MY KNOWLEDGE.

NAME DATE

SCALE: AS SHOWN

BAR IS ONE INCH ON ORIGINAL DRAWING

0 1"

IF NOT ONE INCH ON THIS SHEET, ADJUST SCALES ACCORDINGLY

CONSTRUCTION RECORD

FIELD BOOK

STAKING

FOREMAN

AS-BUILT

INSPECTOR

STATE OF ALASKA 49TH PAUL C. WESNER CE-10276 REGISTERED PROFESSIONAL ENGINEER

WASHETERIA AND WATER TANK

FOUNDATION MICROPILES

CHEFORNAK, ALASKA

CE2 ENGINEERS, INC.
PO BOX 223948 ANCHORAGE, AK 99523 PH: 907-349-1010 FAX: 907-349-1015

REVISION	BY	DATE

Project No. ____
Date JUNE 2016
Designed ____
Drawn CM
Approved PCW

Sheet No. C3.1

SHEET ____ OF ____

ACCESSORY ORIENTATION CHART

ITEM	SERVICE	SIZE	REF. DEGREE	RADIUS	ELEVATION FROM BOTTOM FLANGE OF SIDE STAVE TO CENTERLINE OF ACCESSORY
1	NOZZLE PAIR	3" / 2"	0°	7'-8 5/16"	1'-0"
2	SHELL MANWAY	30" Ø I.D.	135°	7'-8 5/16"	2'-6"
3	ROOF HATCH	24" SQ. HATCH	135°	4'-8 5/16" (TO HATCH CENTER)	ON TANK ROOF
4	FROST FREE ROOF VENT	20" Ø I.D.	CENTER	CENTER	ON TANK ROOF
5	LADDER, SAFTEY CAGE, LOCKING BOTTOM LID	--	90°	7'-8 5/16"	--
6	INTERNAL OVERFLOW PIPE	4" Ø SCH 40 S.S.	315°	--	1'-0"
7					

DESIGN CRITERIA

NOMINAL TANK CAPACITY:	22,000 GALLONS
MAXIMUM HEIGHT OF WATER:	15 FT-6 INCHES
TANK WALL HEIGHT:	16 FT-1 IN
NOMINAL TANK DIAMETER:	15 FT-4-5/8 IN
FOUNDATION TYPE:	ENGINEERED STEEL DECK ATOP MICROPILE FOUNDATION (BY OTHERS)
SEISMIC DESIGN / IMPORTANCE FACTOR:	SITE CLASS D SEISMIC DESIGN CATEGORY D S_S = 0.108G S_1 = 0.06G SD_S = 0.116 SD1=0.09 I = 1.0
SNOW LOAD / IMPORTANCE FACTOR:	40-LBS/SQ FT ROOF / 1.0
WIND LOAD / IMPORTANCE FACTOR:	130 MPH (3 SECOND GUST) EXPOSURE C / 1.0
NUMBER OF 30-INCH DIA SHELL MANWAYS:	1 REQUIRED
ROOF MANWAYS:	1 EACH REQUIRED, 30" SQUARE HINGED DECK
OUTSIDE TANK LADDER AND HANDRAIL	REQUIRED, POSITION AS SHOWN ON SHEET C4.1
COATING SYSTEM:	AWWA - APPROVED POWDER COATING SYSTEM OR THERMALLY CURED EPOXY PAINT PER SPECS.
CENTER VENT TYPE:	CENTER DECK FROST FREE SCREENED VENTILATION WITH STAINLESS STEEL BIRD SCREEN

SHEET NOTES:

1. ORIENT ACCESSORIES AS SHOWN. IF CONFLICT ARISES WITH STAVE VERTICAL SEAMS, CONTACT ENGINEER FOR RESOLUTION.
2. TANK TO MEET AWWA-D 103-09 STANDARDS.
3. A ROLLED TAPERED PANEL (RTP) TYPE TANK IS ALSO ACCEPTABLE.
4. TANK SHALL BE POWDER COATED (OR OTHER AWWA APPROVED COATING) CARBON STEEL w/ INTERIOR COATING MEETING NSF-61, STANDARD
5. ALL NOZZLES, FLANGES, SUPPORTS AND INTERNAL PIPE SHALL BE STAINLESS STEEL TYPE 304L.
6. ALL FLANGED CONNECTIONS SHALL MEET THE STANDARD REQUIREMENTS OF AWWA C228, CLASS D.
7. TANK WILL BE INSULATED WITH 6" FOAM INSULATION TOP (DOUBLE DECK) AND ON SIDES (THERMACON OR EQUAL). INCLUDING MANHOLE AND TANK DRAIN PIPE INSULATION COVERS. BOTTOM INSULATION SHALL BE 3 LAYERS OF 2" THICK EXTRUDED POLY STYRENE FOAM BOARD (DOW STYROFOAM HIGHLOAD 40 OR EQUAL). STAGGER INSULATION JOINTS.
8. PROVIDE OSHA COMPLIANT LADDER AND GUARDRAILS.
9. TANK VENT SHALL BE OF FROST FREE DESIGN AND SCREENED WITH #4 GALVANIZED OR STAINLESS STEEL MESH.
10. SEALANTS AND GASKETS SHALL MEET NSF-61 STANDARD.
11. ALL PIPE CONNECTIONS SHALL MEET AWWA D103-09 TABLES AT A MINIMUM FOR DISPLACEMENT. SEE SECTION 144.
12. ROOF AND STAVE LAYOUT WILL BE SET BY TANK FABRICATOR TO AVOID CONFLICTS WITH BOLTED ON ACCESSORIES.

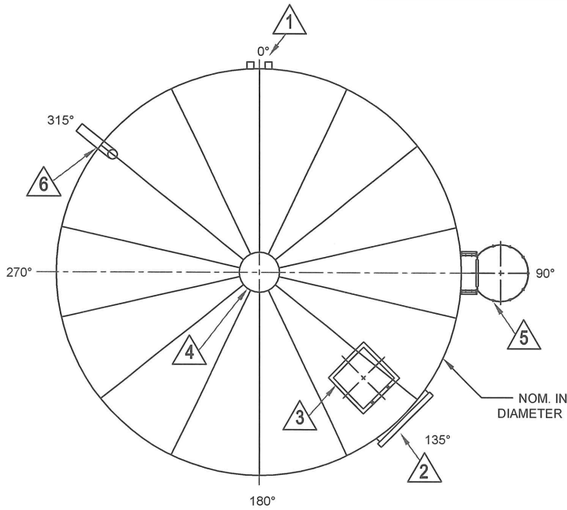

1 / C4.1 WATER TANK DECK PLAN
NOT TO SCALE

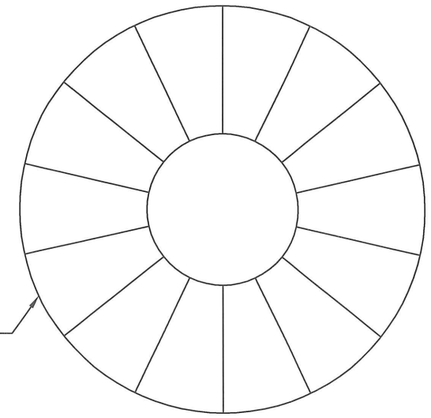

2 / C4.1 WATER TANK BOTTOM PLAN
NOT TO SCALE

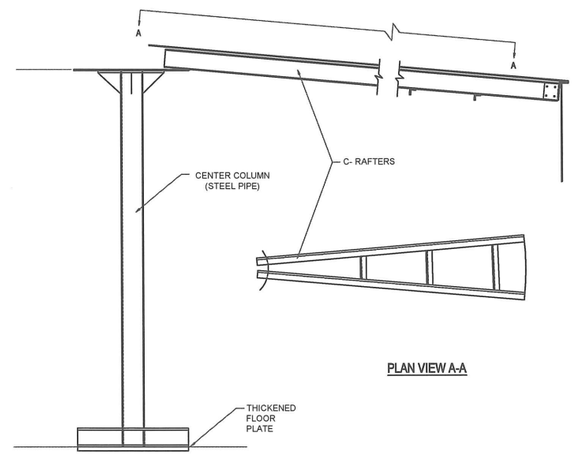

3 / C4.1 CENTER SUPPORT DETAIL
NOT TO SCALE

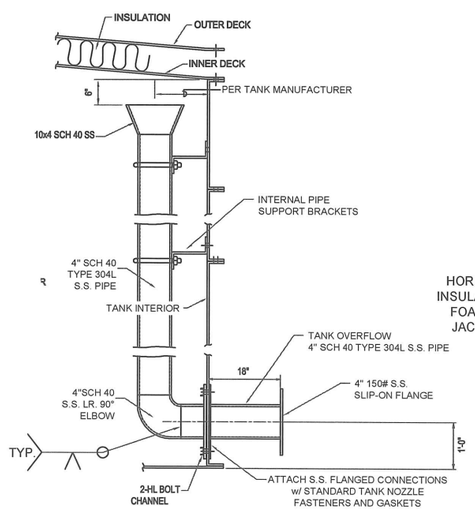

4 / C4.1 INTERNAL OVERFLOW WEIR 6
NOT TO SCALE

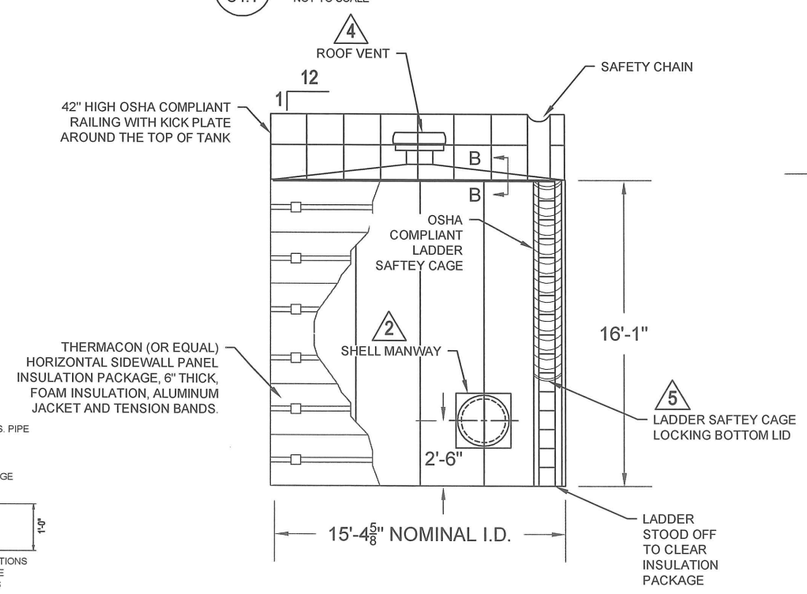

A / C4.1 WATER TANK ELEVATION
NOT TO SCALE

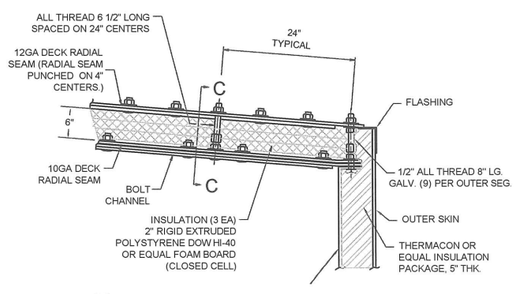

B / C4.1 SECTION B-B
NOT TO SCALE

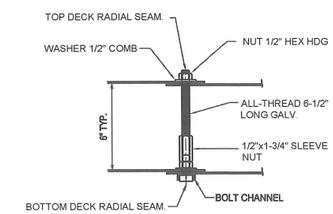

C / C4.1 SECTION C-C
NOT TO SCALE

RECORD DRAWING CERTIFICATE
THESE DRAWINGS REFLECT RECORDED INFORMATION OBTAINED DURING CONSTRUCTION. INFORMATION PROVIDED HEREIN IS ACCURATE TO THE BEST OF MY KNOWLEDGE.
NAME DATE

SCALE: AS SHOWN
BAR IS ONE INCH ON ORIGINAL DRAWING
0 1"
IF NOT ONE INCH ON THIS SHEET, ADJUST SCALES ACCORDINGLY

CONSTRUCTION RECORD
FIELD BOOK
STAKING
FOREMAN
AS-BUILT
INSPECTOR

STATE OF ALASKA 49TH PAUL C. WESNER CE-10276 REGISTERED PROFESSIONAL ENGINEER

WASHETERIA AND WATER TANK
WATER TANK PLAN, ELEVATIONS, AND DETAILS
CHEFORNAK, ALASKA

CE2 ENGINEERS, INC.
PO BOX 223946 ANCHORAGE, AK 99523 PH: 907-349-1010 FAX: 907-349-1015

REVISION	BY	DATE

Project No. ____
Date JUNE 2016
Designed PCW
Drawn CM
Approved PCW

Sheet No. C4.1
SHEET ____ OF ____

G:\ACAD\CHEFORNAK\2016 Washeteria and Water Tank\C4.1 C4.2 WATER TANK.dwg, 6/15/2016 4:01:12 PM, cmerz, \\Ce2main\LANIER MP C2050/LD520C PCL 6

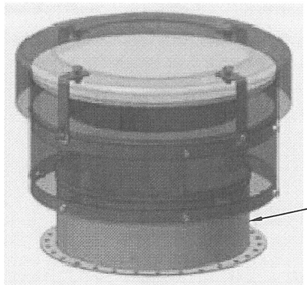

VENT

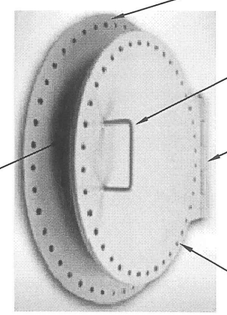

MANWAY

1 / C4.2 TANK SHELL MANWAY & FROST FREE TANK VENT

NOT TO SCALE

NOTES:

1. ALL PIPE SPOOL NUMBERS ARE DESIGNATED BY THE FOLLOWING: (#)
2. ALL MATERIALS, EXCEPT BUTTERFLY VALVES, TO BE SUPPLIED BY TANK MANUFACTURE.
3. TANK SPOOL FLANGES TO BE CONSTRUCTED TO AWWA REQUIREMENTS, AND SUPPLIED WITH TANK BOLTS, NUTS AND NSF-61 GASKETS. ALL OTHER FLANGES SHALL BE 150# PATTERN TYPE 304 STAINLESS STEEL, WELD NECK OR SLIP FLANGE, AS APPROPRIATE, BY TANK MANUFACTURE.
4. ALL PIPES AND FITTINGS SHALL BE SCH 40 TYPE 304L STAINLESS STEEL.
5. STEEL PLATE AND SHAPES SHALL BE TYPE 304L STAINLESS STEEL.

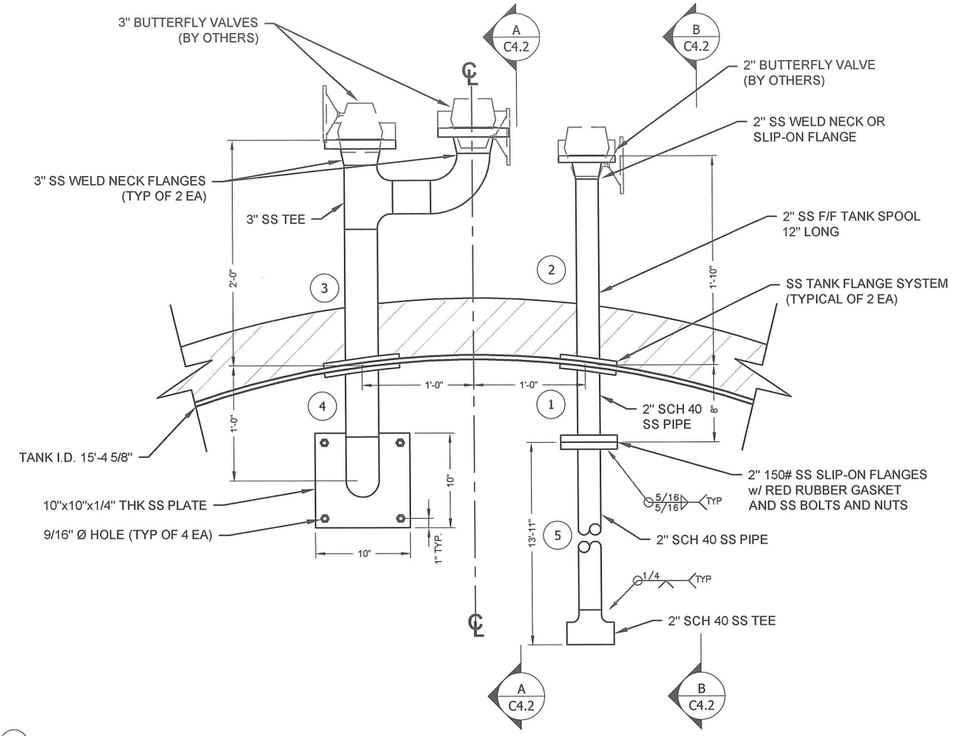

2 / C4.2 WATER TANK PIPE MANIFOLDS AND FLANGES

NOT TO SCALE

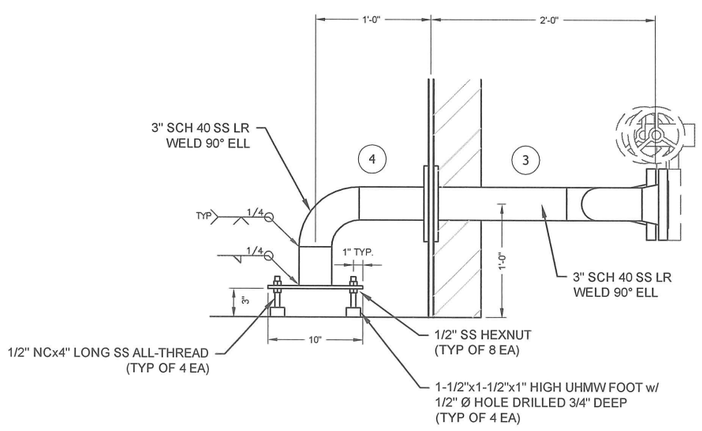

A / C4.2 3" DRAIN PIPE AND SUCTION DETAIL

NOT TO SCALE

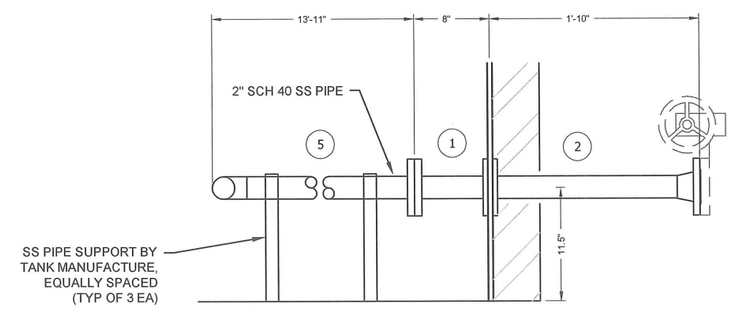

B / C4.2 2" TANK FILL PIPE

NOT TO SCALE

RECORD DRAWING CERTIFICATE

THESE DRAWINGS REFLECT RECORDED INFORMATION OBTAINED DURING CONSTRUCTION. INFORMATION PROVIDED HEREIN IS ACCURATE TO THE BEST OF MY KNOWLEDGE.

NAME DATE

SCALE: AS SHOWN

BAR IS ONE INCH ON ORIGINAL DRAWING: 0 1"

IF NOT ONE INCH ON THIS SHEET, ADJUST SCALES ACCORDINGLY

CONSTRUCTION RECORD

FIELD BOOK

STAKING

FOREMAN

AS-BUILT

INSPECTOR

STATE OF ALASKA 49TH PAUL C. WEBNER CE-10276 REGISTERED PROFESSIONAL ENGINEER

WASHETERIA AND WATER TANK

WATER TANK DETAILS

CHEFORNAK, ALASKA

CE2 ENGINEERS, INC.

PO BOX 223946 ANCHORAGE, AK 99523 PH: 907-349-1010 FAX: 907-349-1015

REVISION	BY	DATE

Project No. ____
Date JUNE 2016
Designed PCW
Drawn CM
Approved PCW

Sheet No. C4.2

SHEET ____ OF ____

G:\ACAD\CHEFORNAK\2016 Washeteria and Water Tank\C4.1 C4.2 WATER TANK.dwg, 6/15/2016 4:00:28 PM, cmerz, \\Ce2main\LANIER MP C2050/LD520C PCL 6

MATERIAL LIST

1. 4" SCH 40 SS TANK NOZZLE FLANGED, SEE TANK OVERFLOW ASSEMBLY, SHEET C4.2
2. 4" HDPE SDR 17 FLANGE ADAPTER, DI BACKUP RING, 6" X 1/8" RED RUBBER GASKET FOR 150# FLANGE, AND SS BOLTS AND NUTS FOR FLANGE ASSEMBLY
3. 6X4 HDPE SDR 17 REDUCER
4. 6" HDPE SDR 17 HDPE PIPE
5. 6" HDPE SDR 17 WYE BRANCH
6. 6" HDPE SDR 17 90 DEG EL
7. 6" X 3" HDPE SDR 17 REDUCER, CONSISTING OF 6"X4" SDR 17 BUTT FUSED REDUCER AND 4"X3" SDR17 BUTT FUSED REDUCER
8. 3" HDPE SDR 17 FLANGE ASSEMBLY: 2 EA DI BACKUP RING, 2 EA HDPE FLANGE PUPS, 6" 150# FLANGE X 1/8" THK RED RUBBER GASKET, SS BOLTS AND NUTS
9. 3" HDPE SDR 17 HDPE PIPE
10. 3" HDPE SDR 17 HDPE MOLDED 90 DEG EL
11. 3" 150# FLANGE PATTERN X 3" ID X 1" THICK UHMW FLANGE SPACER, 3" 150# FLANGE PATTERN RED RUBBER GASKET X1/8" THK, 3" SDR11 HDPE FLANGE PUP, DI BACKING RING, FLANGE BOLTS
12. 2" 150# FLANGE PATTERN X 2" ID X 1" THICK UHMW FLANGE SPACER, 2" 150# FLANGE PATTERN RED RUBBER GASKET X1/8" THK, 2" SDR11 HDPE FLANGE PUP, DI BACKING RING, FLANGE BOLTS
13. 2" HDPE SDR11 PIPE
14. 2" HDPE SDR 11 HDPE MOLDED 90 DEG EL
15. 2" WIDE x 3/16" THK ALUMINUM FLANGE AT TOP OF 3/16" ALUMINUM VALVE BOX
16. 4" THK RIGID FOAM INSULATION, (2 EA) 2" THICK LAYERS BOTTOM, TOP, AND TOP
17. SPRAY FOAM ALL VOIDS BETWEEN TANK AND ALUMINUM VALVE BOX

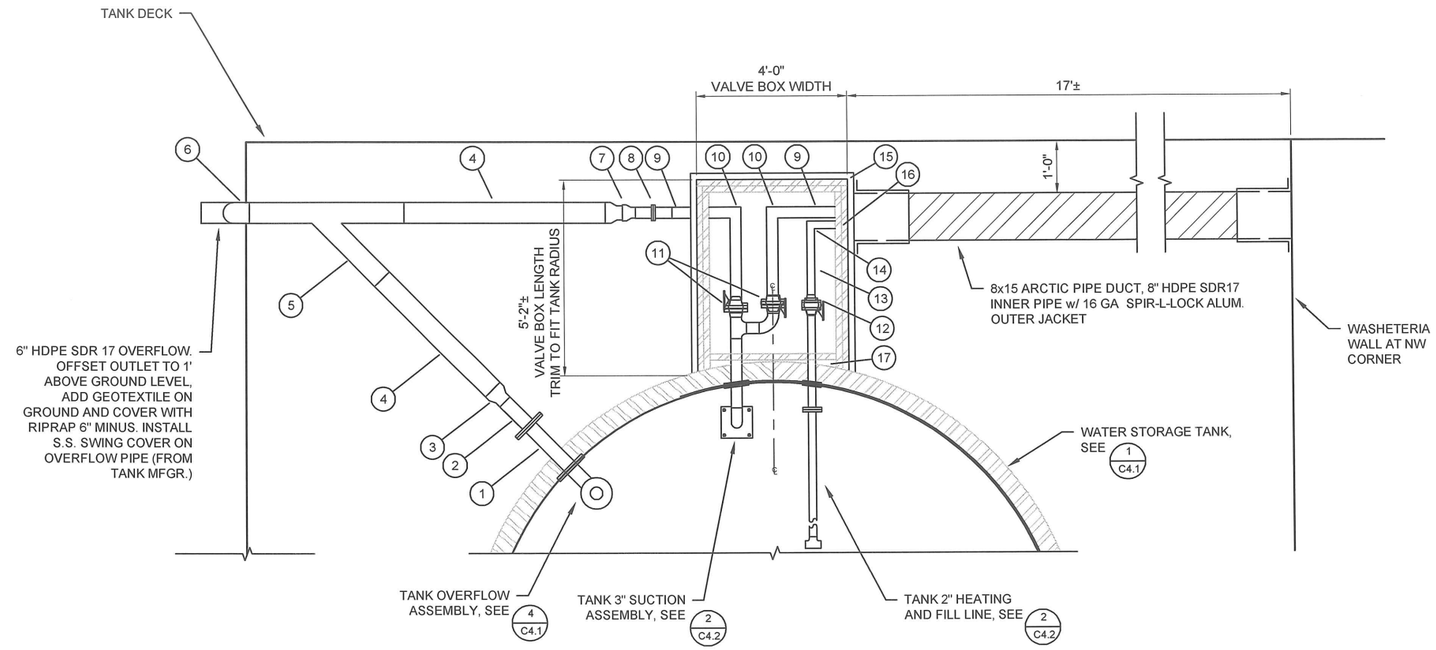

1/C4.3 WATER TANK PIPING PLAN
SCALE: 1/2" = 1'-0"

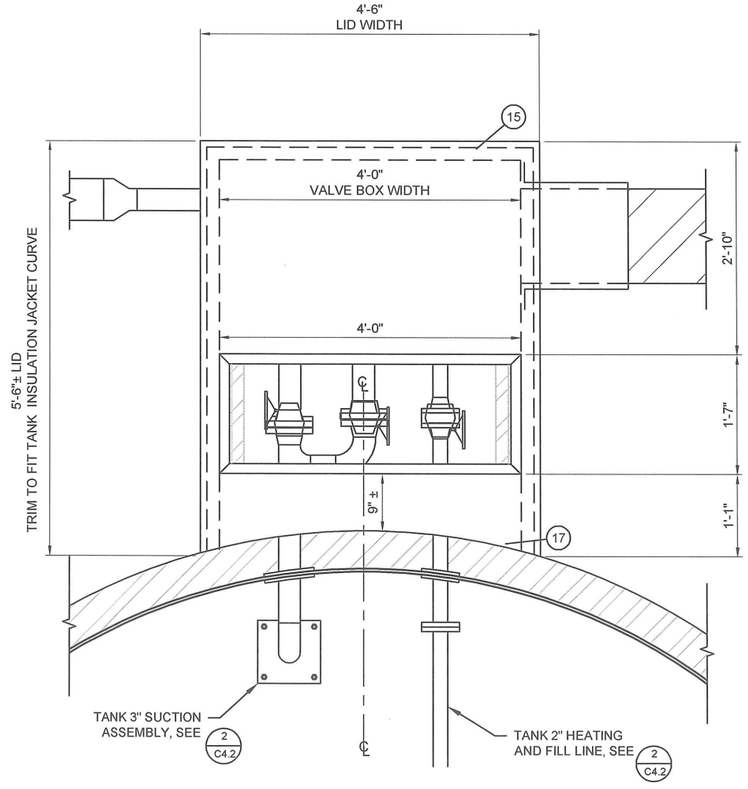

2/C4.3 WATER TANK VALVE BOX PLAN
SCALE: 1" - 1'-0"

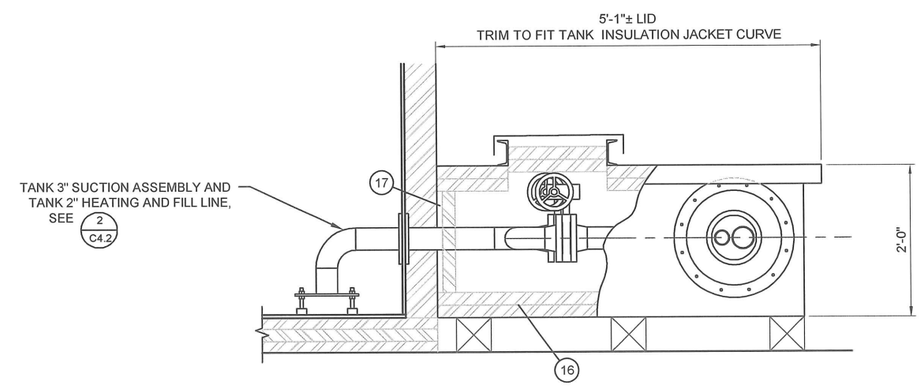

3/C4.3 WATER TANK VALVE BOX ELEVATION / SECTION
NOT TO SCALE

RECORD DRAWING CERTIFICATE
THESE DRAWINGS REFLECT RECORDED INFORMATION OBTAINED DURING CONSTRUCTION. INFORMATION PROVIDED HEREIN IS ACCURATE TO THE BEST OF MY KNOWLEDGE.
NAME DATE

SCALE: AS SHOWN
BAR IS ONE INCH ON ORIGINAL DRAWING
IF NOT ONE INCH ON THIS SHEET, ADJUST SCALES ACCORDINGLY

CONSTRUCTION RECORD
FIELD BOOK
STAKING
FOREMAN
AS-BUILT
INSPECTOR

STATE OF ALASKA 49TH PAUL C. WESNER CE-10276 REGISTERED PROFESSIONAL ENGINEER

WASHETERIA AND WATER TANK
WATER TANK UTILIDOR DETAILS
CHEFORNAK, ALASKA

CE2 ENGINEERS, INC.
PO BOX 223948 ANCHORAGE, AK 99523 Ph: 907-349-1010 FAX: 907-349-1015

REVISION	BY	DATE

Project No. ____
Date JUNE 2016
Designed PCW
Drawn CM
Approved PCW

Sheet No. C4.3
SHEET ____ OF ____

G:\ACAD\CHEFORNAK\2016 Washeteria and Water Tank\C4.3 WATER TANK Utilidor.dwg, 6/15/2016 4:46:55 PM, cmerz, \\Ce2main\LANIER MP C2050/LD520C PCL 6

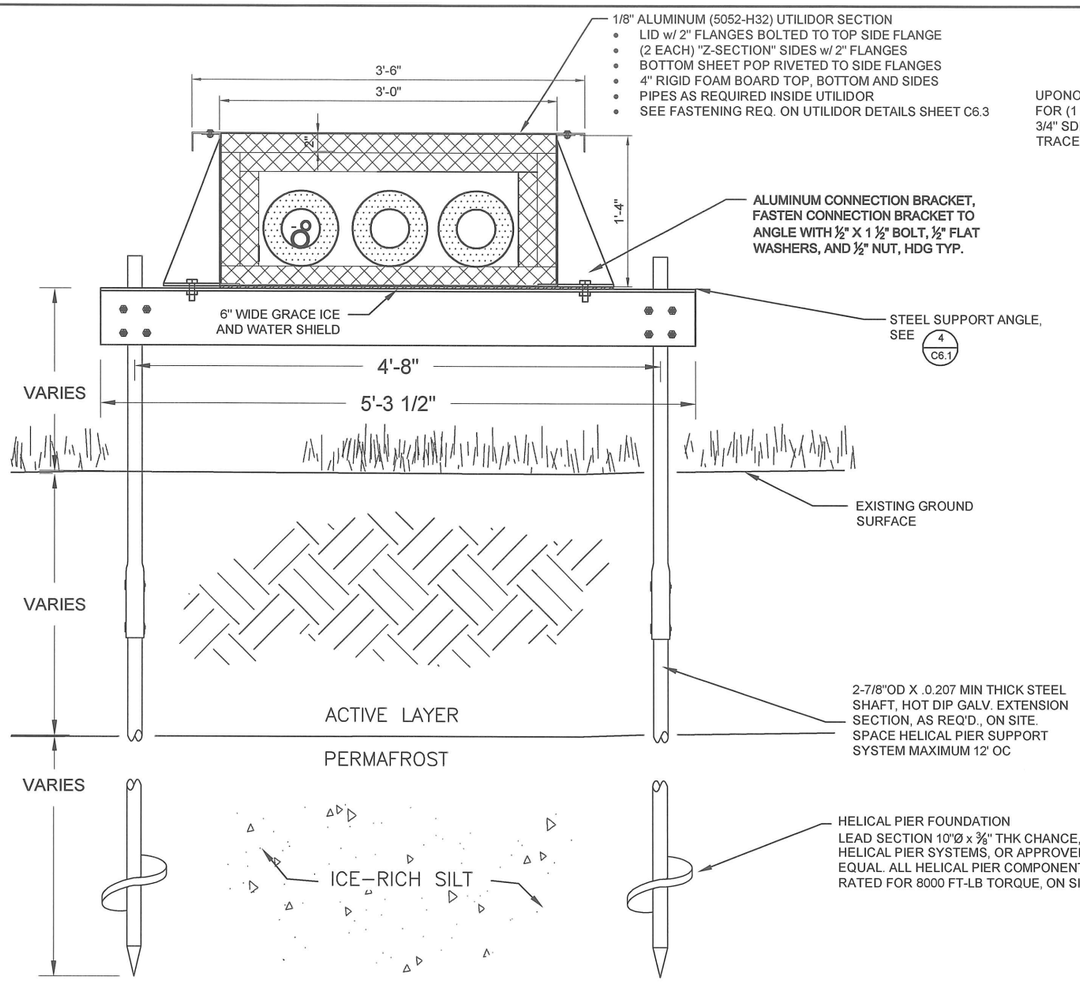

3 C6.1 UTILIDOR WITH HELICAL PIER SUPPORT
NTS

NOTES:

1. REMOVE ALL ORGANIC MATERIAL 6-10" BENEATH THE 4x12 SLEEPERS AND REPLACE WITH ADOT TYPE C-1 MATERIAL.
2. STACK UP TO 2 SLEEPERS AS FIELD REQUIRED, OTHERWISE USE HELICAL PIER SUPPORT, DETAIL 3 THIS SHEET.
3. UTILIDOR SLEEPER SUPPORTS WILL BE PLACED EVERY 6' O.C.
4. PROVIDE INSULATING GASKETS AND/OR COATINGS BETWEEN DISSIMILAR METALS, TYP.

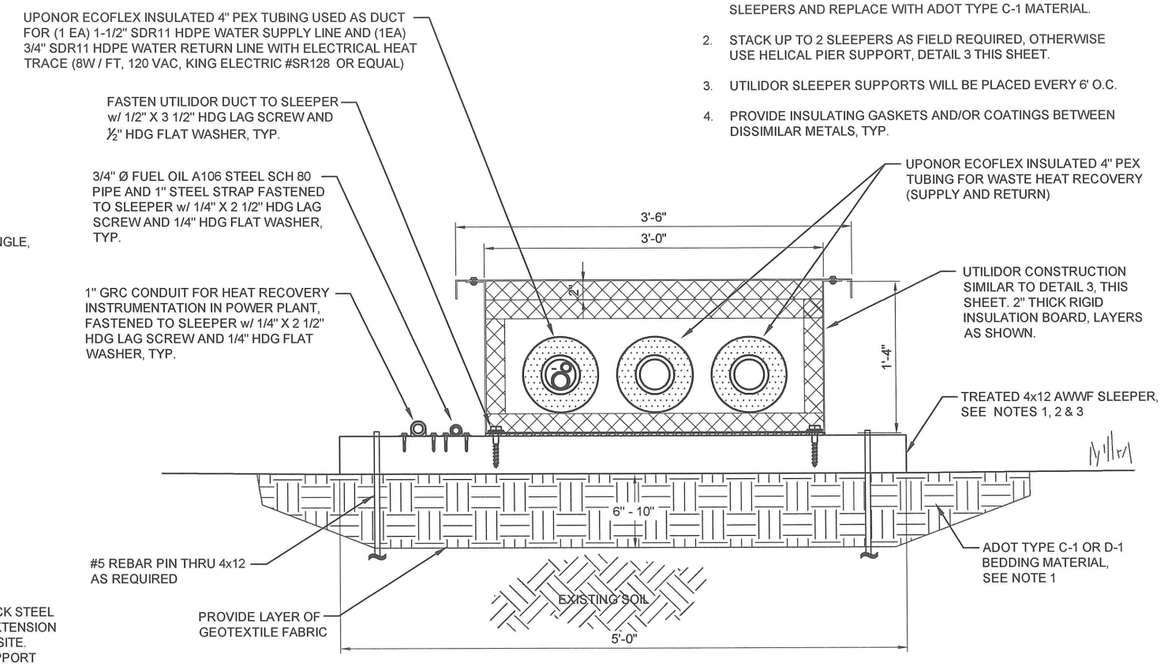

1 C6.1 WATER AND WASTE HEAT DUCT SLEEPER SUPPORT DETAILS
NTS

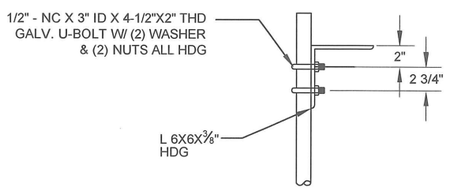

4 C6.1 STEEL SUPPORT ANGLE DETAILS
NTS

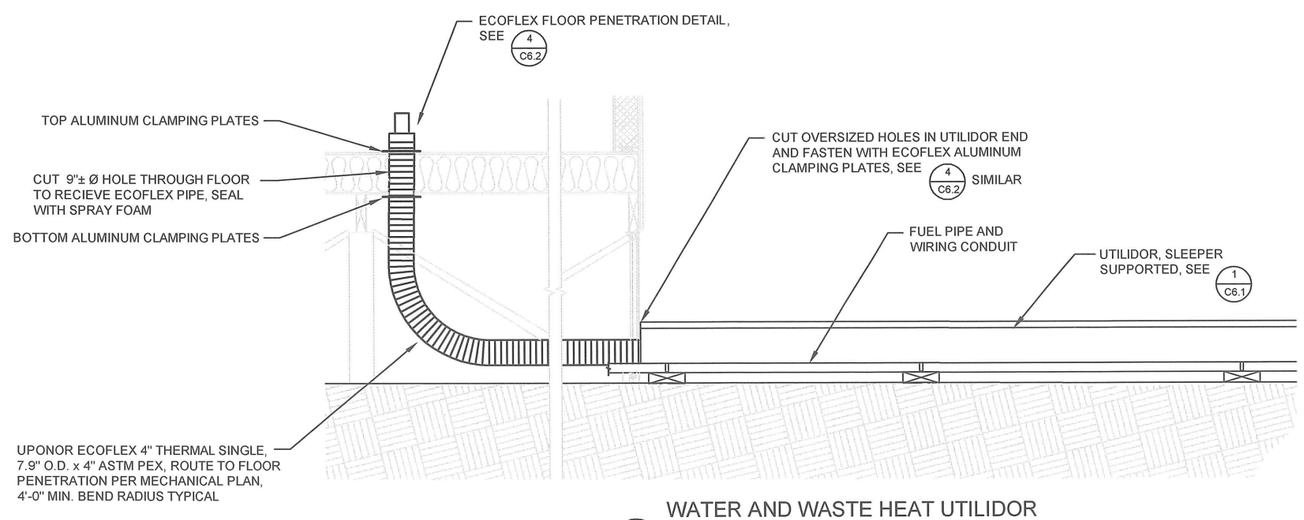

2 C6.1 WATER AND WASTE HEAT UTILIDOR TO WASHETERIA / POWER PLANT
NTS

RECORD DRAWING CERTIFICATE
THESE DRAWINGS REFLECT RECORDED INFORMATION OBTAINED DURING CONSTRUCTION. INFORMATION PROVIDED HEREIN IS ACCURATE TO THE BEST OF MY KNOWLEDGE.
NAME DATE

SCALE: AS SHOWN
BAR IS ONE INCH ON ORIGINAL DRAWING 0 1"
IF NOT ONE INCH ON THIS SHEET, ADJUST SCALES ACCORDINGLY

CONSTRUCTION RECORD
FIELD BOOK
STAKING
FOREMAN
AS-BUILT
INSPECTOR

STATE OF ALASKA 49TH PAUL C. WESNER CE-10276 REGISTERED PROFESSIONAL ENGINEER

WASHETERIA AND WATER TANK
UTILIDOR / PIPE SUPPORT DETAILS
CHEFORNAK, ALASKA

CE2 ENGINEERS, INC.
PO BOX 232946 ANCHORAGE, AK 99523 PH: 907-349-1010 FAX: 907-349-1015

REVISION	BY	DATE

Project No. ____
Date JUNE 2016
Designed PCW
Drawn CM
Approved PCW

Sheet No. C6.1
SHEET ____ OF ____

G:\ACAD\CHEFORNAK\2016 Washeteria and Water Tank\C6.1 Utilidor Details.dwg, 6/15/2016 4:26:11 PM, cmerz, \\Ce2main\LANIER MP C2050/LD520C PCL 6

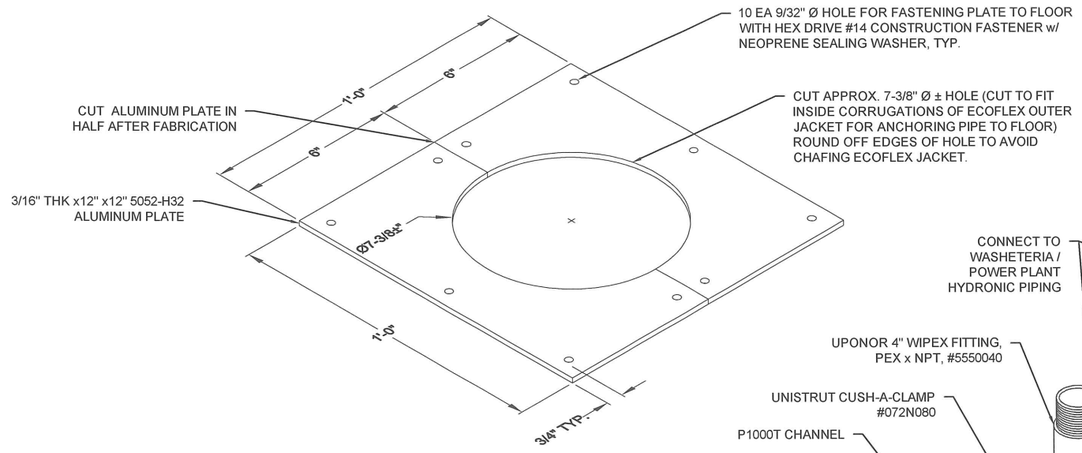

ECOFLEX ALUMINUM CLAMPING PLATES DETAIL

NOTE:

1. ALL PART NUMBERS ARE UNISTRUT, U.N.O.

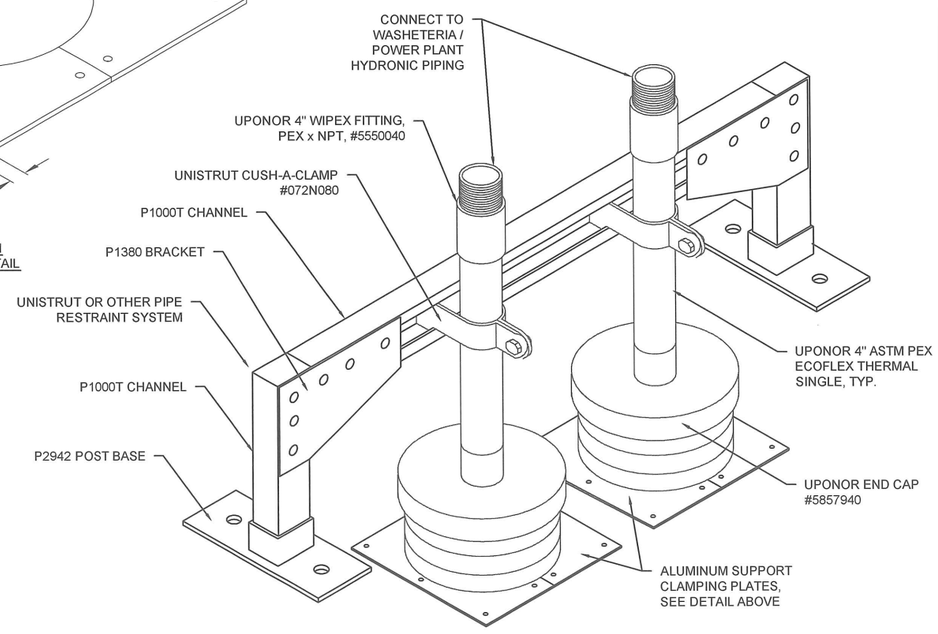

4 / C6.2 ECOFLEX FLOOR PENETRATION DETAIL
SCALE: NTS

RECORD DRAWING CERTIFICATE

THESE DRAWINGS REFLECT RECORDED INFORMATION OBTAINED DURING CONSTRUCTION. INFORMATION PROVIDED HEREIN IS ACCURATE TO THE BEST OF MY KNOWLEDGE.

NAME DATE

SCALE: AS SHOWN

BAR IS ONE INCH ON ORIGINAL DRAWING
0 1"
IF NOT ONE INCH ON THIS SHEET, ADJUST SCALE ACCORDINGLY

CONSTRUCTION RECORD

FIELD BOOK	
STAKING	
FOREMAN	
AS-BUILT	
INSPECTOR	

STATE OF ALASKA 49TH PAUL C. WESNER CE-10276 REGISTERED PROFESSIONAL ENGINEER

WASHETERIA AND WATER TANK

PIPE DETAILS

CHEFORNAK, ALASKA

CE2 ENGINEERS, INC.
PO BOX 232948 ANCHORAGE, AK 99523 PH: 907-349-1010 FAX: 907-349-1015

REVISION	BY	DATE

Project No. ____
Date MAR. 2014
Designed PCW
Drawn DDR
Approved PCW

Sheet No. C6.2
SHEET ____ OF ____

G:\ACAD\CHEFORNAK\2016 Washeteria and Water Tank\2013 Washeteria and Water Tank\C6.2 FORCEMAIN AND PIPE DETAILS.dwg, 6/15/2016 4:52:38 PM, cmerz, \\Ce2main\LANIER MP C2050/LD520C PCL 6

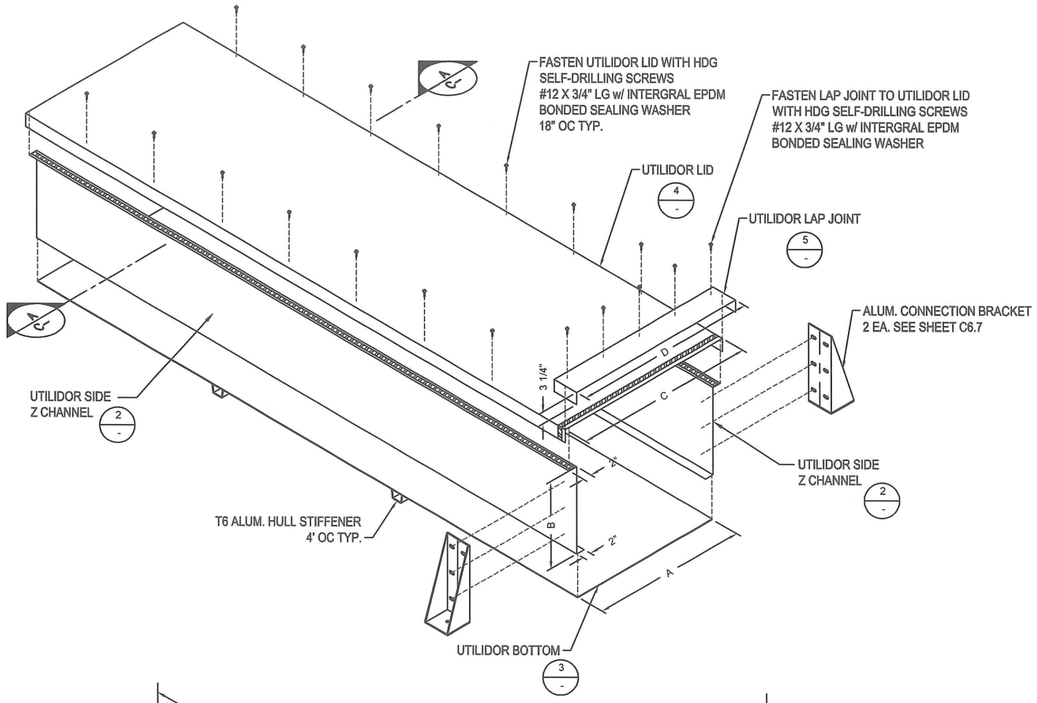

1 C6.3 UTILIDOR ISOMETRIC NTS

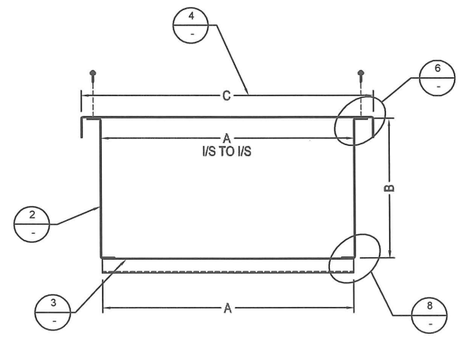

A C6.3 UTILIDOR SECTION NTS

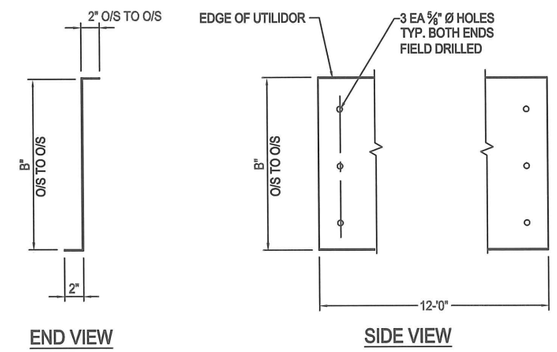

2 C6.3 SIDE Z-CHANNEL DETAILS NTS

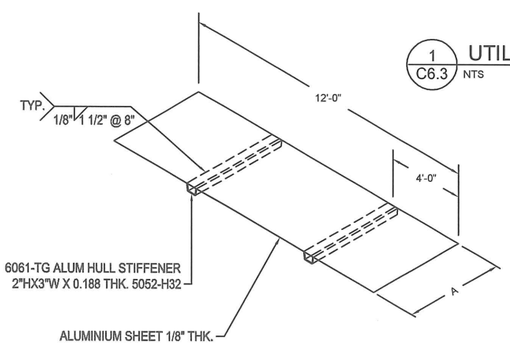

3 C6.3 BOTTOM SHEET DETAIL NTS

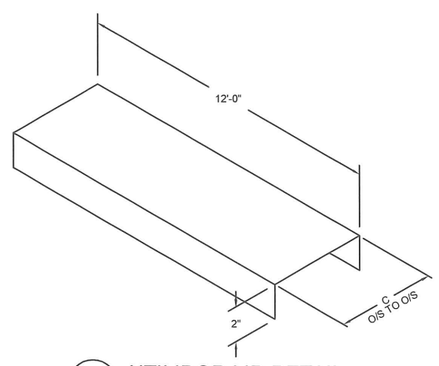

4 C6.3 UTILIDOR LID DETAIL NTS

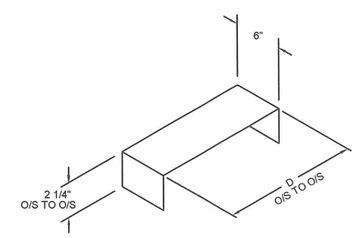

5 C6.3 UTILIDOR LAP JOINT NTS

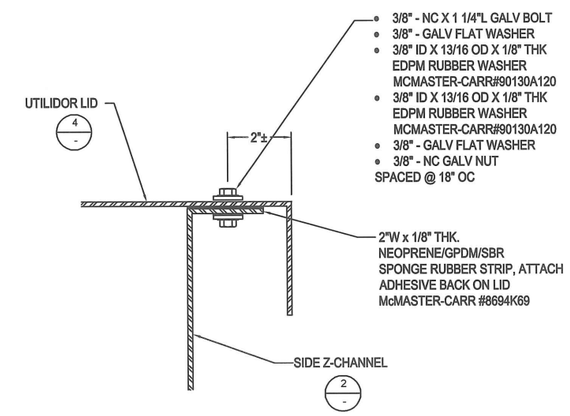

6 C6.3 TOP CORNER DETAILS NTS

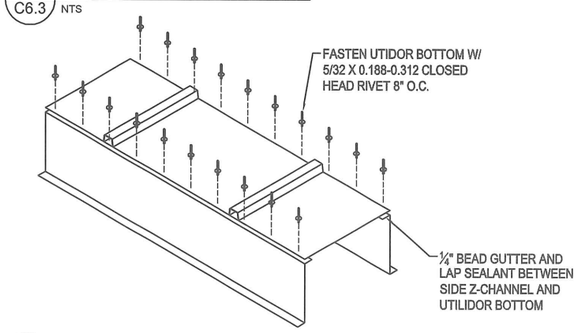

7 C6.3 BOTTOM FASTENING DETAILS NTS

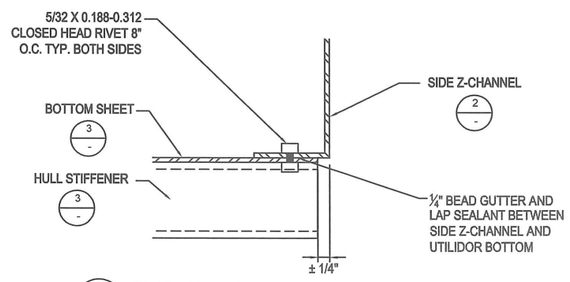

8 C6.3 BOTTOM CORNER DETAILS NTS

NOTE:

1. ALL ALUMINIUM SHALL BE 5052 1/8" THICK, UNLESS OTHERWISE NOTED.
2. BOTTOM OF UTILIDOR WILL BE SEALED W/ BUTUAL ACETATE GUTTER AND LAP SEALANT 1/4" BEAD.
3. FASTEN UTILIDOR BOTTOM W/ RIVETS BEFORE INSTALLING ALUMINIUM HULL STIFFENERS.

RECORD DRAWING CERTIFICATE

THESE DRAWINGS REFLECT RECORDED INFORMATION OBTAINED DURING CONSTRUCTION. INFORMATION PROVIDED HEREIN IS ACCURATE TO THE BEST OF MY KNOWLEDGE.

NAME DATE

SCALE: AS SHOWN

BAR IS ONE INCH ON ORIGINAL DRAWING 0 1"

IF NOT ONE INCH ON THIS SHEET, ADJUST SCALES ACCORDINGLY

CONSTRUCTION RECORD

FIELD BOOK

STAKING

FOREMAN

AS-BUILT

INSPECTOR

STATE OF ALASKA 49TH PAUL C. WEBSER CE-10276 REGISTERED PROFESSIONAL ENGINEER

WASHETERIA AND WATER TANK

UTILIDOR DETAILS

CHEFORNAK, ALASKA

CE2 ENGINEERS, INC.
PO BOX 232246 ANCHORAGE, AK 99523 PH: 907-349-1010 FAX: 907-349-1015

REVISION	BY	DATE

Project No. ____
Date JUNE 2016
Designed PCW
Drawn CM
Approved PCW

Sheet No. C6.3
SHEET ____ OF ____

G:\ACAD\CHEFORNAK\2016 Washeteria and Water Tank\C6.3 Utilidor Details 2.dwg, 6/15/2016 4:36:15 PM, cmerz, \\Ce2main\LANIER MP C2050/LD520C PCL 6

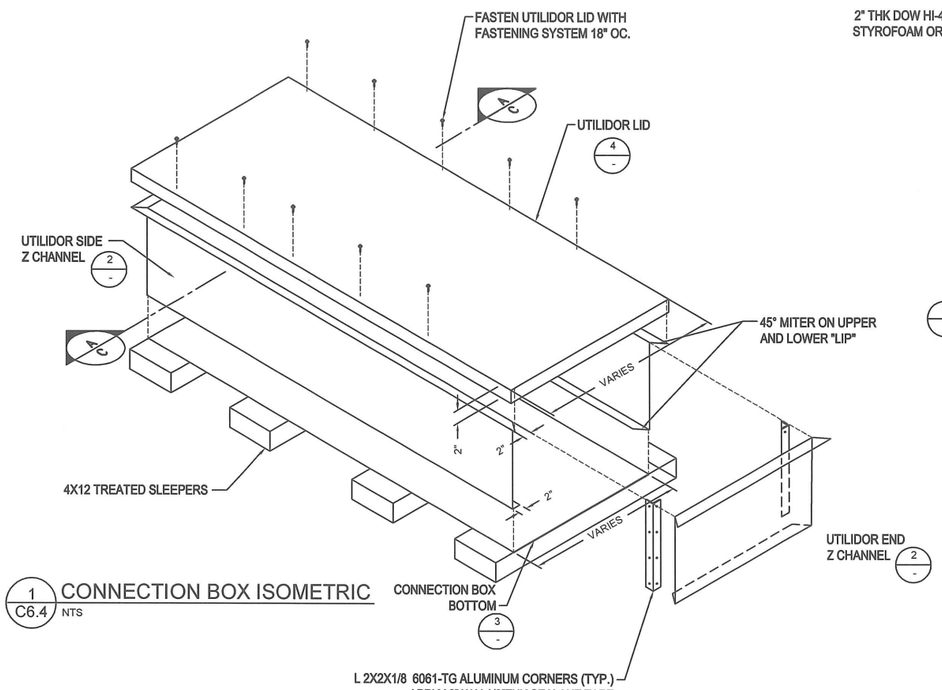

1 / C6.4 CONNECTION BOX ISOMETRIC
NTS

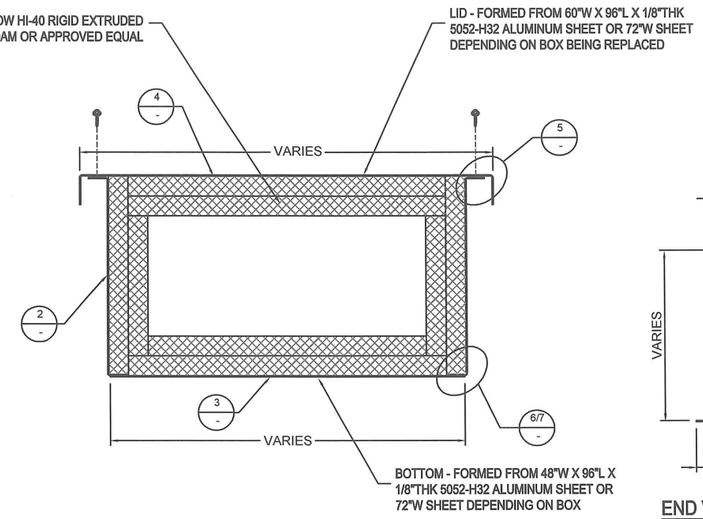

A / C6.4 CONNECTION BOX SECTION
NTS

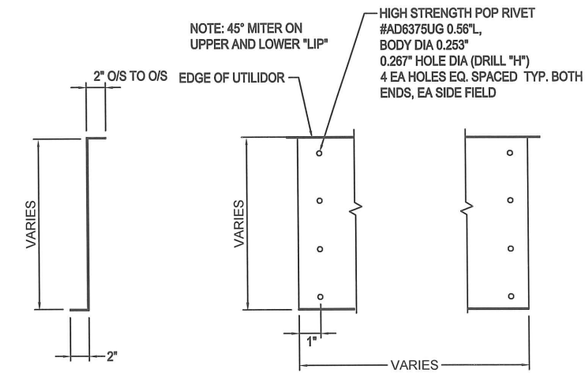

2 / C6.4 SIDE & END Z-CHANNEL DETAILS
NTS

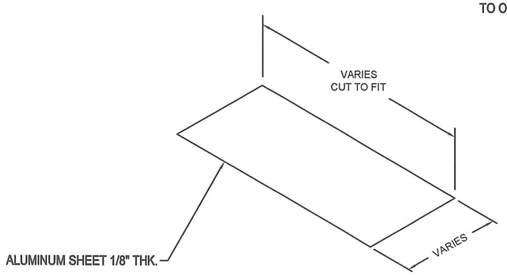

3 / C6.4 BOTTOM SHEET DETAIL
NTS

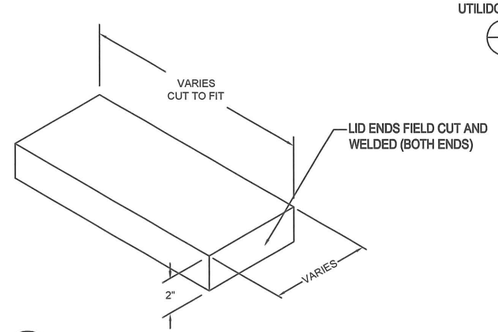

4 / C CONNECTION BOX LID DETAIL
NTS

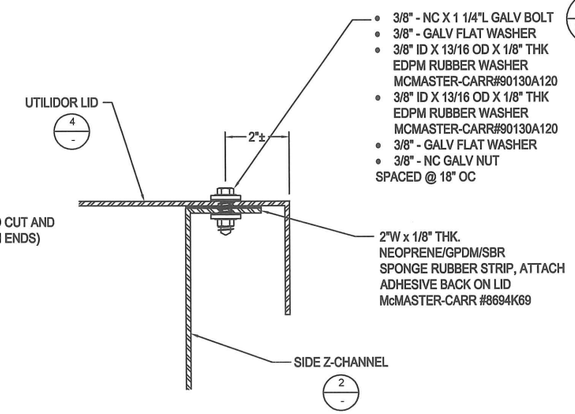

5 / C6.4 TOP BOLTED DETAIL
NTS

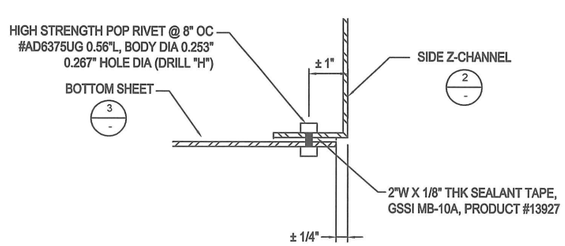

6 / C6.4 BASE SEAM DETAIL (EXCEPT AT SLEEPERS)
NTS

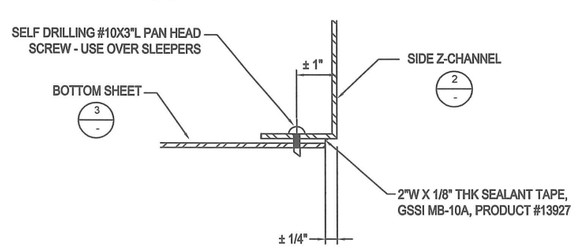

7 / C6.4 BASE SEAM DETAIL (AT SLEEPERS)
NTS

NOTE:

1. ALL ALUMINUM SHALL BE 5052-H32 1/8" THICK, UNLESS OTHERWISE NOTED.
2. BOTTOM OF UTILIDOR WILL BE SEALED W/ 2"W X 1/8" THK SEALANT TAPE, GSSI MB-10A, PRODUCT #13927

RECORD DRAWING CERTIFICATE
THESE DRAWINGS REFLECT RECORDED INFORMATION OBTAINED DURING CONSTRUCTION. INFORMATION PROVIDED HEREIN IS ACCURATE TO THE BEST OF MY KNOWLEDGE.
NAME DATE

SCALE: AS SHOWN
BAR IS ONE INCH ON ORIGINAL DRAWING
0 1"
IF NOT ONE INCH ON THIS SHEET, ADJUST SCALE ACCORDINGLY

CONSTRUCTION RECORD
FIELD BOOK
STAKING
FOREMAN
AS-BUILT
INSPECTOR

STATE OF ALASKA 49TH PAUL C. WESNER CE-10276 REGISTERED PROFESSIONAL ENGINEER

2013 WATER DISTRIBUTION AND WATERING POINTS
CONNECTION BOX DETAILS
CHEFORNAK, ALASKA

CE2 ENGINEERS, INC.
PO BOX 223248 ANCHORAGE, AK 99523 PH: 907-349-1010 FAX: 907-349-1015

REVISION	BY	DATE

Project No. ____
Date APRIL 2013
Designed PCW
Drawn LAW
Approved PCW

Sheet No. C6.4
SHEET ____ OF ____

G:\ACAD\CHEFORNAK\2016 Washeteria and Water Tank\C6.4 CONNECTION BOX DETAILS.dwg, 6/15/2016 4:35:52 PM, cmerz, \\Ce2main\LANIER MP C2050/LD520C PCL 6

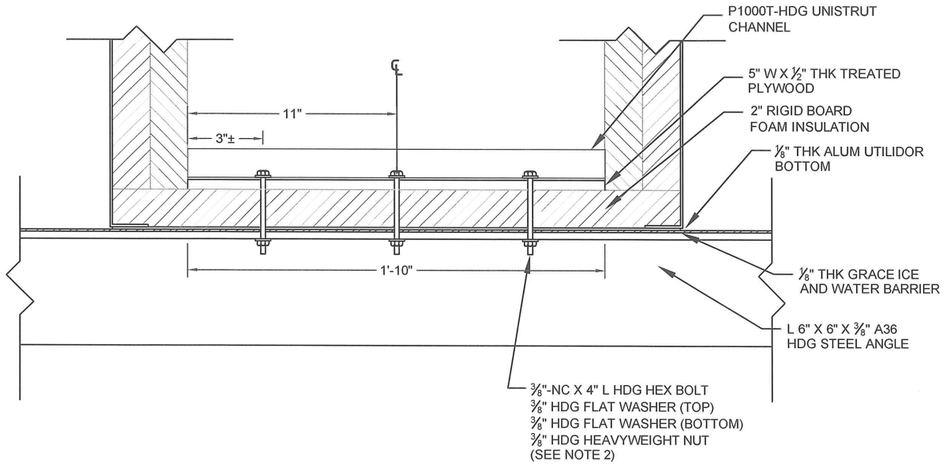

1 / C6.5 PIPE ANCHOR ASSEMBLY FASTENER LAYOUT
NTS

NOTES:

1. PLACE PIPE ANCHOR ASSEMBLY EVERY OTHER UTILIDOR SECTION (12' ± O.C.), AND BEFORE AND AFTER EACH UTILIDOR JUMP.
2. WHEN CONNECTING TO 4X12 SLEEPER REPLACE WITH ⅜" X 6" HDG LAG SCREW AND ⅜" HDG FLAT WASHER.
3. INSULATION AND PIPE CLAMPS NOT SHOWN ON FASTENER LAYOUT FOR CLARITY

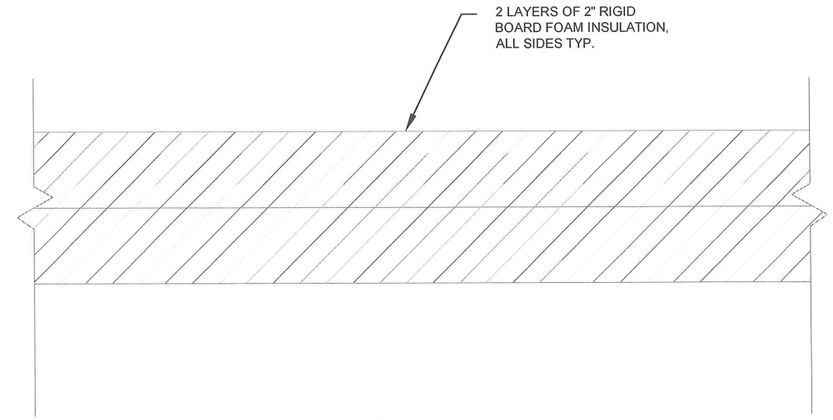

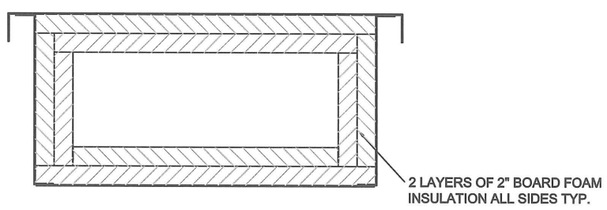

2 / C6.5 TYPICAL INSULATION LAYOUT
NTS

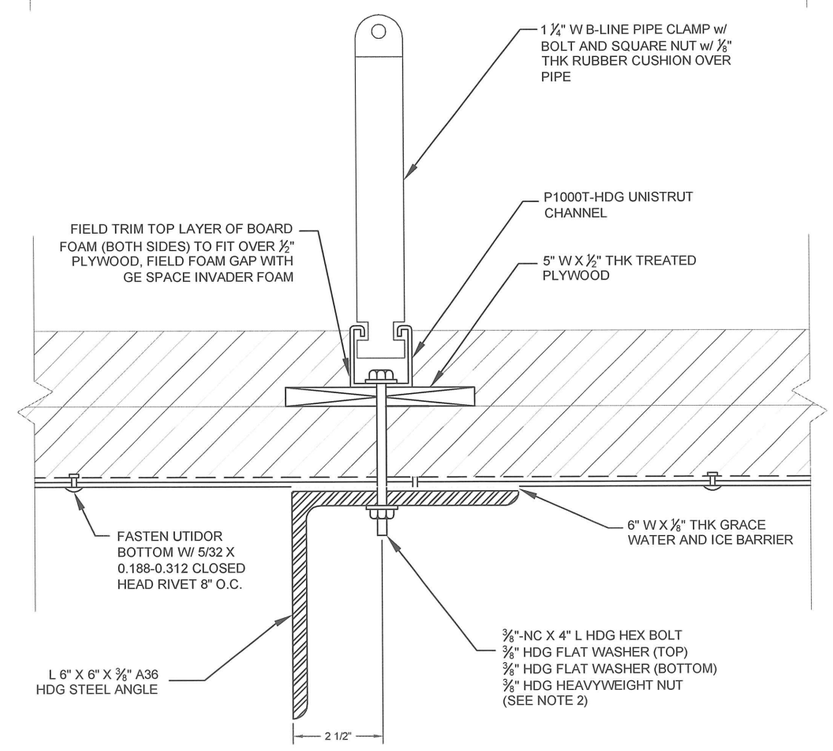

3 / C6.5 PIPE ANCHOR ASSEMBLY TYPICAL SECTION
NTS

RECORD DRAWING CERTIFICATE
THESE DRAWINGS REFLECT RECORDED INFORMATION OBTAINED DURING CONSTRUCTION. INFORMATION PROVIDED HEREIN IS ACCURATE TO THE BEST OF MY KNOWLEDGE.
NAME DATE

SCALE: AS SHOWN
BAR IS ONE INCH ON ORIGINAL DRAWING 0 1"
IF NOT ONE INCH ON THIS SHEET, ADJUST SCALE ACCORDINGLY

CONSTRUCTION RECORD
FIELD BOOK
STAKING
FOREMAN
AS-BUILT
INSPECTOR

STATE OF ALASKA 49TH PAUL C. WESNER CE-10276 REGISTERED PROFESSIONAL ENGINEER

WASHETERIA AND WATER TANK
UTILIDOR PIPE ANCHORING DETAILS
CHEFORNAK, ALASKA

CE2 ENGINEERS, INC.
PO BOX 222948 ANCHORAGE, AK 99503 PH: 907-349-1010 FAX: 907-349-1015

REVISION	BY	DATE

Project No. ___ Date JUNE 2016
Designed PCW
Drawn CM
Approved PCW

Sheet No. C6.5
SHEET ___ OF ___

G:\ACAD\CHEFORNAK\2016 Washeteria and Water Tank\C6.5 Utilidor Pipe Anchor Details.dwg, 6/15/2016 4:35:11 PM, cmerz, \\Ce2main\LANIER MP C2050/LD520C PCL 6

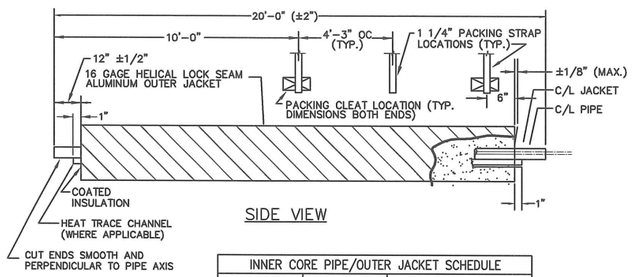

INNER CORE PIPE/OUTER JACKET SCHEDULE		
NOMINAL CORE PIPE DIA.	INNER CORE PIPE O.D.	NOMINAL OUTER JACKET DIA.
4 INCH	4.50"	12 INCH
4 INCH	4.50"	15 INCH
8 INCH	8.625"	18 INCH

1 / C6.6 HDPE ARCTIC PIPE TYPICAL
N.T.S.

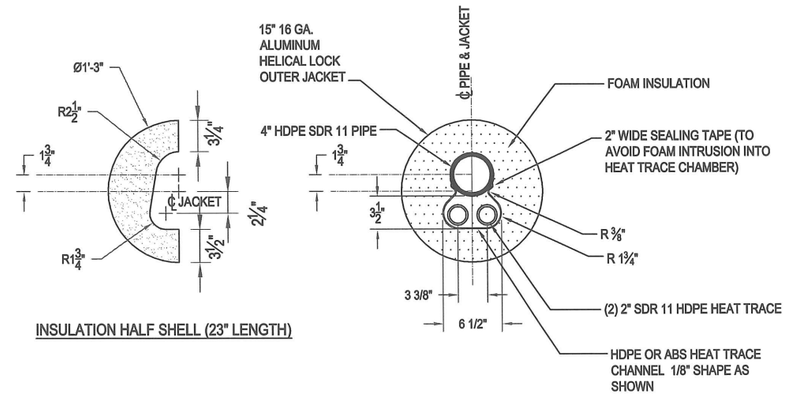

2 / C6.6 4" X 15" HDPE ARCTIC PIPE CROSS SECTION - GLYCOL TRACED
N.T.S.

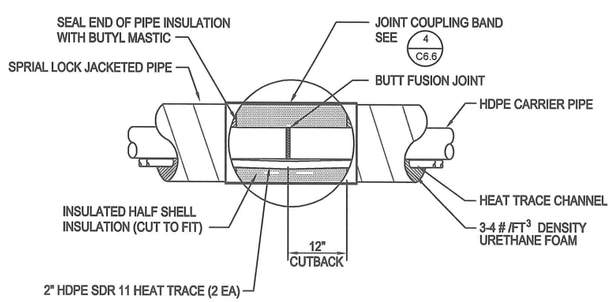

3 / C6.6 TYPICAL BUTT FUSION JOINT
N.T.S.

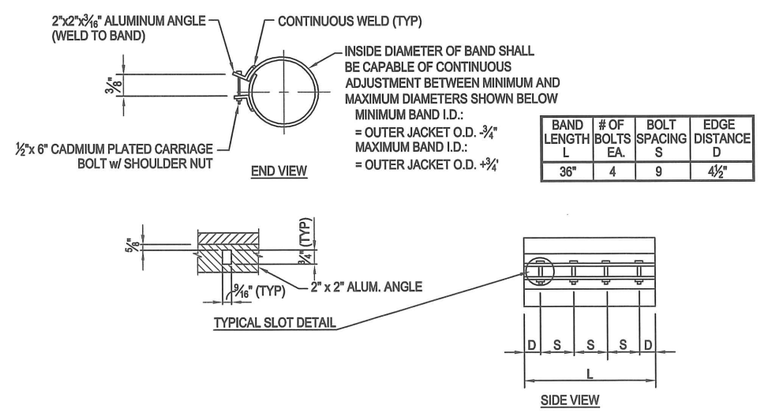

BAND LENGTH L	# OF BOLTS EA.	BOLT SPACING S	EDGE DISTANCE D
36"	4	9	4 1/2"

4 / C6.6 ARCTIC PIPE COUPLING BAND
N.T.S.

RECORD DRAWING CERTIFICATE
THESE DRAWINGS REFLECT RECORDED INFORMATION OBTAINED DURING CONSTRUCTION. INFORMATION PROVIDED HEREIN IS ACCURATE TO THE BEST OF MY KNOWLEDGE.
NAME DATE

SCALE: AS SHOWN
BAR IS ONE INCH ON ORIGINAL DRAWING 0 1"
IF NOT ONE INCH ON THIS SHEET, ADJUST SCALE ACCORDINGLY

CONSTRUCTION RECORD
FIELD BOOK
STAKING
FOREMAN
AS-BUILT
INSPECTOR

STATE OF ALASKA 49TH PAUL C. WEBSER CE-10276 REGISTERED PROFESSIONAL ENGINEER

WASHETERIA AND WATER TANK
ARTIC PIPE DETAILS
CHEFORNAK, ALASKA

CE2 ENGINEERS, INC.
PO BOX 223948 ANCHORAGE, AK 99523 PH: 907-348-1010 FAX: 907-348-1015

REVISION	BY	DATE

Project No. ____ Date JUNE 2016
Designed PCW
Drawn CM
Approved PCW

Sheet No. C6.6
SHEET ____ OF ____

G:\ACAD\CHEFORNAK\2016 Washeteria and Water Tank\C6.6 ARCTIC PIPE DETAILS.dwg, 6/15/2016 4:34:42 PM, cmerz, \\Ce2main\LANIER MP C2050/LD520C PCL 6

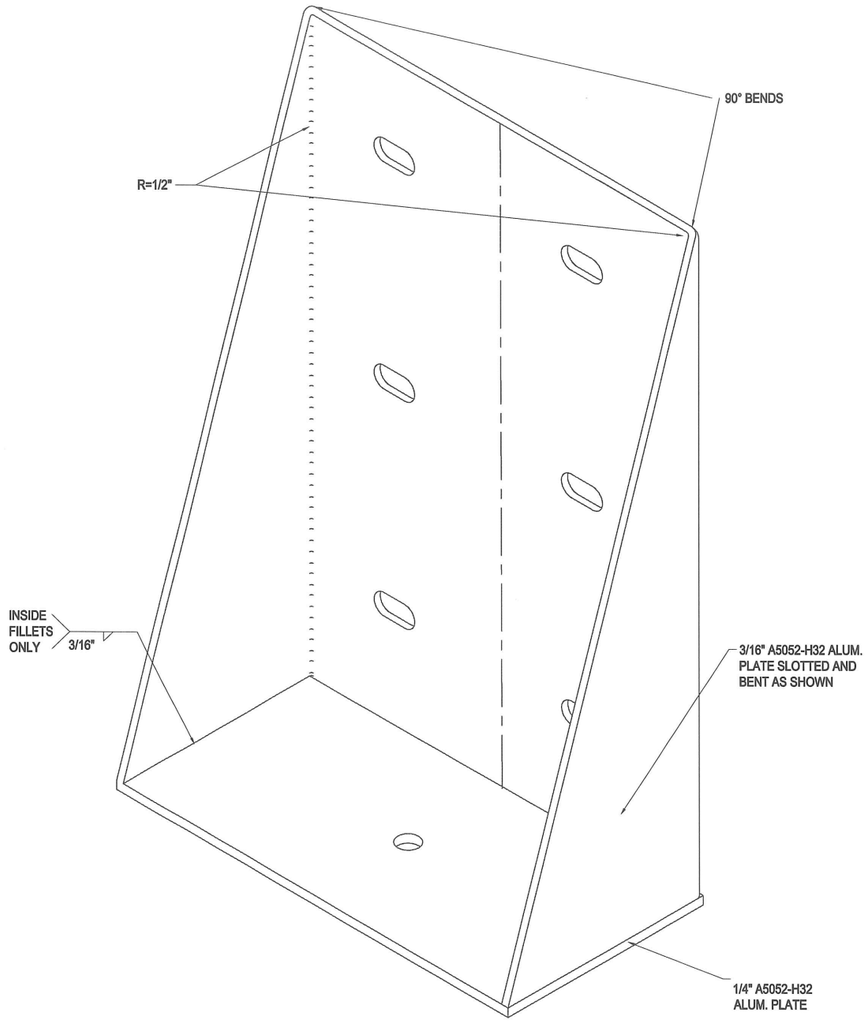

ISOMETRIC VIEW

1 C6.7 UTILIDOR CONNECTION BRACKET ISOMETRIC
NTS

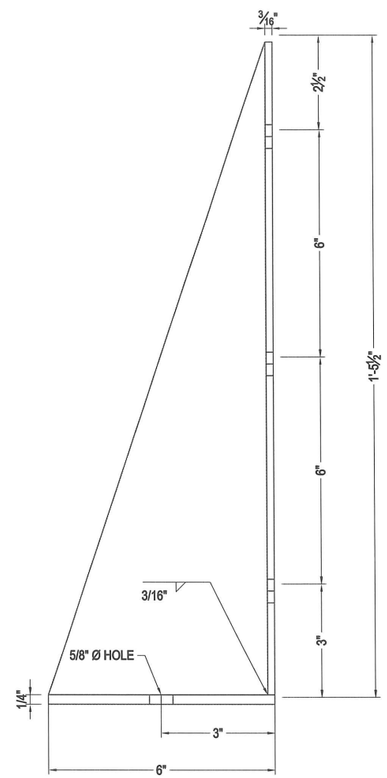

SIDE VIEW

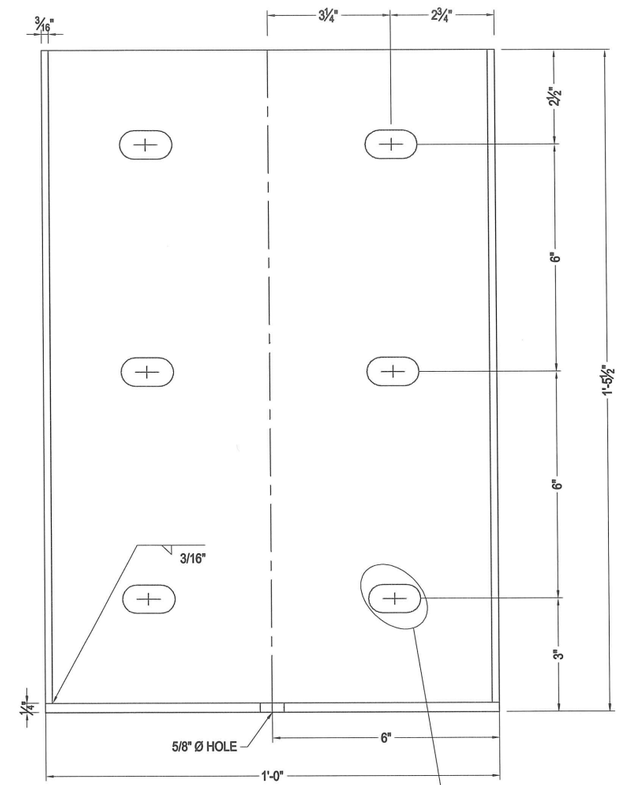

FRONT VIEW

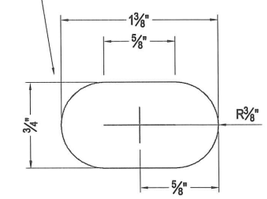

EXPANSION SLOT DETAIL

2 C6.7 UTILIDOR CONNECTION BRACKET DETAILS
NTS

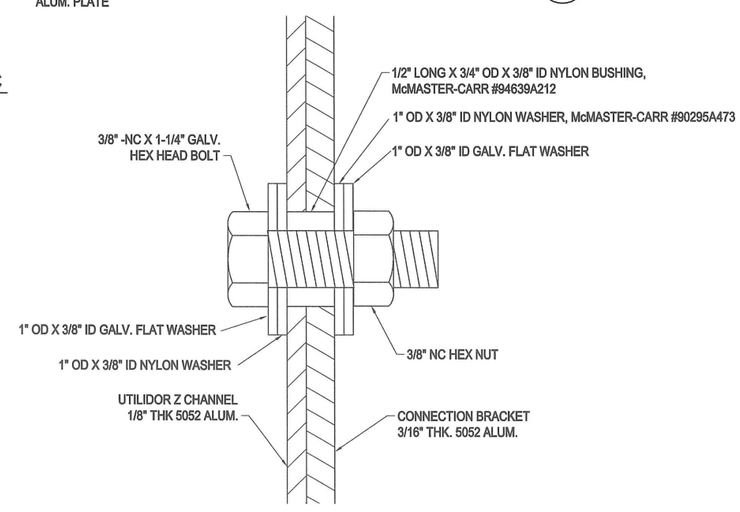

3 C6.7 EXPANSION FASTENING DETAILS
NTS

RECORD DRAWING CERTIFICATE

THESE DRAWINGS REFLECT RECORDED INFORMATION OBTAINED DURING CONSTRUCTION. INFORMATION PROVIDED HEREIN IS ACCURATE TO THE BEST OF MY KNOWLEDGE.

NAME DATE

SCALE: AS SHOWN

BAR IS ONE INCH ON ORIGINAL DRAWING
0 1"
IF NOT ONE INCH ON THIS SHEET, ADJUST SCALES ACCORDINGLY

CONSTRUCTION RECORD

FIELD BOOK	
STAKING	
FOREMAN	
AS-BUILT	
INSPECTOR	

STATE OF ALASKA 49TH REGISTERED PROFESSIONAL ENGINEER PAUL C. WESNER CE-10276

WASHETERIA AND WATER TANK

UTILIDOR CONNECTION BRACKET DETAILS

CHEFORNAK, ALASKA

CE2 ENGINEERS, INC.
PO BOX 223946 ANCHORAGE, AK 99522 PH: 907-349-1010 FAX: 907-349-1015

REVISION	BY	DATE

Project No. ____
Date JUNE 2016
Designed DWB
Drawn MM
Approved PCW

Sheet No. C6.7
SHEET ____ OF ____

G:\ACAD\CHEFORNAK\2016 Washeteria and Water Tank\C6.7 Utilidor Bracket Details.dwg, 6/15/2016 4:34:13 PM, cmerz, \\Ce2main\LANIER MP C2050/LD520C PCL 6