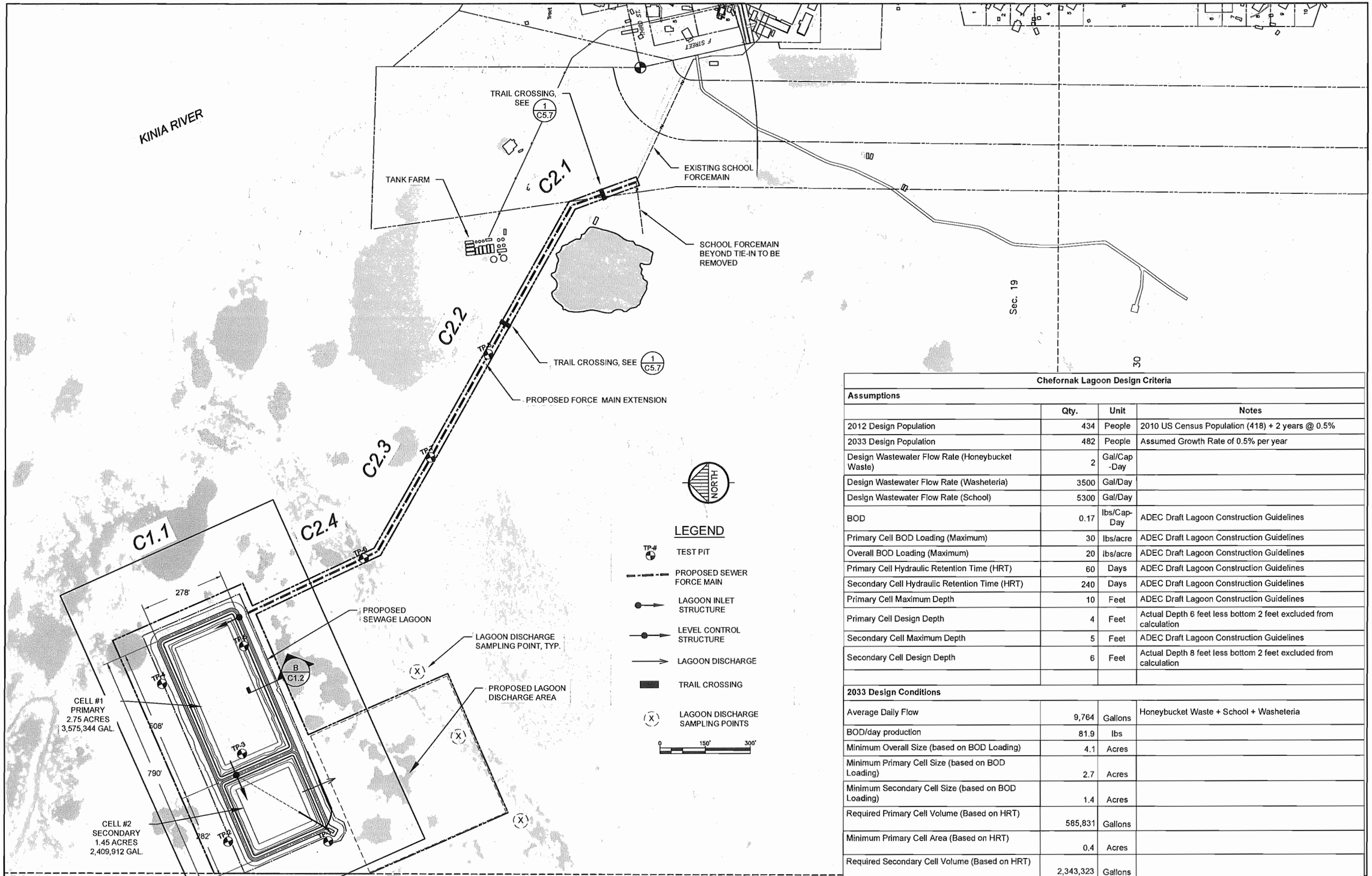

NOTE: DIMENSIONS ARE TO CENTERLINE OF DIKE, AREAS ARE BASED ON WATER SURFACE AND VOLUMES EXCLUDE BOTTOM 2 FEET OF CELLS.

Chefornak Lagoon Design Criteria

Assumptions	Qty.	Unit	Notes
2012 Design Population	434	People	2010 US Census Population (418) + 2 years @ 0.5%
2033 Design Population	482	People	Assumed Growth Rate of 0.5% per year
Design Wastewater Flow Rate (Honeybucket Waste)	2	Gal/Cap -Day	
Design Wastewater Flow Rate (Washeteria)	3500	Gal/Day	
Design Wastewater Flow Rate (School)	5300	Gal/Day	
BOD	0.17	lbs/Cap-Day	ADEC Draft Lagoon Construction Guidelines
Primary Cell BOD Loading (Maximum)	30	lbs/acre	ADEC Draft Lagoon Construction Guidelines
Overall BOD Loading (Maximum)	20	lbs/acre	ADEC Draft Lagoon Construction Guidelines
Primary Cell Hydraulic Retention Time (HRT)	60	Days	ADEC Draft Lagoon Construction Guidelines
Secondary Cell Hydraulic Retention Time (HRT)	240	Days	ADEC Draft Lagoon Construction Guidelines
Primary Cell Maximum Depth	10	Feet	ADEC Draft Lagoon Construction Guidelines
Primary Cell Design Depth	4	Feet	Actual Depth 6 feet less bottom 2 feet excluded from calculation
Secondary Cell Maximum Depth	5	Feet	ADEC Draft Lagoon Construction Guidelines
Secondary Cell Design Depth	6	Feet	Actual Depth 8 feet less bottom 2 feet excluded from calculation
2033 Design Conditions			
Average Daily Flow	9,764	Gallons	Honeybucket Waste + School + Washeteria
BOD/day production	81.9	lbs	
Minimum Overall Size (based on BOD Loading)	4.1	Acres	
Minimum Primary Cell Size (based on BOD Loading)	2.7	Acres	
Minimum Secondary Cell Size (based on BOD Loading)	1.4	Acres	
Required Primary Cell Volume (Based on HRT)	585,831	Gallons	
Minimum Primary Cell Area (Based on HRT)	0.4	Acres	
Required Secondary Cell Volume (Based on HRT)	2,343,323	Gallons	
Minimum Secondary Cell Area (Based on HRT)	1.4	Acres	
Minimum Primary Cell Size	**2.7**	**Acres**	BOD Loading Controls
Minimum Secondary Cell Size	**2,343,323**	**Gallons**	Hydraulic Retention Time Controls

RECORD DRAWING CERTIFICATE
THESE DRAWINGS REFLECT RECORDED INFORMATION OBTAINED DURING CONSTRUCTION. INFORMATION PROVIDED HEREIN IS ACCURATE TO THE BEST OF MY KNOWLEDGE.
NAME DATE

SCALE: AS SHOWN
BAR IS ONE INCH ON ORIGINAL DRAWING
IF NOT ONE INCH ON THIS SHEET, ADJUST SCALES ACCORDINGLY

CONSTRUCTION RECORD
FIELD BOOK
STAKING
FOREMAN
AS-BUILT
INSPECTOR

2/9/16

STATE OF ALASKA 49TH Michael R. Erdman No. 6252 REGISTERED PROFESSIONAL ENGINEER

FACULTATIVE LAGOON
KEY MAP AND DESIGN CRITERIA
CHEFORNAK, ALASKA

CE2 ENGINEERS, INC.
PO BOX 22946 ANCHORAGE, AK 99523 PH: 907-349-1010 FAX: 907-349-1015

REVISION	BY	DATE
~~MONITORING WELLS~~	~~CM~~	~~10/15~~
CELL 1 - BOTTOM ELEV.	CM	11/15

Project No.
Date APR. 2015
Designed MRE
Drawn CM
Approved MRE

Sheet No. C1.0

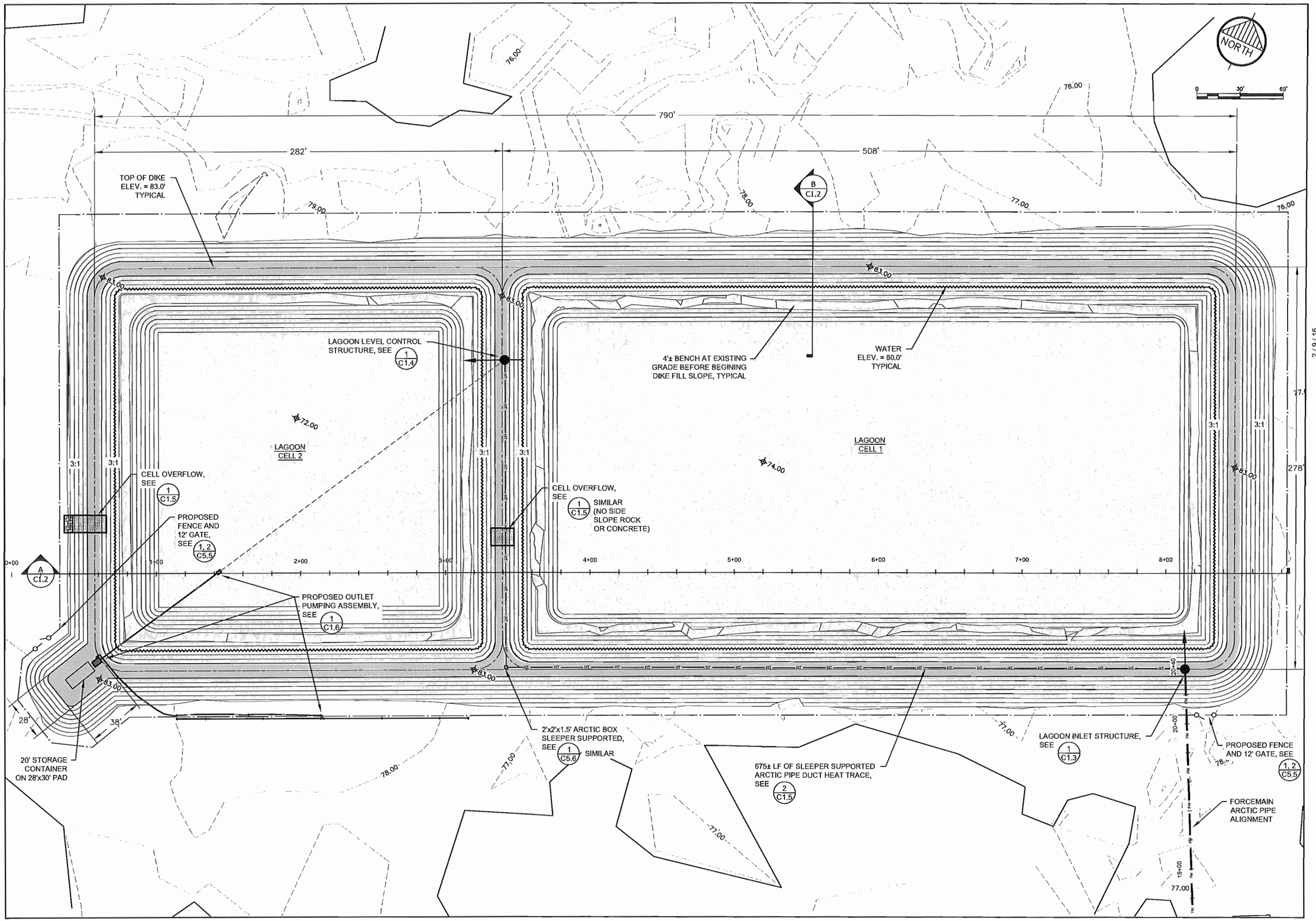

RECORD DRAWING CERTIFICATE

THESE DRAWINGS REFLECT RECORDED INFORMATION OBTAINED DURING CONSTRUCTION. INFORMATION PROVIDED HEREIN IS ACCURATE TO THE BEST OF MY KNOWLEDGE.

NAME DATE

SCALE: AS SHOWN

BAR IS ONE INCH ON ORIGINAL DRAWING

IF NOT ONE INCH ON THIS SHEET, ADJUST SCALES ACCORDINGLY

CONSTRUCTION RECORD

FIELD BOOK

STAKING

FOREMAN

AS-BUILT

INSPECTOR

STATE OF ALASKA 49TH Michael R. Erdman No. 6252 REGISTERED PROFESSIONAL ENGINEER

2 / 9 / 16

FACULTATIVE LAGOON

LAGOON SITE PLAN

CHEFORNAK, ALASKA

CE2 ENGINEERS, INC.

PO BOX 222946 ANCHORAGE, AK 99523 PH: 907-349-1010 FAX: 907-349-1015

REVISION	BY	DATE
CELL 1 - BOTTOM ELEV.	CM	11/15

Project No. ____

Date APR. 2015

Designed MRE

Drawn CM

Approved MRE

Sheet No.

C1.1

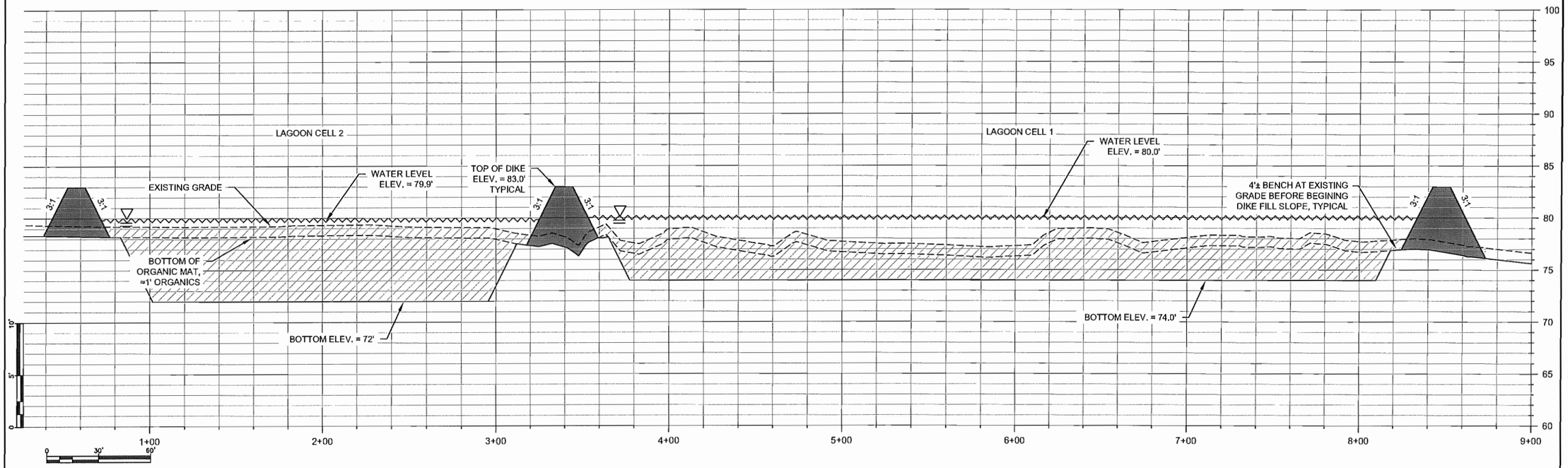

A LAGOON CROSS-SECTION

1:6 VERTICAL EXAGGERATION

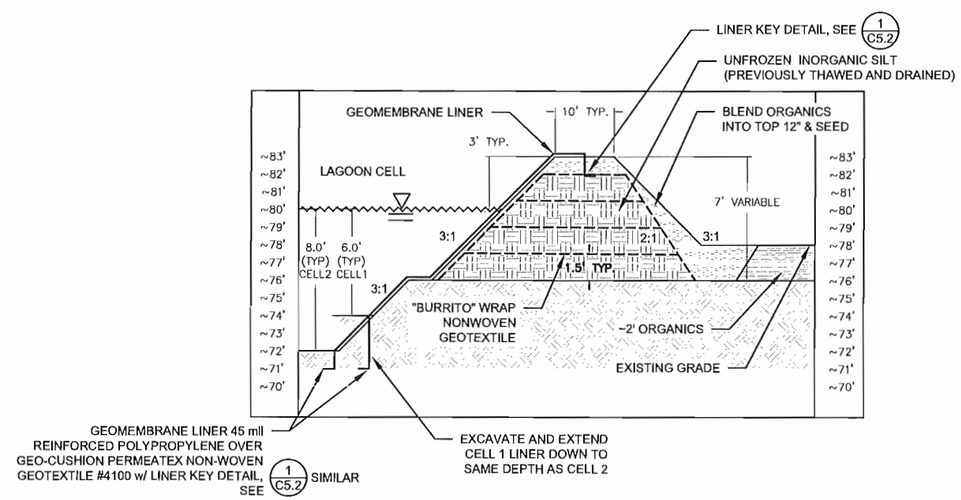

B TYPICAL DIKE CROSS-SECTION

3:1 VERTICAL SCALE

RECORD DRAWING CERTIFICATE

THESE DRAWINGS REFLECT RECORDED INFORMATION OBTAINED DURING CONSTRUCTION. INFORMATION PROVIDED HEREIN IS ACCURATE TO THE BEST OF MY KNOWLEDGE.

NAME DATE

SCALE: AS SHOWN

BAR IS ONE INCH ON ORIGINAL DRAWING

IF NOT ONE INCH ON THIS SHEET, ADJUST SCALES ACCORDINGLY

CONSTRUCTION RECORD

FIELD BOOK

STAKING

FOREMAN

AS-BUILT

INSPECTOR

2 / 9 / 16

STATE OF ALASKA 49TH MICHAEL R. ERTMAN NO. 8252 REGISTERED PROFESSIONAL ENGINEER

FACULTATIVE LAGOON

LAGOON CROSS SECTIONS

CHEFORNAK, ALASKA

CE2 ENGINEERS, INC.

PO BOX 223345 ANCHORAGE, AK 99522 PH: 907-345-1018 FAX: 907-345-1015

REVISION	BY	DATE
~~MONITORING WELL~~	~~CM~~	~~10/15~~
CELL 1 - BOTTOM ELEV.	CM	11/15
REVISE SECTION DETAIL	CM	2/16

Project No.

Date APR. 2015

Designed MRE

Drawn CM

Approved MRE

Sheet No.

C1.2

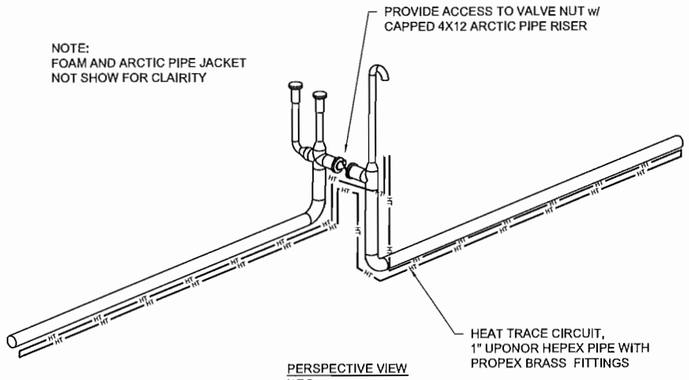

PERSPECTIVE VIEW
N.T.S.

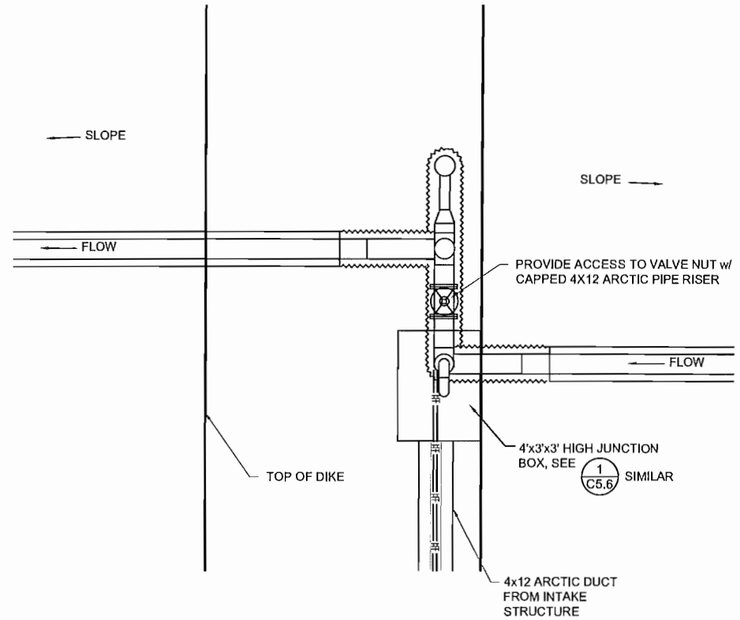

PLAN VIEW
3/8" = 1'-0"

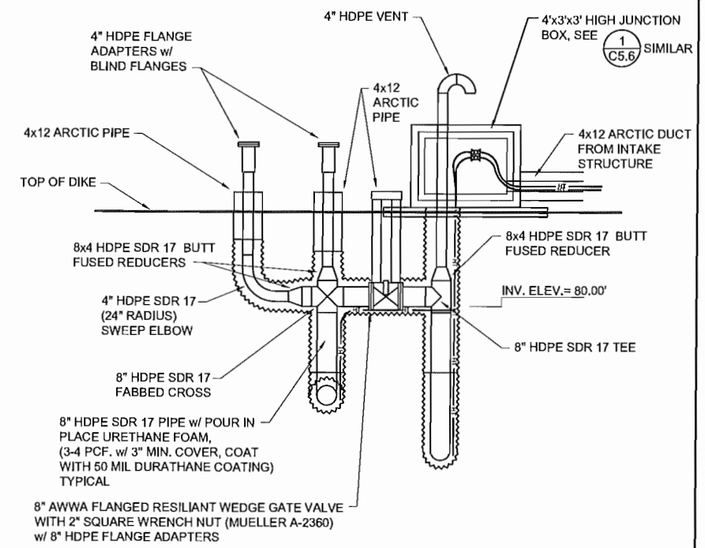

3/8" = 1'-0"
ELEVATION VIEW

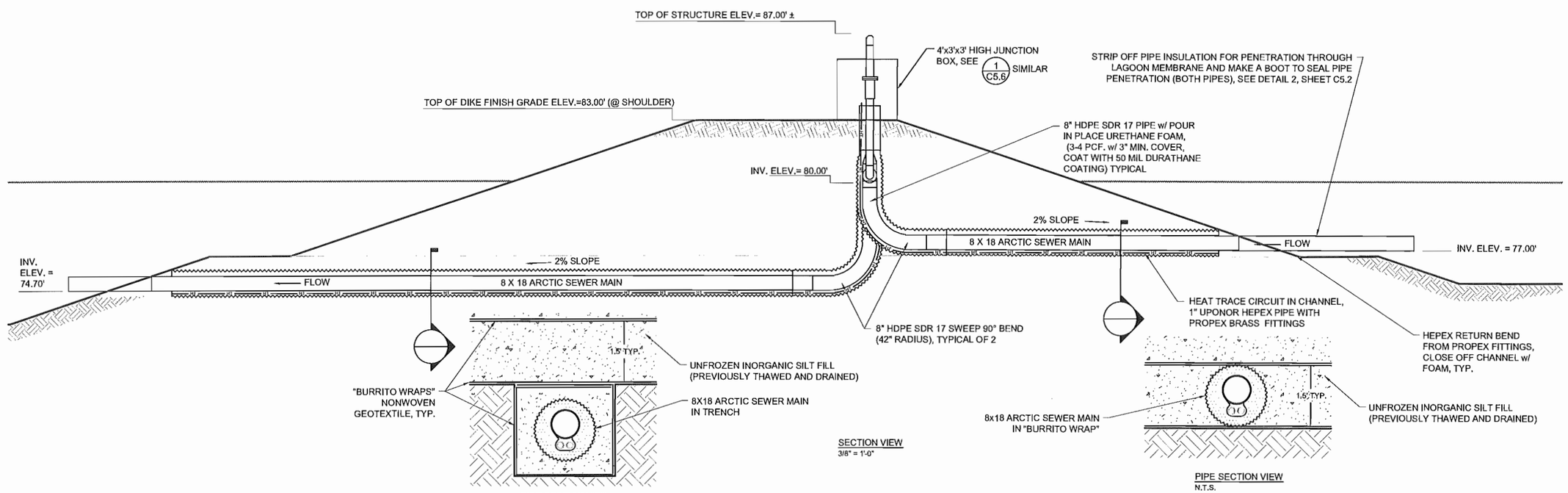

SECTION VIEW
3/8" = 1'-0"

PIPE SECTION VIEW
N.T.S.

PIPE SECTION VIEW
N.T.S.

1/C1.4 CELL TRANSFER STRUCTURE

NTS

RECORD DRAWING CERTIFICATE
THESE DRAWINGS REFLECT RECORDED INFORMATION OBTAINED DURING CONSTRUCTION. INFORMATION PROVIDED HEREIN IS ACCURATE TO THE BEST OF MY KNOWLEDGE.
NAME
DATE

SCALE: AS SHOWN
BAR IS ONE INCH ON ORIGINAL DRAWING
0 1"
IF NOT ONE INCH ON THIS SHEET, ADJUST SCALES ACCORDINGLY

CONSTRUCTION RECORD
FIELD BOOK
STAKING
FOREMAN
AS-BUILT
INSPECTOR

2/9/16

STATE OF ALASKA
49TH
MICHAEL R. ESTRINA
No. 12252
REGISTERED PROFESSIONAL ENGINEER

FACULTATIVE LAGOON

CELL TRANSFER STRUCTURE

CHEFORNAK, ALASKA

CE2 ENGINEERS, INC.
PO BOX 223046 ANCHORAGE, AK 99522 Ph: 907-345-1015 FAX: 907-345-1015

REVISION	BY	DATE
CELL 1 - BOTTOM ELEV.	CM	11/15
PIPE SECTIONS	CM	2/16

Project No.
Date APR. 2015
Designed MRE
Drawn CM
Approved MRE

Sheet No.
C1.4