CHEFORNAK TRADITIONAL COUNCIL

1998 WATER AND SEWER SYSTEM IMPROVEMENTS

In Cooperation with the State of Alaska
Department of Environmental Conservation
And Village Safe Water Program

PRELIMINARY – NOT FOR CONSTRUCTION

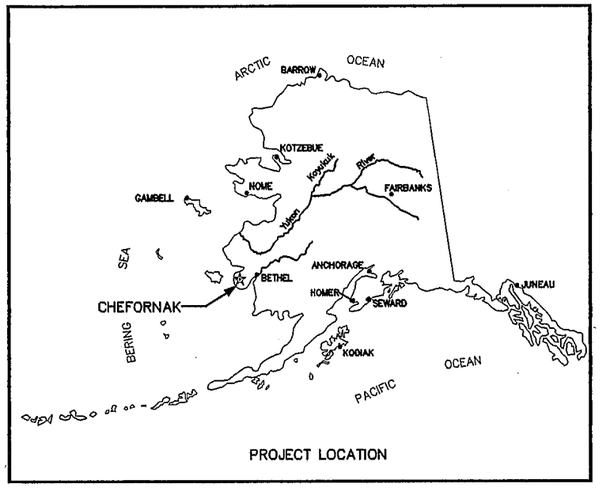

PROJECT LOCATION

Location Map

CE 2

CONSULTING ENGINEERS

STATE OF ALASKA 49TH Lloyd A. Parsson NO. CE 9692 REGISTERED PROFESSIONAL ENGINEER

ANCHORAGE, ALASKA

Consultant

RECORD DRAWING CERTIFICATE

STATE OF ALASKA 49TH Lloyd A. Parsson NO. CE 9692 REGISTERED PROFESSIONAL ENGINEER

THESE DRAWINGS REFLECT RECORDED INFORMATION OBTAINED DURING CONSTRUCTION.
INFORMATION PROVIDED HEREIN IS ACCURATE TO THE BEST OF MY KNOWLEDGE.

NAME DATE

Construction Foreman _____

Final Design (Date) AUGUST 1998

ADEC Approval (Date) _____

Construction Period (From) _____ (To) _____

As-Builts (Date) _____

SHEET INDEX

No.	Title
	COVER SHEET AND DRAWING INDEX
G-1	SYSTEM PICTORIAL AND DESIGN CRITERIA
G-2	GENERAL NOTES, LEGEND AND BASIS OF BEARING
C-1	WATERMAIN PIPING AND BOARDWALK
C-2	WATERMAIN PIPING AND BOARDWALK
C-3	WELL FIELD PIPING
C-4	WELL FIELD PIPING
C-5	WASTE HEAT RECOVERY WATERMAIN EXTENSION
C-6	BOARDWALK AND PIPELINE SUPPORT DETAILS
C-7	ARCTIC PIPING DETAILS
C-8	BOARDWALK SITE PLAN
C-9	BOARDWALK SITE PLAN
C-10	NOT USED
C-11	WATER TREATMENT PLANT SITE WORK
C-12	[RESERVED FOR HONEY BUCKET LAGOON CLOSE-OUT]
S-1	BOARDWALK CONSTRUCTION DETAILS
S-2	NOT USED
M-1	SYSTEM SCHEMATIC, LEGEND AND GENERAL NOTES
M-2	WELL CONNECTION DETAILS
M-3	DROP PIPE WELL CONNECTION DETAILS
M-4	PUMPHOUSE MODIFICATIONS
M-5	PLUMBING IMPROVEMENTS DETAILS
M-6	PLUMBING IMPROVEMENTS FLOOR PLANS AND LEGEND
M-7	PLUMBING IMPROVEMENTS FLOOR PLANS
M-8	PLUMBING IMPROVEMENTS FLOOR PLANS, ISOMETRICS AND DETAIL
M-9	WATER/SEWER HAUL VEHICLES, TRAILERS AND TANKS
M-10	WASTE HEAT RECOVERY WATERMAIN EXTENSION
M-11	WASTE HEAT RECOVERY BUILDING DETAILS
M-12	WASTE HEAT RECOVERY PIPING DETAILS
M-13	WATERING POINT UPGRADES
E-PL-1	OVERHEAD POWER DISTRIBUTION LINE EXTENSION
E-PL-2	OVERHEAD POWER DISTRIBUTION LINE DETAILS
E-PL-3	TEMPORARY POWER ONE-LINE DIAGRAM
E-WH-1	WASTE HEAT RECOVERY LIGHTING, VENTILATION, EQUIPMENT AND CONTROL PLAN
E-WH-2	WASTE HEAT RECOVERY CIRCUIT DIAGRAM AND PANEL LAYOUT
E-WH-3	WASTE HEAT RECOVERY CONTROL PANEL LADDER DIAGRAM
E-WP-1	WELL FIELD SYSTEMS CONTROL PANEL
E-WP-2	WELL 9, 10, 11 CONTROL LADDER
E-WP-3	WATERING POINT ENCLOSURE INTERIOR, POWER AND CONTROL WIRING

PROJECT DESCRIPTION

ID NUM.	DESCRIPTION
1	WELL WATER ABOVE GROUND CIRCULATION LOOP – APPROXIMATELY 1000 LF OF CIRCULATION WELL WATER LOOP PIPING SUPPORTED ON HELICAL PIER ANCHORS AT 10 FEET ON CENTER. THE LOOP CONNECTS THREE EXISTING WELLS (WW–9, WW–10 AND WW–11) TO THE FUTURE WATER TREATMENT PLANT.
2	A FUTURE WATER TREATMENT PLANT AND WATER STORAGE TANK SHALL BE CONSTRUCTED AT THIS LOCATION AT A LATER DATE. THE WATER TREATMENT PLANT SHALL BE APPROXIMATELY 2,400 SQUARE FEET IN SIZE AND SHALL CONTAIN WATER FILTRATION AND PURIFICATION EQUIPMENT, LABORATORY WITH TEST EQUIPMENT, PRESSURIZATION SYSTEM, LOOP CIRCULATOR PUMPS, HEATING AND WATER STORAGE TANK LEVEL CONTROL. THE WATER TANK IS EXPECTED TO HAVE A 212,000–GALLON CAPACITY AND CONSTRUCTED WITH BOLT TOGETHER STEEL PANELS WITH AN INSULATION SHELL.
3	BOARDWALK AND CIRCULATION LOOP PIPING – A 12' WIDE HELICAL PIER SUPPORTED BOARDWALK SHALL BE CONSTRUCTED APPROXIMATELY 1000 LF FROM THE EXISTING PUMPHOUSE TO THE FUTURE WATER TREATMENT PLANT SITE. THE BOARDWALK SHALL SUPPORT A CIRCULATING WATER LOOP.
4	WASTE HEAT RECOVERY – EXCESS HEAT SHALL BE RECOVERED FROM THE CHEFORNAK LIGHT PLANT AND UTILIZED FOR HEATING THE WATER DISTRIBUTION SYSTEM AND OFFSETTING HEATING FUEL REQUIREMENTS. THE HEAT RECOVERY SYSTEM INCLUDES APPROXIMATELY 1,000 LF OF ABOVE GROUND WATER MAIN PIPING, A NEW HEAT RECOVERY BUILDING AND POWER GENERATOR COOLING SYSTEM IMPROVEMENTS. SEE SHEETS M–10 THROUGH M–13.

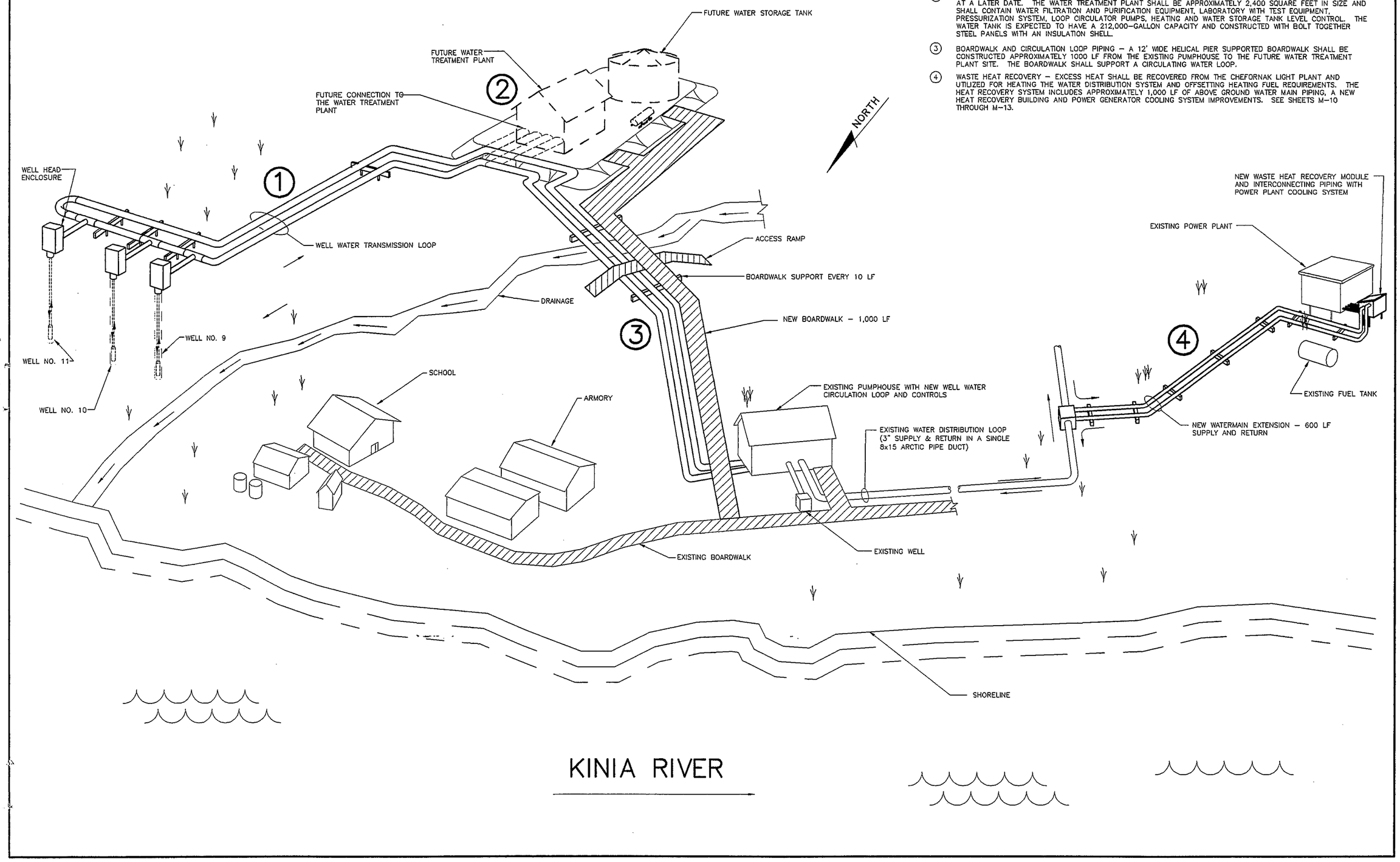

RECORD DRAWING CERTIFICATE

THESE DRAWINGS REFLECT RECORDED INFORMATION OBTAINED DURING CONSTRUCTION. INFORMATION PROVIDED HEREIN IS ACCURATE TO THE BEST OF MY KNOWLEDGE.

NAME DATE

SCALE: NTS

BAR IS ONE INCH ON ORIGINAL DRAWING 0 1"

IF NOT ONE INCH ON THIS SHEET, ADJUST SCALES ACCORDINGLY

CONSTRUCTION RECORD

FIELD BOOK

STAKING

FOREMAN

AS–BUILT

INSPECTOR

STATE OF ALASKA 4916 REGISTERED PROFESSIONAL ENGINEER Lloyd A. Pierson No. CE 8902

WATER AND SEWER SYSTEM IMPROVEMENTS

SYSTEM PICTORIAL AND DESIGN CRITERIA

CHEFORNAK, ALASKA

CE2 ENGINEERS, INC.

ANCHORAGE, ALASKA

REVISION	BY	DATE

Project No. ____ Date MAY 1998 Designed LAP Drawn D–J.W. Approved CLE

Sheet No. G–1

SHEET 2 OF 39

GENERAL NOTES

1. All construction shall be done in a safe workmanlike manner to industry standards and in conformance with applicable local state and federal codes and regulations.

2. MATERIALS
   - A. Mainline Water — 4 and 6 inch HDPE, SDR 11 carrier pipe with 2.5 inches minimum thickness of 3.0 – 4.0 lbs/c.f. polyurethane foam insulation, butt fused joints and 12" and 15" diameter, 16 gauge aluminum CMP jacketing.
   - B. Water Service Pipe And Heat Trace — 1 inch HDPE, SDR 9.33 carrier pipe (supply and return) with 5 watt/ft self limiting heat trace.

3. The basis of vertical control is the south rim at the top of the 6" well casing for well WW–2 (see the basis of bearing diagram at right). Elevation 80.75 ft.

4. The basis of horizontal control is the recorded bearing between corners C1 and C2 of U.S. Survey No. 4421. The bearing is S 0°00'00" E (due South) with a recorded distance of 509.68 LF (Meas. 509.35 LF).

5. Existing utilities are shown in approximate location to the best knowledge of the engineer at the time of design. Utility records may not be completely accurate. The project superintendent shall verify horizontal and vertical location of utilities within each construction reach prior to construction. All utilities are buried unless otherwise noted.

Electric – NaterKaq Light Plant	(907) 867–8213
Telephone – United Utilities, Inc.	(800) 478–2020
Water and Sewer – Chefornak Utility Board	(907) 867–6301

6. The project superintendent shall be responsible for maintaining a clean set of as–built "red line" record drawings showing location and swing ties to all manholes, cleanouts, valves, bends, heat trace end seals and service line taps. All elevations shall be marked ASB (as–built) or F.C. (field changed) with the correct value inserted. Drawings shall be kept current in red pencil and updated daily in a neat and legible fashion. A copy of the as–built drawings shall be submitted to the City of Chefornak and the Village Safe Water Project Engineer.

7. The minimum grade for 4 inch sewer service lines shall be 2%.

8. General Restoration – The areas impacted by construction shall be returned to preconstruction condition or better. Construction debris shall be removed from the area and disposed of in a proper manner. Due care and caution shall be taken to avoid disturbing personal property.

9. The construction site shall be adequately protected, restricted and barricaded in the best public interests of health, safety and welfare, with visible and stable BARRIERS, flashing yellow WARNING LIGHTS in good working order, understandable, large–print WARNING SIGNS, and other precautionary equipment and measures as the City may require. All safety measures shall be in conformance with applicable State of Alaska DOT and OSHA safety requirements.

10. EARTHWORK
    - A. Safety Considerations – Sidewalls of trenches and excavations shall be sloped or sufficiently braced in conformance with section 05.160 of the State of Alaska Department of Labor Standards and the latest Federal OSHA excavation and trenching standards to provide a safe working environment. All trenches shall be backfilled before work is stopped for the day. If it becomes necessary to leave a portion of the excavation open and unattended, the open excavations shall be adequately signed and barricaded to warn residents of the hazard.
    - B. Compaction – Compaction shall typically be accomplished by use of a mechanical device such as vibratory plate compactors, shall be compacted in 12 inch maximum lifts to 95% of the backfill material's maximum density.
    - C. Backfill Material – Material within 6 inches of the pipe shall be 2" minus granular, compactable pit run material and shall contain no frozen, organic or saturated material. Except for the maximum particle size, the remaining backfill material shall be similarly restricted, and as shown in the plans.

11. CONCRETE
    - A. Code – Concrete work and reinforcement shall conform to the Uniform Building Code (UBC) 1994 Edition and to all requirements of the American Concrete Institute (ACI) 318–95, Specifications for Structural Concrete for Buildings, except as modified by the following supplemental requirements.

      The UBC shall govern in all matters pertaining to concrete work whenever the UBC is in conflict with the requirements of of ACI 318–95.
    - B. Cement – ASTM C150, Type 3, High Early Strength.
    - C. Aggregate – Shall meet the requirements of ASTM C33.
    - D. Concrete Strength –
      Floor slabs, perimeter foundations and equipment pads.....3000 PSI
      Fence post anchorages.....2500 PSI
    - E. Maximum aggregate size: 1–1/2"
    - F. Slump: 2" to 4"
    - G. Air entrainment: 6% (±1%)
    - H. Mix Design – Mix design is required unless otherwise approved.
    - I. Testing – Four concrete test cylinders for every pour operation of concrete placed and at least once for every structure. Concrete strengths shall be verified by standard 7 and 28 day cylinder tests unless otherwise approved. Perform slump and air tests whenever cylinders are taken.
    - J. Reinforcing Steel – ASTM A615 Grade 60
    - K. Reinforcing Steel Cover – (Unless otherwise noted)

USE OF STEEL REINFORCEMENT	MINIMUM COVER REQUIRED (INCHES)
Slab Bars	1 1/2"
Footings and Slab Bars Cast on Ground	3"
Concrete in Contact With Liquid	2 1/2"

    - L. Chamfers – Except as otherwise required, exposed concrete corners and edges shall have 3/4" chamfers. Reentrant corners shall not have fillets unless otherwise shown.

BASIS OF BEARING

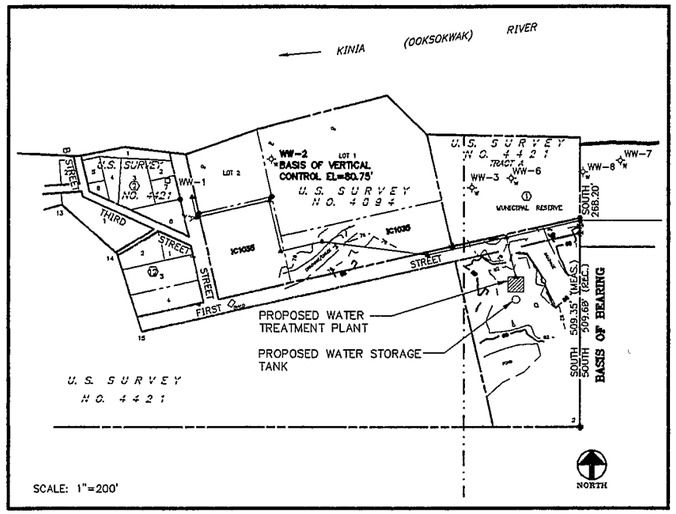

12. TESTING – All testing shall be in conformance with the following requirements.
    - A. All tests shall be witnessed by a representative designated by the owner (City of Chefornak). Upon successful completion of a test the results of the test shall be documented on a test form and acknowledged by signature of the owner's representative witnessing the test and by the contractor. The contractor's red lined as–built drawings shall also note, for each segment of the system tested, the time and date of the test and the name of the owner's witness.
    - B. Water Main Testing – Perform hydrostatic testing of waterlines after open bore flushing and disinfection (see item 13 below). Fill the line with water and remove air prior to starting the test. Pressurize to 1.5 x operating pressure (60 PSI) = 90 PSI and leave for 1 hour. After the initial period, add water to bring the pressure up to 90 PSI and begin a 1–hour test. For the waterline to be accepted, there shall be no loss in pressure during the 1–hour test.
    - C. Residential type water piping testing (hot & cold water supply) – All piping shall be tested and proved tight under an air pressure of fifty (50) pounds per square inch. The piping shall withstand the test without leaking for a period of not less than fifteen (15) minutes.
    - D. Residential type Drain–Waste–Vent (DWV) testing – All piping shall be tested. openings shall be tightly closed, except for the highest opening, and the system filled with water to the point of overflow. No joint or pipe in the building (except the uppermost ten (10) feet of the system) shall be submitted to a test of less than ten (10) foot head of water. the water shall be kept in the system for at least fifteen (15) minutes before the inspection starts. The system shall then be tight at all points.

13. DISINFECTION
    - A. Water Line Disinfection – All potable water pipelines shall be disinfected in accordance with the requirements of AWWA C651–92, and ADEC recommendations. All chlorinated water used for disinfection shall be disposed of in accordance with the requirements of AWWA C651–92 and ADEC.

14. DESIGN CRITERIA

A.	WIND:	110 MPH – EXPOSURE C
B.	SNOW LOAD:	30 PSF ROOF
C.	SEISMIC DESIGN:	ZONE 1
D.	DESIGN TEMPERATURE:	–45°F
E.	HEATING DESIGN:	13,000 HEATING DEGREE DAYS PER YEAR

LEGEND

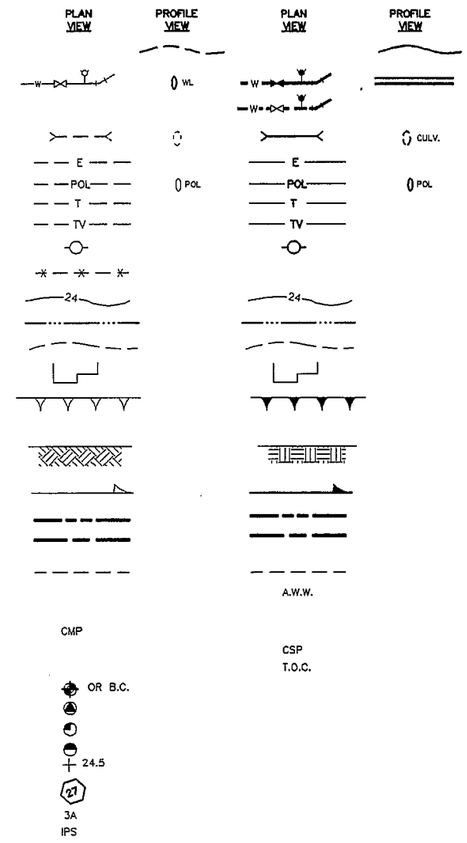

DESCRIPTION
GROUND PROFILE
WATERMAIN, VALVE, HYDRANT, & FITTING
(BUILT FROM ANOTHER SHEET)
CULVERT
OVERHEAD ELECTRIC
PETROLEUM/OIL/LUBRICANTS
TELEPHONE
CABLE TELEVISION
UTILITY POLE
FENCE
CONTOUR LINE
SHORELINE
TRAVELED WAY
STRUCTURE
EARTHWORK SLOPE
NATURAL GROUND OR COMPACTED SOIL
DIRECTION OF DRAINAGE
PROPERTY LINE
SECTION LINE
PERMANENT EASEMENT
ALL WEATHER WOOD
CORRUGATED METAL PIPE
CORRUGATED STEEL PIPE
TOP OF CONCRETE
BRASS CAP MONUMENT AS NOTED
BENCH MARK
TEMPORARY BENCH MARK
TEST HOLE
SPOT ELEVATION
BLOCK NUMBER
LOT NUMBER
IRON PIPE SIZE (INDUSTRY STANDARD NOMINAL OUTSIDE PIPE DIAMETER)
GATE VALVE
VALVE BOX

RECORD DRAWING CERTIFICATE
THESE DRAWINGS REFLECT RECORDED INFORMATION OBTAINED DURING CONSTRUCTION. INFORMATION PROVIDED HEREIN IS ACCURATE TO THE BEST OF MY KNOWLEDGE.
NAME DATE

SCALE: AS NOTED
BAR IS ONE INCH ON ORIGINAL DRAWING 0 1"
IF NOT ONE INCH ON THIS SHEET, ADJUST SCALES ACCORDINGLY

CONSTRUCTION RECORD
FIELD BOOK
STAKING
FOREMAN
AS–BUILT
INSPECTOR

STATE OF ALASKA 49TH Lloyd A. Hansen No. CE 9692 REGISTERED PROFESSIONAL ENGINEER

WATER AND SEWER SYSTEM IMPROVEMENTS
GENERAL NOTES, LEGEND AND BASIS OF BEARING
CHEFORNAK, ALASKA

CE2 ENGINEERS, INC.
ANCHORAGE, ALASKA

REVISION	BY	DATE

Project No.
Date SEPT. 1997
Designed LAP
Drawn D–J.W.
Approved CLE

Sheet No. G–2
SHEET 3 OF 39

41.4 LF 4x12 ARCTIC WATERMAIN @ S 77°19'00" W. SEE PIPELINE SUPPORT DETAIL (A / C-6)

LOT 2

EXISTING WATER WELL AND RAW WATER PIPING

STA. 0+00
INSTALL ACCESS RAMP TRANSITION FROM THE EXISTING BOARDWALK AND START PIER SUPPORTED BOARDWALK, SEE SHEET S-1 FOR DETAILS

STA. 0+27.6, 8.0' LT.
INSTALL TWO 4" 90° BENDS

27.6'

22.9'

LOT 7

107.8 LF 4x12 ARCTIC WATERMAIN @ S 12°41'00" E

(A / C-6)

Tank

LOT 2

U. S. SURVEY NO. 4094

LOT 1

125 LF @ S 12°41'00" E

A STREET

STA. 1+07.4, 8.0' LT.
INSTALL TWO 4" 60° BENDS

STA. 3+25
INSTALL ACCESS RAMPS. SEE SHT. S-2

379.4 LF 4x12 ARCTIC WATERMAIN @ S 81°57'04" E

STA. 0+27.6, 58.9' RT.
PENETRATE WATER PLANT FLOOR, SEE SHT. M-4

BOARDWALK AND PIPELINE SUPPORT, TYP., SEE (A / C-6) (1 / C-6)

RETURN

SUPPLY

30.0' EASEMENT (15' EACH SIDE OF CENTERLINE) TYP.

STA. 5+20
MATCHPOINT

LOT 8

THIRD STREET

380.2 LF @ S 81°57'04" E

STA. 1+39.8
20° HORIZONTAL CHANGE IN DIRECTION

STA. 1+32.4
20° HORIZONTAL CHANGE IN DIRECTION

STA. 1+25
20° HORIZONTAL CHANGE IN DIRECTION

IC1035

80

DRAINAGE

LOT 1

FROZEN CONDITIONS — TRANSITION ZONE — UNFROZEN CONDITIONS

STA. 0+00 (GRADE BREAK)
CONNECT TO WATER PLANT

STA. 0+27.6, 58.9' RT.
PENETRATE WATER PLANT FLOOR

STA. 0+27.6, 8.0' LT
INSTALL TWO 90° BENDS

STA. 1+25
20° HORIZONTAL CHANGE IN DIRECTION

STA. 1+32.4
20° HORIZONTAL CHANGE IN DIRECTION

STA. 1+32.4, 8.0' LT.
INSTALL TWO 4" 60° BENDS

STA. 1+39.8
20° HORIZONTAL CHANGE IN DIRECTION

STA. 2+00
GRADE BREAK

STA. 3+25
ACCESS RAMPS

STA. 5+20 (GRADE BREAK)
MATCHPOINT

NEW BOARDWALK

EXISTING GRADE

FOR CONTINUATION SEE SHT. C-2

BOARDWALK TRANSITION RAMP

MATCH EXISTING BOARDWALK ELEVATION

ELEV. 79.0 (G.B.)

ELEV. 82.00 (G.B.)

HELICAL PIER SUPPORT AT 10' O.C., TYP. SEE (1 / C-6)

ELEV. 82.00 (G.B.)

85 80 75 70

0+00 0+20 0+40 0+60 0+80 1+00 1+20 1+40 1+60 1+80 2+00 2+20 2+40 2+60 2+80 3+00 3+20 3+40 3+60 3+80 4+00 4+20 4+40 4+60 4+80 5+00

RECORD DRAWING CERTIFICATE

THESE DRAWINGS REFLECT RECORDED INFORMATION OBTAINED DURING CONSTRUCTION. INFORMATION PROVIDED HEREIN IS ACCURATE TO THE BEST OF MY KNOWLEDGE.

NAME DATE

SCALE:
HORIZ.: 1"=20'
VERT.: 1"=5'

BAR IS ONE INCH ON ORIGINAL DRAWING
0 1"

IF NOT ONE INCH ON THIS SHEET, ADJUST SCALES ACCORDINGLY

CONSTRUCTION RECORD
FIELD BOOK
STAKING
FOREMAN
AS-BUILT
INSPECTOR

STATE OF ALASKA 49TH
Larry A. L. Freeman
NO. CE 6982
REGISTERED PROFESSIONAL ENGINEER

WATER AND SEWER SYSTEM IMPROVEMENTS

WATERMAIN PIPING AND BOARDWALK

CHEFORNAK, ALASKA

CE2 ENGINEERS, INC.

ANCHORAGE, ALASKA

REVISION	BY	DATE

Project No.
Date MAY 1998
Designed LAP
Drawn D-J.W.
Approved CLE

Sheet No. C-1

SHEET 4 OF 39

U. S. SURVEY NO. 4094

U. S. SURVEY NO. 4421

TRACT A

101035

HV 79.5

DRAINAGE

STA. 5+20
MATCHPOINT.
SEE SHT. C-1

30.0' EASEMENT
(15' EACH SIDE OF CENTERLINE)
TYP.

339.3 LF 4x12 ARCTIC
WATERMAIN @ S 81°57'04" E

BOARDWALK AND PIPELINE
SUPPORT, TYP., SEE A/C-6

RETURN

SUPPLY

N 77°19'00" E

STA. 8+58.1, 8.0' LT.
INSTALL TWO 4" 11 1/4°
BENDS

STA. 9+44.9, 8.0' LT.
(= STA. 10+00, SHT. C-3)
INSTALL TWO 4" 90° BENDS

STA. 9+43.3
56° HORIZONTAL CHANGE IN
DIRECTION

STA. 9+43.3, 8.0' LT.
INSTALL TWO 4" 45° BENDS

338.1 LF @ S 81°57'04" E

85.2 LF @ S 68°06'31" E

STA. 8+58.1
11 1/4° HORIZONTAL CHANGE
IN DIRECTION

PROPOSED UTILITY EXTENSION

91.3 LF 4x12 ARCTIC
WATERMAIN @ S 68°09'29" E

PROPOSED PROPERTY
BOUNDARY

FINISHED PAD
ELEVATION 87.0

5.1 LF 4x12 ARCTIC
WATERMAIN @ S 12°41'00" E

16.0 LF @ S 12°41'00" E

FUTURE
CONSTRUCTION

FIRST STREET

EDGE OF RIGHT OF
WAY, TYP.

U. S. SURVEY
NO. 4421
TRACT A

W.S.=78.1

STA. 9+59.3
END PIER SUPPORTED
BOARDWALK W/
10'x16' TURN

PORTION OF:
U. S. SURVEY
NO. 4421
TRACT A

UNFROZEN CONDITIONS | TRANSITION ZONE | FROZEN CONDITIONS

STA. 5+20 (GRADE BREAK)
MATCHPOINT

STA. 6+80
GRADE BREAK

NEW BOARDWALK

STA. 8+58.1
11 1/4° HORIZONTAL
CHANGE IN DIRECTION

STA. 8+58.1, 8.0' LT.
INSTALL TWO 4" 11 1/4°
BENDS

STA. 9+43.3, 8.0' LT.
INSTALL TWO 4" 11 1/4°
BENDS

STA. 9+43.3
56° HORIZONTAL
CHANGE IN DIRECTION

STA. 9+59.3
END BOARDWALK

FOR CONTINUATION
SEE SHT. C-1

EXISTING GRADE

BOARDWALK AND PIPING SUPPORT
AT 10' O.C.

ELEV. 82.00 (G.B.)

ELEV. 82.5 (G.B.)

ELEV. 85.28

ELEV. 86.73

ELEV. 87.0

85 | 80 | 75 | 70

5+00 | 5+20 | 5+40 | 5+60 | 5+80 | 6+00 | 6+20 | 6+40 | 6+60 | 6+80 | 7+00 | 7+20 | 7+40 | 7+60 | 7+80 | 8+00 | 8+20 | 8+40 | 8+60 | 8+80 | 9+00 | 9+20 | 9+40 | 9+60 | 9+80

RECORD DRAWING CERTIFICATE

THESE DRAWINGS REFLECT RECORDED INFORMATION OBTAINED DURING CONSTRUCTION. INFORMATION PROVIDED HEREIN IS ACCURATE TO THE BEST OF MY KNOWLEDGE.

NAME | DATE

SCALE:
HORIZ.: 1"=20'
VERT.: 1"=5'

BAR IS ONE INCH ON ORIGINAL DRAWING
0 1"

IF NOT ONE INCH ON THIS SHEET, ADJUST SCALES ACCORDINGLY

CONSTRUCTION RECORD

FIELD BOOK	
STAKING	
FOREMAN	
AS-BUILT	
INSPECTOR	

STATE OF ALASKA 49TH
Lloyd A. Parsons
NO. CE 9892
REGISTERED PROFESSIONAL ENGINEER

WATER AND SEWER SYSTEM IMPROVEMENTS

WATERMAIN PIPING AND BOARDWALK

CHEFORNAK, ALASKA

CE2 ENGINEERS, INC.

ANCHORAGE, ALASKA

REVISION	BY	DATE

Project No.
Date MAY 1998
Designed LAP
Drawn D-J.W.
Approved CLE

Sheet No. C-2

SHEET 5 OF 39

U. S. SURVEY
NO. 4421

TRACT A

101035

EDGE OF RIGHT OF WAY, TYP.

FIRST STREET

N 77°19'00" E

PIPELINE SUPPORT (TYP.), SEE B/C-6

STA. 10+00
(= STA. 9+44.9, 8.0' LT., SHT. C-1) MATCHPOINT, SEE SHT. C-1

STA. 11+10
INSTALL TWO 4" 45° BEND

RETURN

385 LF 4x12 ARCTIC WATERMAIN (SUPPLY & RETURN) @ N 77°19'00" E

SUPPLY

PIPELINE SUPPORT (TYP.), SEE B/C-6

50 LF 4x12 ARCTIC WATERMAIN (SUPPLY & RETURN) @ N 77°19'00" E

STA. 11+00
GRADE BREAK

60 LF 4x12 ARCTIC WATERMAIN @ N 26°18'06" E

STA. 10+50
INSTALL TWO 4" HORIZONTAL 45° BEND

FUTURE CONNECTION TO FUTURE WATER TREATMENT PLANT, TYP.

FUTURE WATER TREATMENT PLANT, SEE SHEET C-11 FOR SITE WORK

STA. 14+95
MATCHPOINT (SEE SHT. C-4)
INSTALL TWO 4" 105° BEND

80

82

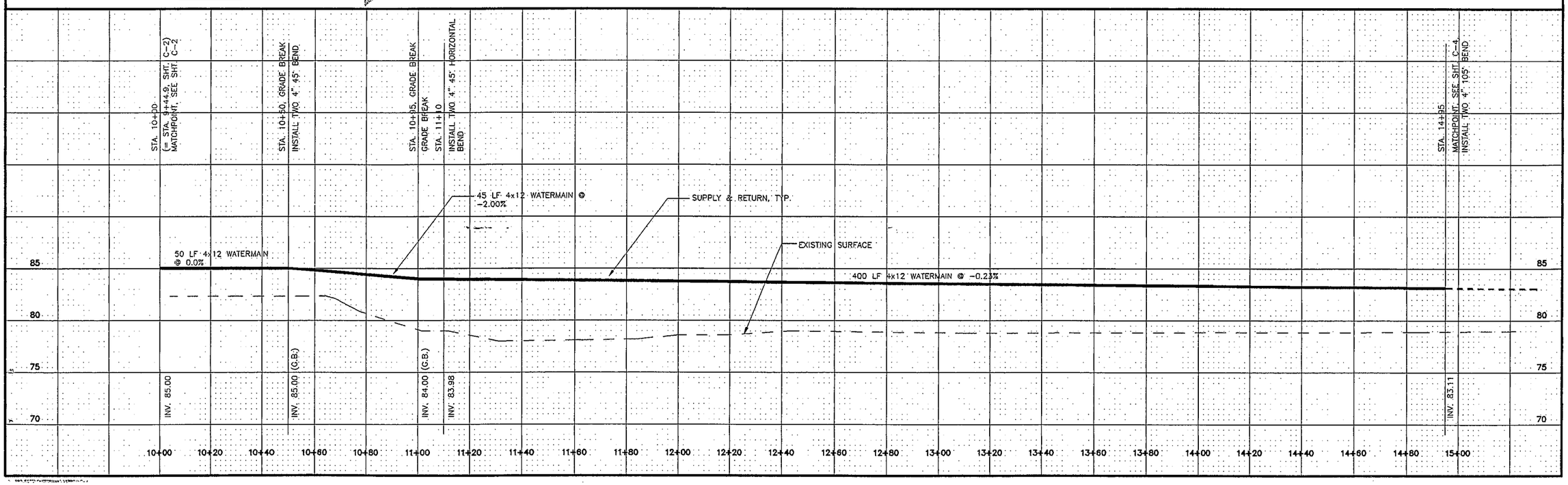

RECORD DRAWING CERTIFICATE

THESE DRAWINGS REFLECT RECORDED INFORMATION OBTAINED DURING CONSTRUCTION. INFORMATION PROVIDED HEREIN IS ACCURATE TO THE BEST OF MY KNOWLEDGE.

NAME DATE

SCALE:
HORIZ.: 1"=20'
VERT.: 1"=5'

BAR IS ONE INCH ON ORIGINAL DRAWING
0 1"
IF NOT ONE INCH, ON THIS SHEET, ADJUST SCALES ACCORDINGLY

CONSTRUCTION RECORD
FIELD BOOK
STAKING
FOREMAN
AS-BUILT
INSPECTOR

STATE OF ALASKA 49TH
Lloyd A. Bergman
NO. CE 9632
REGISTERED PROFESSIONAL ENGINEER

WATER AND SEWER SYSTEM IMPROVEMENTS

WELL FIELD PIPING

CHEFORNAK, ALASKA

CE2 ENGINEERS, INC.
ANCHORAGE, ALASKA

REVISION	BY	DATE

Project No.
Date MAY 1998
Designed LAP
Drawn D-J.W.
Approved CLE

Sheet No. C-3
SHEET 6 OF 39

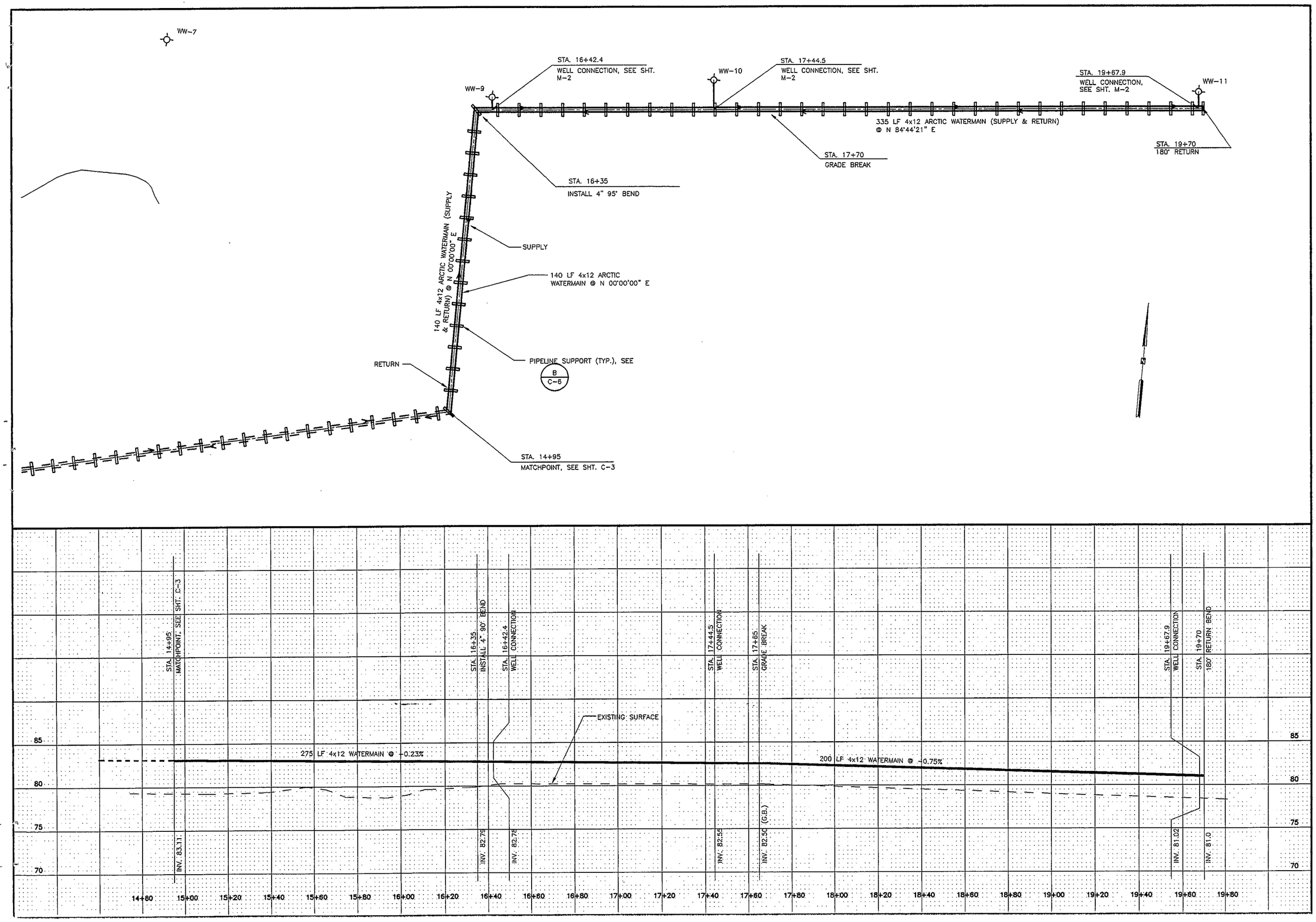

RECORD DRAWING CERTIFICATE

THESE DRAWINGS REFLECT RECORDED INFORMATION OBTAINED DURING CONSTRUCTION. INFORMATION PROVIDED HEREIN IS ACCURATE TO THE BEST OF MY KNOWLEDGE.

NAME: DATE

SCALE:
HORIZ.: 1"=20'
VERT.: 1"=5'

BAR IS ONE INCH ON ORIGINAL DRAWING
0 1"
IF NOT ONE INCH, ON THIS SHEET, ADJUST SCALES ACCORDINGLY

CONSTRUCTION RECORD
FIELD BOOK
STAKING
FOREMAN
AS-BUILT
INSPECTOR

STATE OF ALASKA 49TH
Larry A. Pederson
NO. CE 9992
REGISTERED PROFESSIONAL ENGINEER

WATER AND SEWER SYSTEM IMPROVEMENTS

WELL FIELD PIPING

CHEFORNAK, ALASKA

CE2 ENGINEERS, INC.
ANCHORAGE, ALASKA

REVISION	BY	DATE

Project No.
Date MAY 1998
Designed LAP
Drawn D-J.W.
Approved CLE

Sheet No. C-4

SHEET 7 OF 39

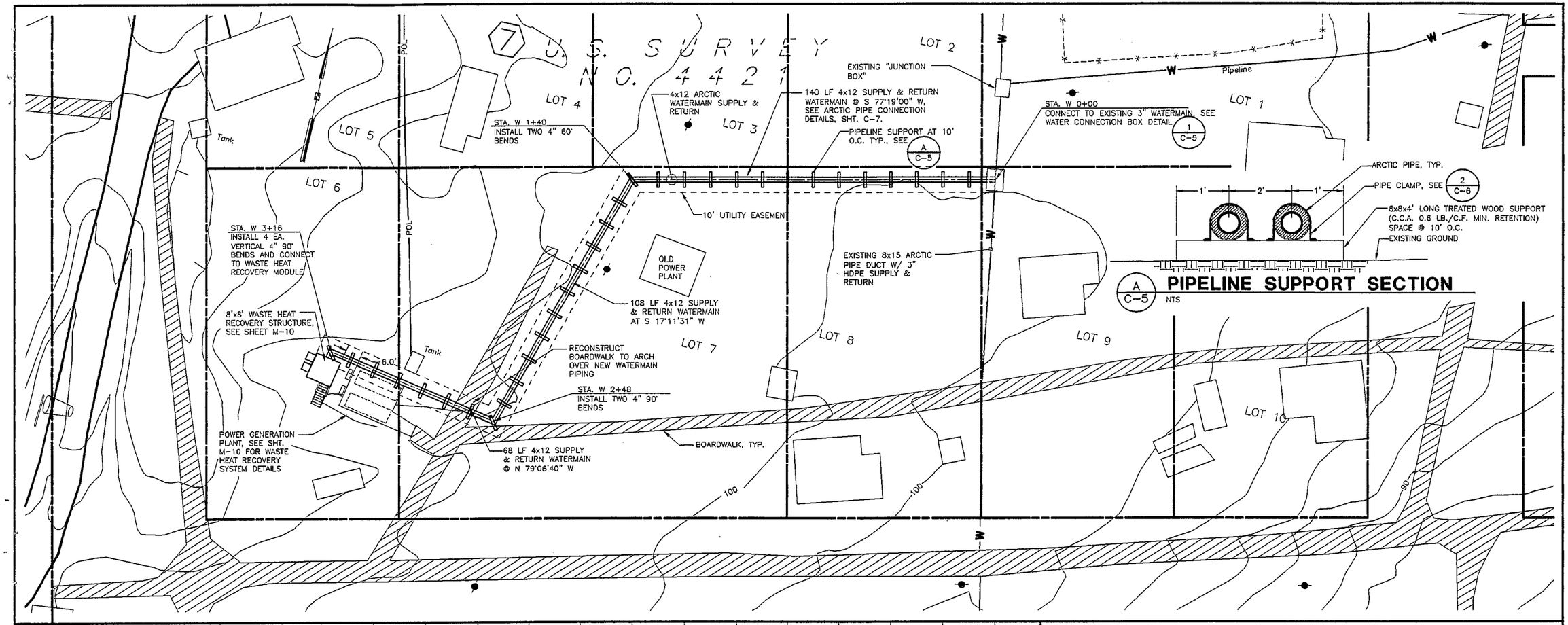

A C-5 **PIPELINE SUPPORT SECTION**
NTS

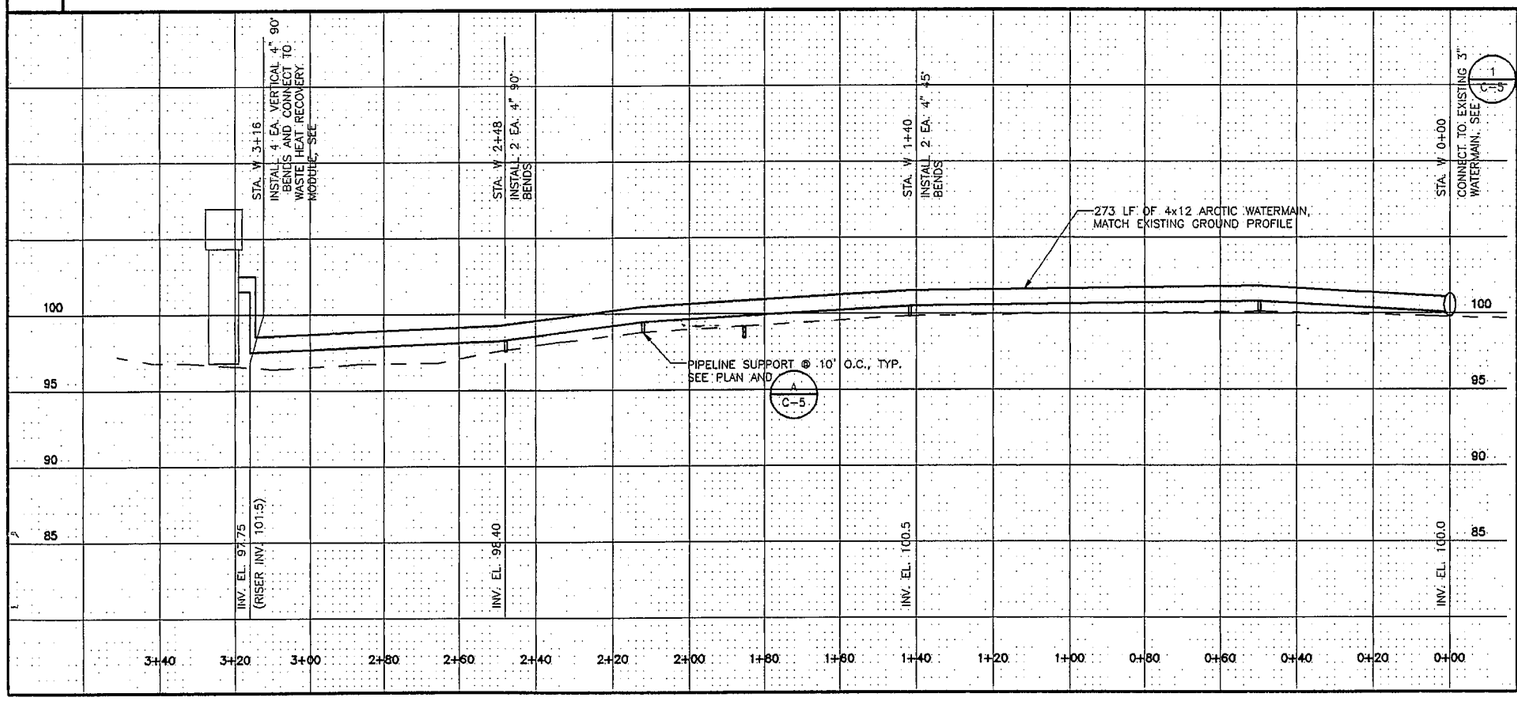

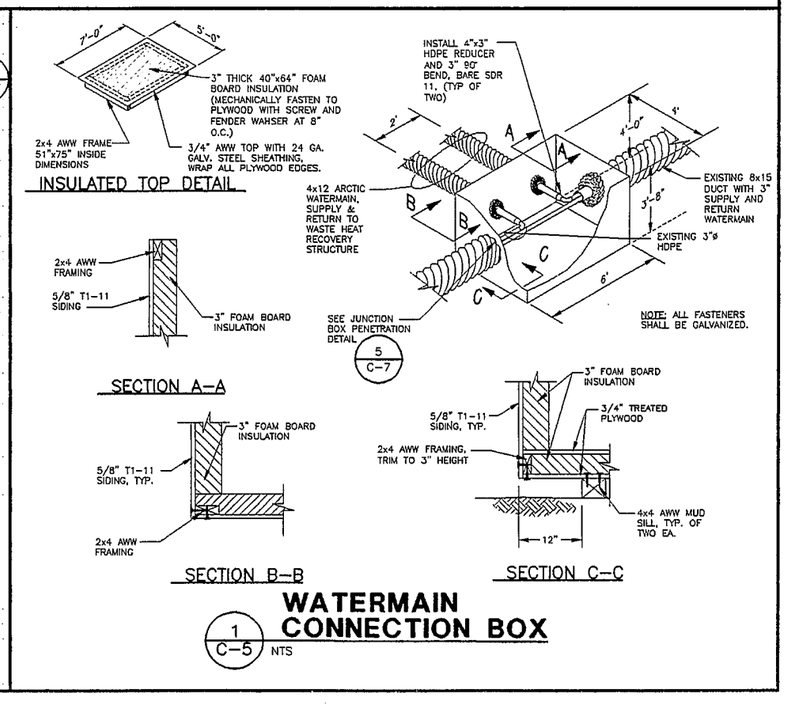

1 C-5 **WATERMAIN CONNECTION BOX**
NTS

RECORD DRAWING CERTIFICATE
THESE DRAWINGS REFLECT RECORDED INFORMATION OBTAINED DURING CONSTRUCTION. INFORMATION PROVIDED HEREIN IS ACCURATE TO THE BEST OF MY KNOWLEDGE.
NAME DATE

SCALE:
HORIZ.: 1"=20'
VERT.: 1"=5'
BAR OF 1" WILL BE ON ORIGINAL DRAWING
0 1"
IF NOT ONE INCH ON THIS SHEET, ADJUST SCALES ACCORDINGLY

CONSTRUCTION RECORD
FIELD BOOK
STAKING
FOREMAN
AS-BUILT
INSPECTOR

STATE OF ALASKA 49TH
Lloyd A. Peterson
ASSOCIATE CIVIL ENGINEER
NO. CE 8692
REGISTERED PROFESSIONAL ENGINEER

WATER AND SEWER SYSTEM IMPROVEMENTS
WASTE HEAT RECOVERY WATERMAIN EXTENSION
CHEFORNAK, ALASKA

CE2 ENGINEERS, INC.
ANCHORAGE, ALASKA

REVISION	BY	DATE

Project No. ___ Date MAY 1998
Designed LAP
Drawn D-J.W.
Approved CLE

Sheet No. C-5
SHEET 8 OF 39

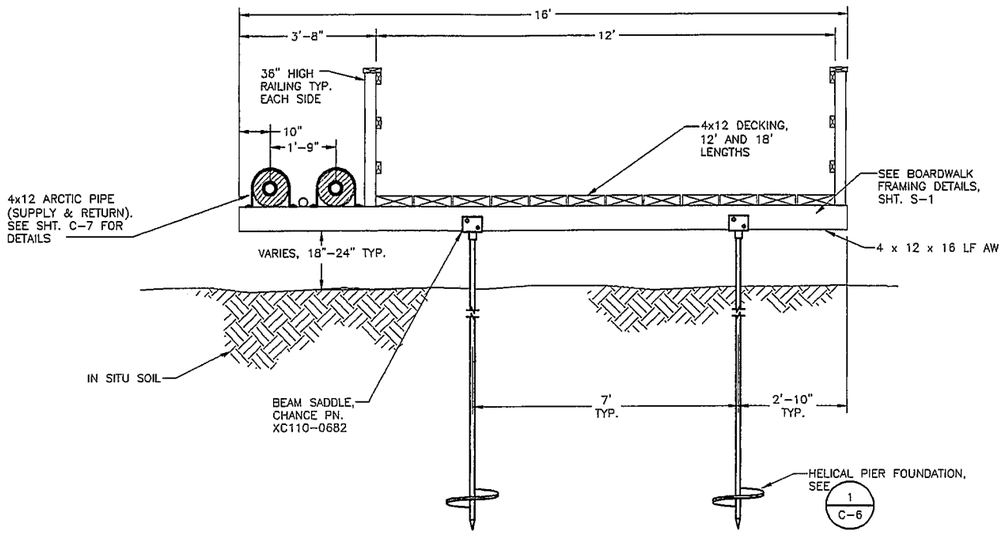

A/C-6 TYPICAL BOARDWALK SECTION

SCALE: 1/2" = 1'-0"

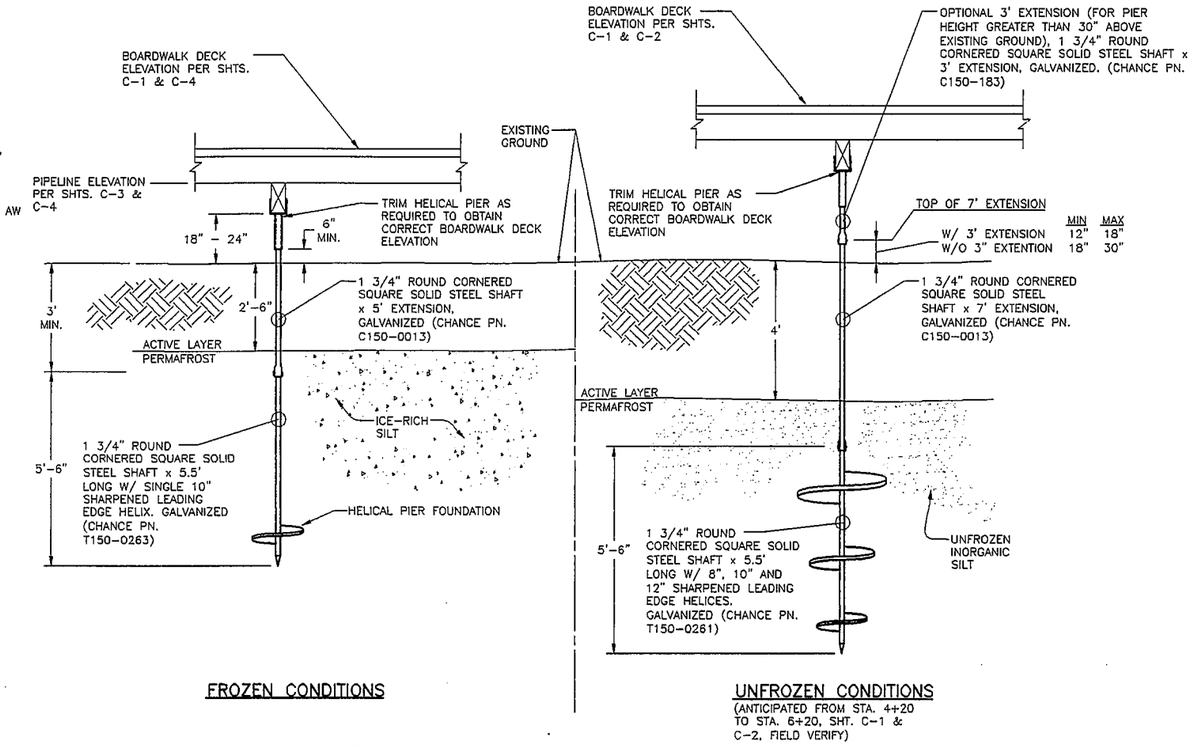

1/C-6 HELICAL PIER FOUNDATION DETAIL

NTS

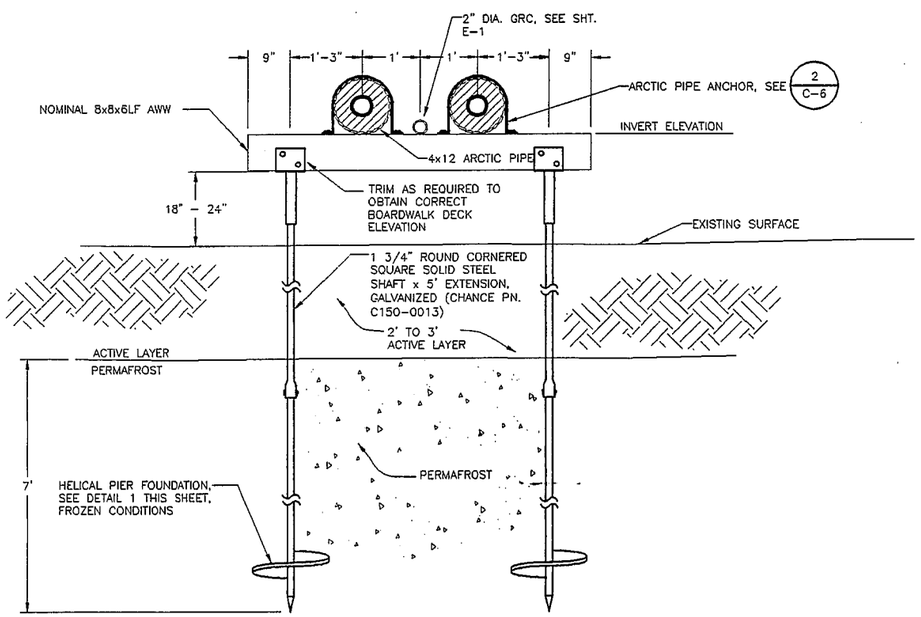

B/C-6 WELL WATER PIPELINE SUPPORT DETAIL

SCALE: 3/4" = 1'-0"

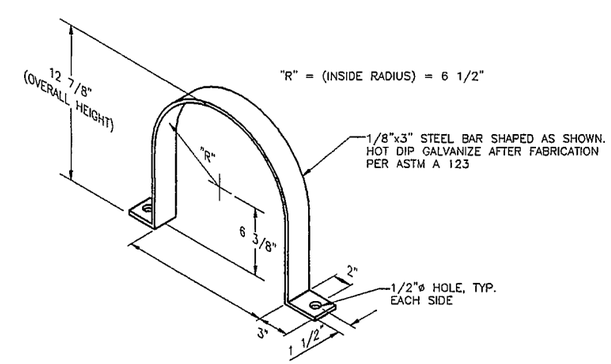

2/C-6 ARCTIC PIPE CLAMP DETAIL

NTS

RECORD DRAWING CERTIFICATE

THESE DRAWINGS REFLECT RECORDED INFORMATION OBTAINED DURING CONSTRUCTION. INFORMATION PROVIDED HEREIN IS ACCURATE TO THE BEST OF MY KNOWLEDGE.

NAME DATE

SCALE: AS SHOWN

BAR IS ONE INCH ON ORIGINAL DRAWING 0 1"

IF NOT ONE INCH ON THIS SHEET, ADJUST SCALE ACCORDINGLY

CONSTRUCTION RECORD

FIELD BOOK

STAKING

FOREMAN

AS-BUILT

INSPECTOR

STATE OF ALASKA 49TH Lloyd A. Parkson NO. CE 9892 REGISTERED PROFESSIONAL ENGINEER

WATER AND SEWER SYSTEM IMPROVEMENTS

BOARDWALK AND PIPELINE SUPPORT DETAILS

CHEFORNAK, ALASKA

CE2 ENGINEERS, INC.

ANCHORAGE, ALASKA

REVISION	BY	DATE

Project No.

Date MAY 1998

Designed LAP

Drawn D-J.W.

Approved CLE

Sheet No.

C-6

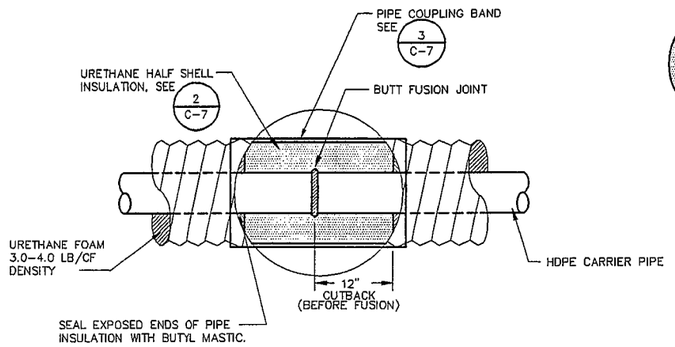

1 / C-7 BUTT FUSED PIPE JOINT DETAIL

NTS

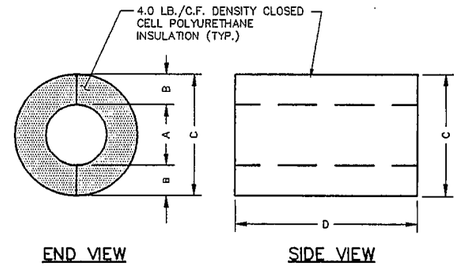

HALF SHELL	A	B	C	D
4"	4 5/8"	3 11/16"	12 3/4"	23"
6"	6 3/4"	3 1/16"	12 3/4"	23"
8"	8 3/4"	3 1/8"	15 7/8"	23"

2 / C-7 INSULATION HALF SHELL DETAIL

NTS

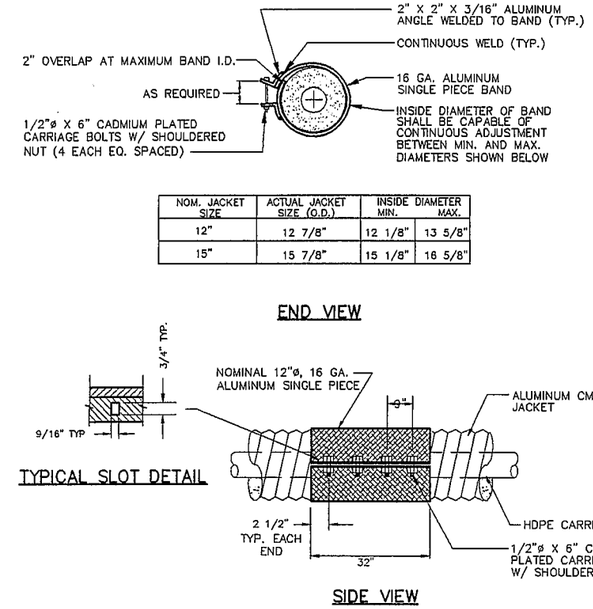

NOM. JACKET SIZE	ACTUAL JACKET SIZE (O.D.)	INSIDE DIAMETER MIN.	MAX.
12"	12 7/8"	12 1/8"	13 5/8"
15"	15 7/8"	15 1/8"	16 5/8"

3 / C-7 JOINT PIPE COUPLING BAND DETAIL

NTS

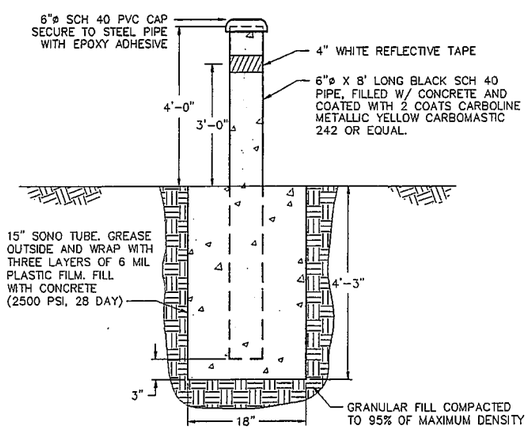

4 / C-7 BOLLARD DETAIL

NTS

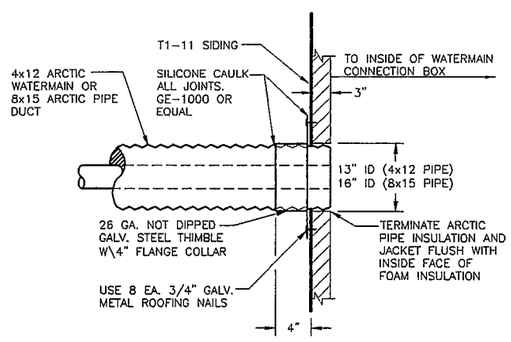

5 / C-7 PENETRATION DETAIL

NTS

RECORD DRAWING CERTIFICATE

THESE DRAWINGS REFLECT RECORDED INFORMATION OBTAINED DURING CONSTRUCTION. INFORMATION PROVIDED HEREIN IS ACCURATE TO THE BEST OF MY KNOWLEDGE.

NAME DATE

SCALE: AS SHOWN

BAR IS ONE INCH ON ORIGINAL DRAWING 0 1"

IF NOT ONE INCH ON THIS SHEET ADJUST SCALES ACCORDINGLY

CONSTRUCTION RECORD

FIELD BOOK

STAKING

FOREMAN

AS-BUILT

INSPECTOR

STATE OF ALASKA 49TH REGISTERED PROFESSIONAL ENGINEER Lloyd A. Persson No. CE 8882

WATER AND SEWER SYSTEM IMPROVEMENTS

ARCTIC PIPING DETAILS

CHEFORNAK, ALASKA

CE2 ENGINEERS, INC.

ANCHORAGE, ALASKA

REVISION	BY	DATE

Project No. ____

Date FEB., 1998

Designed LAP

Drawn D-J.W.

Approved CLE

Sheet No. C-7

SHEET 10 OF 39

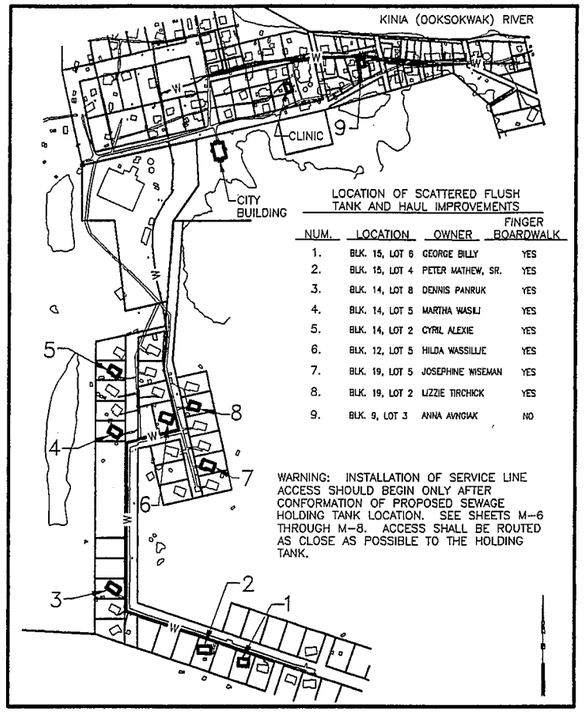

LOCATION OF SCATTERED FLUSH TANK AND HAUL IMPROVEMENTS

NUM.	LOCATION	OWNER	FINGER BOARDWALK
1.	BLK. 15, LOT 6	GEORGE BILLY	YES
2.	BLK. 15, LOT 4	PETER MATHEW, SR.	YES
3.	BLK. 14, LOT 8	DENNIS PANRUK	YES
4.	BLK. 14, LOT 5	MARTHA WASILI	YES
5.	BLK. 14, LOT 2	CYRIL ALEXIE	YES
6.	BLK. 12, LOT 5	HILDA WASSILUE	YES
7.	BLK. 19, LOT 5	JOSEPHINE WISEMAN	YES
8.	BLK. 19, LOT 2	LIZZIE TIRCHICK	YES
9.	BLK. 9, LOT 3	ANNA AWNGIAK	NO

WARNING: INSTALLATION OF SERVICE LINE ACCESS SHOULD BEGIN ONLY AFTER CONFORMATION OF PROPOSED SEWAGE HOLDING TANK LOCATION. SEE SHEETS M-6 THROUGH M-8. ACCESS SHALL BE ROUTED AS CLOSE AS POSSIBLE TO THE HOLDING TANK.

KEY MAP

SCALE: 1" = 300'

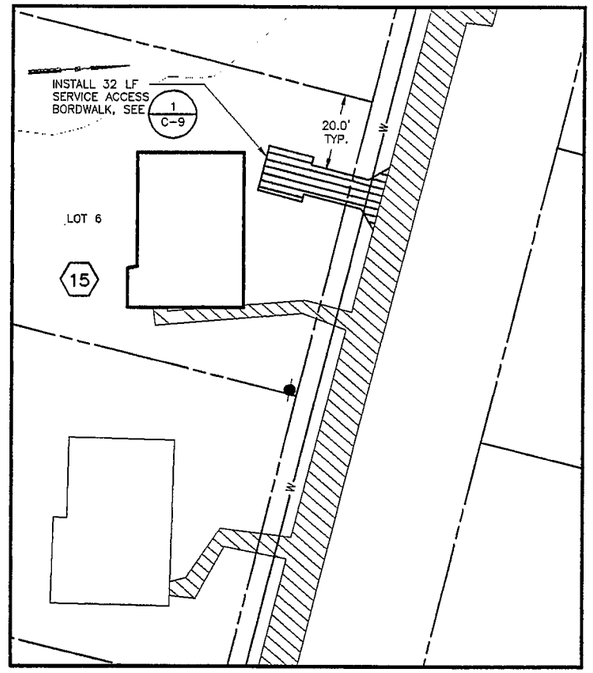

HOME NO. 1: GEORGE BILLY - BLOCK 15, LOT 6

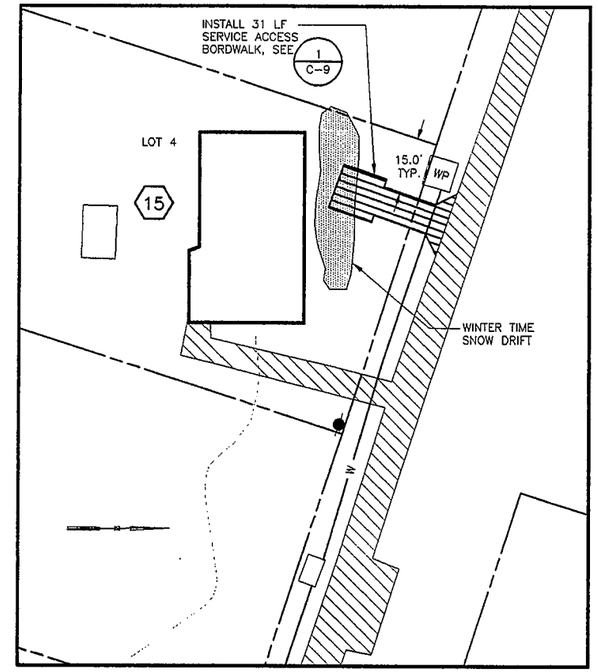

HOME NO. 2: PETER MATHEW, SR. - BLOCK 15, LOT 4

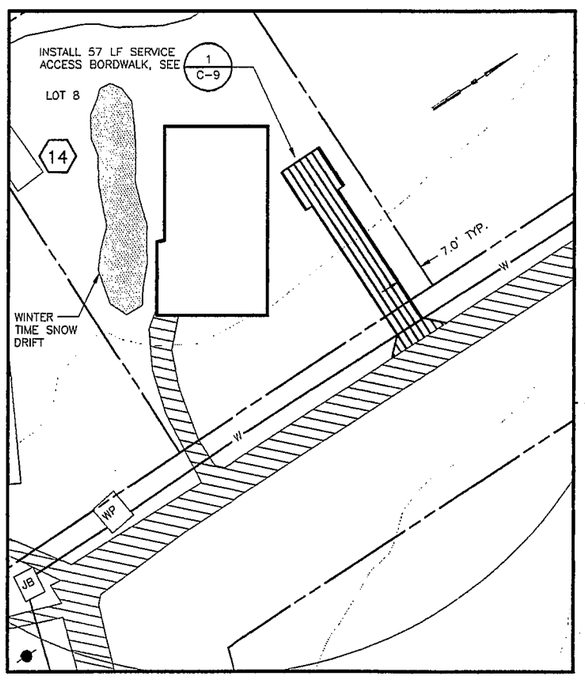

HOME NO. 3: DENNIS PANRUK - BLOCK 14, LOT 8

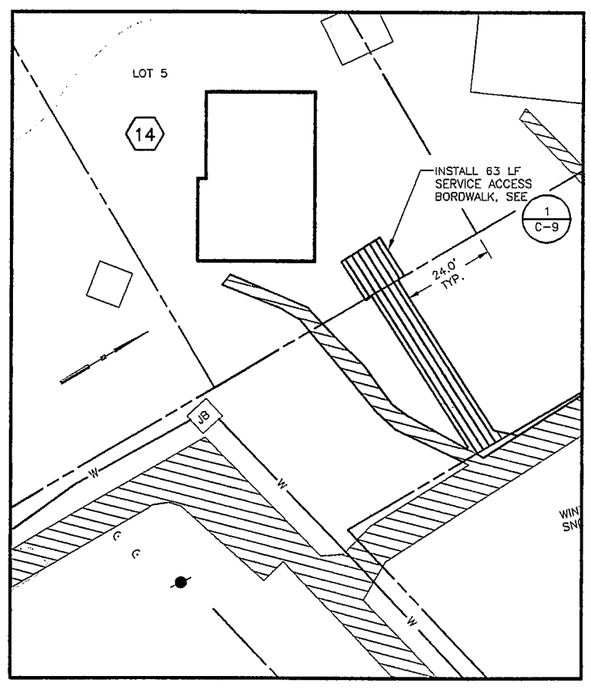

HOME NO. 4: MARTHA WASILI - BLOCK 14, LOT 5

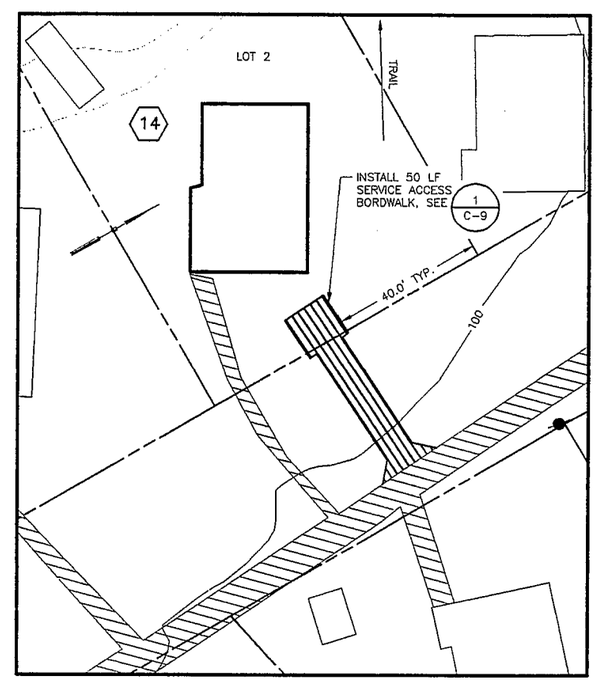

HOME NO. 5: CYRIL ALEXIE - BLOCK 14, LOT 2

RECORD DRAWING CERTIFICATE

THESE DRAWINGS REFLECT RECORDED INFORMATION OBTAINED DURING CONSTRUCTION. INFORMATION PROVIDED HEREIN IS ACCURATE TO THE BEST OF MY KNOWLEDGE.

NAME DATE

SCALE: 1" = 20'

BAR IS ONE INCH ON ORIGINAL DRAWING. 0 1"

IF NOT ONE INCH ON THIS SHEET, ADJUST SCALES ACCORDINGLY

CONSTRUCTION RECORD

FIELD BOOK

STAKING

FOREMAN

AS-BUILT

INSPECTOR

STATE OF ALASKA 49TH Larry A. Pearson NO. CE 8932 REGISTERED PROFESSIONAL ENGINEER

WATER AND SEWER SYSTEM IMPROVEMENTS

BOARDWALK SITE PLAN

CHEFORNAK, ALASKA

CE2 ENGINEERS, INC.

ANCHORAGE, ALASKA

REVISION	BY	DATE

Project No.

Date MAY 1998

Designed LAP

Drawn D-J.W.

Approved CLE

Sheet No. C-8

SHEET 11 OF 39

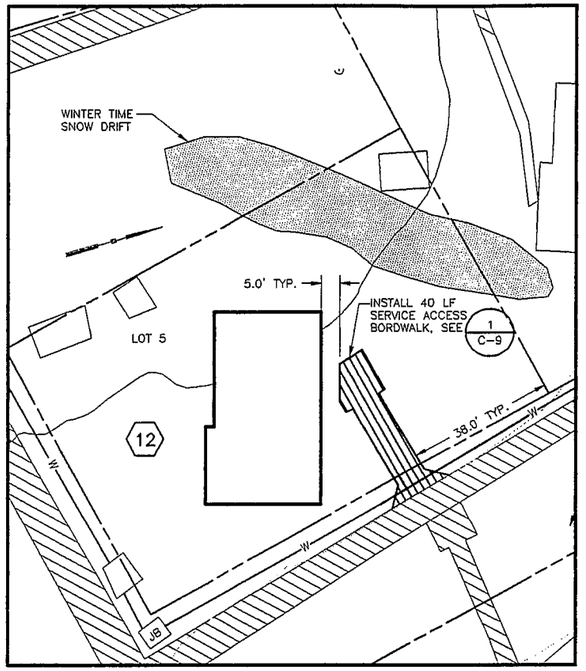

HOME NO. 6: HILDA WASSILLIE - BLOCK 12, LOT 5

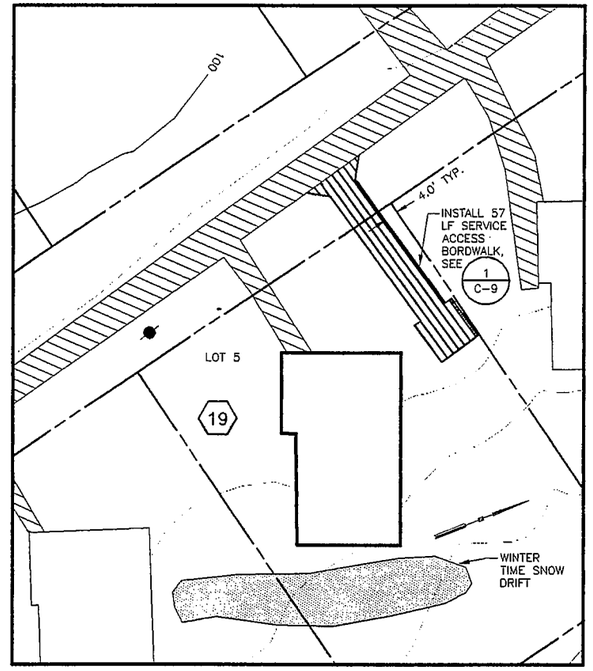

HOME NO. 7: JOSEPHINE WISEMAN - BLOCK 19, LOT 5

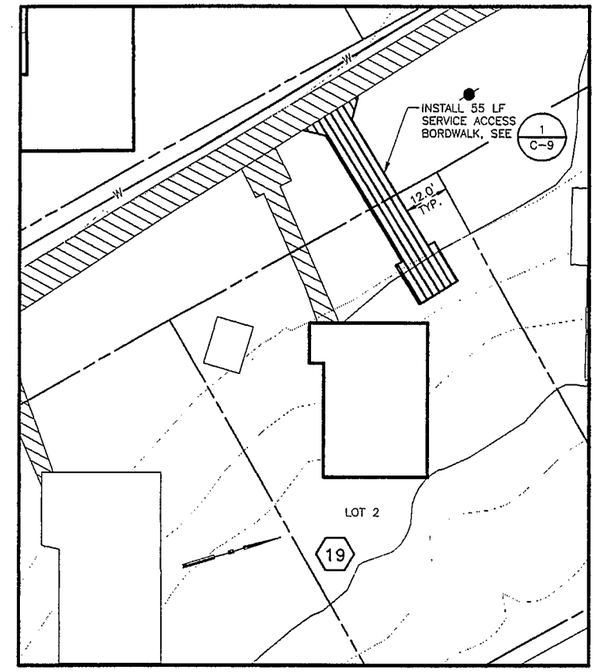

HOME NO. 8: LIZZIE TIRCHICK - BLOCK 19, LOT 2

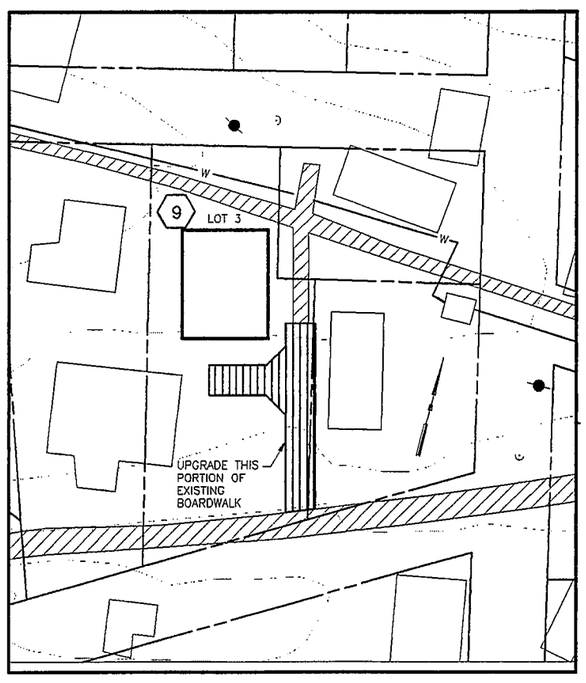

HOME NO. 9: ANNA AVNGIAK - BLOCK 9, LOT 3

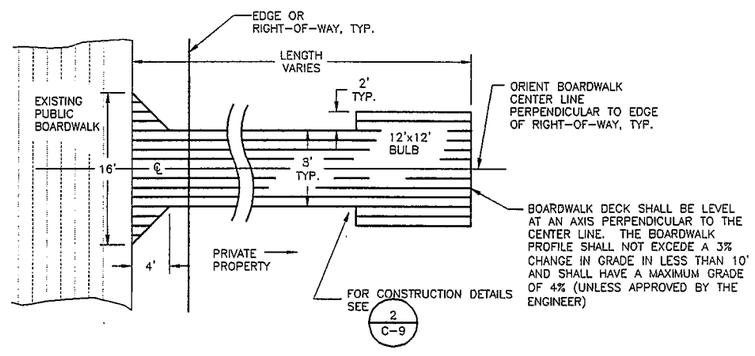

1/C-9 TYPICAL SCATTERED BOARDWALK EXTENSIONS
NTS

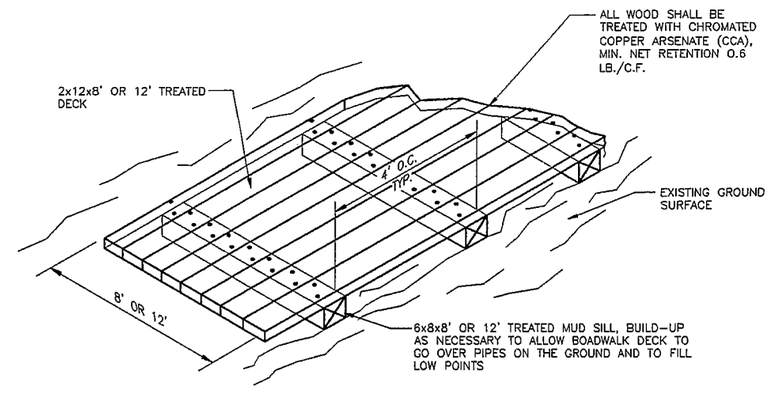

2/C-9 BOARDWALK CONSTRUCTION DETAIL
NTS

RECORD DRAWING CERTIFICATE
THESE DRAWINGS REFLECT RECORDED INFORMATION OBTAINED DURING CONSTRUCTION. INFORMATION PROVIDED HEREIN IS ACCURATE TO THE BEST OF MY KNOWLEDGE.
NAME DATE

SCALE: 1" = 20'
USE 1" ONE INCH ON ORIGINAL DRAWING
0 1"
IF NOT ONE INCH ON THIS SHEET, ADJUST SCALES ACCORDINGLY

CONSTRUCTION RECORD
FIELD BOOK
STAKING
FOREMAN
AS-BUILT
INSPECTOR

STATE OF ALASKA 49TH
Larry A. Peterson
LS CE 9892
REGISTERED PROFESSIONAL ENGINEER

WATER AND SEWER SYSTEM IMPROVEMENTS
BOARDWALK SITE PLAN
CHEFORNAK, ALASKA

CE2 ENGINEERS, INC.
ANCHORAGE, ALASKA

REVISION	BY	DATE

Project No.
Date MAY 1998
Designed LAP
Drawn D-J.W.
Approved CLE

Sheet No. C-9
SHEET 12 OF 39

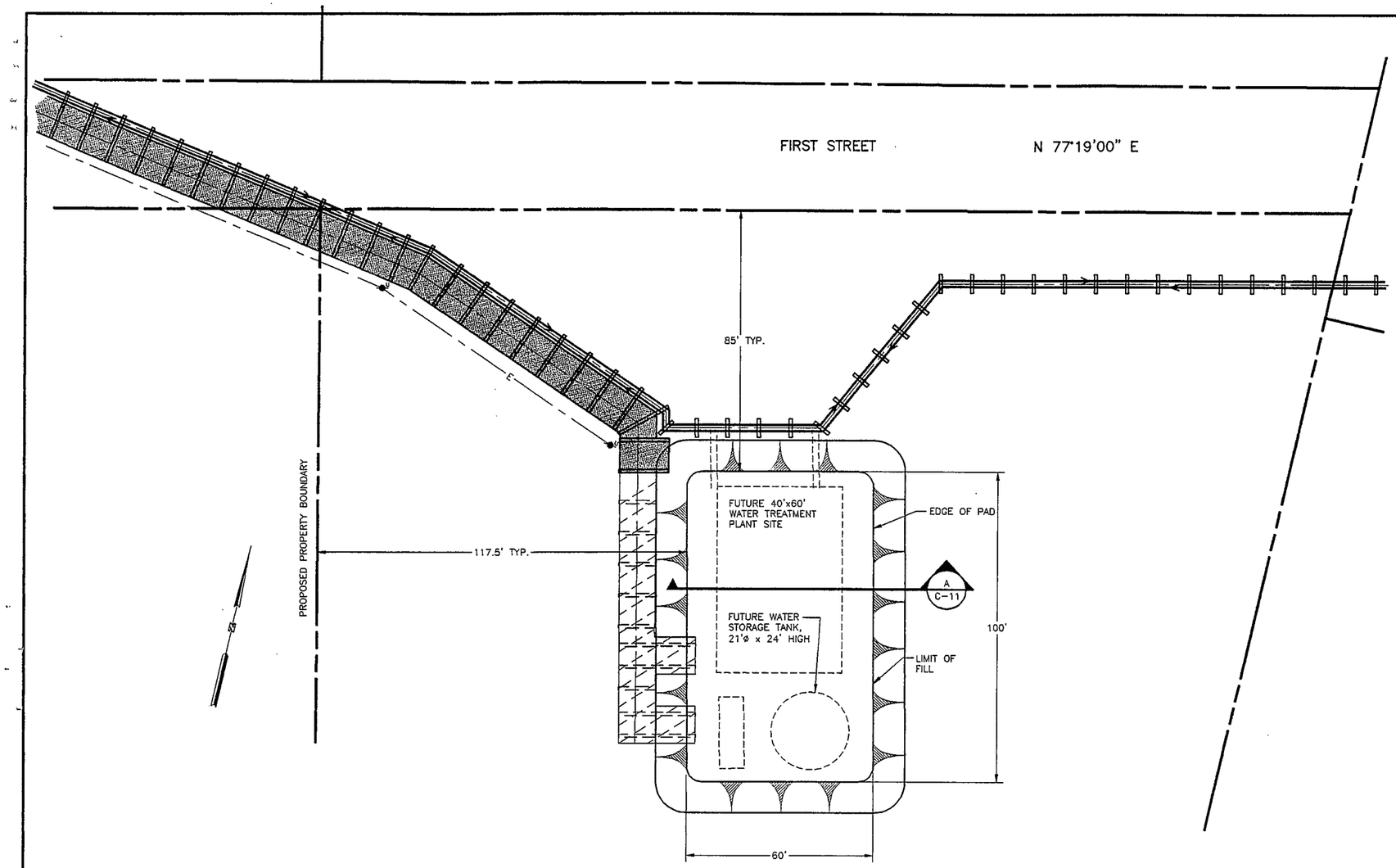

GENERAL NOTES

1. REMOVE ALL ORGANIC OVERBURDEN AND THAWED SATURATED MATERIAL (UNSTABLE SILTS, ETC.) FROM AREAS DESIGNATED TO RECEIVE FILLS.
2. PLACE FILTER FABRIC (AMOCO 2002 OR EQUAL) ON THE SURFACE OF THE UNDERLYING FROZEN INORGANIC SILTS.
3. FILL PAD GRAVEL COMPACTED IN ONE FOOT LIFTS TO 95% MAXIMUM DENSITY.
4. BLEND EDGES OF YARD FILL TO MATCH THE EXISTING CONTOURS.
5. SEE SHEET S-3 FOR FOUNDATION DETAILS AND SHEET C-3 AND C-4 FOR BOARDWALK AND PIPELINE DETAILS.

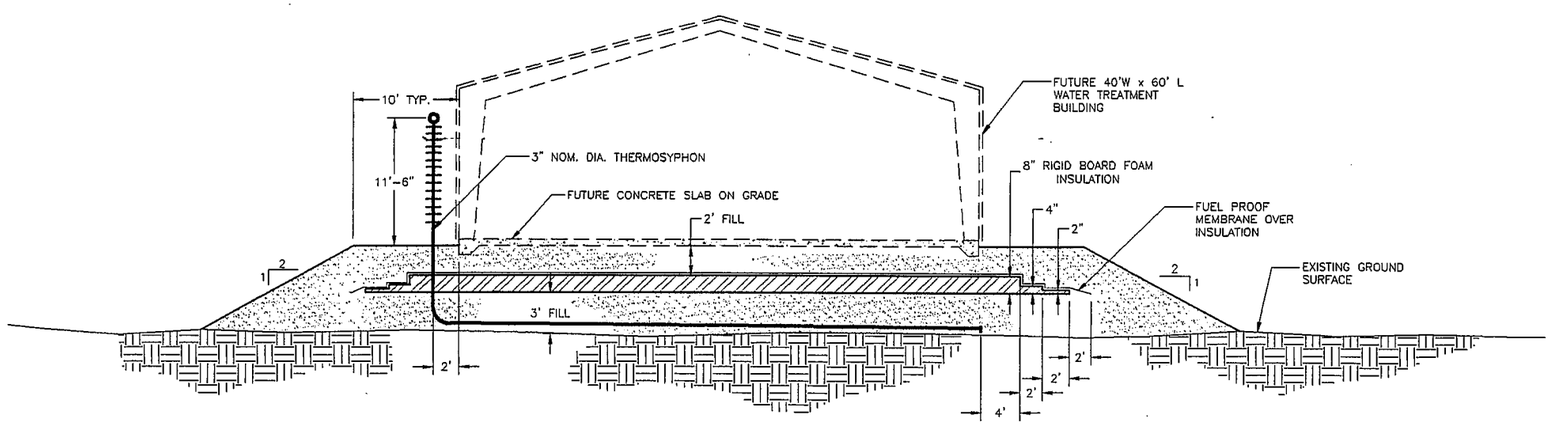

A C-11 **WATER TREATMENT PLANT PAD SECTION**
NTS

RECORD DRAWING CERTIFICATE
THESE DRAWINGS REFLECT RECORDED INFORMATION OBTAINED DURING CONSTRUCTION. INFORMATION PROVIDED HEREIN IS ACCURATE TO THE BEST OF MY KNOWLEDGE.
NAME DATE

SCALE: 1" = 20'
BAR IS ONE INCH ON ORIGINAL DRAWING
0 1"
IF NOT ONE INCH ON THIS SHEET, ADJUST SCALES ACCORDINGLY

CONSTRUCTION RECORD
FIELD BOOK
STAKING
FOREMAN
AS-BUILT
INSPECTOR

STATE OF ALASKA 4911 REGISTERED PROFESSIONAL ENGINEER
Lloyd A. Persson
NO. CE 9692

WATER AND SEWER SYSTEM IMPROVEMENTS
WATER TREATMENT PLANT SITE WORK
CHEFORNAK, ALASKA

CE2 ENGINEERS, INC.
ANCHORAGE, ALASKA

REVISION	BY	DATE

Project No.
Date FEB., 1998
Designed LAP
Drawn D-J.W.
Approved CLE

Sheet No. C-11

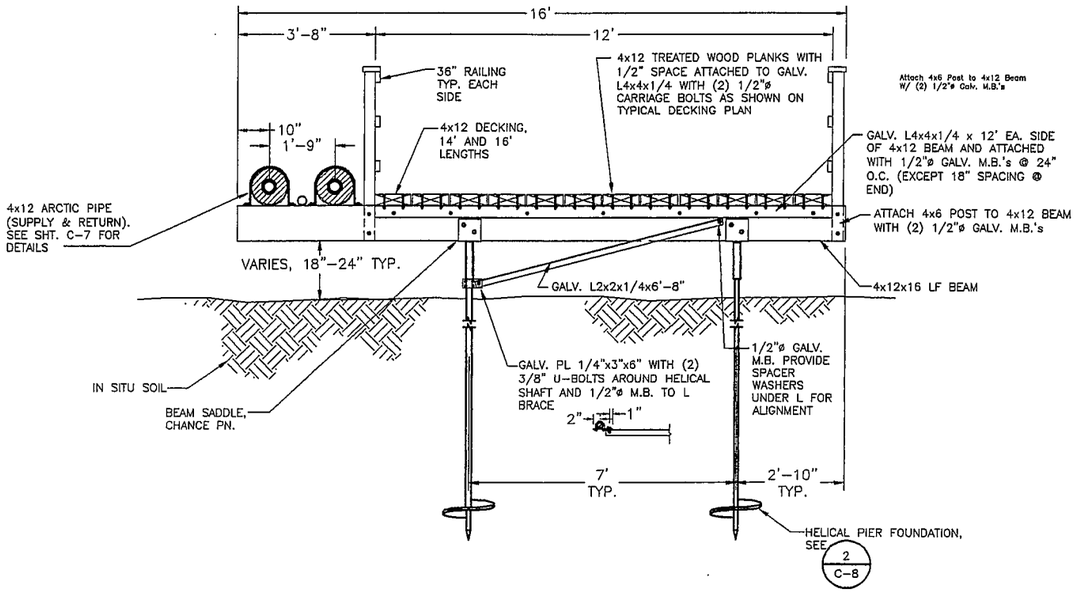

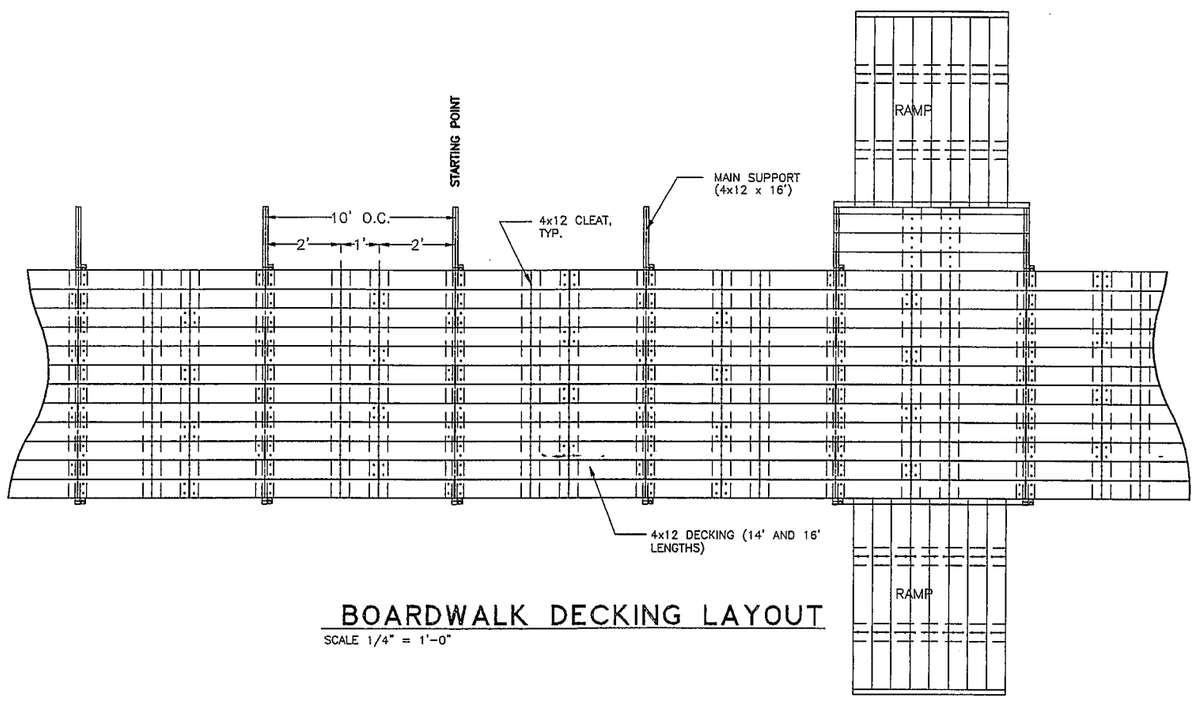

BOARDWALK DECKING LAYOUT

SCALE 1/4" = 1'-0"

STATE OF ALASKA 49TH Arthur H. Whitmer CE 3067 REGISTERED PROFESSIONAL ENGINEER

RECORD DRAWING CERTIFICATE

THESE DRAWINGS REFLECT RECORDED INFORMATION OBTAINED DURING CONSTRUCTION. INFORMATION PROVIDED HEREIN IS ACCURATE TO THE BEST OF MY KNOWLEDGE.

NAME DATE

SCALE: AS NOTED

BAR IS ONE INCH ON ORIGINAL DRAWING 0 1"

IF NOT ONE INCH ON THIS SHEET, ADJUST SCALES ACCORDINGLY

CONSTRUCTION RECORD

FIELD BOOK

STAKING

FOREMAN

AS-BUILT

INSPECTOR

STATE OF ALASKA 49TH CHARLES L. EDGENER NO. 4136-E REGISTERED PROFESSIONAL ENGINEER

WATER AND SEWER SYSTEM IMPROVEMENTS

BOARDWALK FRAMING DETAILS

CHEFORNAK, ALASKA

CE2 ENGINEERS, INC.

ANCHORAGE, ALASKA

REVISION	BY	DATE

Project No. ____ Date MAY 1998

Designed AHW

Drawn MC

Approved CLE

Sheet No. S-1

SHEET 16 OF 39

\PROJECTS\CHEFORNAK\98P02\S-1

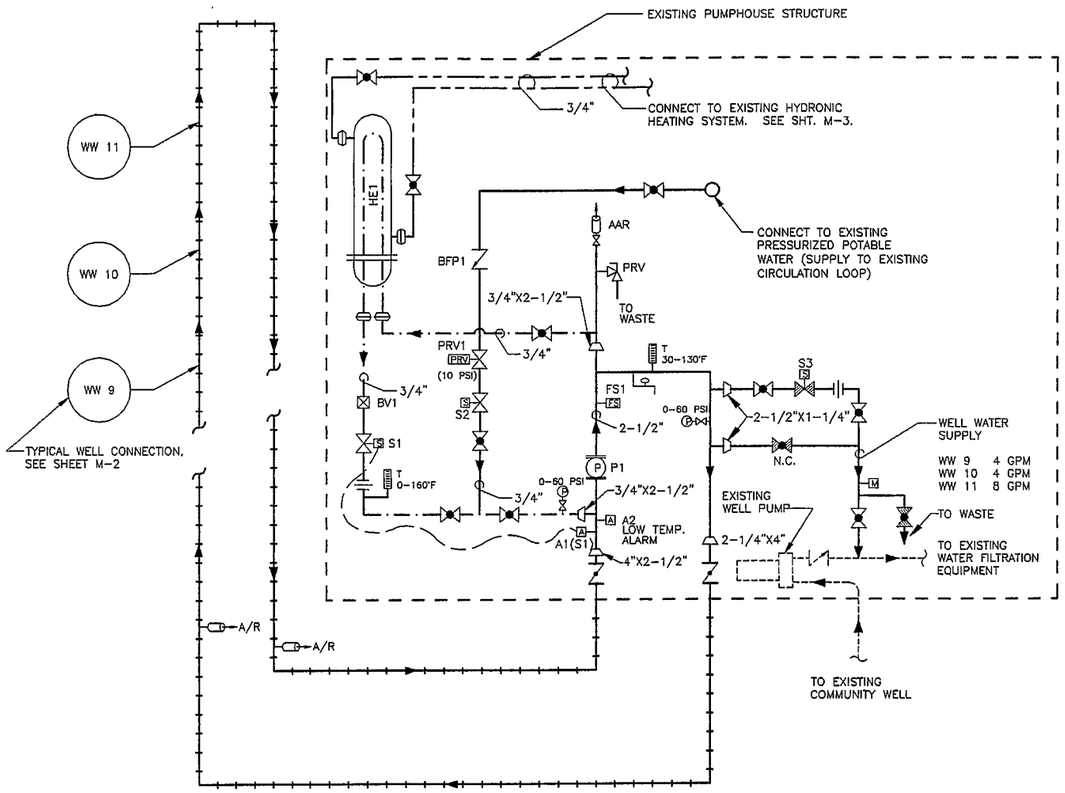

1 / M-1 WELL WATER CIRCULATION LOOP SCHEMATIC

NTS

EQUIPMENT LIST

	DESCRIPTION	MANUFACTURER
A1	AQUASTAT A1 CONTROLS THE OPEN/CLOSED POSITION OF HEAT ADD SOLENOID VALVE S1. SET POINT 45°F, 3°F DIFFERENTIAL. (NORMALLY OPEN CONTACTS BELOW SET POINT) SEE S1.	HONEYWELL T675A1565 WITH IMMERSION WELL 112630AA (INCLUDING 112720 CLIP). 3/4" NPT CONNECTION.
A2	ALARM AQUASTAT A2 MONITORS LOOP FOR LOW TEMPERATURE. SET POINT 37°F, 1°F DIFFERENTIAL. LOOP TEMPERATURE BELOW SET POINT AUDIBLE ALARM SHALL SOUND (CONTACTS CLOSE ON FALL OF LOOP TEMPERATURE).	HONEYWELL T675A1136 WITH IMMERSION WELL 112630 AA (INCLUDING 112720 CLIP). 3/4" NPT CONNECTION.
BV1	BALANCING VALVE BV1 SHALL REGULATE HEAT ADDITION "SLIP STREAM" FLOW RATE. SET POINT 7 GPM.	BELL & GOSSETT MOD. NO. CB-3/4, 3/4" NPT CONNECTIONS.
BFP1	BACKFLOW PREVENTER BFP1 ELIMINATES CONTAMINATION OF POTABLE WATER WITH UNTREATED WELL WATER.	WATTS SERIES 7, PART NO. 3/4"X3/4"-7-2-2. 3/4" FEMALE NPT CONNECTIONS.
HE1	HEAT ADD HEAT EXCHANGER HE1 MAINTAINS LOOP TEMPERATURE AT AQUASTAT A1 SET POINT.	TACO DOUBLE WALL SHELL & TUBE HEAT EXCHANGER, 110 MBH, TACO MOD NO. 604404-4LD. TUBE SIDE: POTABLE WATER, 7 GPM, 1 PSI DROP MAX, Tin=55°F, Tout=87°F. SHELL SIDE: PROPYLENE GLYCOL, 11 GPM, 1 PSI DROP MAX, Tin=180°F, Tout=157.4°F.
FS1	FLOW SWITCH FS1 MONITORS FOR LOW/NO LOOP FLOW. SET POINT 15 GPM. BELOW SET POINT AN ALARM WILL SOUND.	FLUID COMPONENTS INTL., MODEL 12-64-4 BASIC -00A1
P1	LOOP CIRCULATOR PUMP P1 SHALL MAINTAIN A MINIMUM 2 FT/SEC FLOW VELOCITY THROUGHOUT THE LOOP. 67 GPM @ 27' TDH.	GRUNDFOS MOD NO. UPS40-160 3/4 HP, 1ø, 230 VOLT, 1-1/2" FLANGED CONNECTIONS.
PRV1	PRESSURE REDUCING VALVE PRV1 SHALL MAINTAIN 10 PSI MINIMUM PRESSURE IN THE LOOP. SET POINT 10 PSI.	BELL & GOSSETT, MOD. NO. B7-12, 3/4" NPT CONNECTIONS.
S1	SOLENOID VALVE S1 SHALL OPEN ON A "CALL FOR HEAT" (LOOP LOW TEMP) FROM AQUASTAT A1.	ASCO RED-HAT, 3/4" NORMALLY OPEN, CAT# 8210G35
S2	SOLENOID VALVE S2 SHALL REMAIN CLOSED DURING WELL PUMP OPERATION.	ASCO RED-HAT, 3/4" NORMALLY OPEN, CAT# 8210G35
S3	SOLENOID VALVE S3 SHALL CLOSE 10 SECONDS AFTER ALL WELL PUMPS STOP OPERATION. NORMALLY CLOSED.	ASCO RED-HAT, 1-1/4" NORMALLY CLOSED, CAT# 8210B55
PRV	PRESSURE RELIEF VALVE. SET POINT 75 PSI.	BELL & GOSSETT, 75 PSI MOD. NO. 790-75, 3/4" NPT CONNECTIONS.

MECHANICAL LEGEND

- RW — RAW WATER
- CW — COLD WATER
- HW — HOT WATER
- M — METER
- BALL VALVE – NORMALLY
- N.C. — BALL VALVE – NORMALLY
- CHECK VALVE
- BUTTERFLY VALVE – NORMALLY CLOSED
- BUTTERFLY VALVE – NORMALLY CLOSED
- PRESSURE RELIEF VALVE
- A AB B — THERMOSTATIC CONTROL VALVE
- PRV — PRESSURE REDUCING VALVE
- S — SOLENOID VALVE – NORMALLY OPEN
- S N.C. — SOLENOID VALVE – NORMALLY CLOSED
- FLOW RESTRICTOR/ BALANCING VALVE
- AAR — AUTO AIR RELEASE
- A/R — AIR RELEASE (MANUAL)
- AX(SY) A — AQUASTAT AX (Sy), SOLENOID VALVE Sy CONTROLLED BY AQUASTAT AX
- FS — FLOW SWITCH
- T — THERMOMETER
- P — PRESSURE GAUGE
- HOSE BIB (WITH ATMOSPHERIC VACUUM BREAKER)
- UNION
- FLANGE BETWEEN HDPE PLASTIC AND COPPER
- P — PUMP
- CONSTANT FLOW ORIFICE VALVE
- REDUCER

LEGEND

- PROCESS PIPING (COPPER)
- WELL WATER PIPING (4X12 ARCTIC PIPE)
- BACKFLUSH/WASH PIPING (COPPER)
- GLYCOL HYDRONIC HEATING (COPPER)
- POTABLE WATER IN A HEAT ADDITION LOOP (COPPER)
- DIRECTION OF FLOW

GENERAL NOTES

1. ALL TANKS AND BOILERS SHALL BE FIRMLY ANCHORED TO FLOOR.
2. PIPING SHALL BE SUSPENDED FROM CLEVIS HANGERS OR SUPPORTED FROM FLOOR PER UPC. SWAY BRACE PIPING AS REQUIRED TO WITHSTAND SEISMIC ACTIVITY.
3. MATERIALS AND APPURTENANCES STANDARDS
   - A) COPPER TUBING SHALL BE TYPE L RIGID COPPER. FITTINGS SHALL BE IN COMPLIANCE WITH ANSI B16.18 AND B16.22.
   - B) SOLDER SHALL BE LEAD FREE 95-5 TIN-ANTIMONY, "BRIDGIT", OR EQUAL
   - C) BALL VALVES SHALL BE FULL PORT, TWO PIECE BODY, 600 PSI NON-SHOCK W.O.G., (NIBCO 585-70 OR EQUAL)
   - D) GATE VALVES SHALL BE BLOCK PATTERN, UNION BONNET, RISING STEM AND SOLID WEDGE RATED AT 300 PSI NON-SHOCK W.O.G., (NIBCO T/S/-134 OR EQUAL)
   - E) PRESSURE GAUGE SHALL HAVE A 2-1/2" DIA. FACE, GLYCERIN FILLED AND FULL SCALE ACCURACY TO ±1%. (TRERICE NO. 700 SERIES OR EQUAL)
   - F) THERMOMETER SHALL BE A 9" ADJUSTABLE ANGLE TYPE WITH 2-1/2" INSERTION LENGTH. (TERICE CAT NO. A005 OR EQUAL)
   - G) AUTOMATIC AIR RELEASE SHALL PROVIDE DRIP FREE AUTOMATIC RELEASE OF AIR, 75 PSI, (BELL & GOSSETT NO.7) 1/8" MIPT CONNECTION.
4. CONTRACTOR SHALL BALANCE HYDRONIC SYSTEM AND AIR SYSTEMS TO VALUES SHOWN ON THE HEAT PIPING DIAGRAM, SHEET M-6 AND VENTILATION PLANS AND DETAILS, SHEET M-9.
5. ALL NEW PIPING SHALL BE PAINTED WITH ENAMEL ACCORDING TO THE TABLE BELOW (PIPE COLORS)
6. ALL VALVES AND EQUIPMENT SHALL BE CLEARLY NUMBERED OR IDENTIFIED WITH THE PROPER REFERENCE NUMBER BY THE CONTRACTOR AND NOTED ON THE AS-BUILTS RED LINE DRAWINGS.

VALVES: VALVE NUMBERING SHALL NOT CONFLICT WITH ANY EXISTING VALVE NUMBERING. SEQUENCE SHALL BE CONSECUTIVE INTEGERS FOLLOWING WATER FLOW PATH. TAGS SHALL BE 1" DIA. WITH 1/4" HIGH STAMPED LETTERING SECURELY FASTENED TO THE VALVE.

EQUIPMENT: NEW EQUIPMENT SHALL BE LABELED WITH THE APPROPRIATE "REF. #" AS SHOWN. REF # SHALL BE ENGRAVED ON 1/16" THICK BLACK PLASTIC WITH WHITE 1/2" LETTERING AND MOUNTED USING COMMERCIAL GRADE SELF-ADHESIVE TAPE.

EQUIPMENT OPERATING CHARACTERISTICS AND OPERATIONAL GUIDELINES

1. OPERATE THE CIRCULATION PUMP "P1" ON SPEED #3 CONTINUOUSLY.
2. SELECT THE APPROPRIATE WELL PUMP(S) (AT THE WELL PUMP CONTROL PANEL TURN TO "AUTO") TO MEET WATER REQUIREMENTS (COMMUNITY DEMAND, TANK FILLING AND BACKWASH SUPPLY)

WELL	OUTPUT
WW-#9	4 GPM (5760 GAL/DAY)
WW-#10	4 GPM (5760 GAL/DAY)
WW-#10	8 GPM (11,520 GAL/DAY)

3. ADJUST CHEMICAL FEED PUMPS (POLYMER, CHLORINE, FLUORIDE) AS REQUIRED TO MATCH WELL WATER-PRODUCTION.
4. MAINTAIN A MINIMUM 45°F WATER TEMPERATURE IN THE WELL-WATER CIRCULATION LOOP. ADJUST AQUASTAT A1 AND BALANCING VALVE BV1 AS REQUIRED.

PIPE COLORS

TYPE OF PIPING	COLOR
RAW WATER	GREEN
POTABLE WATER	DARK BLUE
HEATING (JACKET WATER)	BLACK
FUEL	BLAZE ORANGE
NORMALLY OPEN VALVE HANDLES	GREEN
NORMALLY CLOSED VALVE HANDLES	RED

RECORD DRAWING CERTIFICATE
THESE DRAWINGS REFLECT RECORDED INFORMATION OBTAINED DURING CONSTRUCTION. INFORMATION PROVIDED HEREIN IS ACCURATE TO THE BEST OF MY KNOWLEDGE.
NAME DATE

SCALE: NTS
BAR IS ONE INCH ON ORIGINAL DRAWING 0 1"
IF NOT ONE INCH ON THIS SHEET ADJUST SCALES ACCORDINGLY

CONSTRUCTION RECORD
FIELD BOOK
STAKING
FOREMAN
AS-BUILT
INSPECTOR

STATE OF ALASKA 49TH
Lloyd A. Ferguson No. CE 5962
REGISTERED PROFESSIONAL ENGINEER

WATER AND SEWER SYSTEM IMPROVEMENTS
SYSTEM SCHEMATIC, LEGEND AND GENERAL NOTES
CHEFORNAK, ALASKA

CE2 ENGINEERS, INC.
ANCHORAGE, ALASKA

REVISION	BY	DATE

Project No. ____ Date FEB. 1998
Designed LAP
Drawn D-J.W.
Approved CLE

Sheet No. M-1
SHEET 18 OF 39

WELL PUMP REMOVAL

1. INSERT PORTABLE HOIST (HALLIDAY PROD. 1DRA24 W/ 2 SPEED WINCH, 150'x1/4"ø CAPACITY) INTO FOUNDATION SOCKET, SEE (4/M-2)
2. REMOVE EAST AND NORTH SIDES OF ENCLOSURE AND OPEN TOP HALF OF ROOF.
3. CONNECT 1/4" WIRE ROPE TO WINCH DRUM (PIER MANUFACTURER'S RECOMMENDATIONS) AND REEL IN ALL SLACK IN THE CABLE SO PUMP AND DROP PIPE ASSEMBLY IS COMPLETELY SUPPORTED BY THE HOIST.
4. REMOVE ALL WIRE ROPE STOPS (ABOVE SANITARY WELL SEAL) AND SANITARY WELL SEAL.
5. SLOWLY REMOVE WELL PUMP AND DROP PIPE ASSEMBLY. CAREFULLY CUT EACH NYLON TIE AS THEY RISE ABOVE THE WELL CASING.
6. REPLACE PUMP AND DROP PIPE ASSEMBLY WHILE MAINTAINING A TIGHT NEAT BUNDLE AS SHOWN IN (A/M-3)

COMPLETE STEPS 1 THROUGH 5 IN REVERSE ORDER TO INSTALL WELL PUMP.

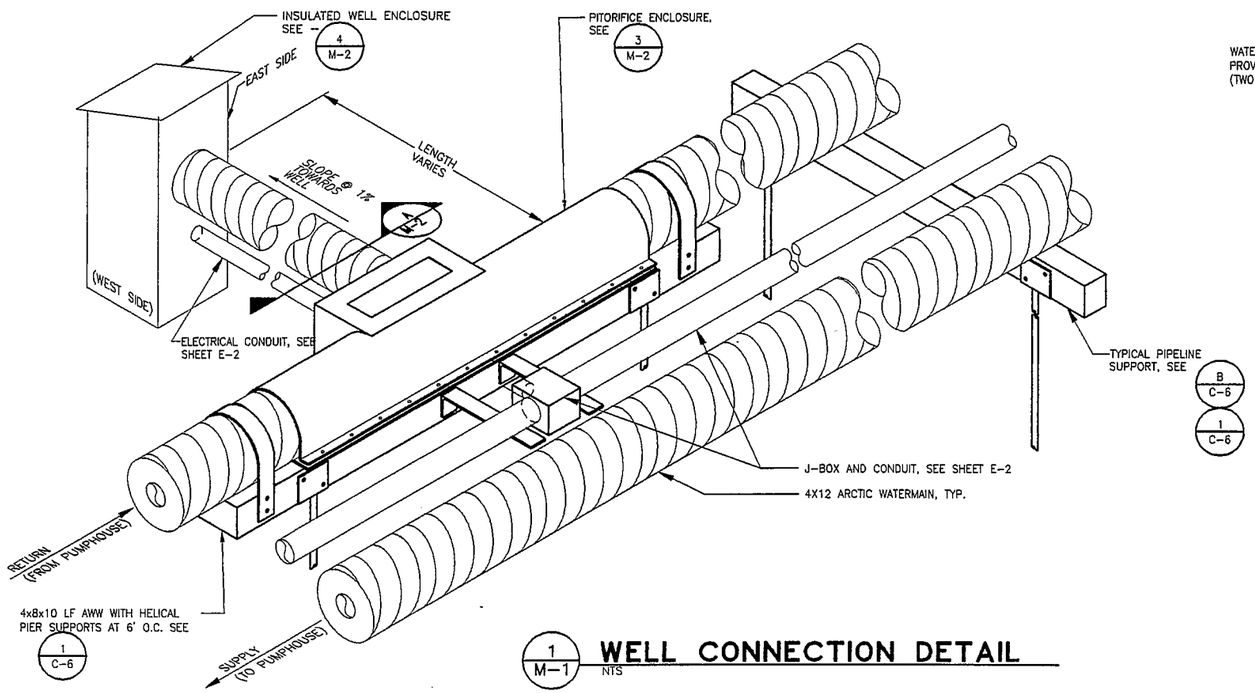

(1/M-1) WELL CONNECTION DETAIL
NTS

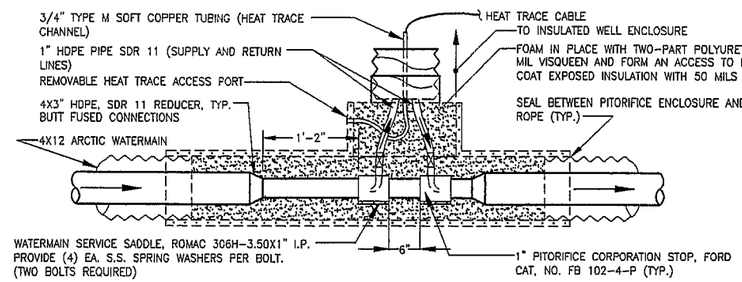

(2/M-2) PITORIFICE CONNECTION DETAIL
NTS

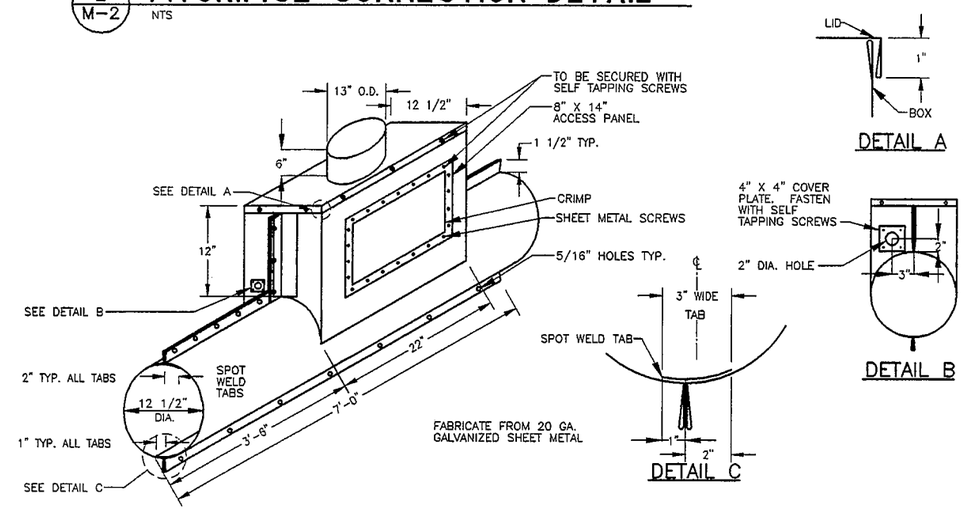

(3/M-2) PITORIFICE ENCLOSURE DETAIL
NTS

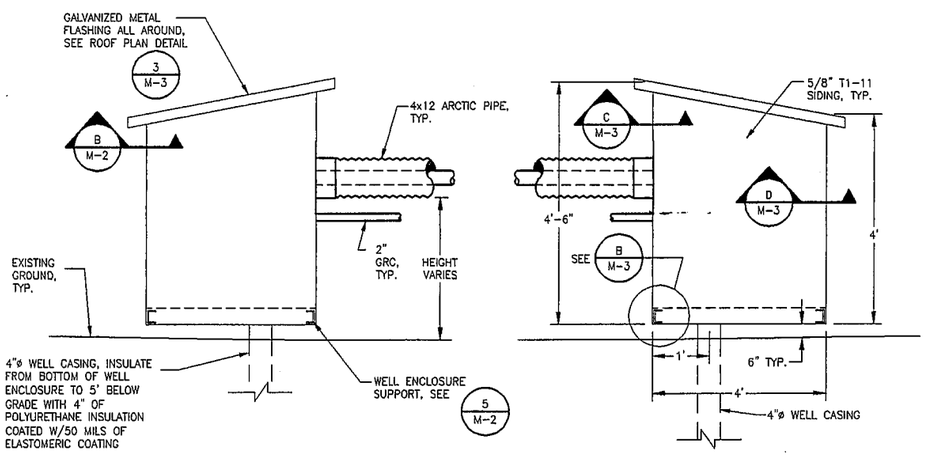

(4/M-2) WELL ENCLOSURE
NTS

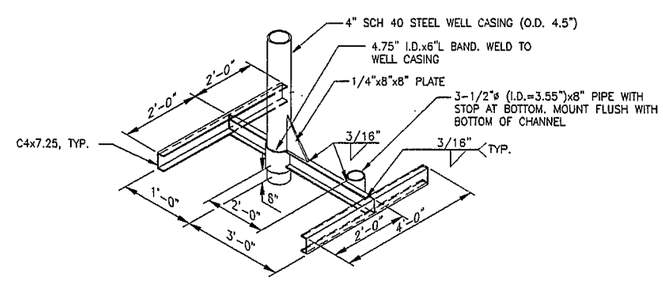

(5/M-2) WELL ENCLOSURE SUPPORT
NTS

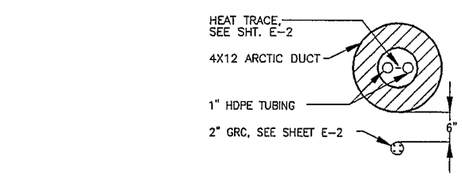

(A/M-2) TYPICAL SECTION
NTS

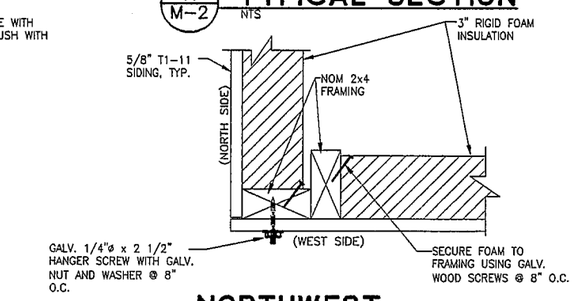

(B/M-2) NORTHWEST CORNER JOINT DETAIL
NTS

RECORD DRAWING CERTIFICATE
THESE DRAWINGS REFLECT RECORDED INFORMATION OBTAINED DURING CONSTRUCTION. INFORMATION PROVIDED HEREIN IS ACCURATE TO THE BEST OF MY KNOWLEDGE.
NAME DATE

SCALE: AS NOTED

BAR IS ONE INCH ON ORIGINAL DRAWING 0 1"
IF NOT ONE INCH ON THIS SHEET, ADJUST SCALES ACCORDINGLY

CONSTRUCTION RECORD
FIELD BOOK
STAKING
FOREMAN
AS-BUILT
INSPECTOR

STATE OF ALASKA 49TH
Lloyd A. Ferguson No. CE 9802
REGISTERED PROFESSIONAL ENGINEER

WATER AND SEWER SYSTEM IMPROVEMENTS
WELL CONNECTIONS DETAILS
CHEFORNAK, ALASKA

CE2 ENGINEERS, INC.
ANCHORAGE, ALASKA

REVISION	BY	DATE

Project No.
Date MAY 1998
Designed LAP
Drawn DRG
Approved CLE

Sheet No. M-2
SHEET 19 OF 39

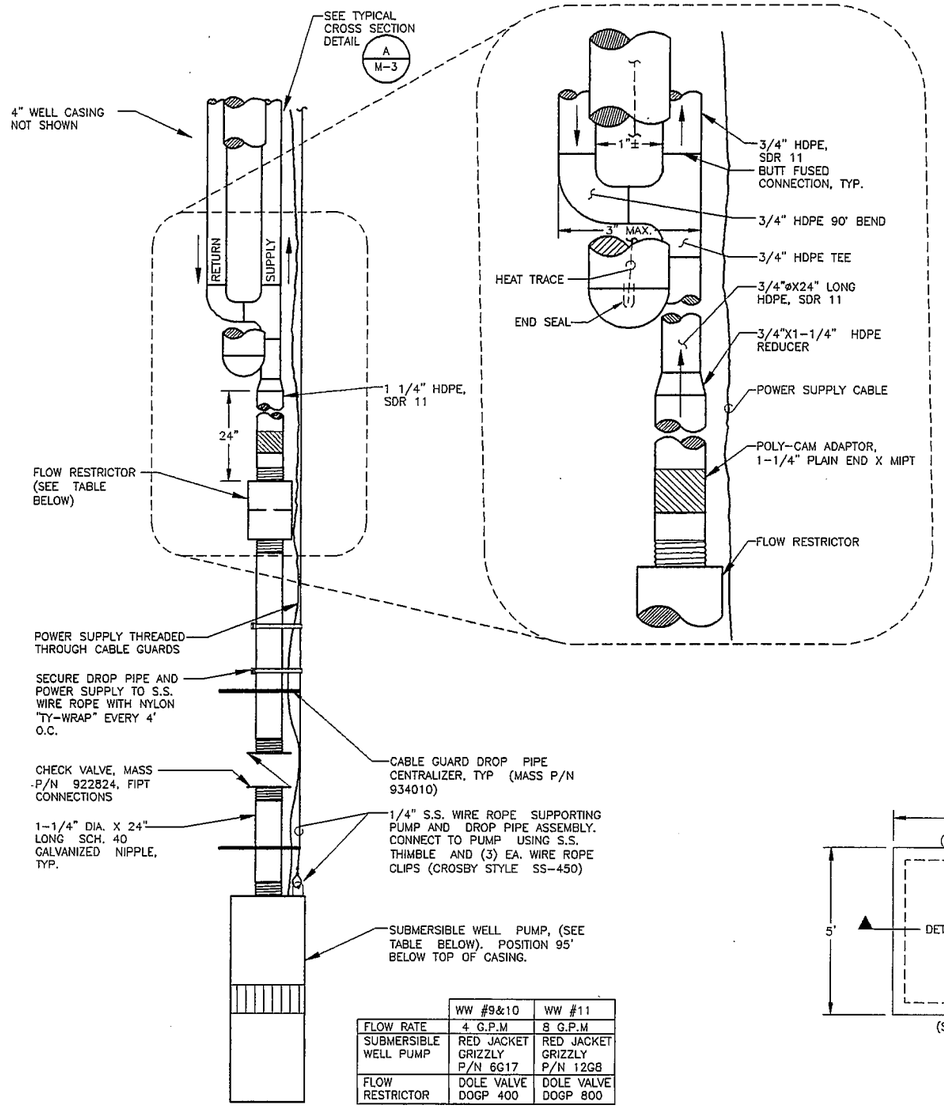

	WW #9&10	WW #11
FLOW RATE	4 G.P.M	8 G.P.M
SUBMERSIBLE WELL PUMP	RED JACKET GRIZZLY P/N 6G17	RED JACKET GRIZZLY P/N 12G8
FLOW RESTRICTOR	DOLE VALVE DOGP 400	DOLE VALVE DOGP 800

1 M-3 TYPICAL WELL PROFILE
NTS

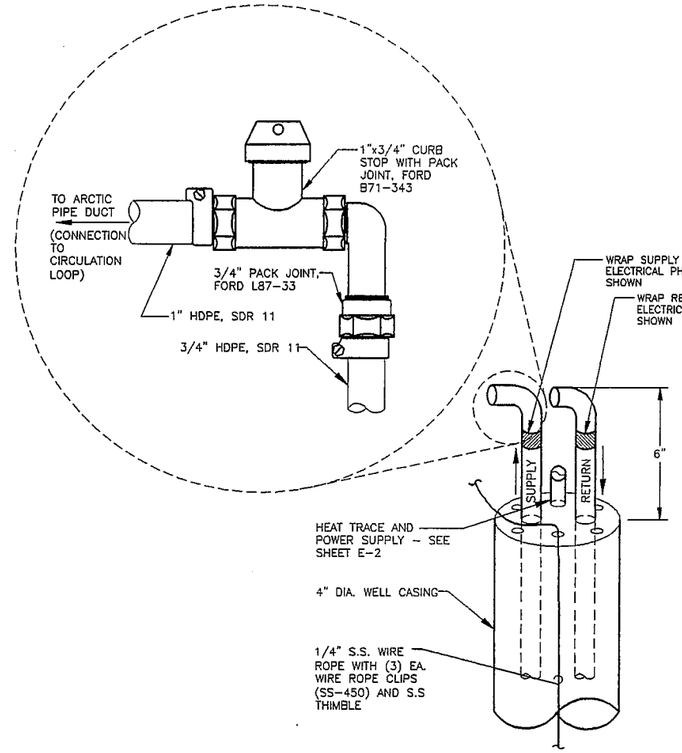

2 M-3 TYPICAL WELL HEAD DETAIL
NTS

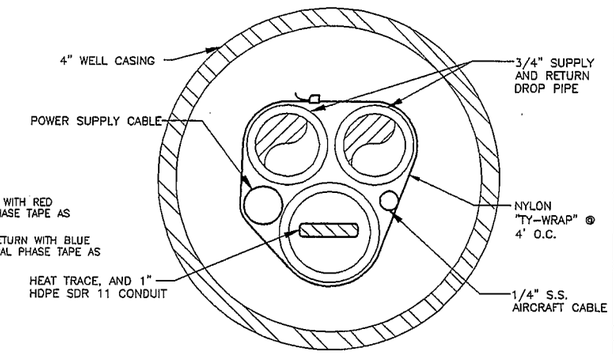

A M-3 TYPICAL DROP PIPE SECTION
NTS

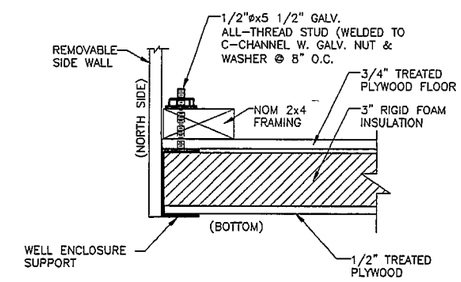

B M-3 SUPPORT ATTACHMENT DETAIL
NTS

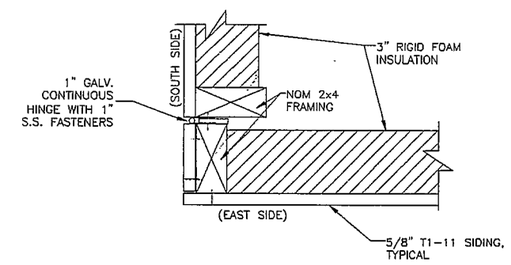

C M-3 SOUTHEAST CORNER JOINT DETAIL
NTS

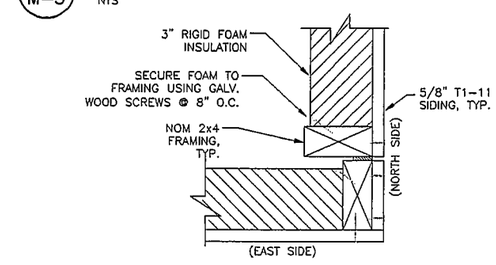

D M-3 NORTHEAST CORNER JOINT DETAIL
NTS

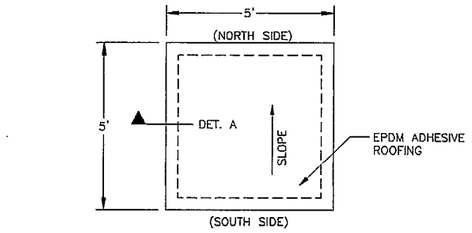

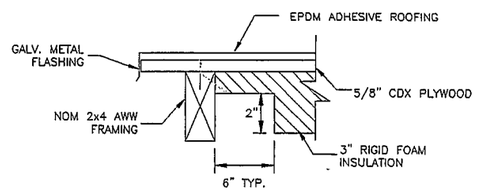

DETAIL A

3 M-3 ROOF PLAN
NTS

RECORD DRAWING CERTIFICATE
THESE DRAWINGS REFLECT RECORDED INFORMATION OBTAINED DURING CONSTRUCTION. INFORMATION PROVIDED HEREIN IS ACCURATE TO THE BEST OF MY KNOWLEDGE.
NAME DATE

SCALE: AS NOTED
BAR IS ONE INCH ON ORIGINAL DRAWING 0 1"
IF NOT ONE INCH ON THIS SHEET, ADJUST SCALES ACCORDINGLY

CONSTRUCTION RECORD
FIELD BOOK
STAKING
FOREMAN
AS-BUILT
INSPECTOR

STATE OF ALASKA 49TH Lloyd A. Parsons NO. CE 9692 REGISTERED PROFESSIONAL ENGINEER

WATER AND SEWER SYSTEM IMPROVEMENTS
DROP PIPE WELL CONNECTION DETAILS
CHEFORNAK, ALASKA

CE2 ENGINEERS, INC.
ANCHORAGE, ALASKA

REVISION	BY	DATE

Project No. ____ Date MAY 1998
Designed LAP
Drawn DRG
Approved CLE

Sheet No. M-3
SHEET 20 OF 39

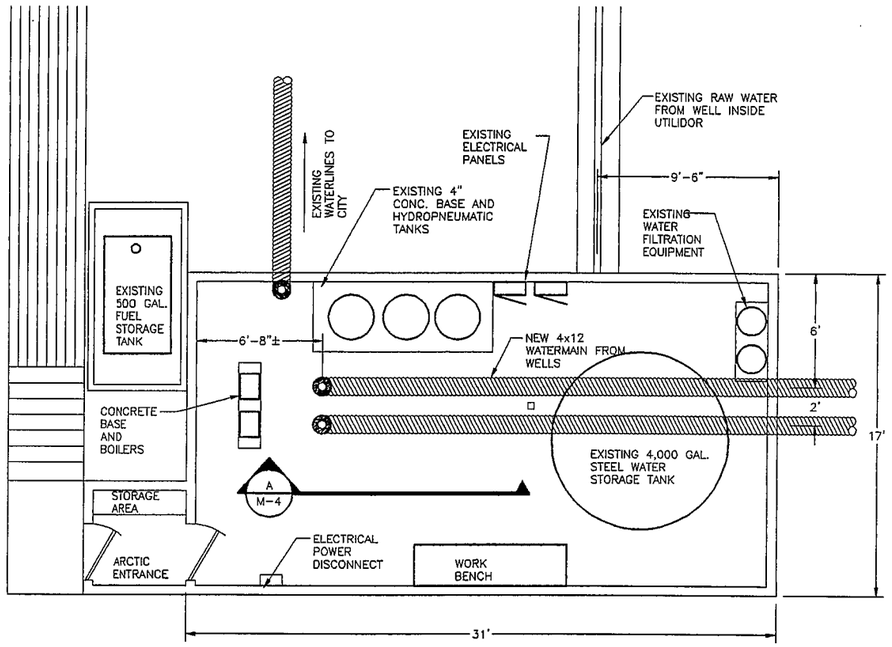

1 / M-4 NEW WELL WATER CIRCULATION LOOP PIPING CONNECTION

SCALE: 1/4" = 1'-0"

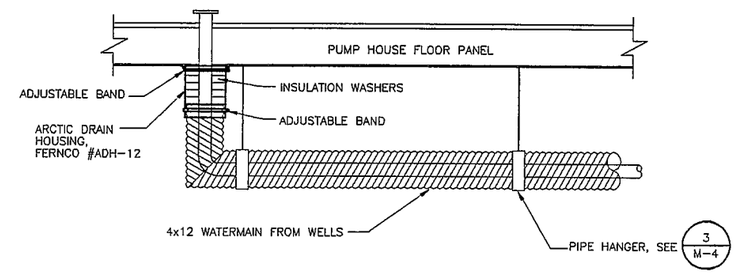

A / M-4 ARCTIC PIPE FLOOR PENETRATION

SCALE: 1/2" = 1'-0"

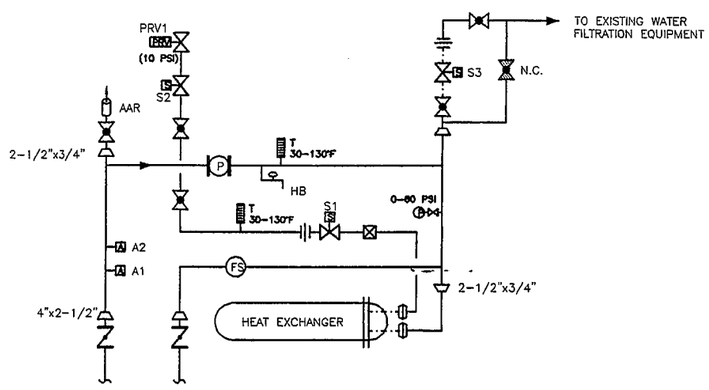

2 / M-4 CIRCULATION PIPING DIAGRAM

NTS

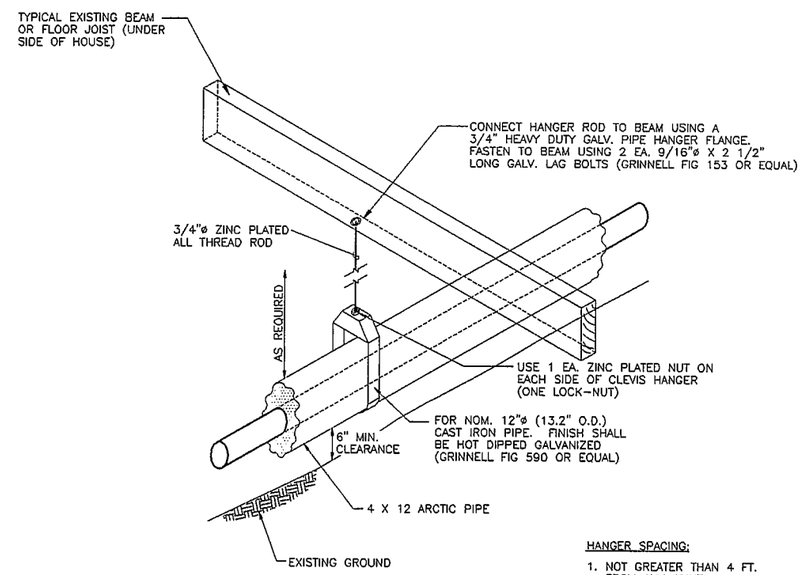

HANGER SPACING:

1. NOT GREATER THAN 4 FT. FROM ANY JOINT
2. NOT GREATER THAN 8 FT. BETWEEN HANGERS

3 / M-4 ARCTIC PIPE HANGER DETAIL

NTS

RECORD DRAWING CERTIFICATE

THESE DRAWINGS REFLECT RECORDED INFORMATION OBTAINED DURING CONSTRUCTION. INFORMATION PROVIDED HEREIN IS ACCURATE TO THE BEST OF MY KNOWLEDGE.

NAME DATE

SCALE: AS NOTED

BAR IS ONE INCH ON ORIGINAL DRAWING 0 1"

IF NOT ONE INCH ON THIS SHEET, ADJUST SCALE ACCORDINGLY

CONSTRUCTION RECORD

FIELD BOOK

STAKING

FOREMAN

AS-BUILT

INSPECTOR

STATE OF ALASKA 49TH Lloyd A. Peterson NO. CE 9692 REGISTERED PROFESSIONAL ENGINEER

WATER AND SEWER SYSTEM IMPROVEMENTS

PUMPHOUSE MODIFICATION DETAILS

CHEFORNAK, ALASKA

CE2 ENGINEERS, INC.

ANCHORAGE, ALASKA

REVISION	BY	DATE

Project No. ____ Date FEB. 1998

Designed LAP

Drawn D-J.W.

Approved CLE

Sheet No. M-4

SHEET 21 OF 39

D:\PROJECTS\CHEFORNAK\M-4.DWG

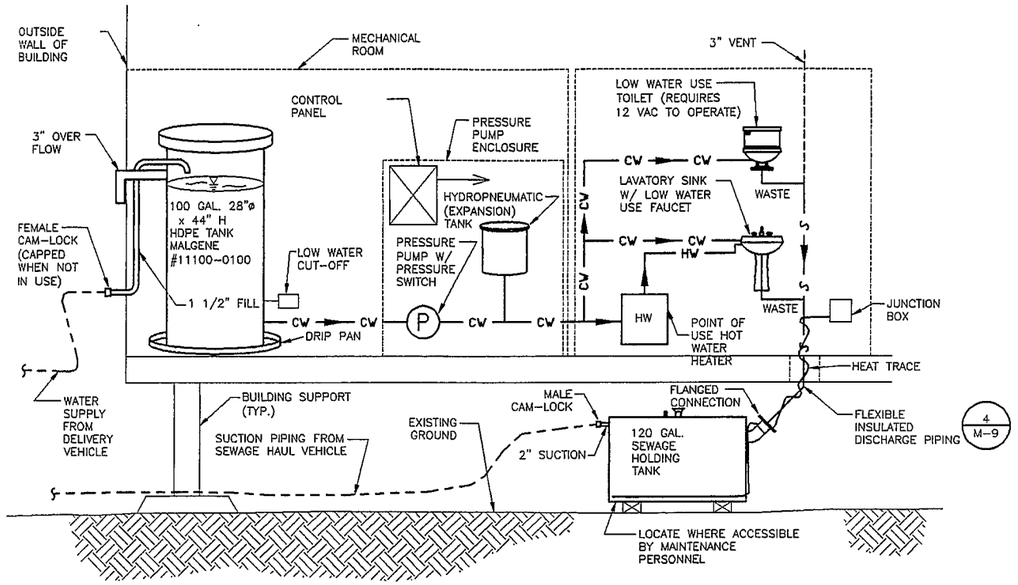

1 M-5 PLUMBING IMPROVEMENTS DIAGRAM

NTS

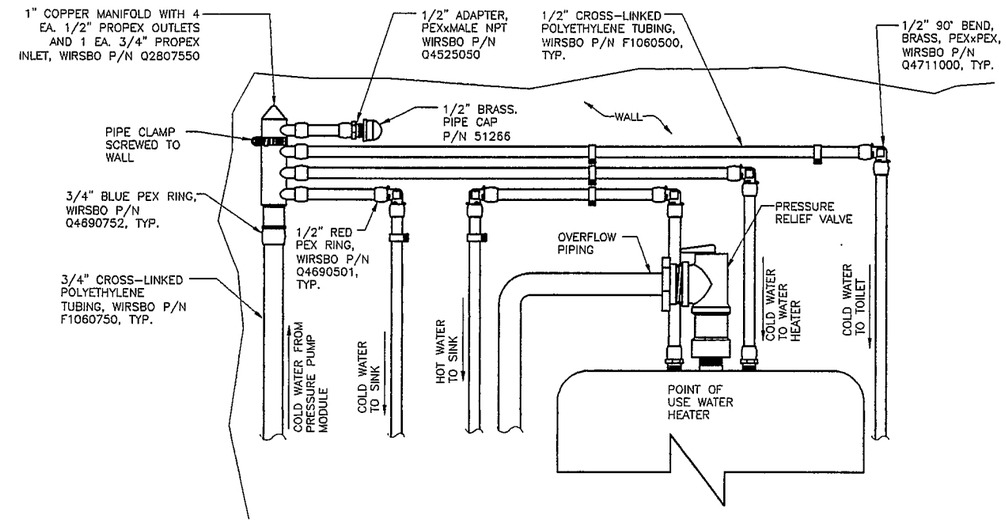

2 M-5 BATHROOM HOT AND COLD WATER PIPING DETAIL

NTS

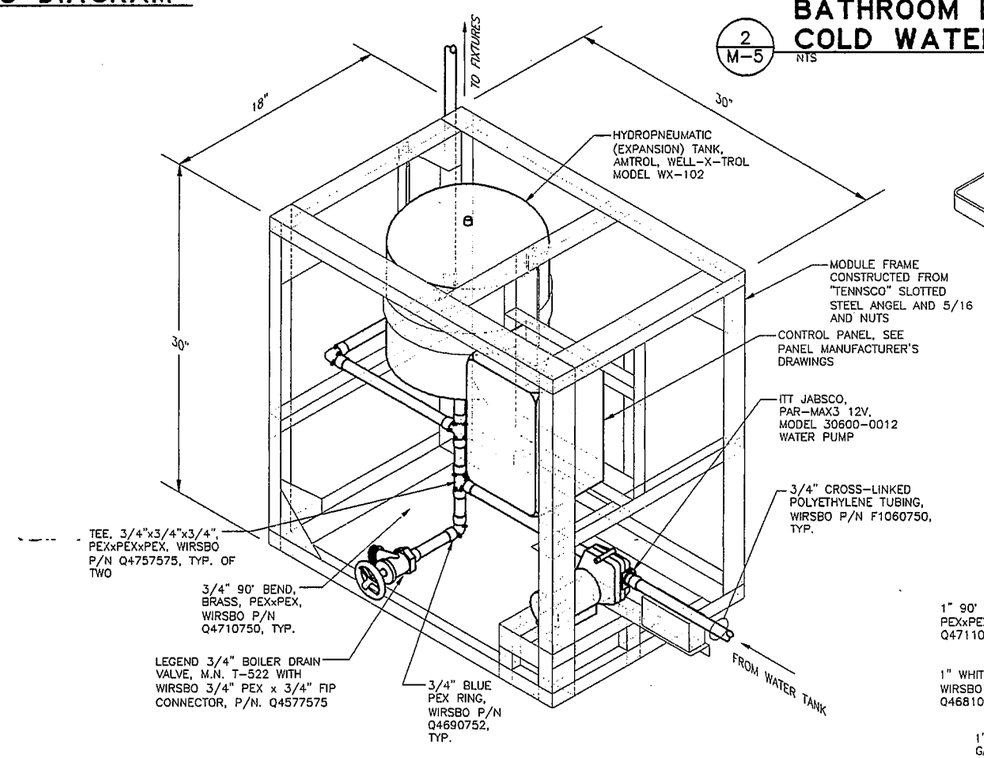

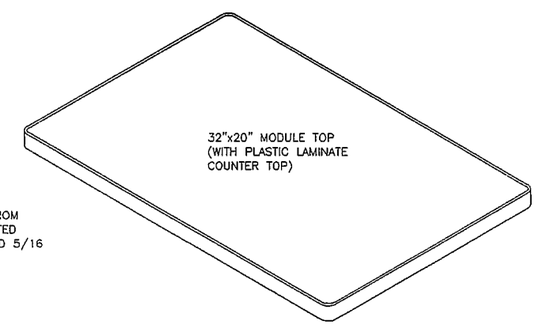

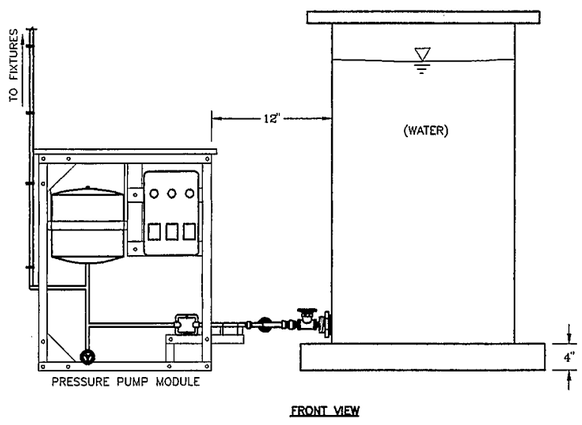

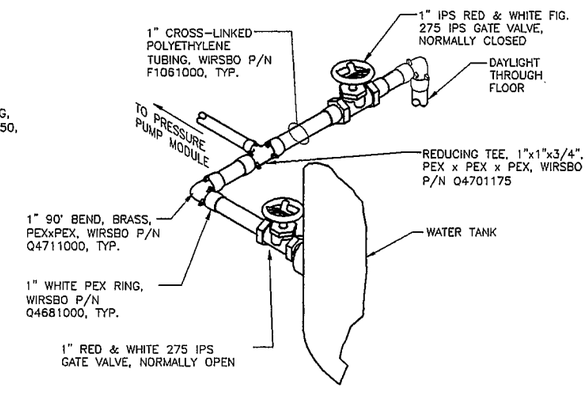

3 M-5 TYPICAL PRESSURE PUMP MODULE

NTS

RECORD DRAWING CERTIFICATE

THESE DRAWINGS REFLECT RECORDED INFORMATION OBTAINED DURING CONSTRUCTION. INFORMATION PROVIDED HEREIN IS ACCURATE TO THE BEST OF MY KNOWLEDGE.

NAME DATE

SCALE: AS NOTED

BAR IS ONE INCH ON ORIGINAL DRAWING 0 1"

IF NOT ONE INCH ON THIS SHEET, ADJUST SCALES ACCORDINGLY

CONSTRUCTION RECORD

FIELD BOOK

STAKING

FOREMAN

AS-BUILT

INSPECTOR

STATE OF ALASKA 49TH Lloyd A. Ferguson NO. CE 9692 REGISTERED PROFESSIONAL ENGINEER

WATER AND SEWER SYSTEM IMPROVEMENTS

PLUMBING IMPROVEMENTS DETAILS

CHEFORNAK, ALASKA

CE2 ENGINEERS, INC.

ANCHORAGE, ALASKA

REVISION	BY	DATE

Project No. ____ Date FEB. 1998

Designed LAP

Drawn D-J.W.

Approved CLE

Sheet No. M-5

SHEET 22 OF 39

NOTES

1. PRIOR TO COMMENCEMENT OF ANY WORK:
   A. SIGNED HOME OWNER AGREEMENTS (APPROVED BY THE TRADITIONAL COUNCIL AND VILLAGE SAFE WATER) SHALL BE OBTAINED BY THE CONTRACTOR.
   B. FIELD VERIFY THAT PROPOSED FLOOR PLANS ARE CORRECT.
   C. FIELD VERIFY SUITABILITY OF LOCATION FOR WATER AND SEWAGE HOLDING TANKS.
   D. CONFIRM THAT NEW SERVICE ACCESS BOARDWALKS ARE APPROPRIATELY LOCATED.
2. ALL DOMESTIC WATER PIPING COMPONENTS SHALL BE INSTALLED AS SPECIFIED. WHEN "WIRSBO" COMPONENTS ARE CALLED OUT, USE ONLY "WIRSBO" PARTS AND MANUFACTURER'S PUBLISHED INSTALLATION PROCEDURES.

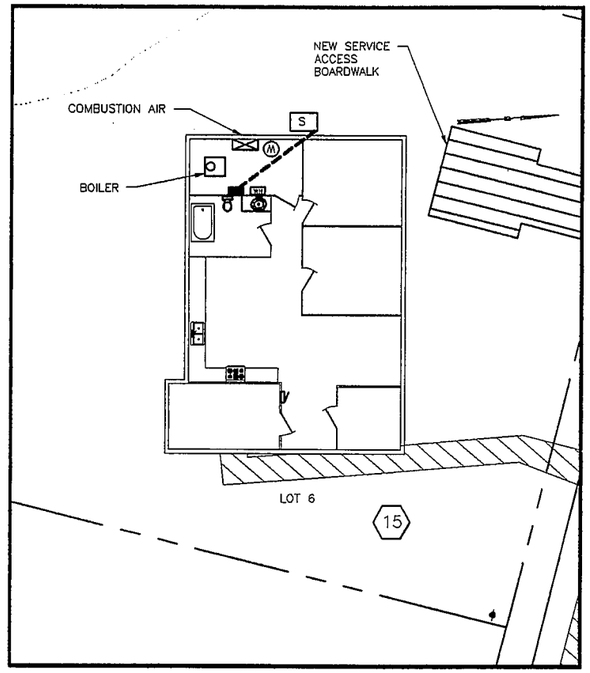

HOME NO. 1: GEORGE BILLY – BLOCK 15, LOT 6

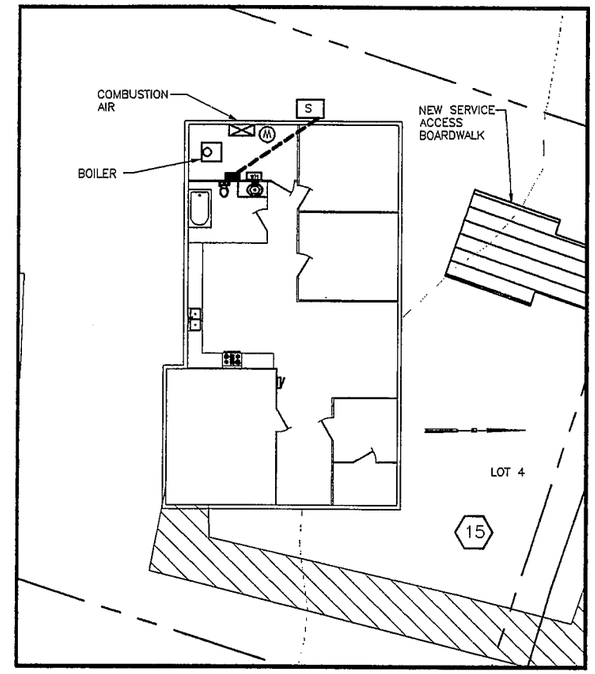

HOME NO. 2: PETER MATHEW, SR. – BLOCK 15, LOT 4

LEGEND

EXISTING	PROPOSED	DESCRIPTION
		NEW TOILET
		NEW SINK
		PUMP, PRESSURE TANK MODULE
		ELECTRICAL PANEL
		TUB
		KITCHEN SINK
		RANGE / OVEN
	W	WATER TANK
	S	SEWAGE HOLDING TANK
	WH	POINT OF USE WATER HEATER
		BUILDING STRUCTURE
		BOARDWALK

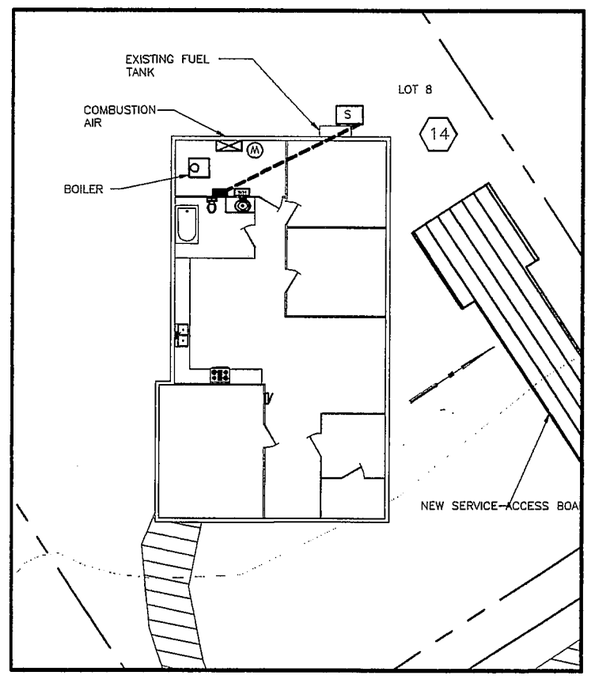

HOME NO. 3: DENNIS PANRUK – BLOCK 14, LOT 8

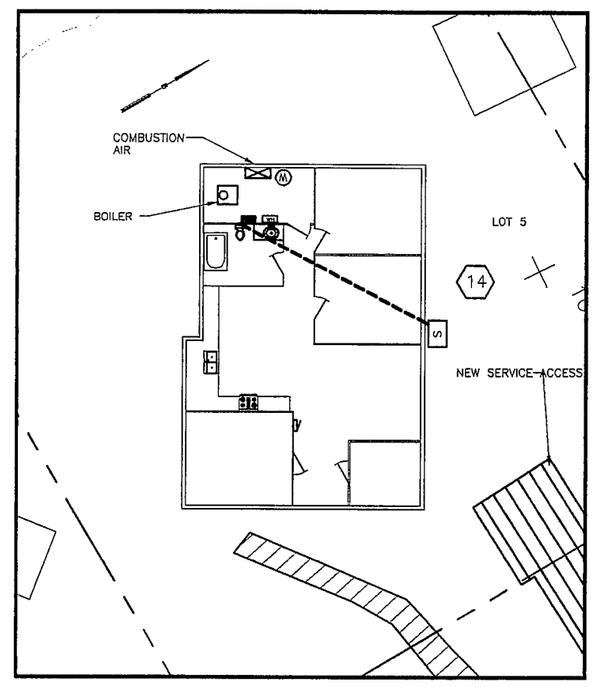

HOME NO. 4: MARTHA WASILI – BLOCK 14, LOT 5

RECORD DRAWING CERTIFICATE
THESE DRAWINGS REFLECT RECORDED INFORMATION OBTAINED DURING CONSTRUCTION. INFORMATION PROVIDED HEREIN IS ACCURATE TO THE BEST OF MY KNOWLEDGE.
NAME DATE

SCALE: 1" = 10'
BAR IS ONE INCH ON ORIGINAL DRAWING
0 1"
IF NOT ONE INCH ON THIS SHEET, ADJUST SCALES ACCORDINGLY

CONSTRUCTION RECORD
FIELD BOOK
STAKING
FOREMAN
AS-BUILT
INSPECTOR

STATE OF ALASKA 49TH REGISTERED PROFESSIONAL ENGINEER Lloyd A. Parson NO. CE 9692

WATER AND SEWER SYSTEM IMPROVEMENTS
PLUMBING IMPROVEMENTS FLOOR PLANS AND LEGEND
CHEFORNAK, ALASKA

CE2 ENGINEERS, INC.
ANCHORAGE, ALASKA

REVISION	BY	DATE

Project No.
Date MAY 1998
Designed LAP
Drawn D-J.W.
Approved CLE

Sheet No. M-6
SHEET 23 OF 39

D:\PROJECTS\CHEFORNAK\M-6.DWG

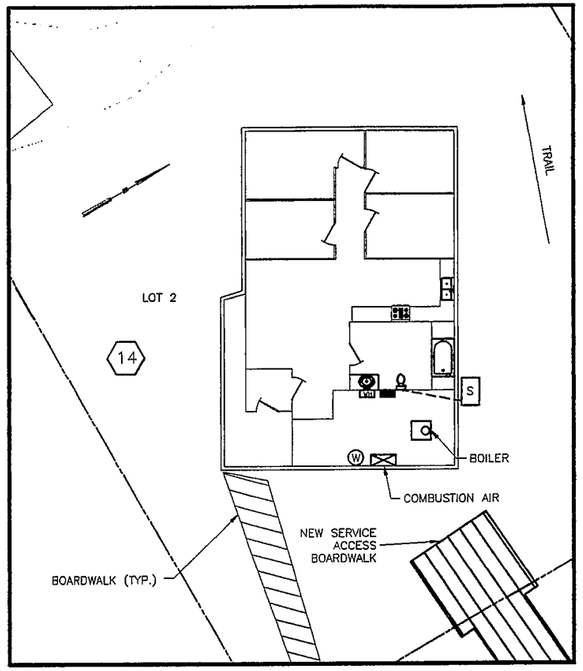

HOME NO. 5: CYRIL ALEXIE – BLOCK 14, LOT 2

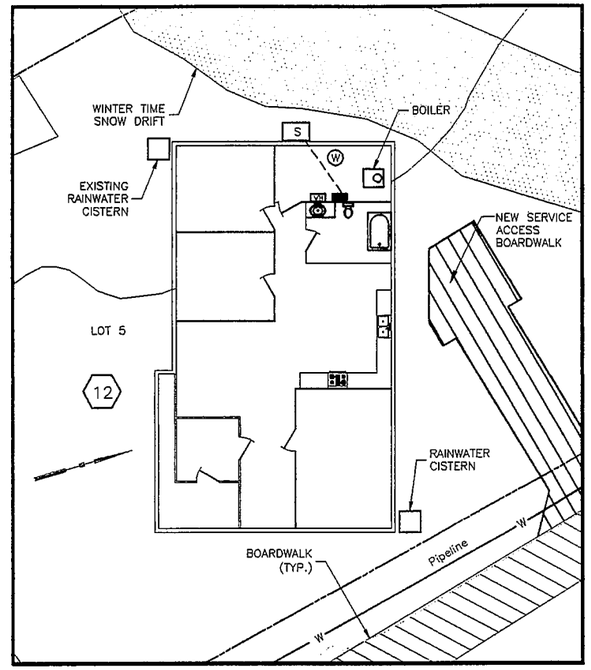

HOME NO. 6: HILDA WASSILLIE – BLOCK 12, LOT 5

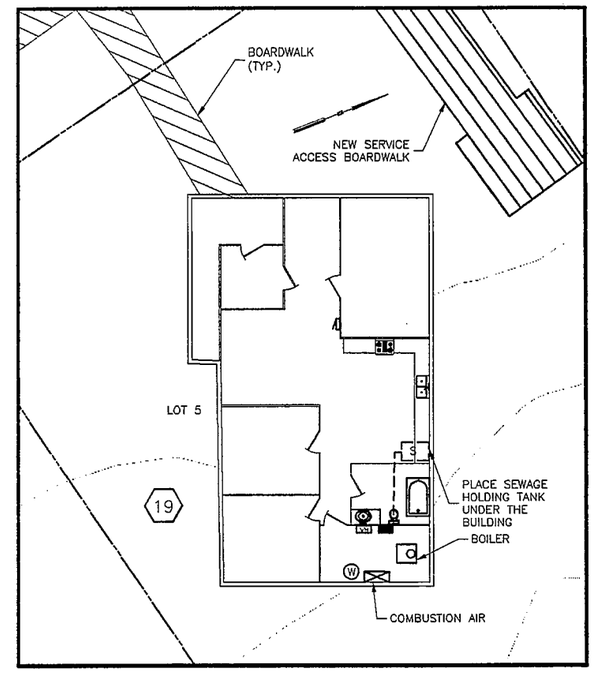

HOME NO. 7: JOSEPHINE WISEMAN – BLOCK 19, LOT 5

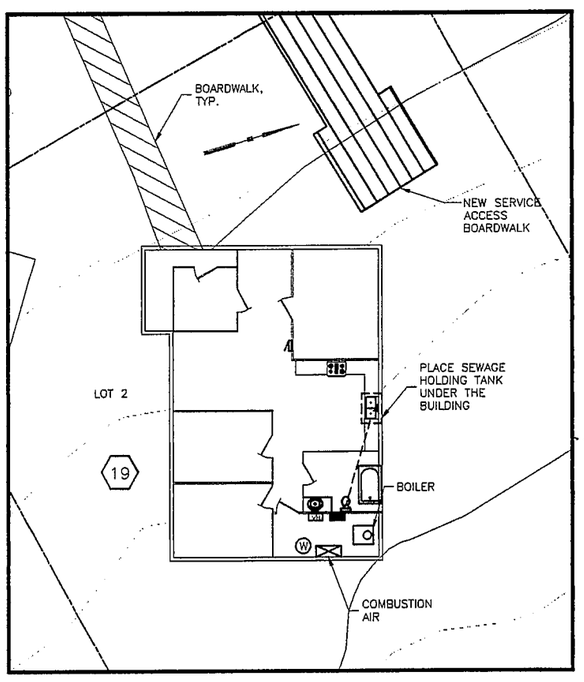

HOME NO. 8: LIZZIE TIRCHICK – BLOCK 19, LOT 2

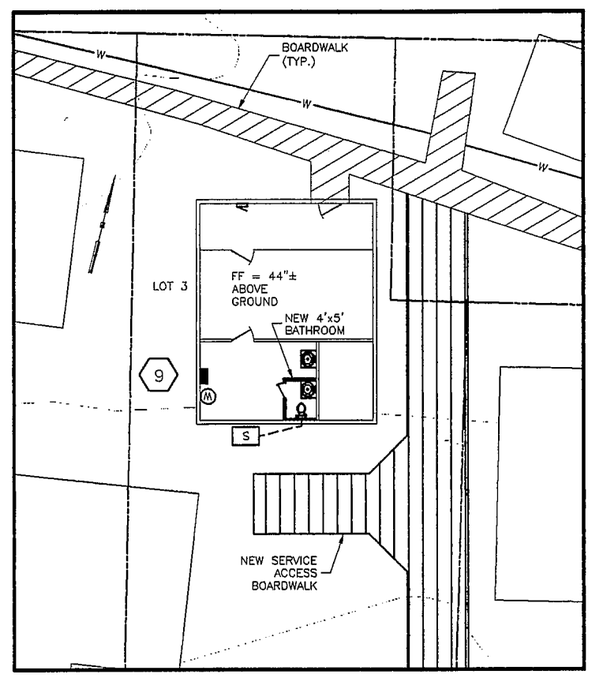

HOME NO. 9: ANNA AVNGIAK – BLOCK 9, LOT 3

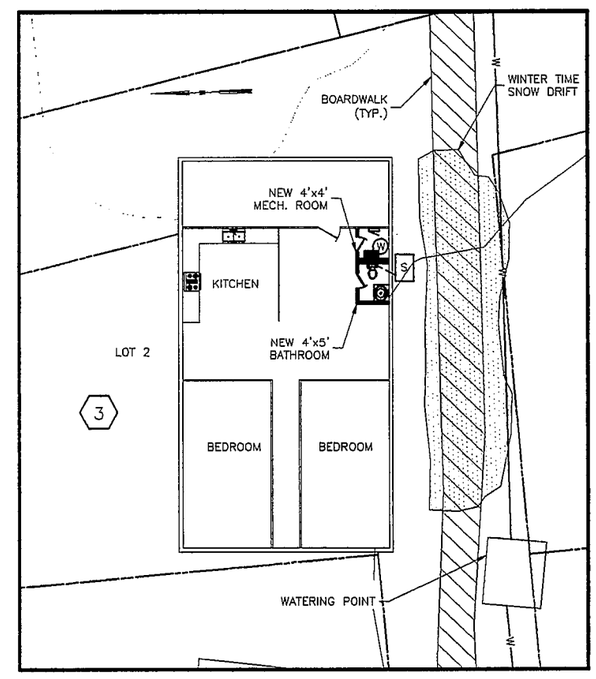

HOME NO. 10: DAVID LEWIS – BLOCK 3, LOT 2

RECORD DRAWING CERTIFICATE

THESE DRAWINGS REFLECT RECORDED INFORMATION OBTAINED DURING CONSTRUCTION. INFORMATION PROVIDED HEREIN IS ACCURATE TO THE BEST OF MY KNOWLEDGE.

NAME DATE

SCALE: 1" = 10'

THIS BLOCK WILL NOT BE ORIGINAL DRAWING 0 1"

IF NOT ONE INCH ON THIS SHEET, ADJUST SCALES ACCORDINGLY

CONSTRUCTION RECORD

FIELD BOOK

STAKING

FOREMAN

AS-BUILT

INSPECTOR

STATE OF ALASKA 49TH LAPAR PARKER ASSOCIATES, INC. REGISTERED PROFESSIONAL ENGINEER NO. CE 9932

WATER AND SEWER SYSTEM IMPROVEMENTS

PLUMBING UPGRADE FLOOR PLANS

CHEFORNAK, ALASKA

CE2 ENGINEERS, INC.

ANCHORAGE, ALASKA

REVISION	BY	DATE

Project No.

Date MAY 1998

Designed LAP

Drawn D-J.W.

Approved CLE

Sheet No. M-7

SHEET 24 OF 39

S:\PROJECTS\CHEFORNAK\M-7.DWG

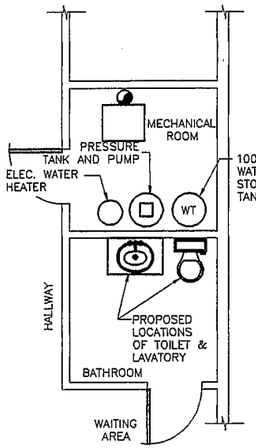

COMPONENT LAYOUT

NTS

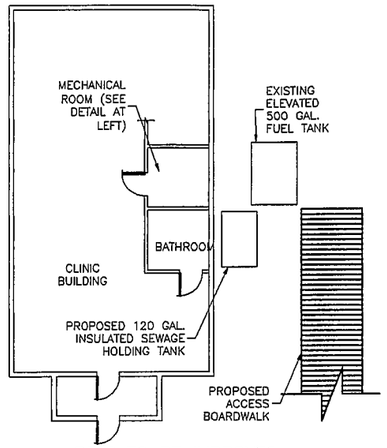

AREAS TO BE IMPROVED

NTS

CLINIC PLUMBING UPGRADES

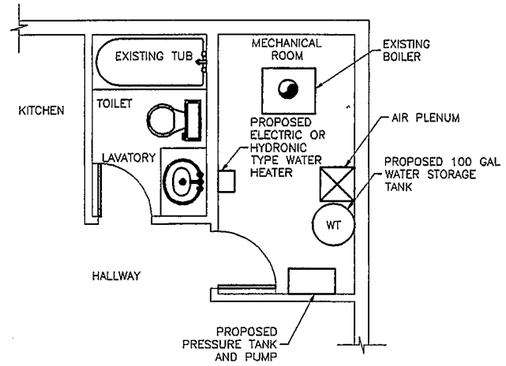

TYPICAL SUBDIVISION HOUSE (HOUSES 1 – 8)

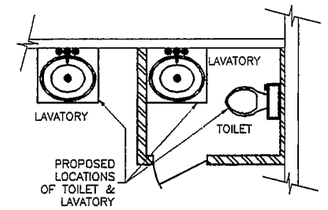

HOUSE 9

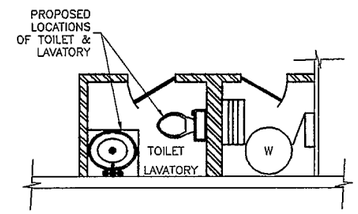

HOUSE 10

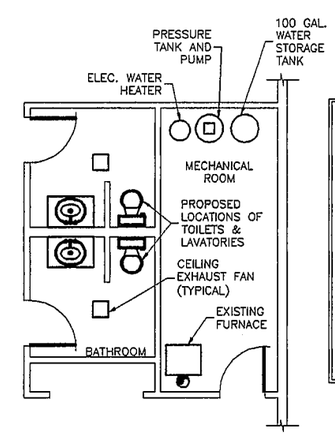

COMPONENT LAYOUT

NTS

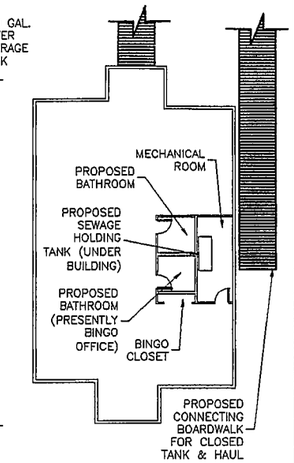

AREAS TO BE IMPROVED

NTS

CITY OFFICE COMPLEX PLUMBING UPGRADES

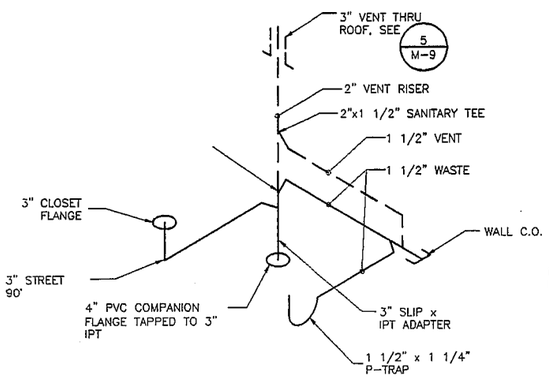

TYPICAL DWV ISOMETRIC

NTS (HOUSES 1 – 8)

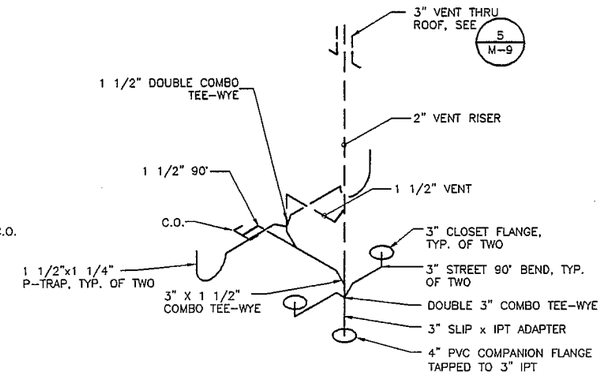

CITY BUILDING DWV ISOMETRIC

NTS

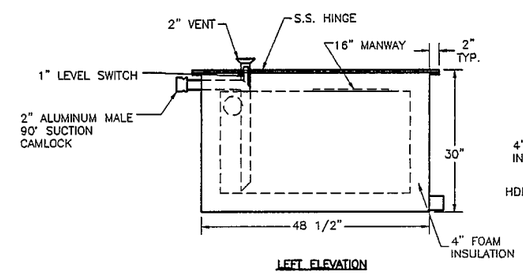

LEFT ELEVATION

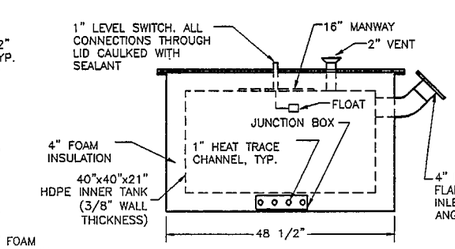

REAR ELEVATION

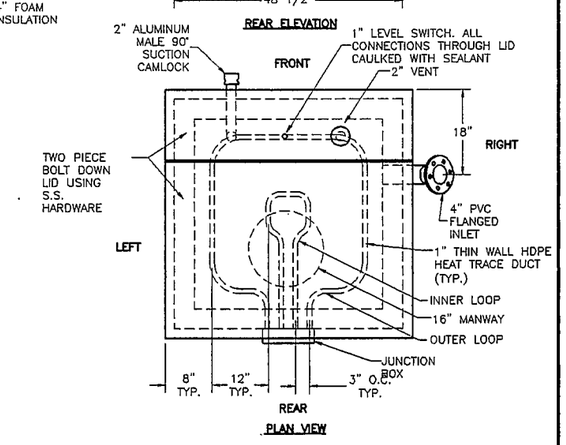

PLAN VIEW

SEWAGE HOLDING TANK DETAIL

SCALE: 3/4" = 1'-0"

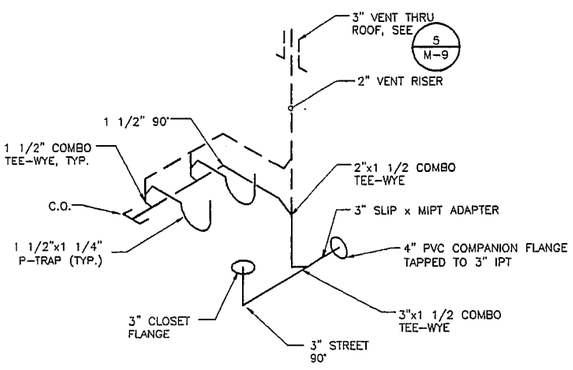

HOUSE 9 DWV ISOMETRIC

NTS

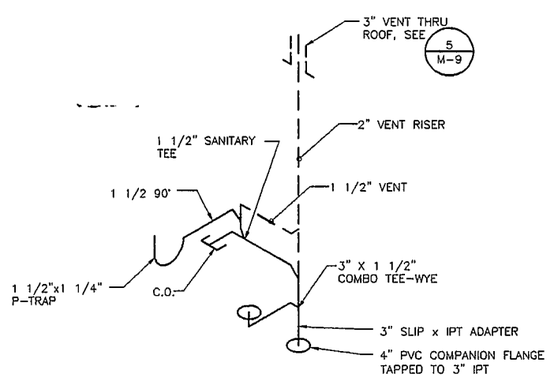

CLINIC DWV ISOMETRIC

NTS

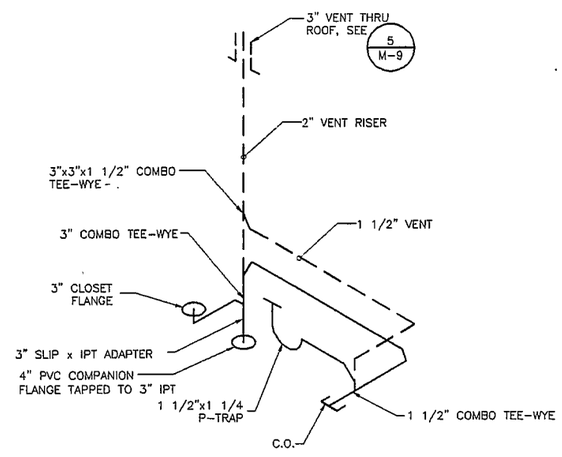

HOUSE 10 DWV ISOMETRIC

NTS

RECORD DRAWING CERTIFICATE

THESE DRAWINGS REFLECT RECORDED INFORMATION OBTAINED DURING CONSTRUCTION. INFORMATION PROVIDED HEREIN IS ACCURATE TO THE BEST OF MY KNOWLEDGE.

NAME: DATE:

SCALE: AS NOTED

BAR 2" ONE INCH ON ORIGINAL DRAWING 0 1"

IF NOT ONE INCH ON THIS SHEET, ADJUST SCALES ACCORDINGLY

CONSTRUCTION RECORD

FIELD BOOK

STAKING

FOREMAN

AS-BUILT

INSPECTOR

STATE OF ALASKA 49TH Lloyd A. Hansen ASSOCIATE REGISTERED PROFESSIONAL ENGINEER NO. CE 9692

WATER AND SEWER SYSTEM IMPROVEMENTS
PLUMBING UPGRADE
FLOOR PLANS
ISOMETRICS
AND DETAIL

CHEFORNAK, ALASKA

CE2 ENGINEERS, INC.

ANCHORAGE, ALASKA

REVISION	BY	DATE

Project No. ____ Date MAY 1998
Designed LAP
Drawn D-J.W.
Approved CLE

Sheet No. M-8

SHEET 25 OF 39

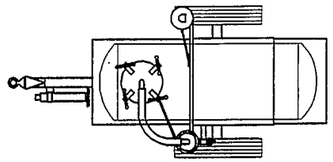

TOP VIEW

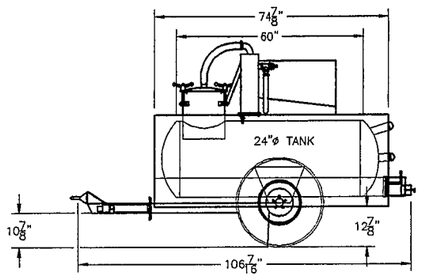

FULL TANK CAPACITY = 124 GALLONS

SIDE VIEW

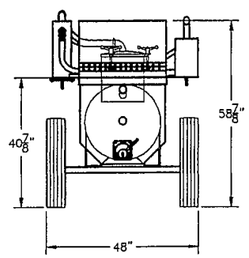

REAR VIEW

1 / M-9 TRAILER MOUNTED VACUUM INDUCTOR

SCALE: 1" = 2'-0"

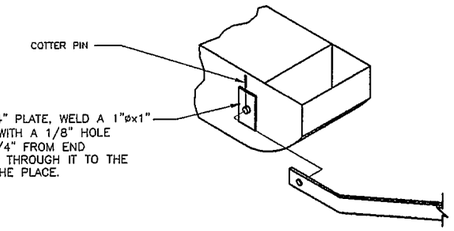

HAUL YOKE ATTACHMENT DETAIL

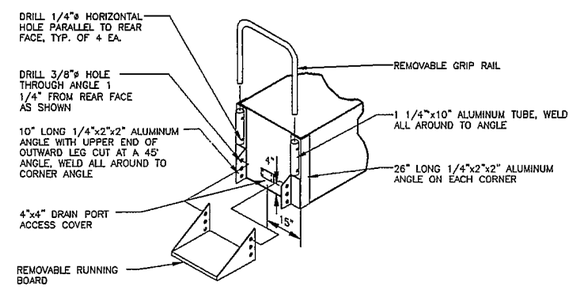

END VIEW

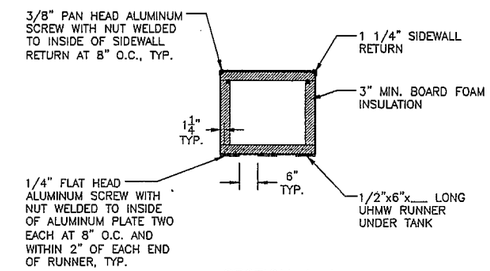

SECTION A-A

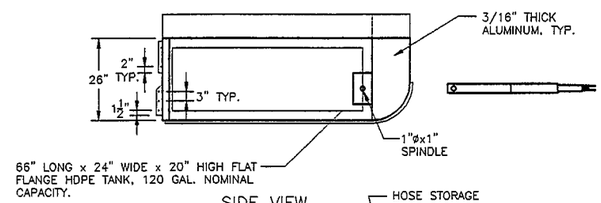

SIDE VIEW

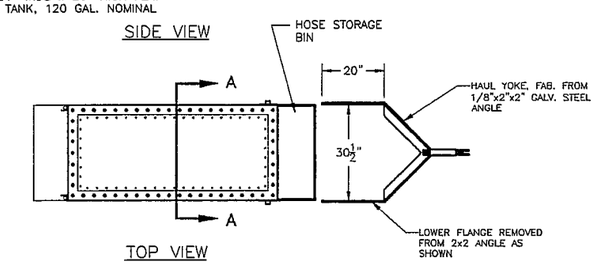

TOP VIEW

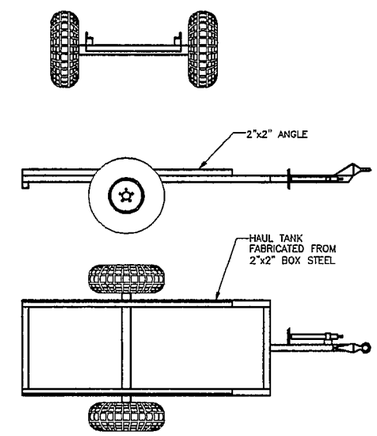

2 / M-9 WATER HAUL TANK AND TRAILER

SCALE: 1" = 2'-0"

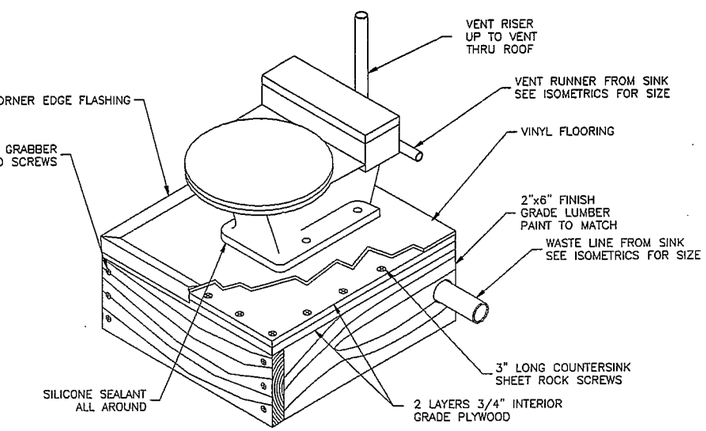

3 / M-9 WATERCLOSET PLATFORM DETAIL

NTS

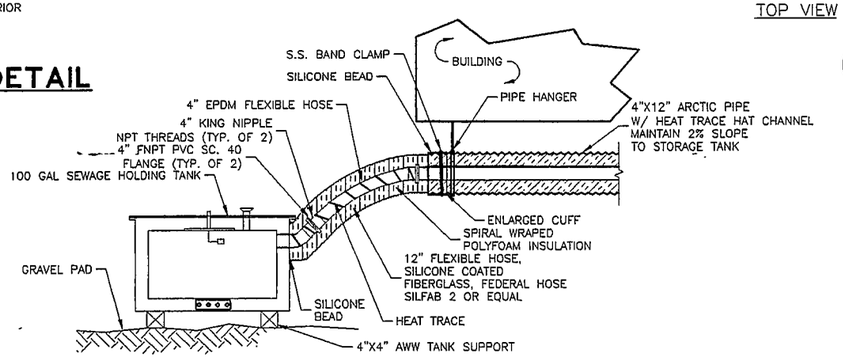

4 / M-9 SUMP CONNECTION DETAIL

NTS

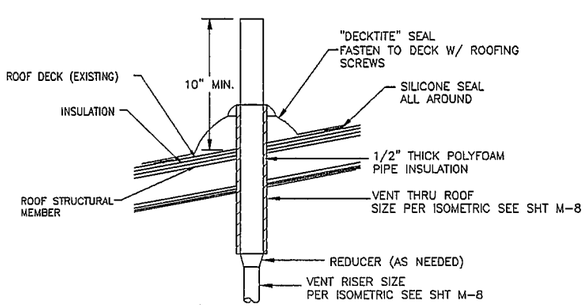

5 / M-9 VENT THROUGH ROOF DETAIL

NTS

RECORD DRAWING CERTIFICATE

THESE DRAWINGS REFLECT RECORDED INFORMATION OBTAINED DURING CONSTRUCTION. INFORMATION PROVIDED HEREIN IS ACCURATE TO THE BEST OF MY KNOWLEDGE.

NAME ____ DATE ____

SCALE: AS SHOWN

BAR IS ONE INCH ON ORIGINAL DRAWING — 0 — 1"

IF NOT ONE INCH ON THIS SHEET ADJUST SCALES ACCORDINGLY

CONSTRUCTION RECORD

FIELD BOOK ____

STAKING ____

FOREMAN ____

AS-BUILT ____

INSPECTOR ____

STATE OF ALASKA 49TH — Lloyd A. Parsons NO. CE 9992 — REGISTERED PROFESSIONAL ENGINEER

WATER AND SEWER 3Y93TEM IMPROVEMENTS

WATER/SEWER HAUL VEHICLES, TRAILERS AND TANKS

CHEFORNAK, ALASKA

CE2 ENGINEERS, INC.

ANCHORAGE, ALASKA

REVISION	BY	DATE

Project No. ____ Date FEB., 1998

Designed LAP

Drawn D-J.W.

Approved CLE

Sheet No. M-9

SHEET 26 OF 39

D:\PROJECTS\D4TSRWA\M-9.DWG

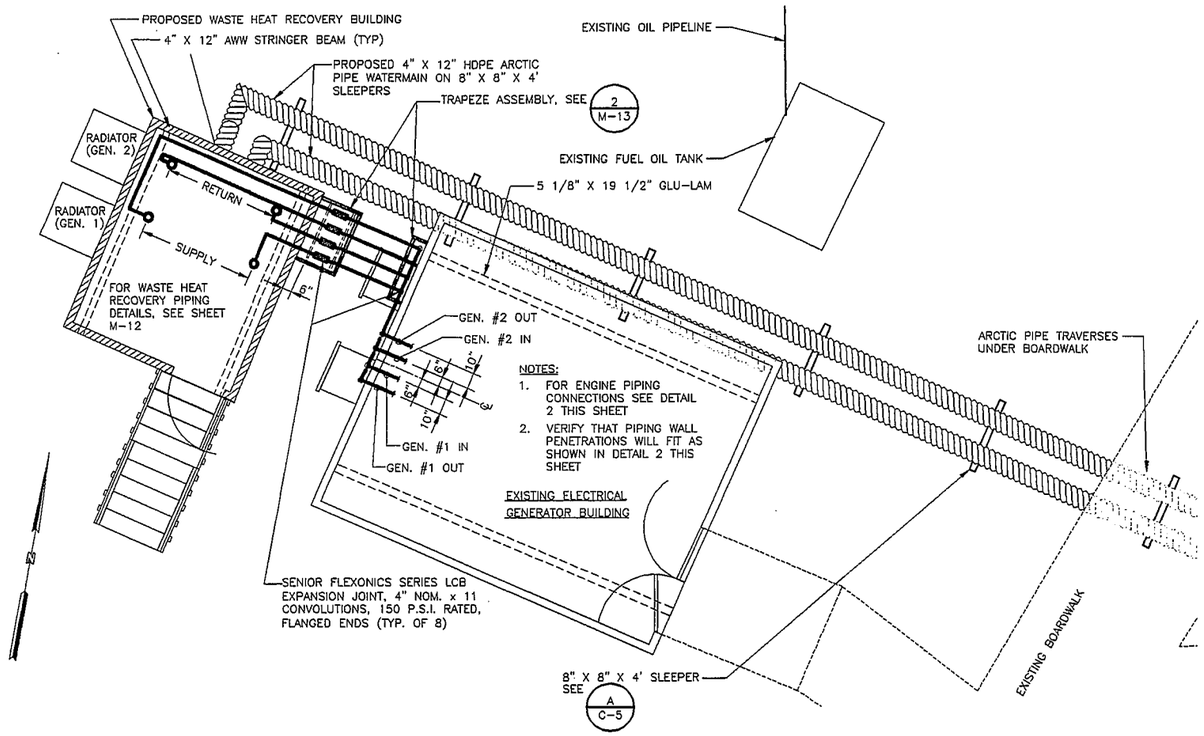

1/M-10 WASTE HEAT RECOVERY BUILDING PLAN AND EQUIPMENT LAYOUT

SCALE: 1/4" = 1'-0"

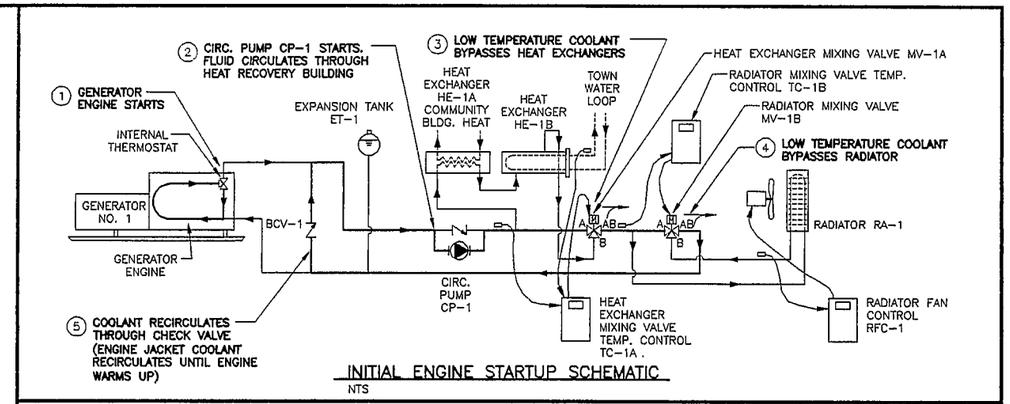

INITIAL ENGINE STARTUP SCHEMATIC

NTS

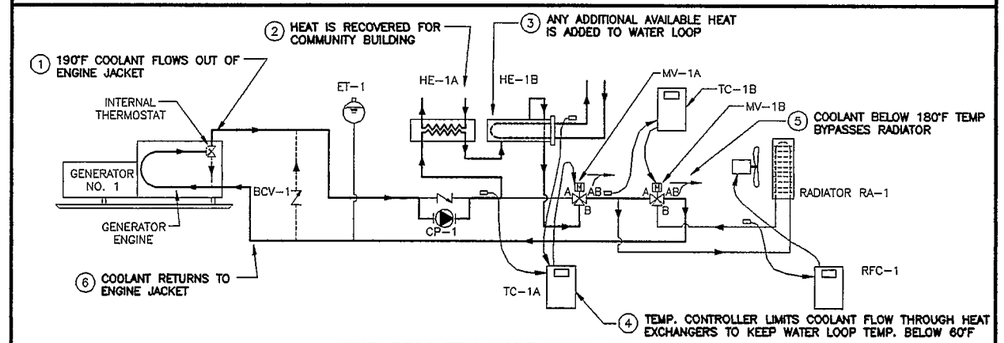

HEAT RECOVERY MODE SCHEMATIC

NTS

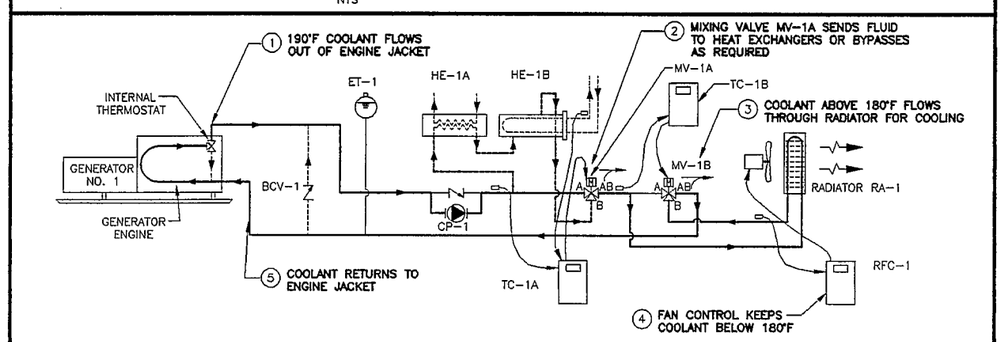

REMOVING EXCESS HEAT THROUGH RADIATOR SCHEMATIC

NTS

SEQUENCE OF OPERATION

NOTE: APPLIES TO GENERATORS NO. 1 AND NO. 2

1. UPON THE STARTUP OF THE GENERATOR, CIRC. PUMP CP-1 STARTS, CAUSING FLUID IN THE ENGINE COOLANT / WASTE HEAT RECOVERY LOOP TO CIRCULATE. WHEN THE ENGINE JACKET COOLANT IS COLD AND NOT CIRCULATING IN THE LOOP, BYPASS CHECK VALVE BCV-1 ALLOWS FLUID TO CIRCULATE THROUGH CIRC. PUMP CP-1, PREVENTING A BLOCKED-OFF SUCTION TO CP-1.
2. WHEN THE TEMPERATURE OF THE ENGINE COOLANT IS ABOVE 185° F, MIXING VALVE MV-1A OPENS (B-AB CONNECTION OPENS), CAUSING ENGINE FLUID TO FLOW THROUGH HEAT EXCHANGERS HE-1A (HEATING COMMUNITY BUILDING) AND HE-1B (HEATING TOWN LOOP WATER). TEMPERATURE CONTROLLER TC-1A LIMITS TOWN LOOP OUTLET TEMPERATURE TO 55° F, AND ALSO LIMITS OPERATION OF HEAT RECOVERY TO ENGINE COOLANT TEMPERATURES OF 185° F OR HIGHER.
3. TEMPERATURE CONTROLLER TC-1B MONITORS RETURN COOLANT TEMPERATURE TO ENGINE. WHEN RETURN TEMPERATURE RISES ABOVE 175° F, MIXING VALVE MV-1B IS OPERATED BY TC-1B AND ENGINE COOLANT IS DIRECTED THROUGH RADIATOR RA-1. WHEN THE ENGINE COOLANT RETURN TEMPERATURE RISES TO 180° F, VARIABLE SPEED RADIATOR FAN CONTROL RFC-1 VARIES THE RADIATOR FAN MOTOR SPEED TO HOLD THE RETURN TEMP. TO 180° F.
4. EXPANSION TANK ET-1 PROVIDES SPACE FOR EXPANSION OF FLUID DUE TO TEMPERATURE FLUCTUATIONS.
5. VALVES ARE LOCATED IN THE PIPING FOR MANUALLY BYPASSING CP-1, HE-1A, HE-1B, MV-1A, AND MV-1B, AND ROUTING FLUID DIRECTLY TO THE REMOTE RADIATOR RA-1 FOR ENGINE COOLING. IN THIS WAY, ENGINE COOLING CAN BE HANDLED WITH ONLY THE ENGINE COOLANT PUMP. THIS OPTION WOULD BE EXERCISED IN THE EVENT OF SYSTEM MAINTENANCE OR THE ISOLATION OF FAILED COMPONENTS.
6. WHENEVER THE GENERATOR IS OFF-LINE, AND OUTSIDE TEMPERATURES ARE BELOW 30° F, CP-1 WILL RUN TO KEEP FLUID WARM BY HEATING FROM FLUID CIRCULATION AND ABSORPTION OF RESIDUAL HEAT FROM WASTE HEAT RECOVERY BUILDING INTERIOR.

3/M-10 WASTE HEAT RECOVERY SCHEMATIC

NTS

NOTE: FOR DETAILS OF PIPING CONNECTIONS BETWEEN GENERATOR BUILDING AND WASTE HEAT RECOVERY BUILDING SEE 1/M-10 4/M-12

LEGEND

- EXISTING PIPE
- EXISTING PIPE TO BE MODIFIED
- NEW PIPE TO BE ADDED

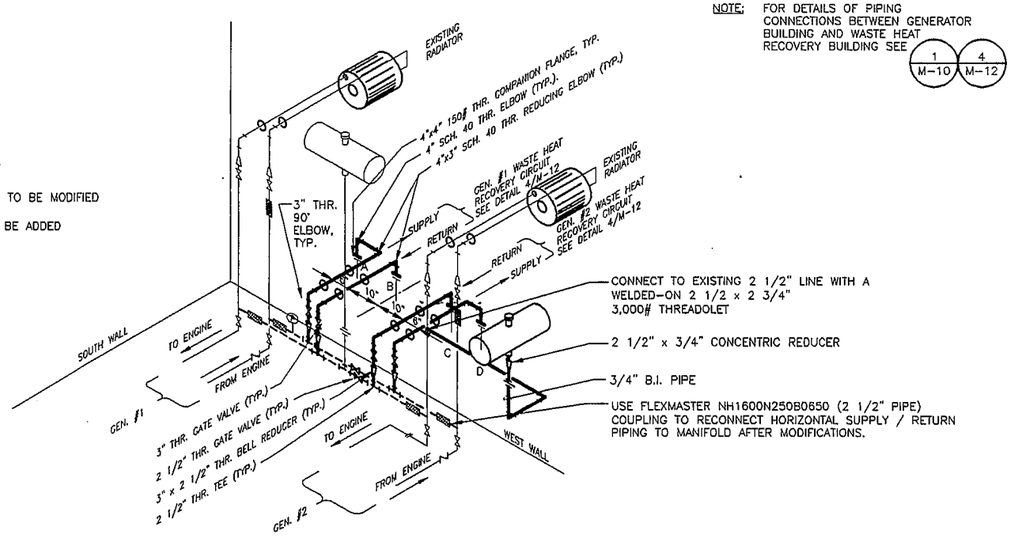

2/M-10 PIPING MODIFICATIONS TO GENERATOR BLDG.

NTS

RECORD DRAWING CERTIFICATE

THESE DRAWINGS REFLECT RECORDED INFORMATION OBTAINED DURING CONSTRUCTION. INFORMATION PROVIDED HEREIN IS ACCURATE TO THE BEST OF MY KNOWLEDGE.

NAME DATE

SCALE: AS SHOWN

BAR IS ONE INCH ON ORIGINAL DRAWING 0 1"

IF NOT ONE INCH ON THIS SHEET, ADJUST SCALES ACCORDINGLY

CONSTRUCTION RECORD

FIELD BOOK

STAKING

FOREMAN

AS-BUILT

INSPECTOR

STATE OF ALASKA 49TH Lloyd A. Parazan NO. CE 9892 REGISTERED PROFESSIONAL ENGINEER

WATER AND SEWER SYSTEM IMPROVEMENTS

WASTE HEAT RECOVERY WATERMAIN EXTENSION

CHEFORNAK, ALASKA

CE2 ENGINEERS, INC.

ANCHORAGE, ALASKA

REVISION	BY	DATE

Project No.

Date MAY 1998

Designed PCW

Drawn D-J.W.

Approved CLE

Sheet No. M-10

SHEET 27 OF 39

D:\PROJECTS\CHE2\SRWA\BSPROJ\M-10

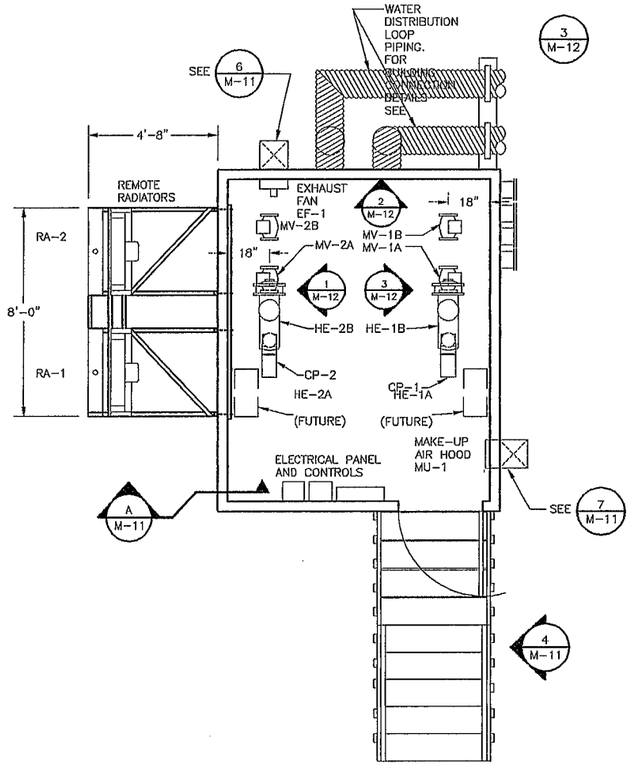

WASTE HEAT RECOVERY BUILDING PLAN AND EQUIPMENT LAYOUT

1 M-11 SCALE: 3/8" = 1'0"

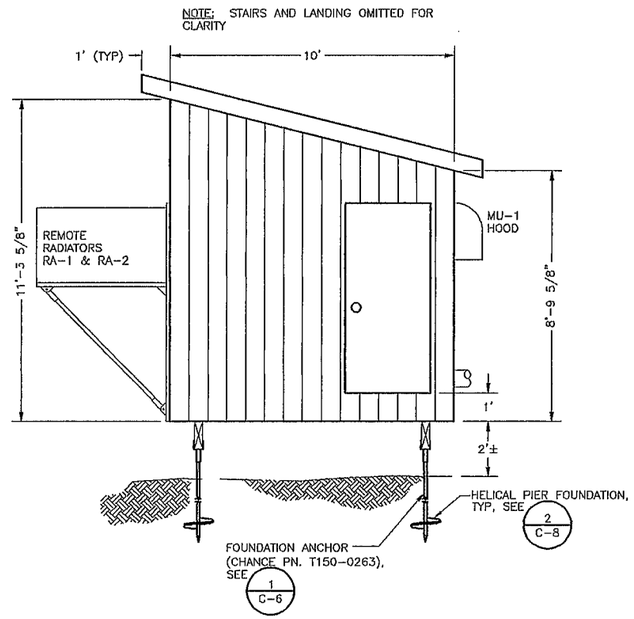

WASTE HEAT RECOVERY BUILDING SOUTH ELEVATION

2 M-11 SCALE: 3/8" = 1'0"

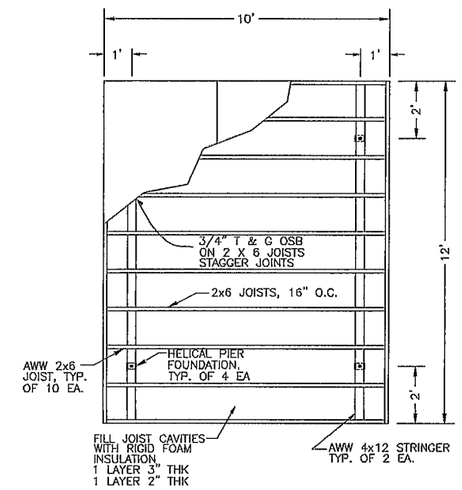

WASTE HEAT RECOVERY BUILDING FLOORING PLAN

3 M-11 SCALE: 3/8" = 1'0"

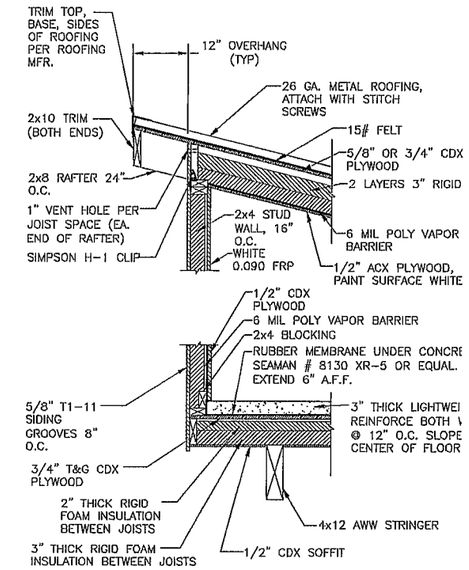

TYPICAL WALL SECTION

A M-11 SCALE: 3/8" = 1'0"

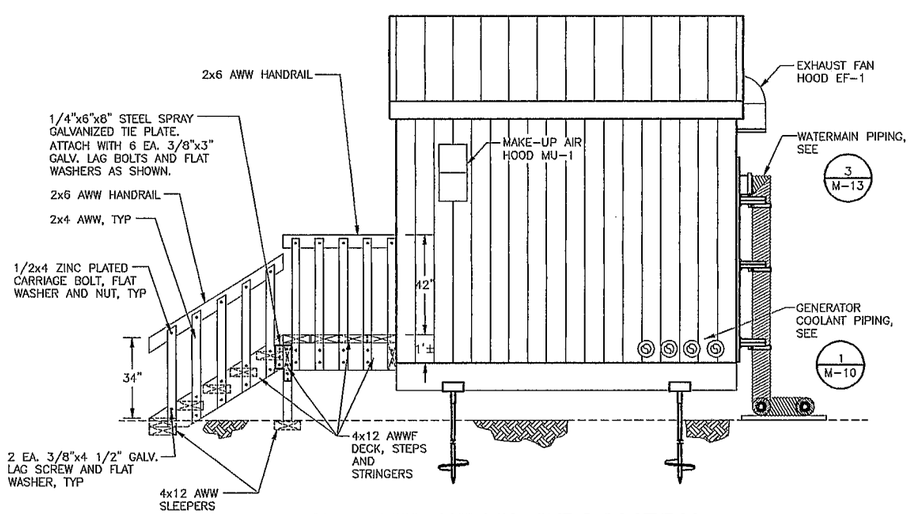

WASTE HEAT RECOVERY BUILDING EAST ELEVATION

4 M-11 SCALE: 3/8" = 1'0"

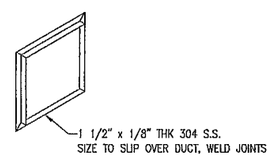

DUCT MOUNT DETAIL

NOT TO SCALE

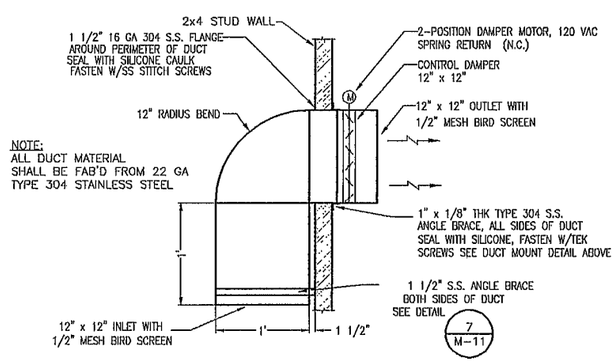

AIR MAKE-UP INLET DETAIL

5 M-11 NTS

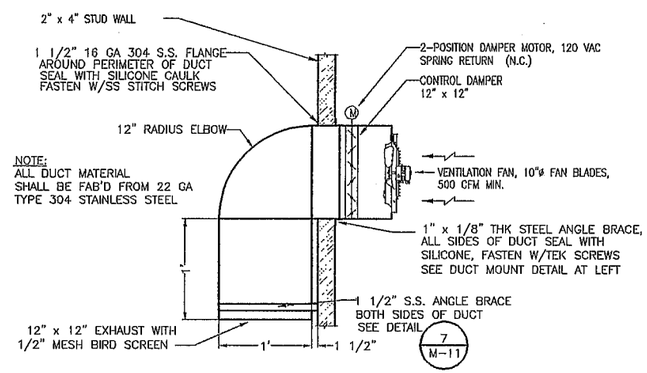

EXHAUST FAN DETAIL

6 M-11 NTS

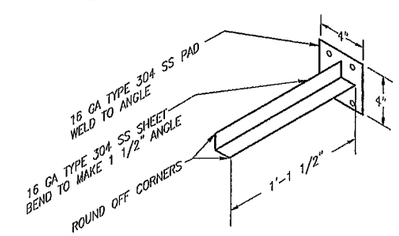

ANGLE BRACKET DETAIL

7 M-11 NTS

RECORD DRAWING CERTIFICATE
THESE DRAWINGS REFLECT RECORDED INFORMATION OBTAINED DURING CONSTRUCTION. INFORMATION PROVIDED HEREIN IS ACCURATE TO THE BEST OF MY KNOWLEDGE.
NAME DATE

SCALE: AS SHOWN
BAR IS ONE INCH ON ORIGINAL DRAWING 0 1"
IF NOT ONE INCH ON THIS SHEET, ADJUST SCALE ACCORDINGLY

CONSTRUCTION RECORD
FIELD BOOK
STAKING
FOREMAN
AS-BUILT
INSPECTOR

STATE OF ALASKA 49TH Lloyd A. Parsons No. CE 9692 REGISTERED PROFESSIONAL ENGINEER

WATER AND SEWER SYSTEM IMPROVEMENTS
WASTE HEAT RECOVERY BUILDING DETAILS
CHEFORNAK, ALASKA

CE2 ENGINEERS, INC.
ANCHORAGE, ALASKA

REVISION	BY	DATE

Project No. ____ Date MAY 1998
Designed PCW
Drawn D-J.W.
Approved CLE

Sheet No. M-11
SHEET 28 OF 39

B:\PROJECTS\CHEFORNAK\M-11.DWG

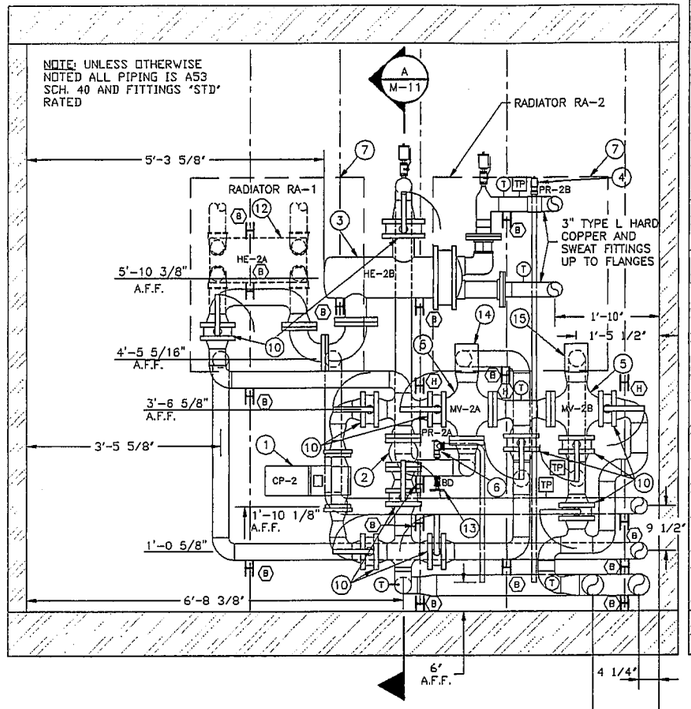

1 M-12 **PIPING – WEST ELEVATION**
SCALE: 3/4" = 1'-0"

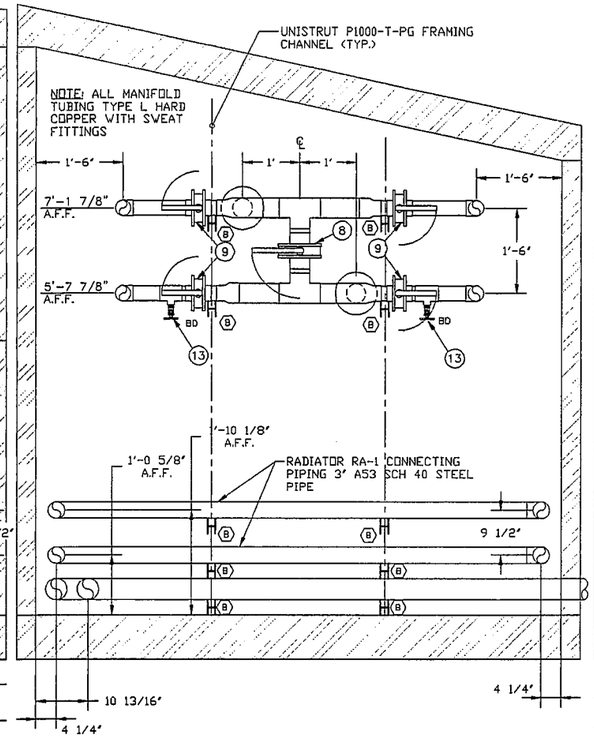

2 M-12 **PIPING – NORTH ELEVATION**
SCALE: 3/4" = 1'-0"

NOTES:
1. FOR PIPE SUPPORT DETAILS SEE 4/M-13
2. (B) DENOTES PIPE SUPPORT BEARING ASSEMBLY
(H) DENOTES PIPE SUPPORT HANGING ASSEMBLY

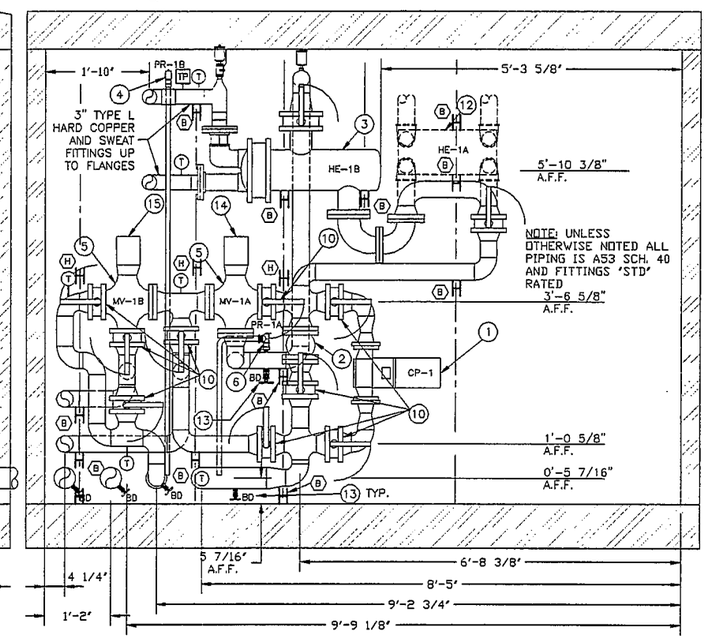

3 M-12 **PIPING – EAST ELEVATION**
SCALE: 3/4" = 1'-0"

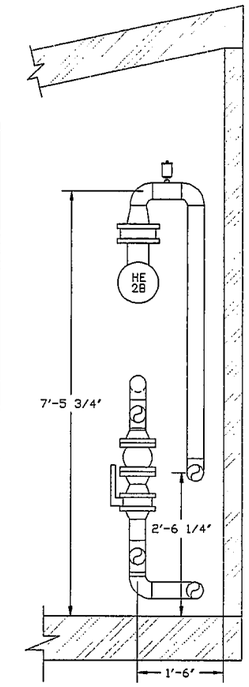

A M-12 **HE-2B SECTION**
SCALE: 3/4" = 1'-0"

BILL OF MATERIALS

ITEM NO.	DESCRIPTION
1	CIRCULATOR PUMP, GRUNDFOS TP 50-80, 104 GPM @ 18.7 FT TDH, 3/4 HP TEFC MOTOR, 460V, 3 HP, 2" FLANGED CONNECTIONS.
2	SILENT CHECK VALVE, GLOBE STYLE, 125 43 RATED, METRAFLEX NO. 903, 3" FLANGED CONNECTION.
3	HEAT EXCHANGER, SHELL & TUBE, DOUBLE WALLED, 2-PASS, 4" FLANGED SHELL CONNECTIONS, 3" FPT TUBE CONNECTIONS, TACO MODEL G8204-4LD WITH 2 EA. MFR SUPPLIED MOUNTING SADDLE.
4	PRESSURE RELIEF VALVE, 30 P.S.I. SETTING, 925,000 BTU/HR, 3/4" FPT INLETx1" FPT OUTLET, ASME RATED, WATTS #740 OR EQUAL.
5	3-WAY MIXING VALVE, 3" FLANGED CONNECTIONS, 125 LB RATING, CV=100, HONEYWELL V5013B1011 OR EQUAL.
6	PRESSURE RELIEF VALVE, 100 P.S.I. SETTING, 3/4 FPT INLET & OUTLET, ASME RATED, BRONZE BODY, WATTS #174A OR EQUAL.
7	REMOK RADIATOR, RATED 8000 BTU/MIN, 95 GPM INLET TEMP 195°F, OUTLET TEMP 185°F, PRESSURE LOSS 0.9 PSIG, 50% ETHYLENE GLYCOL, 3" FPT CONNECTIONS, 2HP 1750 RPM, 460V, 3 HP. MOTOR, SUITABLE FOR VFD DRIVE. YOUNG STANDARD MWC 46D2FR RADIATOR.
8	BUTTERFLY VALVE, LUG BODY PATTERN, APPROVED FOR POTABLE WATER, 4" SIZE, 200 P.S.I., HAND LEVER OPERATOR, DEMCO NO. 22122-5124031 OR EQUAL.
9	BUTTERFLY VALVE, LUG BODY PATTERN, APPROVED FOR POTABLE WATER, 3" SIZE, 200 P.S.I., HAND LEVER OPERATOR DEMCO NO. 22121-5124351 OR EQUAL.
10	BUTTERFLY VALVES, UNLESS OTHERWISE CALLED OUT, LUG BODY PATTERN, SUITABLE FOR ETHYLENE GLYCOL, ALUM.-BRONZE DISC, EPT SEAL, MAX TEMP. 235°F, 200 P.S.I. COLD WATER PRESSURE. 3" VALVE: DEMCO NO. 22121-5124351 OR EQUAL 4" VALVE: DEMCO NO. 22122-5124351 OR EQUAL
11	FLEXIBLE BELLOWS COUPLING FOR ENGINE JACKET COOLING FLUID, 4" FLANGED CONNECTIONS, STAINLESS STEEL BRAID AND BELLOWS, SENIOR FLEXONICS SERIES LCP EXPANSION JOINT, 4" NOM. x 11 CONVOLUTIONS, 150 P.S.I. RATED.
12	BRAZED PLATE HEAT EXCHANGER, AMERIDEX TYPE SL70TK-JJ-68, 1 1/2" MPT CONNECTIONS (FUTURE).
13	BOILER DRAIN: 3/4 MPTxHOSE, ATTACHED TO PIPING WITH WELDED ON 3/4" THREADOLET.
14	MOTORIZED VALVE ACTUATOR, SPRING RETURN VALVE STEM RETRACTED, HONEYWELL NO. ML7425B3012 W/ NO. T775E1015 CONTROLLER.
15	MOTORIZED VALVE ACTUATOR, SPRING RETURN VALVE STEM EXTENDED, HONEYWELL NO. ML7425B3013 W/ NO. T775E1015 CONTROLLER.
16	AUTOMATIC AIR VENT, FLOAT TYPE, 1/4" MPT, 150 P.S.I. MAX. WORKING PRESSURE, 240°F MAX. WORKING TEMPERATURE, TACO NO. 426.
17	BALL VALVE, 1/2" NPT, STOCKHAM NO. S214-BR-T-TN 400 BV SE OR EQUAL.
18	TEMPERATURE PROBE, HONEYWELL NO. 193987GA PLATINUM LINEAR RESISTANCE TYPE SENSOR
19	TEMPERATURE GAUGE, LIQUID TYPE, TRERICE NO. L80742, 4 1/2" DIAL, 30°F TO 240°F RANGE, NO. 4-3D1 BULB, NO. 7-3D2 BRASS THERMOWELL, 1/2" NPT.

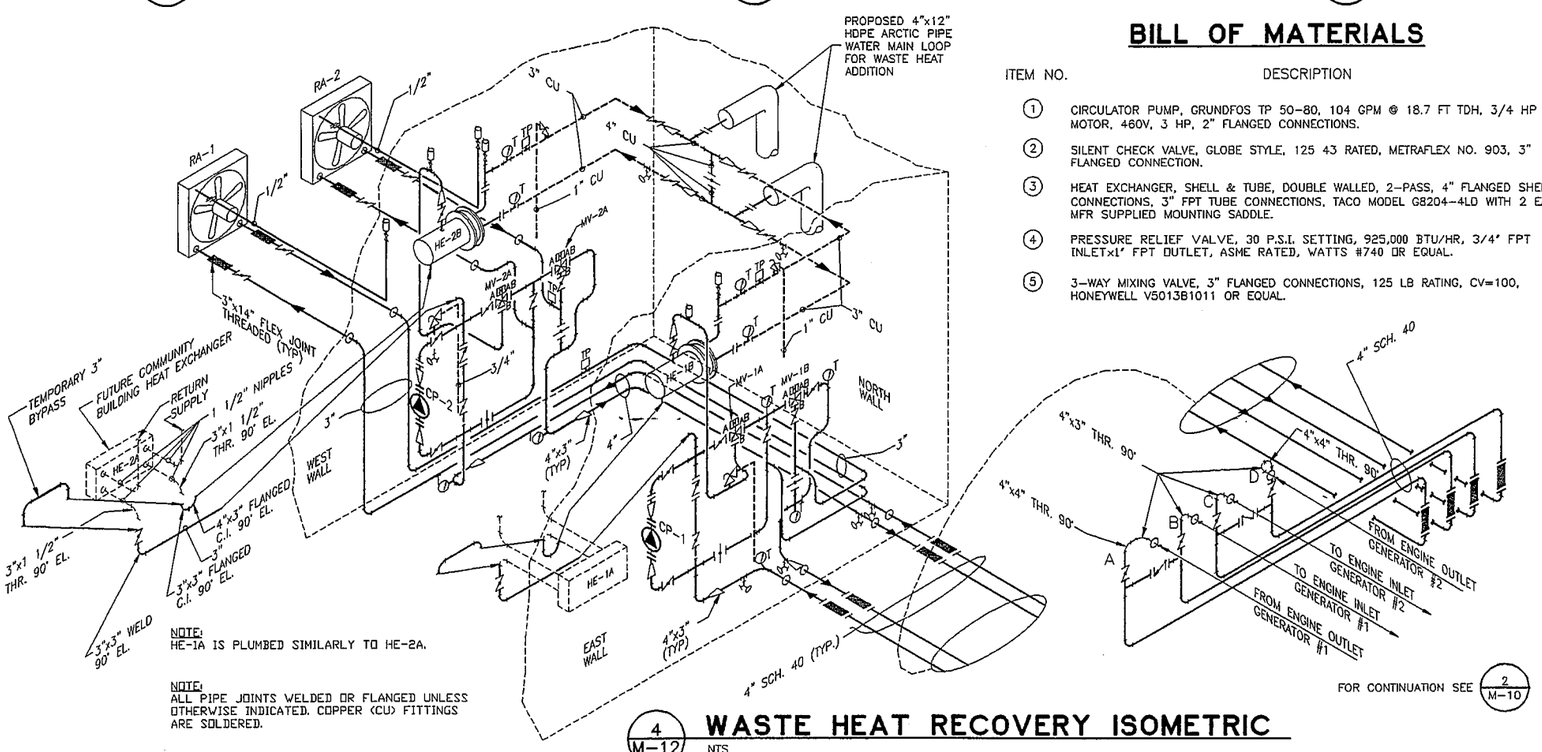

NOTE:
HE-1A IS PLUMBED SIMILARLY TO HE-2A.

NOTE:
ALL PIPE JOINTS WELDED OR FLANGED UNLESS OTHERWISE INDICATED. COPPER (CU) FITTINGS ARE SOLDERED.

4 M-12 **WASTE HEAT RECOVERY ISOMETRIC**
NTS

RECORD DRAWING CERTIFICATE
THESE DRAWINGS REFLECT RECORDED INFORMATION OBTAINED DURING CONSTRUCTION. INFORMATION PROVIDED HEREIN IS ACCURATE TO THE BEST OF MY KNOWLEDGE.
NAME DATE

SCALE: AS NOTED
BAR IS ONE INCH ON ORIGINAL DRAWING 0 1"
IF NOT ONE INCH ON THIS SHEET, ADJUST SCALES ACCORDINGLY

CONSTRUCTION RECORD
FIELD BOOK
STAKING
FOREMAN
AS-BUILT
INSPECTOR

STATE OF ALASKA 49TH LLOYD A. FERGUSON REGISTERED PROFESSIONAL ENGINEER NO. CE 9692

WATER AND SEWER SYSTEM IMPROVEMENTS
WASTE HEAT RECOVERY PIPING DETAILS
CHEFORNAK, ALASKA

CE2 ENGINEERS, INC.
ANCHORAGE, ALASKA

REVISION	BY	DATE

Project No. ____ Date MAY 1998
Designed PCW
Drawn D-J.W.
Approved C.I.E.

Sheet No. M-12
SHEET 29 OF 39

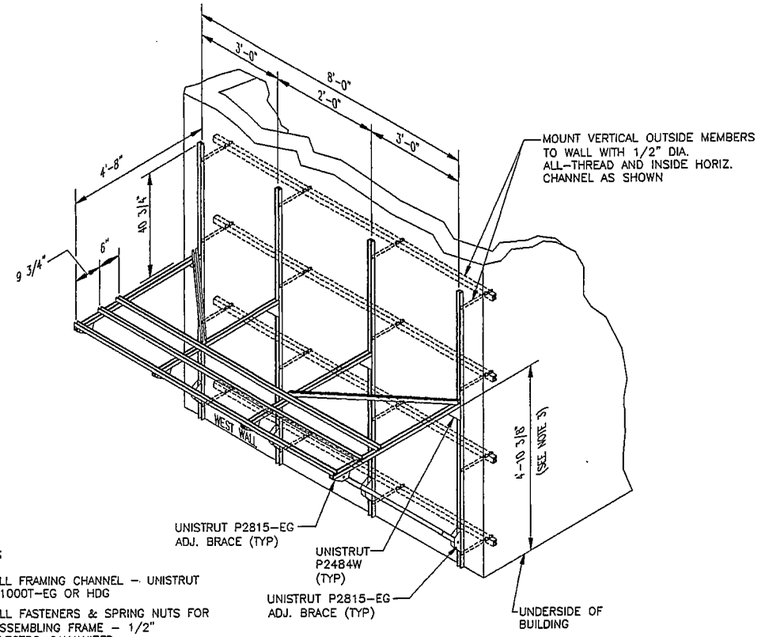

NOTES:

1. ALL FRAMING CHANNEL – UNISTRUT P1000T-EG OR HDG
2. ALL FASTENERS & SPRING NUTS FOR ASSEMBLING FRAME – 1/2" ELECTRO-GALVANIZED
3. MATCH HEIGHT OF RADIATOR FRAME TO FIT PIPING PENETRATIONS TO RADIATORS. SEE 1/M-12
4. FASTEN RADIATORS TO FRAME WITH 1/2"-N.C. MACHINE BOLTS, FLAT WASHERS AND SPRING NUTS

1/M-13 RADIATOR MOUNTING FRAME DETAILS

NTS

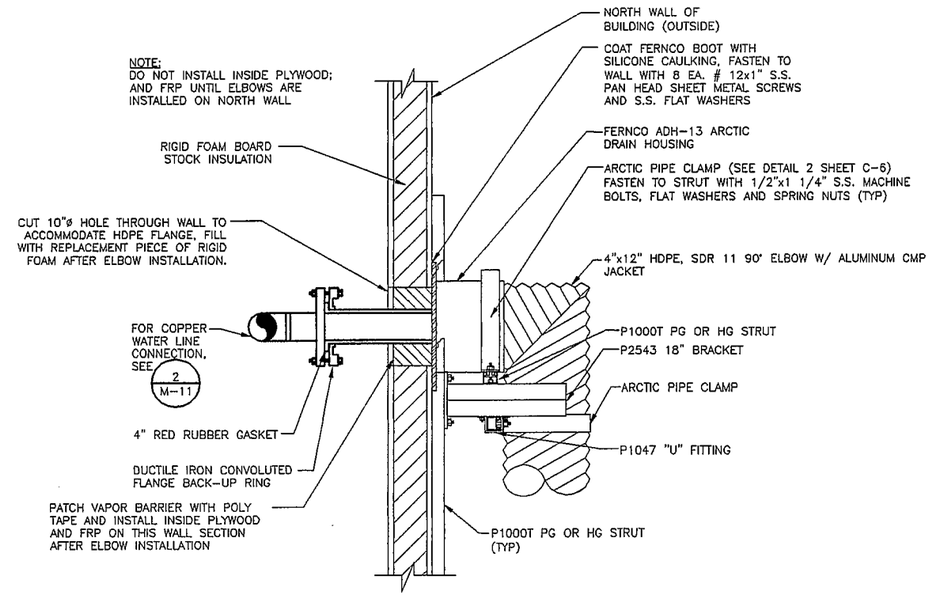

5/M-13 ARCTIC PIPE RESTRAINT & SUPPORT DETAIL

NTS

NOTE:
CONNECT ALL COMPONENTS TOGETHER WITH 1/2" GALV. MACH. BOLTS AND SPRING NUTS (UNISTRUT P1010).

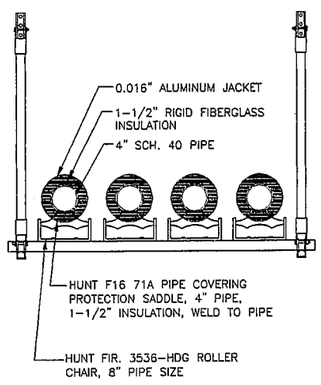

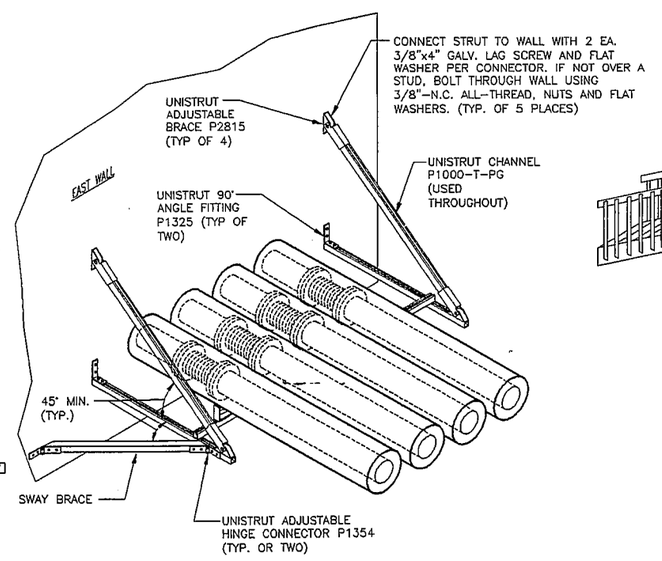

2/M-13 TRAPEZE ASSEMBLY DETAIL

NTS

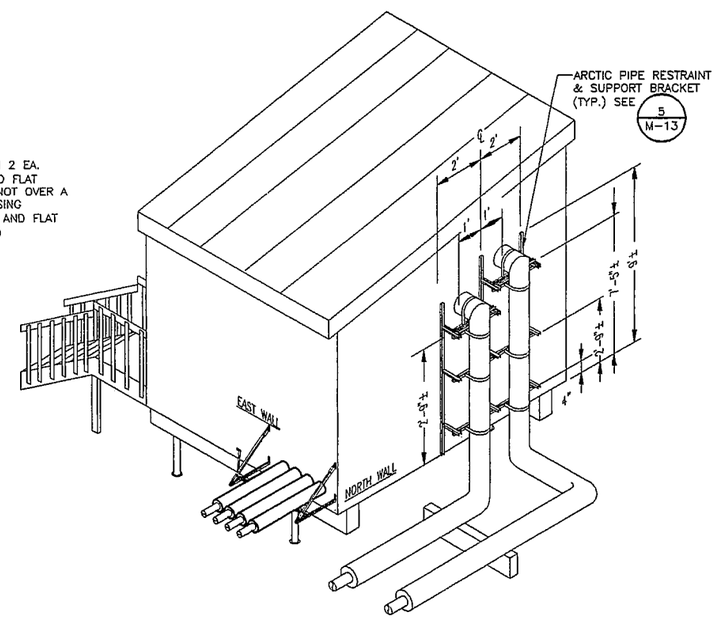

PIPING CONNECTION PICTORIAL

3/M-13 WATERMAIN CONNECTION DETAILS

NTS

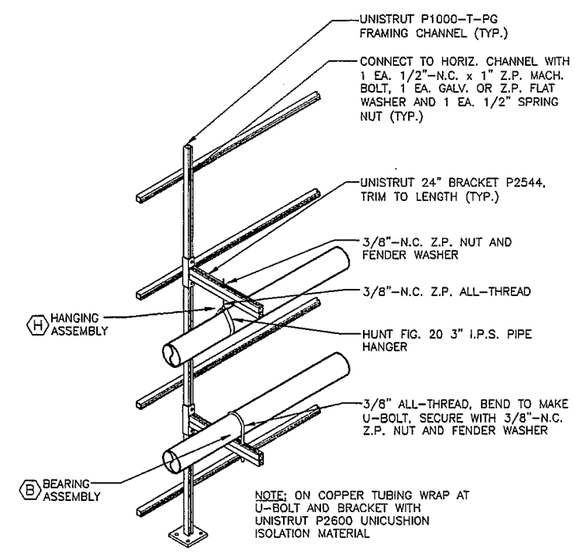

NOTE: ON COPPER TUBING WRAP AT U-BOLT AND BRACKET WITH UNISTRUT P2600 UNICUSHION ISOLATION MATERIAL

4/M-13 TYPICAL PIPE SUPPORT SYSTEMS

NTS

RECORD DRAWING CERTIFICATE

THESE DRAWINGS REFLECT RECORDED INFORMATION OBTAINED DURING CONSTRUCTION. INFORMATION PROVIDED HEREIN IS ACCURATE TO THE BEST OF MY KNOWLEDGE.

NAME DATE

SCALE: AS SHOWN

BAR IS ONE INCH ON ORIGINAL DRAWING 0 1"

IF NOT ONE INCH ON THIS SHEET, ADJUST SCALES ACCORDINGLY

CONSTRUCTION RECORD

FIELD BOOK

STAKING

FOREMAN

AS-BUILT

INSPECTOR

STATE OF ALASKA 49TH Lloyd A. Ferguson NO. CE 9492 REGISTERED PROFESSIONAL ENGINEER

WATER AND SEWER SYSTEM IMPROVEMENTS

BOARDWALK AND PIPELINE SUPPORT DETAILS

CHEFORNAK, ALASKA

CE2 ENGINEERS, INC.

ANCHORAGE, ALASKA

REVISION	BY	DATE

Project No. ____ Date MAY 1998 Designed LAP Drawn D-J.W. Approved CLE

Sheet No. M-13

SHEET 30 OF 39

D:\PROJECTS\CHEFORNAK\M-13.DWG

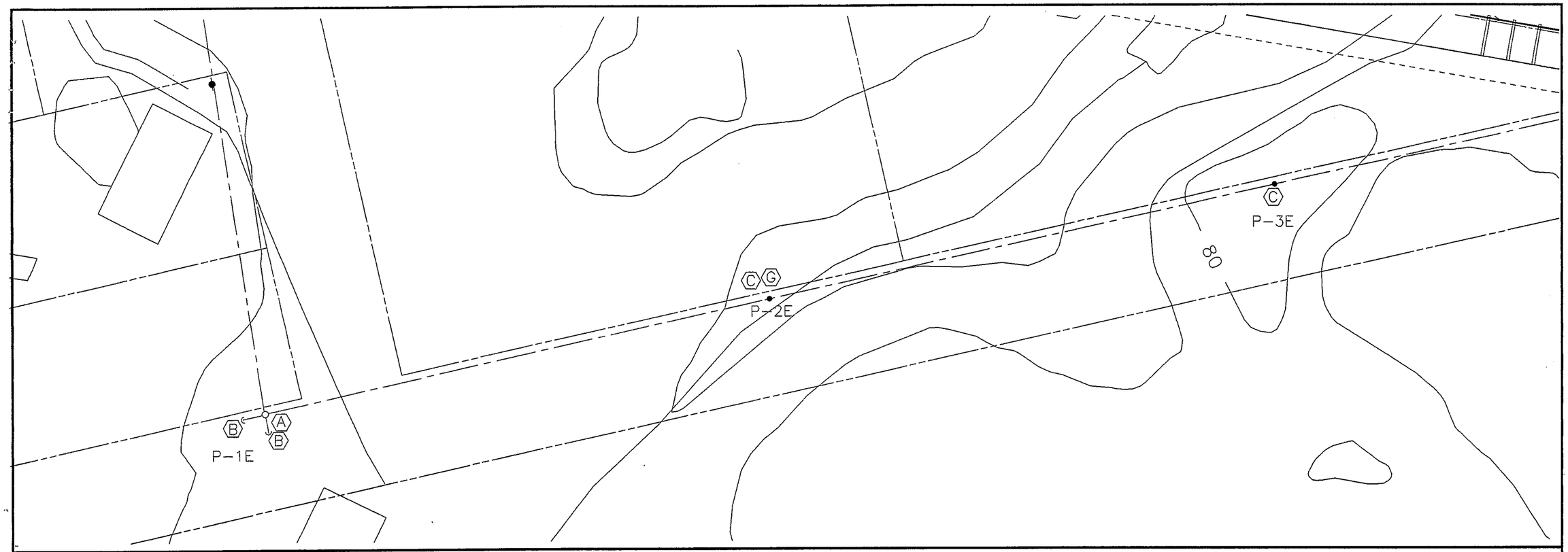

LEGEND

— — —	OVERHEAD DISTRIBUTION, 7200V, 2 WIRE, AWG 2, ACSR
○	POLE, EXISTING
●	POLE, NEW
⟵	DOWN GUY
▽	TRANSFORMER, 25KVA, 7200V : 120/240V
(B)	INSTALLATION DETAIL, SEE SHEET E-PL-2
P-1E	POLE NUMBER

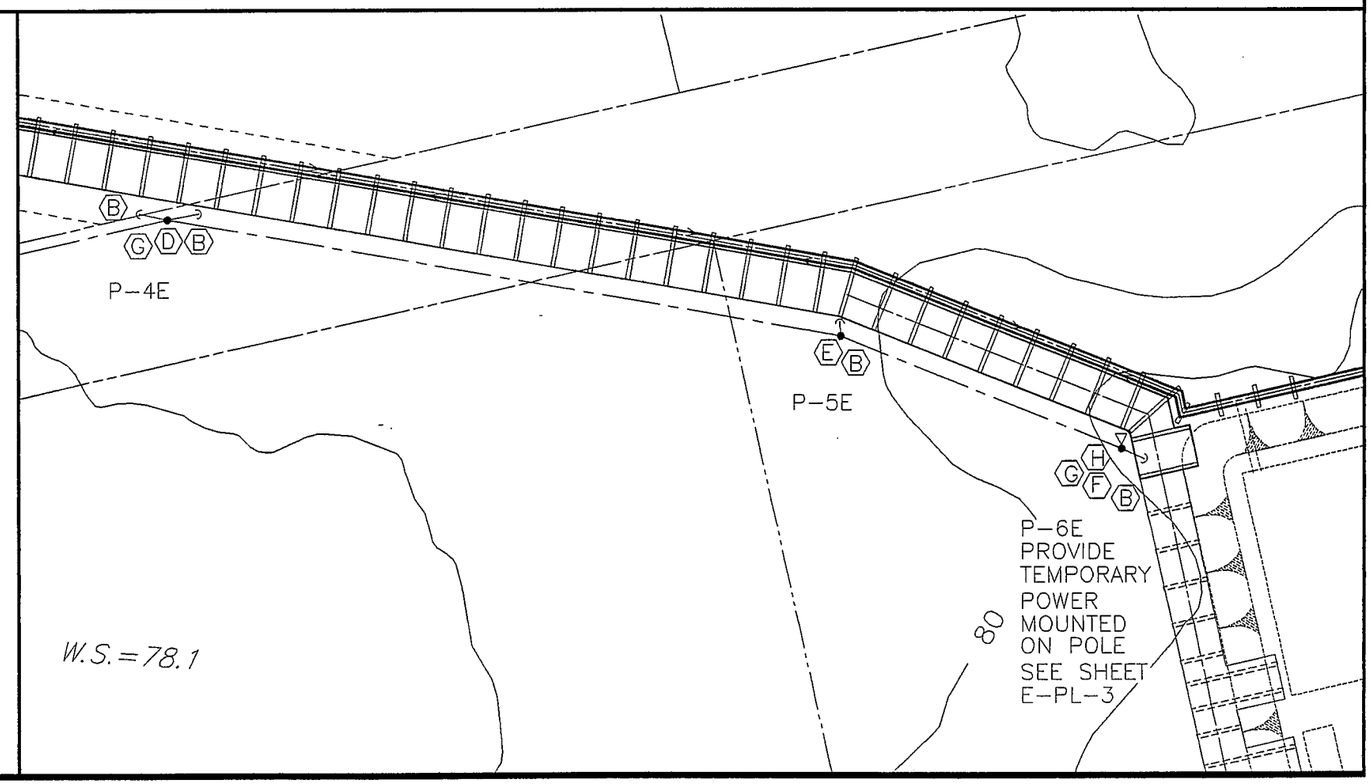

RECORD DRAWING CERTIFICATE

THESE DRAWINGS REFLECT RECORDED INFORMATION OBTAINED DURING CONSTRUCTION. INFORMATION PROVIDED HEREIN IS ACCURATE TO THE BEST OF MY KNOWLEDGE.

NAME DATE

SCALE: 1" = 40'

BAR IS ONE INCH ON ORIGINAL DRAWING
0 1"
IF NOT ONE INCH ON THIS SHEET, ADJUST SCALES ACCORDINGLY

CONSTRUCTION RECORD
FIELD BOOK
STAKING
FOREMAN
AS-BUILT
INSPECTOR

STATE OF ALASKA 4916 Thomas W. Longstaff EE-4923 REGISTERED PROFESSIONAL ENGINEER

WATER AND SEWER SYSTEM IMPROVEMENTS

OVERHEAD POWER DISTRIBUTION LINE EXTENSION

CHEFORNAK, ALASKA

CE2 ENGINEERS, INC.
ANCHORAGE, ALASKA

REVISION	BY	DATE

Project No.
Date
Designed TWL
Drawn DAH
Approved TWL

Sheet No. E-PL-1
SHEET 31 OF 39

d:\PROJECTS\Chefornak\E-PL-1.DWG

A

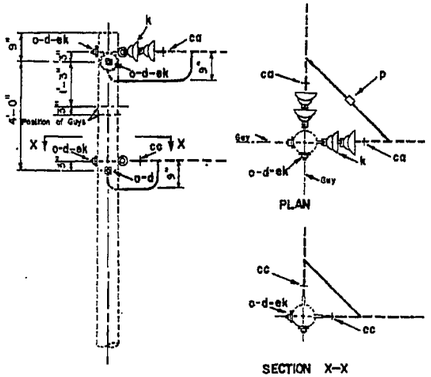

NOTE: Items ca and cc are shown on assembly drawings M42-3, M42-11, M42-13 and M42-21

ITEM	NO.	MATERIAL	ITEM	NO.	MATERIAL
d	4	Washer, 2 1/4"x2 1/4"x3/16" (3/16" hole	ca	2	Deadend assembly, primary
k	4	Insulator, suspension	cc	2	Deadend assembly, neutral
o	4	Bolt, eye, 5/8" x req'd. length	ek		Locknuts, as required
p		Connectors, as required			

Item	McGraw-Edison	Item	McGraw-Edison
i	DF2WS		
p	DF2C Series		

7.2/12.5 KV PRIMARY, I-PHASE
60° to 90° ANGLE

Apr., 1983 — A4

B

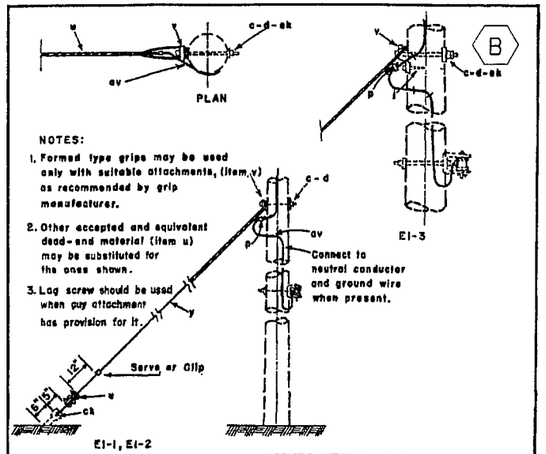

NOTES:

1. Formed type grips may be used only with suitable attachments, (item v) as recommended by grip manufacturer.
2. Other accepted and equivalent dead-end material (item u) may be substituted for the ones shown.
3. Lag screw should be used when guy attachment has provision for it.

See guide drawings M30-1 and M30-2

ITEM	MATERIAL	ASSEMBLY UNIT E1-1 No. REQ'D.	E1-2 No. REQ'D.	E1-3 No. REQ'D.
c	Bolt, machine, 5/8" x required length	1	1	1
d	Washer, curved	1-2 1/4"x2 1/4"	1-3"x3"	1-4"x4"
j	Screw, lag, 1/2" x 4"			1
p	Connectors	as req'd	as req'd	as req'd
u	Deadend for guy strand	2	2	2
v,	Guy attachment (rating)	1-(5200 lbs.)	1-(5200 lbs.)	1-(8500 lbs)
y	Guy wire, S.M., 7 strand req'd length by	1/4"	3/8"	7/16"
av	Jumper, No. 4 stranded Al. alloy or equiv.	req'd length	req'd length	req'd length
ck	Clamp, anchor rod bonding	1	1	1
ek	Locknuts, as required			

Item	McGraw-Edison	Item	McGraw-Edison
u	[illegible]		DG2WS
	DF2WS		DG2WS
j	DF4WS	c,	DA3BT or DA3BP
i	DF2WS		DF4WS

7.2/12.5 kV
SINGLE DOWN GUY, THROUGH BOLT TYPE

Apr., 1983 — E1-1, E1-2, E1-3

C

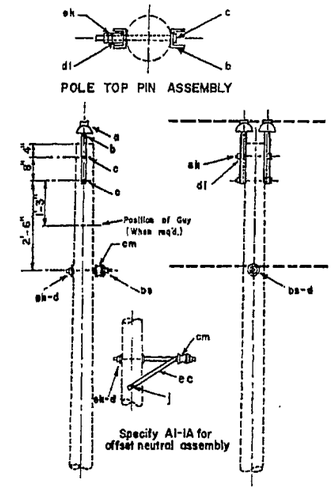

ITEM	NO.	MATERIAL	ITEM	NO.	MATERIAL
a	2	Insulator, pin type	bs	1	Bolt, single upset, (A1-1 only)
b	2	Pin, pole top, 20"	dl	2	Pipe spacer, 3/4" dia. x 1 1/2"
c	2	Bolt, machine, 5/8" x req'd. length	j	2	Screw, lag, 1/2"x4", (A1-1A only)
d	1	Washer, 2 1/4" x 2 1/4" x 3/16", (3/16" hole	ec	1	Bracket, offset, neutral, (A1-1A only)
ek		Locknuts, as required			
cm	1	Spool insulator			

Item	McGraw-Edison	Item	McGraw-Edison
a	NP5B	ec	DC2E Series
b	DP1BP6	cm	DE453
c	DF3B Series	jl	DM3P2
d	DF2WS	ec	DC1N1
i	DF4WS	ek	DF2N4

7.2/12.5 kV PRIMARY, I-PHASE,
DOUBLE PRIMARY SUPPORT
DESIGN LIMITS
Max. transverse load: 500 lbs. per conductor
Max. line angle within load limits: 5°

Apr., 1983 — A1-1, A1-1A

D

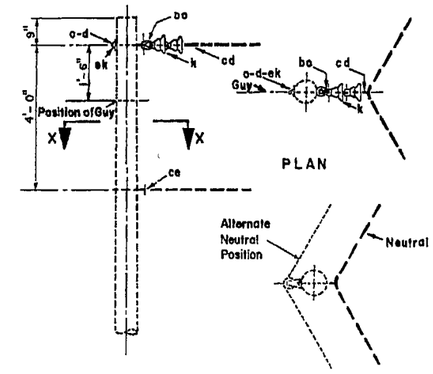

Note: Items cd and ce are shown on assembly drawings M41-1 and M41-10

ITEM	NO.	MATERIAL	ITEM	NO.	MATERIAL
			ba	1	Shackle, anchor
d	1	Washer, 2 1/4" x 2 1/4" x 3/16", 13/16" hole	cd	1	Angle assembly, primary
k	2	Insulator, suspension	ce	1	Angle assembly, neutral
o	1	Bolt, eye, 5/8" x req'd length	ek		Locknut, as required

Item	McGraw-Edison	Item	McGraw-Edison
i	DF2WS		[illegible]
	[illegible]		[illegible]

7.2/12.5 kV PRIMARY, I-PHASE
DESIGN LIMITS
Max. transverse load: 4000 lbs. per conductor
Angle: 20° - 60°

Apr., 1983 — A3

E

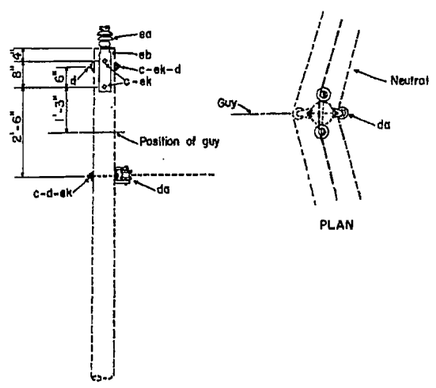

ITEM	NO.	MATERIAL	ITEM	NO.	MATERIAL
c	4	Bolt, machine, 5/8" x required length	ea	2	Insulator, post type
d	3	Washer, square, 2 1/4"	eb	2	Bracket, pole top
da	1	Bracket, insulated	ek		Locknuts, as required

Item	McGraw-Edison	Item	McGraw-Edison
[illegible]	DF3B Series	eb	DC1B1
d	DF2WS	ek	DF2N Series
da	DC2C1		

7.2/12.5 kV, I-PHASE
DOUBLE PRIMARY SUPPORT
DESIGN LIMITS
Max. transverse load: 1500 lbs. per conductor
Max. line angle within load limits: 20°

Apr., 1983 — A2P

F

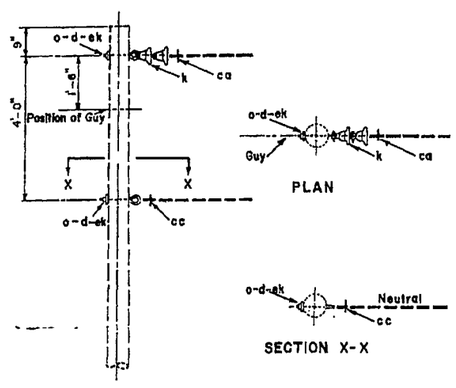

Note: Items ca and cc are shown on assembly drawings M42-3, M42-11, M42-13 and M42-21

ITEM	NO.	MATERIAL	ITEM	NO.	MATERIAL
d	2	Washer, square, 2 1/4"	cc	1	Deadend assembly, neutral
k	2	Insulator, suspension	ek		Locknuts, as required
o	2	Bolt, eye, 5/8" x req'd. length			
ca	1	Deadend assembly, primary			

Item	McGraw-Edison	Item	McGraw-Edison
d	DF2WS	cc	DF2N Series
o	DF4WS		

7.2/12.5 kv PRIMARY, I-PHASE
DEADEND (SINGLE)

Apr., 1983 — A5

G

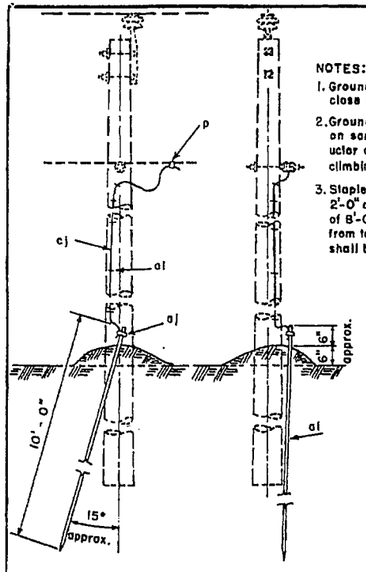

NOTES:

1. Ground rod to be driven as close to pole as practical.
2. Ground wire to be located on same side as neutral conductor and in quadrant opposite climbing space or pole top pin.
3. Staples on ground wire shall be 2'-0" apart except for a distance of 8'-0" above ground and 8'-0" from top of pole where they shall be 6" apart.

ITEM	NO.	MATERIAL	ITEM	NO.	MATERIAL
p		Connectors, as required	al		Staples, ground wire, as required
al	1	Rod, ground, galv. steel, 10'-0" x 5/8" dia.,	cj		Ground wire, No. 4 AWG aluminum,
		minimum			as required
aj	1	Clamp, ground rod, tamper proof			

Item	McGraw-Edison	Item	McGraw-Edison
[illegible]	[illegible]		

GROUNDING ASSEMBLY - GROUND ROD TYPE

Apr., 1969 — VM2-11A

H

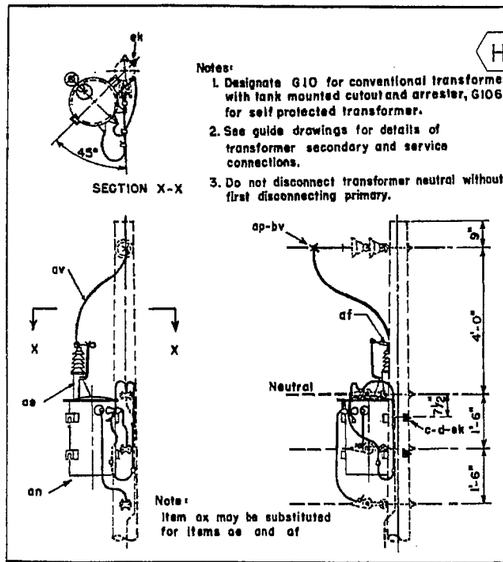

Notes:

1. Designate G10 for conventional transformer with tank mounted cutout and arrester, G106 for self protected transformer.
2. See guide drawings for details of transformer secondary and service connections.
3. Do not disconnect transformer neutral without first disconnecting primary.

Note: Item ax may be substituted for items ae and af

ITEM	NO.	MATERIAL	ITEM	NO.	MATERIAL
c	2	Bolt, machine, 5/8" x req'd length	ae	1	Transformer
d	2	Washer, 2 1/4" x 2 1/4" x 3/16", 13/16" hole	ap	1	Clamp, hot line, top assembly
p		Connectors, as required	av		Jumpers, stranded, as required
ae	1	Surge arrester (G10 only)	bv	1	Rods, armor
af	1	Cutout, fuse, open link (G10 only)	ek		Locknuts, as req'd

Item	McGraw-Edison	Item	McGraw-Edison
[illegible]	DF2WS Series	[illegible]	[illegible]
[illegible]	DF2WS		[illegible]
[illegible]	DF3W Series		[illegible]

7.2/12.5 kV
I-PHASE TRANSFORMER
AT DEADEND

Apr., 1983 — G10-, G66-, G106-

RECORD DRAWING CERTIFICATE
THESE DRAWINGS REFLECT RECORDED INFORMATION OBTAINED DURING CONSTRUCTION. INFORMATION PROVIDED HEREIN IS ACCURATE TO THE BEST OF MY KNOWLEDGE.
NAME — DATE

SCALE: NTS
BAR IS ONE INCH ON ORIGINAL DRAWING
IF NOT ONE INCH ON THIS SHEET, ADJUST SCALES ACCORDINGLY

CONSTRUCTION RECORD
FIELD BOOK
STAKING
FOREMAN
AS-BUILT
INSPECTOR

STATE OF ALASKA — 49TH — REGISTERED PROFESSIONAL ENGINEER

WATER AND SEWER SYSTEM IMPROVEMENTS

OVERHEAD POWER DISTRIBUTION LINE DETAILS

CHEFORNAK, ALASKA

CE2 ENGINEERS, INC.
ANCHORAGE, ALASKA

REVISION	BY	DATE

Project No. ____ Date 05/20/98 Designed TWL Drawn DAH Approved TWL

Sheet No. E-PL-2
SHEET 32 OF 39

D:\PROJECTS\CHEFORNAK\E-PL-1.DWG

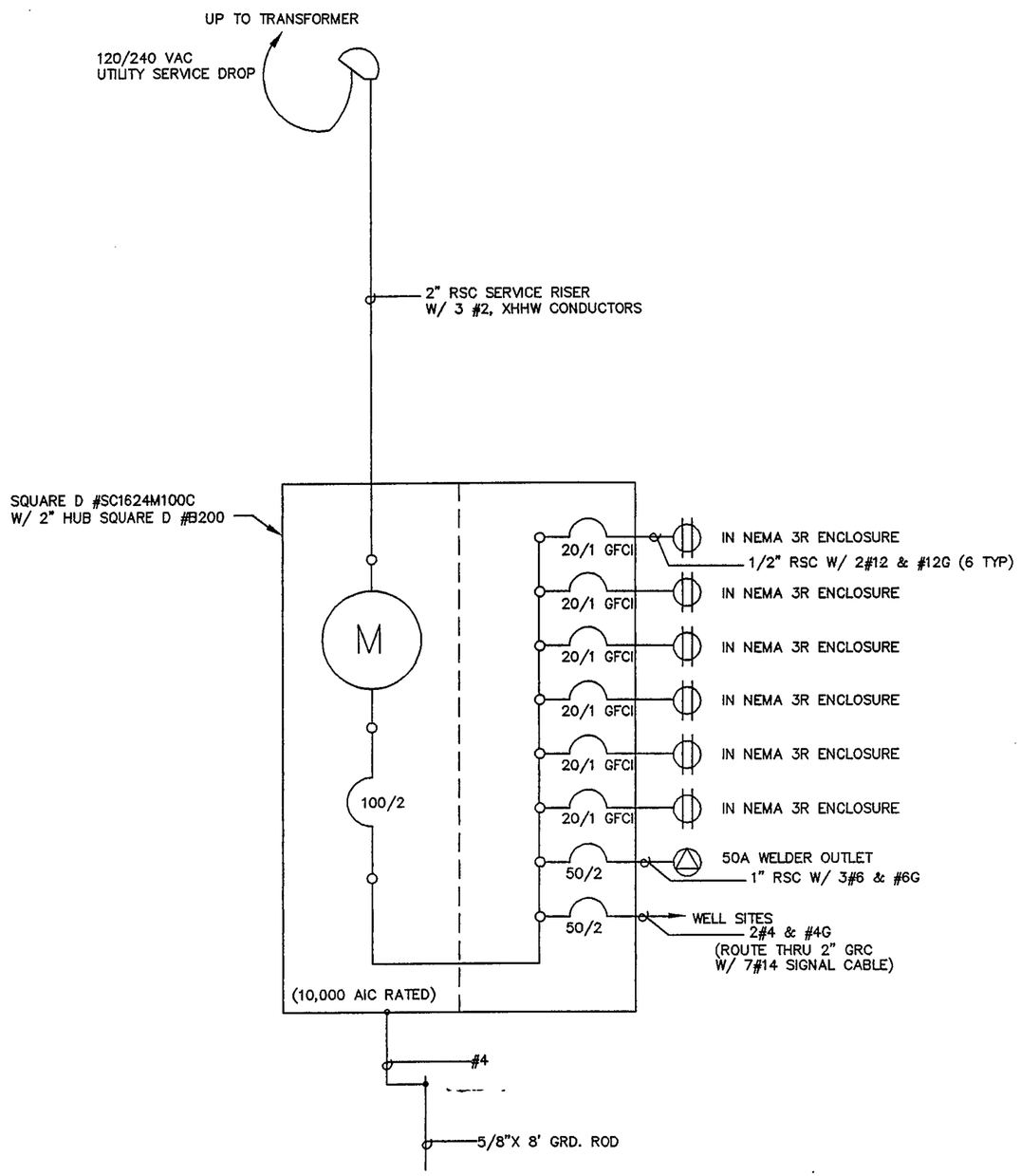

TEMP/ CONSTRUCTION POWER

RECORD DRAWING CERTIFICATE

THESE DRAWINGS REFLECT RECORDED INFORMATION OBTAINED DURING CONSTRUCTION. INFORMATION PROVIDED HEREIN IS ACCURATE TO THE BEST OF MY KNOWLEDGE.

NAME DATE

SCALE: NTS

BAR IS ONE INCH ON ORIGINAL DRAWING 1"

IF NOT ONE INCH ON THIS SHEET, ADJUST SCALES ACCORDINGLY

CONSTRUCTION RECORD

FIELD BOOK

STAKING

FOREMAN

AS-BUILT

INSPECTOR

STATE OF ALASKA 49TH Thomas W. Longstaff EE-4293 REGISTERED PROFESSIONAL ENGINEER

WATER AND SEWER SYSTEM IMPROVEMENTS

TEMPORARY POWER ONE-LINE DIAGRAM

CHEFORNAK, ALASKA

CE2 ENGINEERS, INC.

ANCHORAGE, ALASKA

REVISION	BY	DATE

Project No.

Date 05/20/98

Designed TWL

Drawn DAH

Approved TWL

Sheet No. E-PL-3

SHEET 33 OF 39

d:\PROJECTS\Chefornak\E-PL-3.DWG

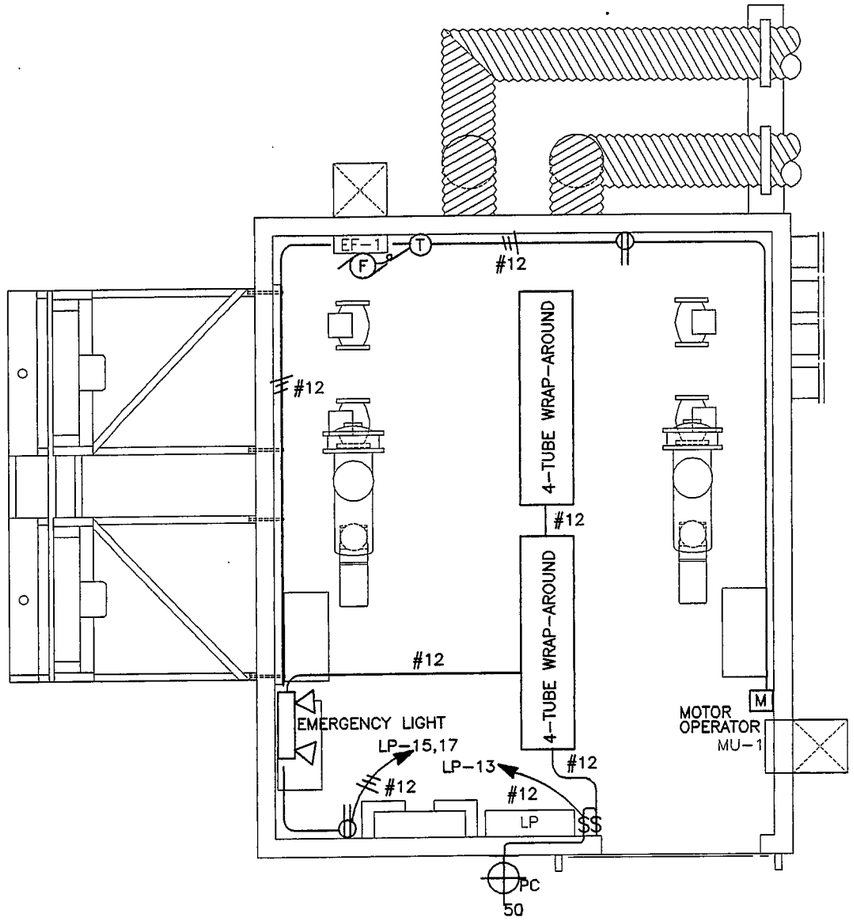

LIGHTING & VENTILATION PLAN

PANELBOARD "LP", 208Y120 VAC, 80 AMP MAIN CB, SURFACE MOUNT											
			KVA			KVA					
CKT	AMP	LOAD	ΦA	ΦB	ΦC	ΦA	ΦB	ΦC	LOAD	AMP	CKT
1	15	CP-1	1.0			1.0			RF-1	15	2
3				1.0			1.0				4
5					1.0			1.0			6
7	15	CP-2	1.0			1.0			RF-2	15	8
9				1.0			1.0				10
11					1.0			1.0			12
13	20	LIGHTS	0.6						SPACE		14
15	15	VENT FAN		0.6					SPACE		16
17	20	RECEPTACLES			0.4				SPACE		18
19		SPACE							SPACE		20
21		SPACE							SPACE		22
23		SPACE							SPACE		24
25	80	MAIN BREAKER							SPACE		26
27									SPACE		28
29								0.2	WHRCP (CONTROL PANEL)	15	30
		TOTALS	2.6	2.6	2.4	2.0	2.0	2.2	KVA		
TOTAL LOAD = 13.8 KVA @ 208 VAC = 38 AMPS											

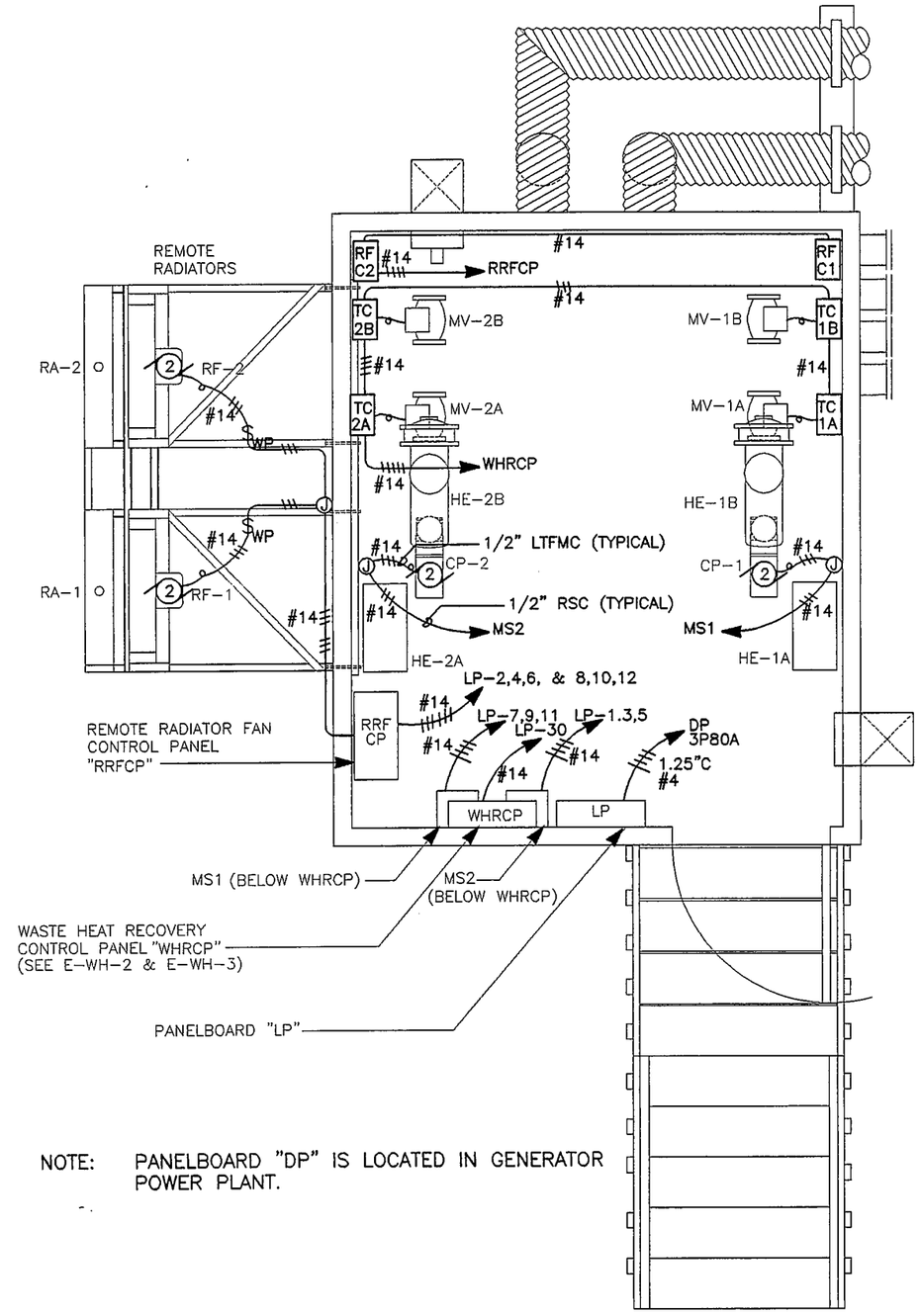

NOTE: PANELBOARD "DP" IS LOCATED IN GENERATOR POWER PLANT.

EQUIPMENT & CONTROLS PLAN

RECORD DRAWING CERTIFICATE

THESE DRAWINGS REFLECT RECORDED INFORMATION OBTAINED DURING CONSTRUCTION. INFORMATION PROVIDED HEREIN IS ACCURATE TO THE BEST OF MY KNOWLEDGE.

NAME: DATE

SCALE: NTS

BAR IS ONE INCH ON ORIGINAL DRAWING. 0 1"

IF NOT ONE INCH ON THIS SHEET, ADJUST SCALES ACCORDINGLY

CONSTRUCTION RECORD

FIELD BOOK

STAKING

FOREMAN

AS-BUILT

INSPECTOR

STATE OF ALASKA 49TH Thomas W. Longstaff EE-4293 REGISTERED PROFESSIONAL ENGINEER

WATER AND SEWER SYSTEM IMPROVEMENTS

WASTE HEAT RECOVERY LIGHTING, VENTILATION, EQUIP. AND CONTROL PLAN

CHEFORNAK, ALASKA

CE2 ENGINEERS, INC.

ANCHORAGE, ALASKA

REVISION	BY	DATE

Project No.

Date 05/20/98

Designed TWL

Drawn DAH

Approved TWL

Sheet No. E-WH-1

SHEET 34 OF 39

D:\PROJECTS\CHEFORNAK\E-WH-1.DWG

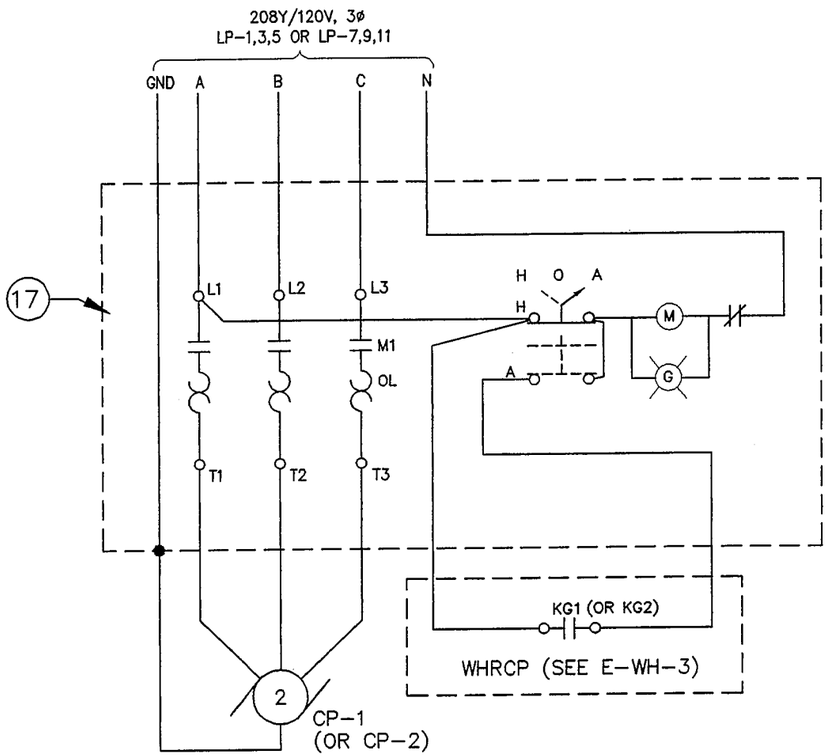

TYPICAL CP CIRCUIT

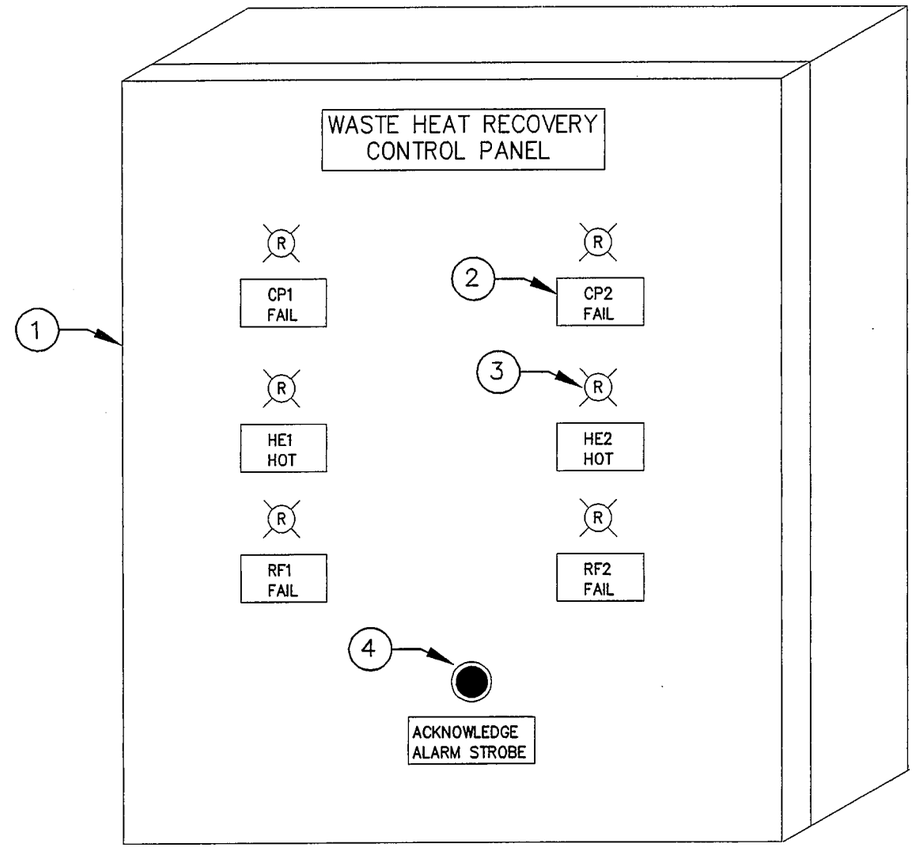

CONTROL PANEL LAYOUT

NOTE: SEE E-WH-1 FOR PLACEMENT & SEE E-WH-3 FOR CONTROL DETAILS.

"OR-EQUAL" COMPONENTS

1	ENCLOSURE, NEMA 12, STEEL W/ HINGED DOOR 12"W X 18"H X 8"D	8	RELAY 4PDT, MINIATURE SQUARE BASE, 120V COIL, W/ 5 AMP CONTACTS & PILOT LIGHT, SQUARE D TYPE 8501-RS14P14V20		
2	NAME TAG, BLACK LAMINATED PLASTIC W/ WHITE CORE 3/8" ENGRAVED LETTERS, SCREW MOUNTED	9	PROVIDE PLUG-IN SOCKETS FOR ALL RELAYS. THE SOCKETS FOR 5 AMP RELAYS SHALL BE DIFFERENT FROM THE SOCKETS FOR 10 AMP RELAYS.		
3	PILOT LIGHT, 120V, RED FULL VOLTAGE LED, PUSH TO TEST ALLEN-BRADLEY 800T-QTL10R	10	FUSE, TIME DELAY, BUSSMAN #FNM-2		
4	PUSH BUTTON SWITCH, MOMENTARY CONTACT ALLEN-BRADLEY #800T-A1A	11	FUSE, TIME DELAY, BUSSMAN #FNM-5		
5	TERMINAL BLOCK, ALLEN-BRADLEY 1492-U2	12	MAGNETIC MOTOR STARTER, NEMA SIZE 0, W/ NEMA 12 ENCLOSURE, 120V COIL, GREEN PILOT LIGHT & HOA SWITCH.		
6	RELAY TIME DELAY, 11 PIN BASE, 120V COIL, W/10 AMP CONTACTS POTTER BRUMFIELD #CB1012F70	13	#14 MTW, STRANDED COPPER CONDUCTORS FOR CONTROL WIRING.		
7	STROBE LIGHT, 120V FEDERAL SIGNAL #131DST	14	INDUSTRIAL CONTROL TRANSFORMER		

RECORD DRAWING CERTIFICATE
THESE DRAWINGS REFLECT RECORDED INFORMATION OBTAINED DURING CONSTRUCTION. INFORMATION PROVIDED HEREIN IS ACCURATE TO THE BEST OF MY KNOWLEDGE.
NAME DATE

SCALE: NTS
BAR IS ONE INCH ON ORIGINAL DRAWING
0 1"
IF NOT ONE INCH ON THIS SHEET, ADJUST SCALES ACCORDINGLY

CONSTRUCTION RECORD
FIELD BOOK
STAKING
FOREMAN
AS-BUILT
INSPECTOR

STATE OF ALASKA 49TH
Thomas W. Longstaff
EXPIRES JUNE 30, 1998
REGISTERED PROFESSIONAL ENGINEER
CE-11283

WATER AND SEWER SYSTEM IMPROVEMENTS
WASTE HEAT RECOVERY
CIRCUIT DIAGRAM AND PANEL LAYOUT
CHEFORNAK, ALASKA

CE2 ENGINEERS, INC.
ANCHORAGE, ALASKA

REVISION BY DATE

Project No.
Date 05/20/98
Designed TWL
Drawn DAH
Approved TWL

Sheet No.
E-WH-2
SHEET 35 OF 39

D:\PROJECTS\CHEFORNAK\E-WH-2.DWG

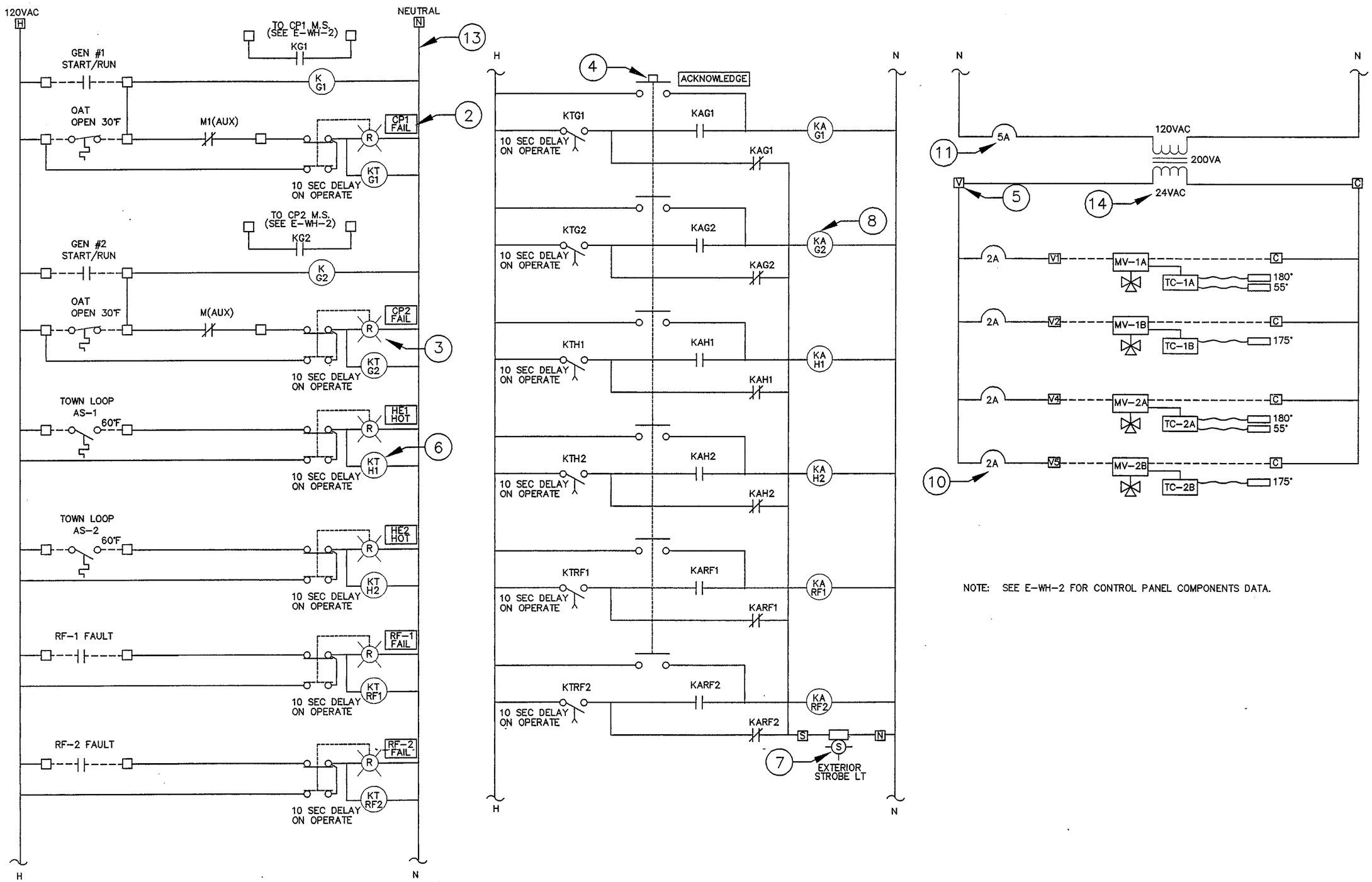

NOTE: SEE E-WH-2 FOR CONTROL PANEL COMPONENTS DATA.

WASTE HEAT RECOVERY CONTROL PANEL (WHRCP) LADDER DIAGRAM

RECORD DRAWING CERTIFICATE

THESE DRAWINGS REFLECT RECORDED INFORMATION OBTAINED DURING CONSTRUCTION. INFORMATION PROVIDED HEREIN IS ACCURATE TO THE BEST OF MY KNOWLEDGE.

NAME DATE

SCALE: NTS

BAR IS ONE INCH ON ORIGINAL DRAWING 1"

IF NOT ONE INCH ON THIS SHEET, ADJUST SCALES ACCORDINGLY

CONSTRUCTION RECORD

FIELD BOOK

STAKING

FOREMAN

AS-BUILT

INSPECTOR

STATE OF ALASKA 49TH Thomas W. Lingenfelter 12-4293 REGISTERED PROFESSIONAL ENGINEER

WATER AND SEWER SYSTEM IMPROVEMENTS

WASTE HEAT RECOVERY CONTROL PANEL LADDER DIAGRAM

CHEFORNAK, ALASKA

CE2 ENGINEERS, INC.

ANCHORAGE, ALASKA

REVISION	BY	DATE

Project No. ____ Date 05/20/98 Designed TWL Drawn DAH Approved TWL

Sheet No. E-WH-3

SHEET 36 OF 39

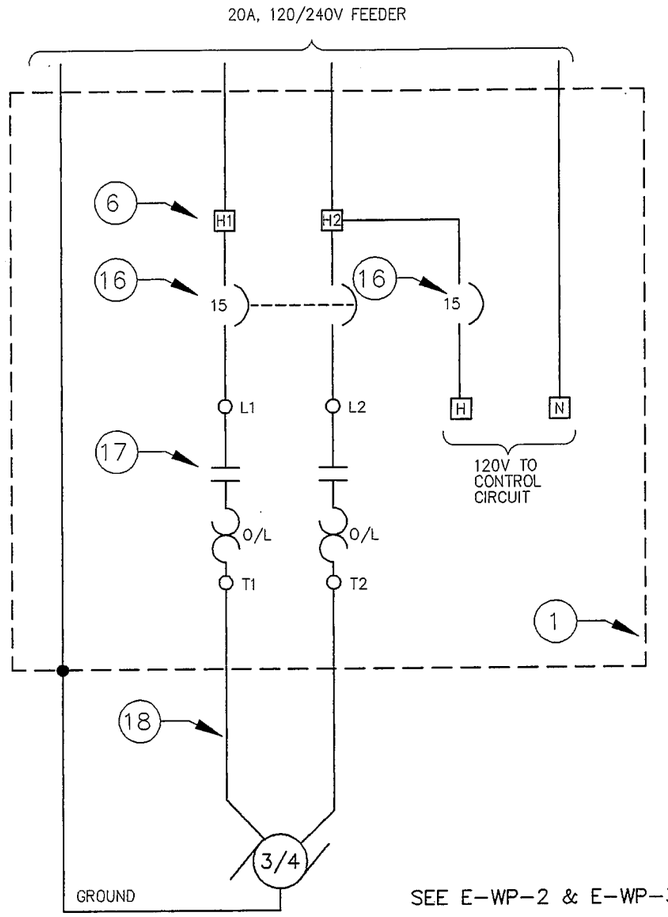

CIRCULATION PUMP P1

SEE E-WP-2 & E-WP-3 FOR CONTROL DETAILS.

CONTROL PANEL POWER CIRCUITS

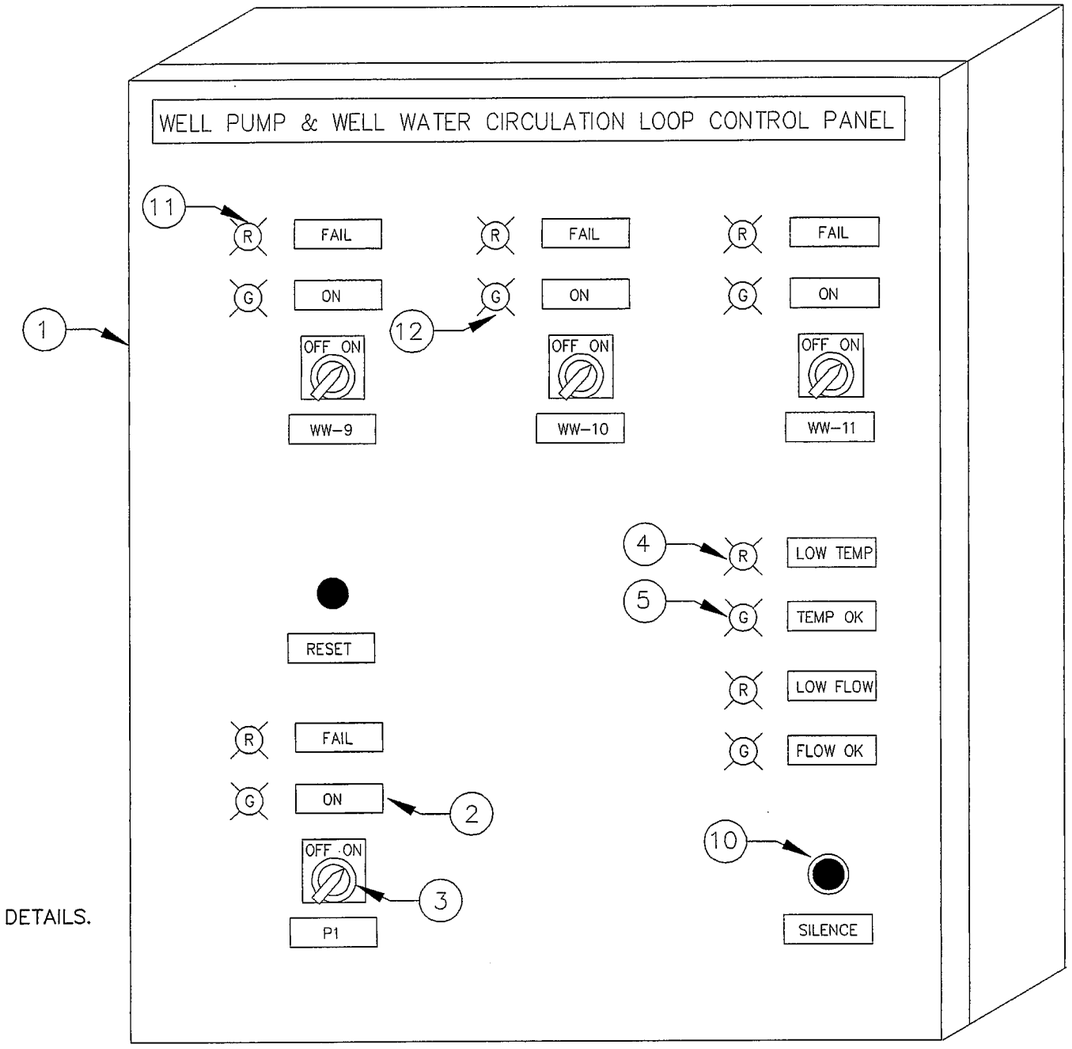

CONTROL PANEL LAYOUT

"OR-EQUAL" COMPONENTS

1	ENCLOSURE, NEMA 4, STEEL W/ HINGED DOOR	8	RELAY 2PDT, SQUARE BASE, 120V COIL, W/ 15 AMP CONTACTS & PILOT LIGHT, SQUARE D TYPE 8501-KX12P14V20	15	FUSE, TIME DELAY, BUSSMAN #FNM-2
2	NAME TAG, BLACK LAMINATED PLASTIC W/ WHITE CORE 3/8" ENGRAVED LETTERS, SCREW MOUNTED	9	PROVIDE PLUG-IN SOCKETS FOR ALL RELAYS. THE SOCKETS FOR 5 AMP RELAYS SHALL BE DIFFERENT FROM THE SOCKETS FOR 15 AMP RELAYS.	16	10,000 AIC BREAKER W/ LOCK-OUT ATTACHMENT
3	SWITCH, 2 POSITION MAINTAINED W/ TERMINAL BLOCKS & CAMS AS SHOWN SQUARE D 9001SK11BH2	10	PUSH BUTTON SWITCH, MOMENTARY CONTACTS ALLEN-BRADLEY #800T-A1A	17	NEMA SIZE 0 MAGNETIC MOTOR STARTER W/ 120V COIL.
4	PILOT LIGHT, 120V, RED FULL VOLTAGE LED, PUSH TO TEST ALLEN-BRADLEY 800T-QTL10R	11	PILOT LIGHT, 24VDC, RED FULL VOLTAGE LED, PUSH TO TEST ALLEN-BRADLEY 800T-QBL24R	18	#14 XHHW, COPPER CONDUCTORS IN 1/2" EMT OR RSC.
5	PILOT LIGHT, 120V, GREEN FULL VOLTAGE LED, PUSH TO TEST ALLEN-BRADLEY 800T-QTL10G	12	PILOT LIGHT, 24VDC, GREEN FULL VOLTAGE LED, PUSH TO TEST ALLEN-BRADLEY 800T-QBL24GG	19	#14 MTW, STRANDED COPPER CONDUCTORS FOR CONTROL SYSTEM WIRING.
6	TERMINAL BLOCK, ALLAEN-BRADLEY 1492-U2	13	RELAY 10SEC, TIME DELAY, 8 PIN OCTAL BASE, 24VDC COIL, W/10 AMP CONTACTS POTTER BRUMFIELD #CNS35-92		
7	RELAY TIME DELAY, 11PIN OCTAL BASE, 120V COIL, W/ 10 AMP CONTACTS POTTER BRUMFIELD #CB1012F70	14	ALARM HORN, 120V FEDERAL SIGNAL #300GC		

RECORD DRAWING CERTIFICATE

THESE DRAWINGS REFLECT RECORDED INFORMATION OBTAINED DURING CONSTRUCTION. INFORMATION PROVIDED HEREIN IS ACCURATE TO THE BEST OF MY KNOWLEDGE.

NAME _____ DATE _____

SCALE: NTS

BAR IS ONE INCH ON ORIGINAL DRAWING 1"

IF NOT ONE INCH ON THIS SHEET, ADJUST SCALES ACCORDINGLY

CONSTRUCTION RECORD

FIELD BOOK

STAKING

FOREMAN

AS-BUILT

INSPECTOR

STATE OF ALASKA 49TH REGISTERED PROFESSIONAL ENGINEER Thomas W. Lungstaff EE-1293

WATER AND SEWER SYSTEM IMPROVEMENTS

WELL FIELD SYSTEMS CONTROL PANEL

CHEFORNAK, ALASKA

CE2 ENGINEERS, INC.

ANCHORAGE, ALASKA

REVISION	BY	DATE

Project No. ____ Date MAY 1998 Designed TWL Drawn DAH Approved TWL

Sheet No. E-WP-1

SHEET 37 OF 39

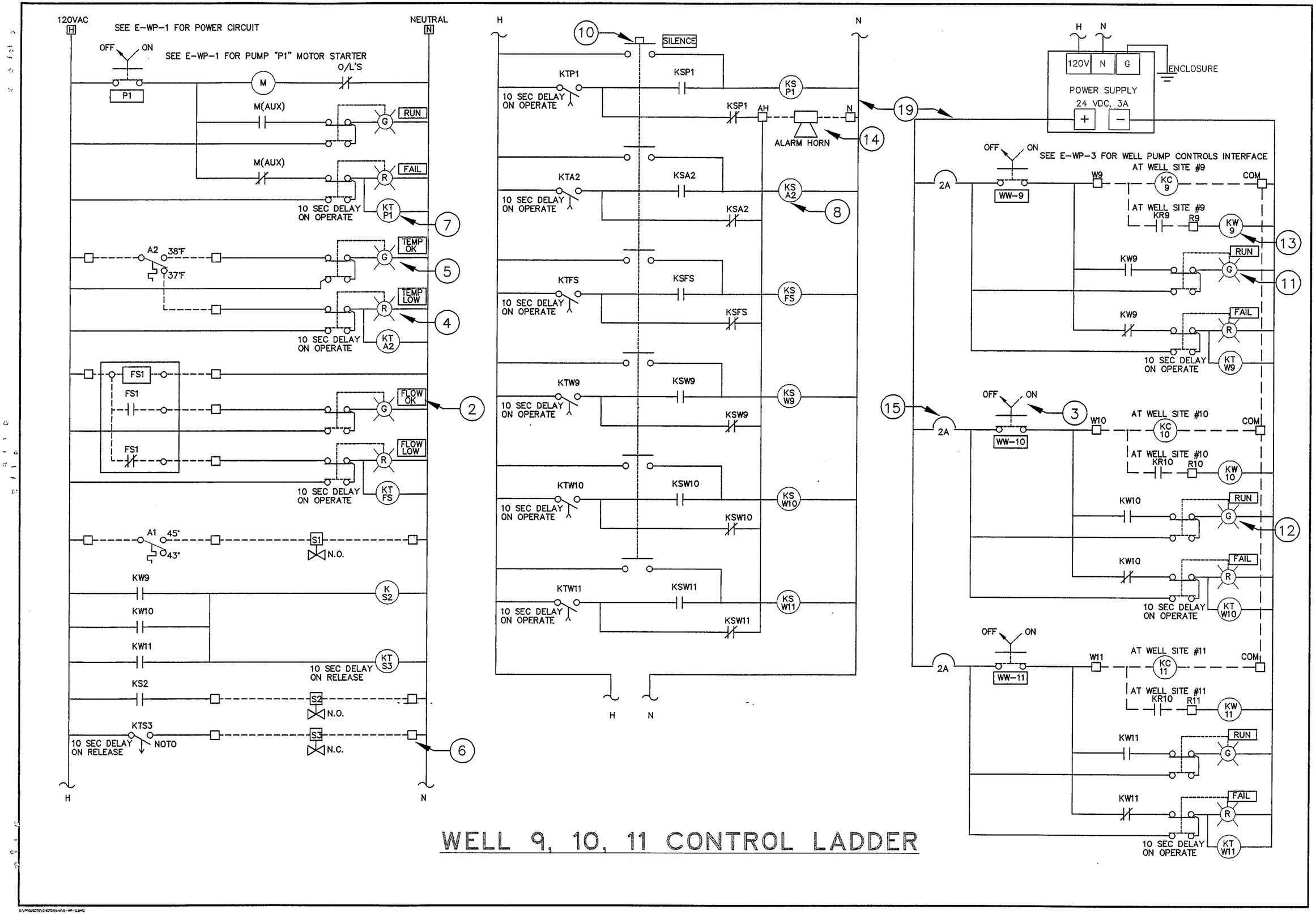

WELL 9, 10, 11 CONTROL LADDER

RECORD DRAWING CERTIFICATE

THESE DRAWINGS REFLECT RECORDED INFORMATION OBTAINED DURING CONSTRUCTION. INFORMATION PROVIDED HEREIN IS ACCURATE TO THE BEST OF MY KNOWLEDGE.

NAME: DATE

SCALE: NTS

BAR IS ONE INCH ON ORIGINAL DRAWING. 0 1"

IF NOT ONE INCH ON THIS SHEET, ADJUST SCALES ACCORDINGLY.

CONSTRUCTION RECORD
FIELD BOOK
STAKING
FOREMAN
AS-BUILT
INSPECTOR

STATE OF ALASKA 49TH TERRITORY
Thomas W. Campbell
EE-4293
REGISTERED PROFESSIONAL ENGINEER

WATER AND SEWER SYSTEM IMPROVEMENTS

WELLS 9, 10 & 11 LADDER DIAGRAM

CHEFORNAK, ALASKA

CE2 ENGINEERS, INC.

ANCHORAGE, ALASKA

REVISION	BY	DATE

Project No.
Date 05/20/98
Designed TWL
Drawn DAH
Approved TWL

Sheet No.
E-WP-2
SHEET OF

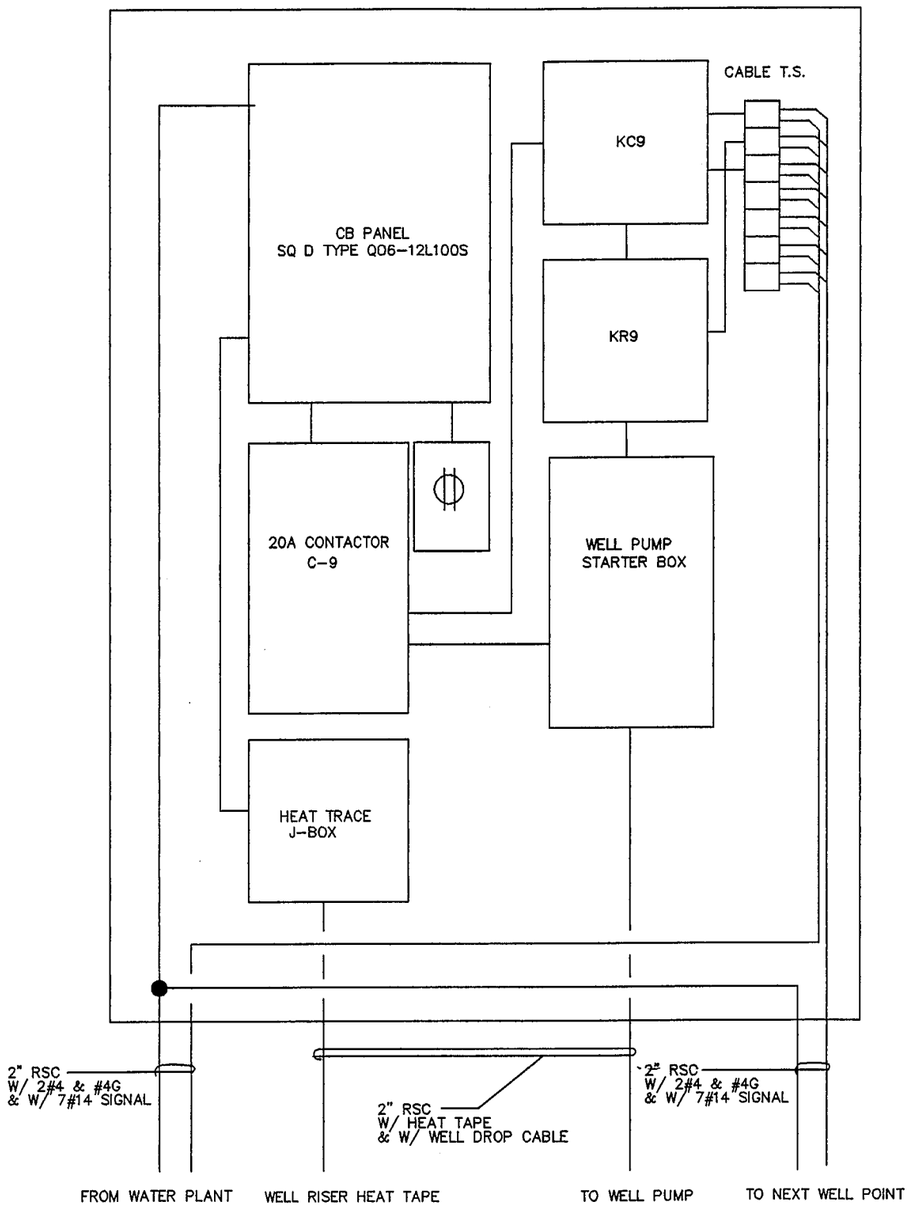

WELL POINT ENCLOSURE INTERIOR

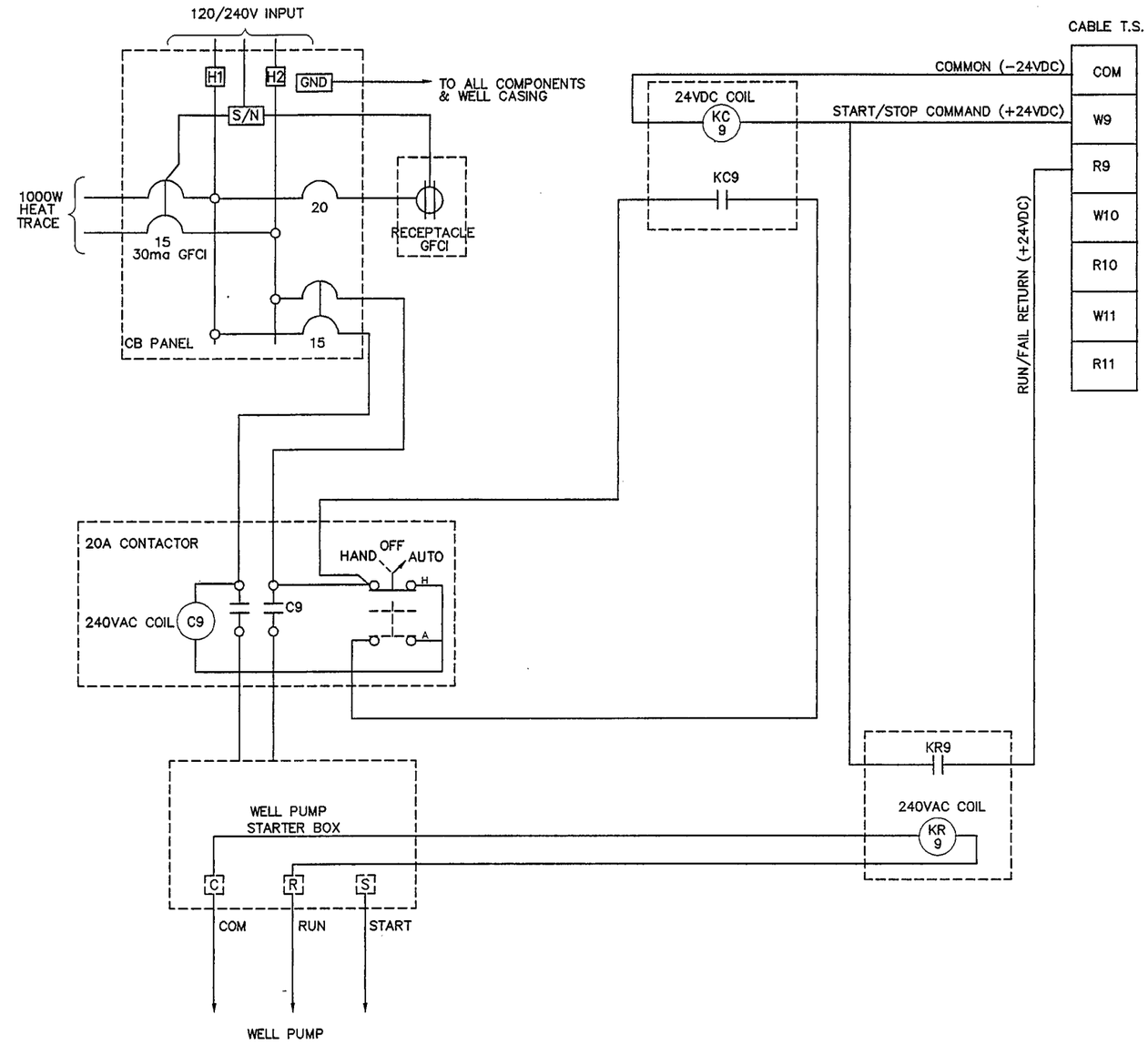

WELL POINT POWER & CONTROL WIRING

RECORD DRAWING CERTIFICATE
THESE DRAWINGS REFLECT RECORDED INFORMATION OBTAINED DURING CONSTRUCTION. INFORMATION PROVIDED HEREIN IS ACCURATE TO THE BEST OF MY KNOWLEDGE.
NAME
DATE

SCALE: NTS
BAR IS ONE INCH ON ORIGINAL DRAWING. 0 1"
IF NOT ONE INCH ON THIS SHEET, ADJUST SCALES ACCORDINGLY

CONSTRUCTION RECORD
FIELD BOOK
STAKING
FOREMAN
AS-BUILT
INSPECTOR

STATE OF ALASKA 49TH
Thomas W. Linnebach
CE-1293
REGISTERED PROFESSIONAL ENGINEER

WATER AND SEWER SYSTEM IMPROVEMENTS
WELL POINT ENCLOSURE INTERIOR, POWER & CONTROL WIRING
CHEFORNAK, ALASKA

CE2 ENGINEERS, INC.
ANCHORAGE, ALASKA

REVISION	BY	DATE

Project No.
Date 05/20/98
Designed TWL
Drawn DAH
Approved TWL

Sheet No.
E-WP-3
SHEET 39 OF 39