CITY OF CHEFORNAK, ALASKA

WASHETERIA AND WATER TANK

IN COOPERATION WITH STATE OF ALASKA
VILLAGE SAFE WATER AND
THE CITY OF CHEFORNAK, ALASKA

ISSUED FOR CONSTRUCTION REVIEW - AUG. 2016

PROJECT LOCATION

Location Map

CE2 ENGINEERS, INC.
PO BOX 232946 ANCHORAGE, AK 99523 PH: 907-349-1010 FAX: 907-349-1015

STATE OF ALASKA 49TH PAUL C. WEBNER CE-10276 REGISTERED PROFESSIONAL ENGINEER

Consultant

RECORD DRAWING CERTIFICATE

THESE DRAWINGS REFLECT RECORDED INFORMATION OBTAINED DURING CONSTRUCTION.
INFORMATION PROVIDED HEREIN IS ACCURATE TO THE BEST OF MY KNOWLEDGE.

NAME DATE

Construction Foreman _____

FINAL DESIGN (Date) _____

ADEC APPROVAL (Date) _____

Construction Period (From) _____ (To) _____

As-Builts (Date) _____

SHEET INDEX

No.	Title
GENERAL	
G1.0	COVER SHEET AND SHEET INDEX
G2.0	VICINITY MAP
G2.1	PROJECT AREA
G3.0	SYSTEM SCHEMATIC AND DESIGN CRITERIA
G4.0	GENERAL NOTES AND LEGEND
G5.0	GEOTECHNICAL INFORMATION
CIVIL	
C1.0	SURVEY CONTROL
C1.1	SITE PLAN PLAT SURVEY
C1.2	SITE PLAN LOT SURVEY
C2.0	PROJECT SITE PLAN
C3.0	FOUNDATION MICROPILE SITE PLAN
C3.1	FOUNDATION MICROPILES
C4.1	WATER TANK PLAN, ELEVATIONS AND DETAILS
C4.2	WATER TANK DETAILS
C4.3	WATER TANK PIPING AND VALVE BOX
C4.4	WATER TANK VALVE BOX DETAILS
C6.1	UTILIDOR / PIPE SUPPORT DETAILS
C6.2	PIPE DETAILS
C6.3	UTILIDOR DETAILS
C6.4	MISC. ARCTIC BOX DETAILS
C6.5	UTILIDOR PIPE ANCHORING DETAILS
C6.6	ARCTIC PIPE DETAILS
C6.7	UTILIDOR CONNECTION BRACKET DETAILS
ARCHITECTURAL	
A0.1	WASHETERIA SPECIFICATIONS
A0.2	WASHETERIA SPECIFICATIONS
A0.3	WASHETERIA SPECIFICATIONS
A1.1	FLOOR PLAN
A1.2	ENLARGED FLOOR PLANS
A1.3	ROOF PLAN, INT. ELEVATIONS, TYP. MOUNTING HTS.
A2.1	EXTERIOR ELEVATIONS
A3.1	BUILDING SECTIONS
A3.2	WALL SECTIONS
A3.3	WALL SECTIONS
STRUCTURAL	
S0.1	STRUCTURAL NOTES
S1.1	FOUNDATION PLAN
S1.2	MICROPILE DETAILS
S2.1	FLOOR FRAMING PLAN
S2.2	FLOOR FRAMING DETAILS
S2.3	RAMP / EXT. STAIR FRAMING PLAN
S3.1	ROOF FRAMING PLAN
S4.1	BUILDING SECTIONS
S4.2	WALL SECTIONS
MECHANICAL	
M1.0	LEGEND, DRAWING LIST, NOTES, MECH/PLG OVERVIEW
M1.1	EQUIPMENT LIST
M1.2	EQUIPMENT LIST AND DETAILS
M1.3	PLUMBING FIXTURES, MATERIALS, NOTES
M1.4	PIPING AND GENERAL MATERIALS
M1.5	CONTROLS AND SEQUENCE OF OPERATION
M1.6	CONTROL DIAGRAMS
M1.7	BOILER B-1, B-2, B-3, B-4 CONTROL DIAGRAM
M1.8	UNIT HEATER UH-1, UH-2, UH-3 CONTROLS
M1.9	CONTROL DIAGRAMS
M2.0	UNDERFLOOR PLUMBING PLAN
M2.1	PLUMBING PLAN
M2.5	PLUMBING DIAGRAMS AND DETAILS
M3.0	MECHANICAL PLAN - PIPING
M3.05	UNDERFLOOR-UTILAWAY HEAT TRACING
M3.1	MECHANICAL PLAN - HVAC
M3.2	MECHANICAL SECTIONS - DETAILS
M3.5	HVAC AND HEATING DETAILS
M3.6	MECHANICAL DETAILS
M4.0	HEATING AND WATER SUPPLY DIAGRAM #1
M4.1	HEATING AND WATER SUPPLY DIAGRAM #2
ELECTRICAL	
E0.1	ELECTRICAL LEGEND AND GENERAL REQUIREMENTS
E1.1	ELECTRICAL SITE PLAN
E2.1	ELECTRICAL LIGHTING PLAN
E3.1	WASHETERIA POWER PLAN
E3.2	POWER PLANT POWER PLAN
E4.1	WASHETERIA REMOTE MONITORING PLAN
E5.1	ELECTRICAL POWER DIAGRAMS AND DETAILS
E5.2	ELECTRICAL POWER DIAGRAMS AND DETAILS
E6.1	ELECTRICAL CONTROL DIAGRAMS AND DETAILS

G:\ACAD\CHEFORNAK\2016 Washeteria and Water Tank\COVER TFC.dwg, 8/30/2016 3:07:12 PM, cmerz, \\Ce2main\LANIER MP C2050\LD520C PCL 6

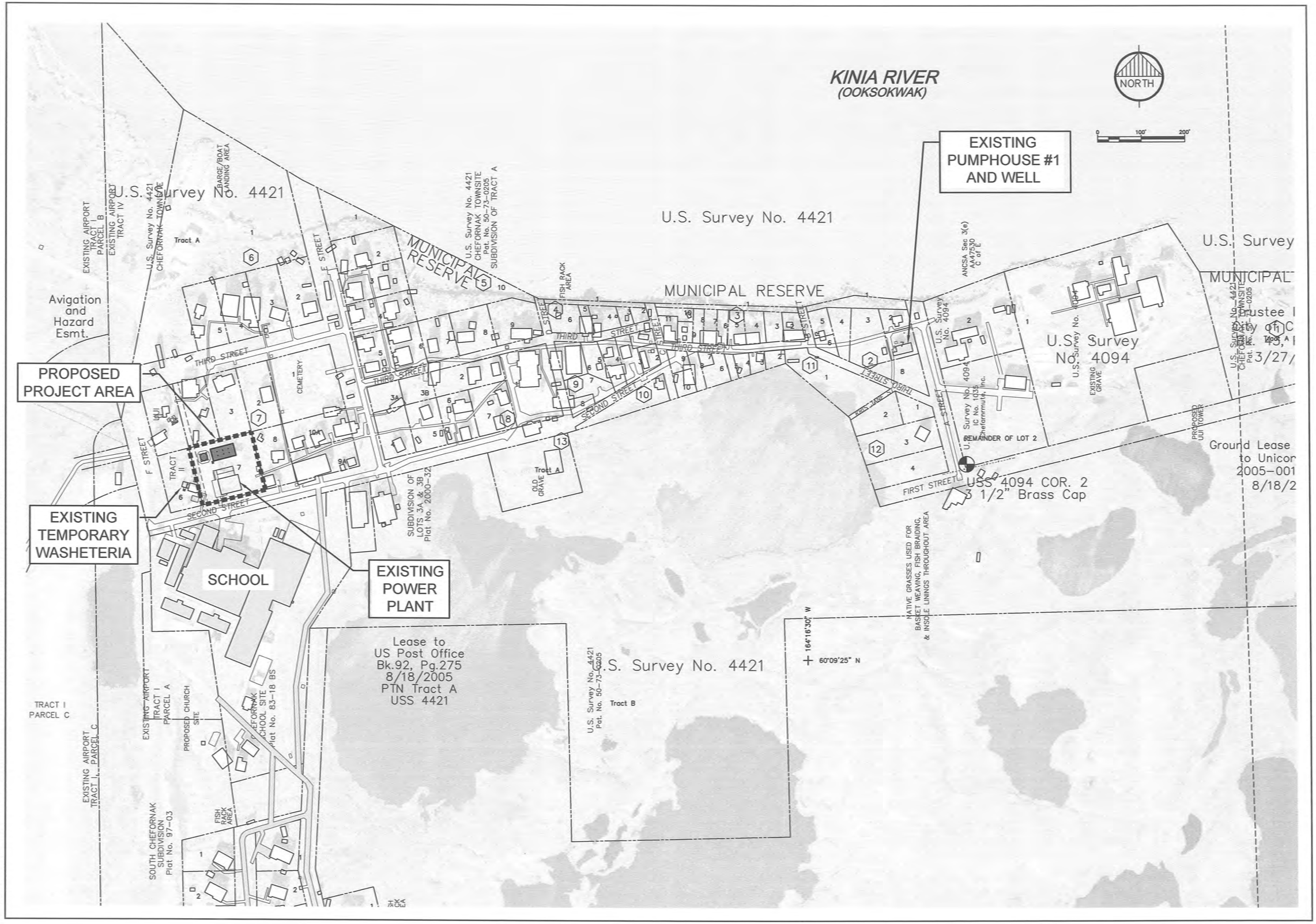

RECORD DRAWING CERTIFICATE

THESE DRAWINGS REFLECT RECORDED INFORMATION OBTAINED DURING CONSTRUCTION. INFORMATION PROVIDED HEREIN IS ACCURATE TO THE BEST OF MY KNOWLEDGE.

NAME DATE

SCALE: AS SHOWN

BAR IS ONE INCH ON ORIGINAL DRAWING

IF NOT ONE INCH ON THIS SHEET, ADJUST SCALES ACCORDINGLY

CONSTRUCTION RECORD

FIELD BOOK

STAKING

FOREMAN

AS-BUILT

INSPECTOR

STATE OF ALASKA 49TH PAUL C. WEISNER CE-10276 REGISTERED PROFESSIONAL ENGINEER

8-30-2016

WASHETERIA AND WATER TANK

VICINITY MAP

CHEFORNAK, ALASKA

CE2 ENGINEERS, INC.

PO BOX 232946 ANCHORAGE, AK 99523 PH: 907-349-1010 FAX: 907-349-1015

REVISION	BY	DATE

Project No. ____

Date AUG 2016

Designed ____

Drawn CM

Approved PCW

Sheet No. G2.0

SHEET ____ OF ____

G:\ACAD\CHEFORNAK\2016 Washeteria and Water Tank\G2.0 Vicinity Map.dwg, 8/30/2016 1:25:08 PM, cmerz, LANIER MP C2050_LD520C PCL 6 COLOR.pc3

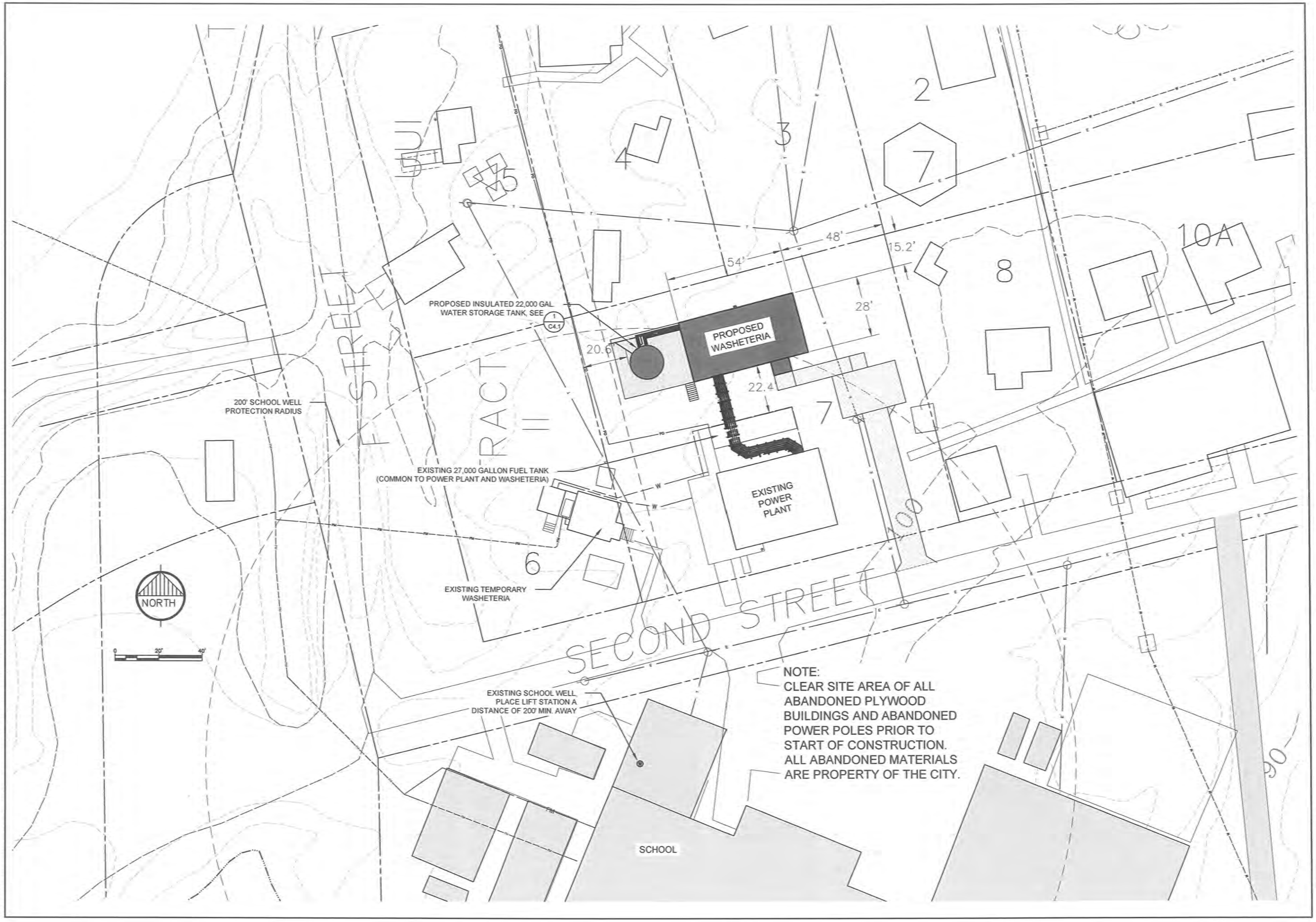

RECORD DRAWING CERTIFICATE

THESE DRAWINGS REFLECT RECORDED INFORMATION OBTAINED DURING CONSTRUCTION. INFORMATION PROVIDED HEREIN IS ACCURATE TO THE BEST OF MY KNOWLEDGE.

NAME DATE

SCALE: AS SHOWN

BARS ON THIS SHEET ORIGINAL DRAWING 0 1"

IF NOT ONE INCH ON THIS SHEET, ADJUST SCALES ACCORDINGLY

CONSTRUCTION RECORD

FIELD BOOK

STAKING

FOREMAN

AS-BUILT

INSPECTOR

STATE OF ALASKA 49TH PAUL C. WEBNER CE-10276 REGISTERED PROFESSIONAL ENGINEER

WASHETERIA AND WATER TANK

PROJECT AREA

CHEFORNAK, ALASKA

CE2 ENGINEERS, INC.

PO BOX 220948 ANCHORAGE, AK 99503 PH: 907-349-1010 FAX: 907-349-1015

REVISION	BY	DATE

Project No. ____ Date AUG 2016 Designed PCW Drawn CM Approved PCW

Sheet No. G2.1

SHEET ____ OF ____

G:\ACAD\CHEFORNAK\2016 Washeteria and Water Tank\G2.1 PROJECT AREA.dwg, 8/30/2016 1:19:32 PM, cmerz, \\Ce2main\LANIER MP C2050/LD520C PCL 6

PROJECT SCOPE

- CONSTRUCT A 1,512 SQUARE FOOT WASHETERIA BUILDING, WHICH INCLUDES LAUNDRY FACILITIES, TWO RESTROOMS, UTILITY OFFICE AND MECHANICAL ROOM.
- WORK WILL INCLUDE ACCESS BOARDWALK AND A HANDICAP ACCESSIBLE RAMP.
- CONSTRUCTION OF WASHETERIA AND WATER STORAGE TANK.

PROJECT DESIGN CRITERIA

- DESIGN POPULATION (2033): 532 PERSONS
- AVERAGE WATER DEMAND (2033): 3,000 GAL/DAY
- FINISH FLOOR ABOVE FLOOD HIGH WATER ELEVATION.
- PUBLIC FACILITY DESIGNED TO BE ADA ACCESSIBLE.
- BOARDWALK WILL BE CONNECTED TO PARKING AREA AND EXISTING BOARDWALK TO ACCOMMODATE WASHETERIA.
- POWER IS SUPPLIED FROM CITY'S DISTRIBUTION SYSTEM. IT WILL BE STEPPED DOWN TO 208/120V AT THE WASHETERIA SERVICE.
- BOILERS AND RECOVERED WASTE HEAT FROM THE CITY POWER PLANT WILL PROVIDE SUPPLEMENTAL HEAT TO WASHETERIA AND FUTURE HONEY BUCKET DUMP STATION.
- DRYERS WILL OPERATE BY HOT GLYCOL AND UTILIZE A TWO STAGE ENGINEERED COIL.
- FUEL FOR THE BOILERS IS SUPPLIED TO A DAY TANK SUPPLIED FROM THE POWER PLANT 27,000 GALLON TANK AND THE FUEL USE WILL BE METERED.
- A HYDRONICALLY HEATED WATER HEATER WILL PROVIDE HOT WATER TO THE WASHERS, BATHROOMS, AND SHOWERS.
- WASHERS, DRYERS AND SHOWERS ARE TOKEN-OPERATED.
- WASTE WILL BE DISCHARGED BY GRAVITY FROM WASHETERIA TO A FUTURE LIFT STATION AT THE HONEY BUCKET DUMP STATION.
- WASHETERIA WILL SUPPLY PRESSURIZED UTILITY WATER AND FILTERED GRAY WATER TO HONEY BUCKET DUMP STATION.

LEGEND

S	SEWER LINE
GW	GRAY WATER
E	ELECTRIC
W	WATER
DHW	DOMESTIC HOT WATER
DCW	DOMESTIC COLD WATER
G	GLYCOL
F	FUEL LINE
D	DRYER
C.P.	CIRCULATION PUMP
H.E.	HEAT EXCHANGER
L.S.	LIFT STATION
P.P.	PRESSURE PUMP
P.T.	PRESSURE TANK
W	WASHER
W.H.	WATER HEATER

NOTE:

SCHEMATIC ONLY - EQUIPMENT LOCATIONS MAY VARY. SEE MECHANICAL SHEETS.

DAILY WASHETERIA WATER CONSUMPTION FOR DESIGN

Item	Consumption Rate	Water Consumption
30-lb washer/extractors (4 ea)	31 loads/day @ 44 gallons/load	1400 gallons
18-lb washers (2 ea)	20 loads/day@ 22 gallons/load	500 gallons
Toilets (2 ea)	30 flushes/day @ 1.6 gallons/flush	200 gallons
Showers (2 ea)	20 showers/day @ 25 gallons/shower	500 gallons
Lavatory (2 ea)	50 gallons/day	50 gallons
Utility sinks (2 ea)	30 gallons/day	30 gallons
	Total estimated daily water consumption	2680 gallons per day
	Engineering design consideration	3000 gallons per day

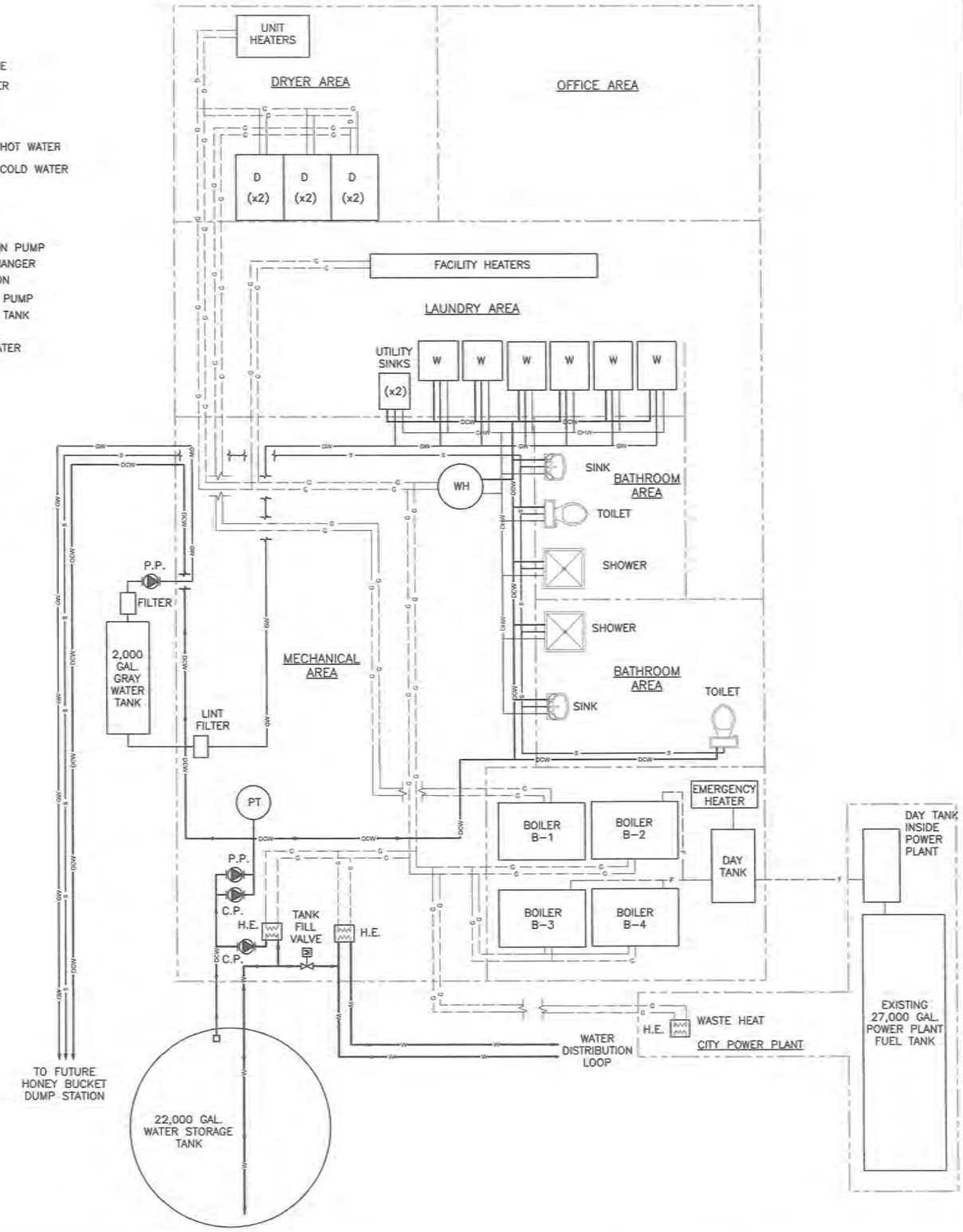

RECORD DRAWING CERTIFICATE

THESE DRAWINGS REFLECT RECORDED INFORMATION OBTAINED DURING CONSTRUCTION. INFORMATION PROVIDED HEREIN IS ACCURATE TO THE BEST OF MY KNOWLEDGE.

NAME DATE

SCALE: AS SHOWN

CONSTRUCTION RECORD

FIELD BOOK

STAKING

FOREMAN

AS-BUILT

INSPECTOR

STATE OF ALASKA 49TH PAUL C. WEBER CE-10276 REGISTERED PROFESSIONAL ENGINEER

WASHETERIA AND WATER TANK

SYSTEM SCHEMATIC AND DESIGN CRITERIA

CHEFORNAK, ALASKA

CE2 ENGINEERS, INC.

PO BOX 232048 ANCHORAGE, AK 99523 PH: 907-349-1019 FAX: 907-349-1015

REVISION	BY	DATE

Project No. ____ Date AUG 2016 Designed PCW Drawn CM Approved PCW

Sheet No. G3.0

SHEET ____ OF ____

G:\ACAD\CHEFORNAK\2016 Washeteria and Water Tank\G3.0 Schematic and Design Criteria.dwg, 8/30/2016 1:20:06 PM, cmerz, LANIER MP C2050_LD520C PCL 6 COLOR.pc3

GENERAL NOTES

1. ALL CONSTRUCTION SHALL BE DONE IN A SAFE WORKMANLIKE MANNER TO INDUSTRY STANDARDS AND IN CONFORMANCE WITH APPLICABLE LOCAL STATE AND FEDERAL CODES AND REGULATIONS. HIGH STANDARDS OF WORKMANSHIP SHOWING A SENSE OF PRIDE BY WORKMEN SHALL BE MAINTAINED. WORKERS SHALL BE PREPARED TO SIGN THEIR INDIVIDUAL WORK AS IF IT WAS THEIR OWN ARTWORK.
2. ALL MATERIALS SHALL MEET OR EXCEED THE MINIMUM QUALITY STANDARDS SPECIFIED IN THE DRAWINGS. ANY MATERIAL IN CONTACT WITH THE WELL WATER OR POTABLE WATER SHALL BE NSF 61 APPROVED. SOLDER CONTAINING LEAD SHALL NOT BE ALLOWED.
3. THE BASIS OF VERTICAL CONTROL IS THE 3" BLM BRASS CAP OF USS 4412, TR-A, CORNER 11, BLOCK 6, AS SHOWN ON SURVEY CONTROL SHEET C1.0 AS POINT INDENTIFIER 616. THE ELEVATION OF THE TOP OF CAP IS 77.68 FT.
4. THE BASIS OF HORIZONTAL CONTROL IS THE BEARING BETWEEN POINT INDENTIFIER 600 AND POINT IDENTIFIER 616 AS SHOWN ON SURVEY CONTROL SHEET C1.0. THE BEARING IS NORTH 7° 14' 42" E WITH A LENGTH OF 2988.5 FEET.
5. EXISTING UTILITIES ARE SHOWN IN APPROXIMATE LOCATION TO THE BEST KNOWLEDGE OF THE ENGINEER AT THE TIME OF DESIGN. UTILITY RECORDS MAY NOT BE COMPLETELY ACCURATE. THE PROJECT SUPERINTENDENT SHALL VERIFY HORIZONTAL AND VERTICAL LOCATION OF UTILITIES WITHIN EACH CONSTRUCTION REACH PRIOR TO CONSTRUCTION. ALL UTILITIES ARE ABOVE GROUND UNLESS OTHERWISE NOTED.

WATER AND SEWER -	CHEFORNAK WATER AND SEWER UTILITY	(907) 867-8301
ELECTRIC -	NATERKAQ LIGHT PLANT	(907) 867-8213
TELEPHONE -	UNITED UTILITIES, INC.	(800) 478-2020

6. THE PROJECT SUPERINTENDENT SHALL BE RESPONSIBLE FOR MAINTAINING A CLEAN SET OF AS-BUILT "RED LINE" RECORD DRAWINGS SHOWING LOCATION AND SWING TIES TO ALL BURIED SYSTEM COMPONENTS. ALL ELEVATIONS SHALL BE MARKED ASB (AS-BUILT) OR F.C. (FIELD CHANGED) WITH THE CORRECT VALUE INSERTED. DRAWINGS SHALL BE KEPT CURRENT IN RED PENCIL AND UPDATED DAILY IN A NEAT AND LEGIBLE FASHION. A COPY OF THE AS-BUILT DRAWINGS SHALL BE SUBMITTED TO THE CITY OF CHEFORNAK AND THE VILLAGE SAFE WATER PROJECT ENGINEER.
7. GENERAL RESTORATION - THE AREAS IMPACTED BY CONSTRUCTION SHALL BE RETURNED TO PRECONSTRUCTION CONDITION OR BETTER. CONSTRUCTION DEBRIS SHALL BE REMOVED FROM THE AREA AND DISPOSED OF IN A PROPER MANNER. DUE CARE AND CAUTION SHALL BE TAKEN TO AVOID DISTURBING PERSONAL PROPERTY.
8. CONSTRUCTION IN SENSITIVE AREAS - TIMBER MATS OR PADS SHALL BE USED TO PROTECT VEGETATIVE COVER DURING CONSTRUCTION. ANY DAMAGE CAUSED BY CONSTRUCTION ACTIVITIES SHALL BE REPAIRED OR RESEEDED AS NECESSARY TO RETURN THE AREAS AFFECTED BY CONSTRUCTION TO ITS PRECONSTRUCTION STATE.
9. THE CONSTRUCTION SITE SHALL BE ADEQUATELY PROTECTED, RESTRICTED AND BARRICADED IN THE BEST PUBLIC INTERESTS OF HEALTH, SAFETY AND WELFARE, WITH VISIBLE AND STABLE BARRIERS, UNDERSTANDABLE, LARGE-PRINT WARNING SIGNS, AND OTHER PRECAUTIONARY EQUIPMENT AND MEASURES AS REQUIRED. ALL SAFETY MEASURES SHALL BE IN CONFORMANCE WITH APPLICABLE STATE OF ALASKA DOT AND OSHA SAFETY REQUIREMENTS.
10. EXISTING BOARDWALK SHALL BE REMOVED ONLY WHERE INDICATED ON THE PLANS AND IN ALL AREAS WHERE THE EXISTING BOARDWALK CONFLICTS WITH THE PROPOSED BOARDWALK ALIGNMENT. REMOVED BOARDWALK MATERIAL WITH ANY SALVAGE VALUE SHALL BE CLEANED OF FASTENERS (NAILS, SCREWS, PLATES, ETC.) AND NEATLY STACKED AT A LOCATION DESIGNATED BY THE CITY. PROVIDE STICKERS BETWEEN EVERY THIRD ROW IN THE STACK. EXISTING BOARDWALK MATERIAL WITH NO SALVAGE VALUE SHALL BE DISPOSED OF AT THE LANDFILL.

GENERAL DESIGN CRITERIA:

DESIGN TEMPERATURE:	13,200 HEATING DEGREE DAYS
LOOP WATER TEMPERATURE:	40°F ± 2°F
HEATING LOADS:	
BUILDING	50,000 Btu-HR
DOMESTIC WATER	50,000 Btu-HR
DRYERS	(6) @ 60,000 Btu-HR
WASHERS	(SEE MECHANICAL)
AIR CHANGES	4 / HOUR

WATERLINES / WATER TANK:

1. TESTING - ALL TESTING SHALL BE IN CONFORMANCE WITH THE FOLLOWING REQUIREMENTS.
   A. PLUMBING TESTING - PERFORM A TEST OF WATERLINES. ALL POTABLE WATER PIPING MUST BE PRESSURIZED TO 90 PSI WITH WATER AND LEFT FOR 1 HOUR. AFTER THE INITIAL STABILIZATION PERIOD WITH NO LOSS IN PRESSURE.
   B. ALL TESTS SHALL BE WITNESSED BY A REPRESENTATIVE DESIGNATED BY THE OWNER (CITY OF CHEFORNAK). UPON SUCCESSFUL COMPLETION OF A TEST THE RESULTS OF THE TEST SHALL BE DOCUMENTED ON A TEST FORM AND ACKNOWLEDGED BY SIGNATURE OF THE OWNER'S REPRESENTATIVE WITNESSING THE TEST AND BY THE PROJECT SUPERINTENDENT. THE SUPERINTENDENT'S RED LINED AS-BUILT DRAWINGS SHALL ALSO NOTE, FOR EACH SEGMENT OF THE SYSTEM TESTED, THE TIME AND DATE OF THE TEST AND THE NAME OF THE OWNER'S WITNESS. COPIES OF THIS TEST SHALL BE SENT TO VSW ENGINEER.
   C. THE CONSTRUCTION MANAGER WILL SUBMIT A QA/QC MANUAL OF ALL TESTING FOR REVIEW.
2. WATER PIPING SHALL BE BUTT FUSED, HDPE SDR 11 (PE 3408), ROUTED THROUGH AN INSULATED ARCTIC PIPE DUCT. THE DUCT SHALL HAVE A 4"Ø HDPE, SDR 17 CORE PIPE, 3" MINIMUM OF 3-4 LB/CF POLYURETHANE FOAM AND AN 12"ØX16 GAUGE CORRUGATED ALUMINUM JACKET.
3. DISINFECTION - ALL WATERLINES AND WATER TANKS TO BE DISINFECTED AND TESTED FOR COLIFORM IN ACCORDANCE WITH AWWA C651 AND C652.

BOARDWALK:

1. ALL BOARDWALK MATERIALS SHALL BE AS SPECIFIED IN THE DRAWINGS AND MEET THE FOLLOWING REQUIREMENTS:
   A. LUMBER: HEMLOCK AND DOUGLAS FIR (HEM-FIR) GRADE #2 OR BETTER. ALL SIZES ARE GIVEN IN NOMINAL DIMENSIONS (I.E., 4X12 WILL MEASURE 3 1/2" THICK BY 11 1/2" WIDE).
   B. WOOD TREATMENT: ALL WOOD MATERIALS USED SHALL BE TREATED WITH THE WOOD PRESERVATIVE CROMATED COPPER ARSENATE (CCA) AT THE FOLLOWING CONCENTRATIONS:
      "SOIL CONTACT" (INCLUDES ALL SLEEPERS) - 0.6 POUNDS PER CUBIC FOOT
      ABOVE GROUND (>6" ABOVE GROUND) - 0.4 POUNDS PER CUBIC FOOT

GENERAL STRUCTURAL NOTES

1. UNLESS NOTED OTHERWISE, ALL CONSTRUCTION SHALL CONFORM TO 2009 IBC STANDARD SPECIFICATIONS. IN ADDITION TO DEAD LOADS, THE BOARDWALK WAS DESIGNED FOR THE LIVE AND ENVIRONMENTAL LOADS AS SHOWN ON THE STRUCTURAL GENERAL NOTES, SHEET S0.1
2. BOARDWALK FOUNDATION
   A FOUNDATION INVESTIGATION WAS PREPARED FOR A PREVIOUS PROJECT BY DUANE MILLER AND ASSOCIATES. SOILS IN THE AREA GENERALLY CONSIST OF A PUMICE BOLDER MATRIX WITH A THIN ORGANIC MAT OVERLAYING SILT. MARGINAL TEMPERATURE PERMAFROST AS WELL AS THAWED SOIL CONDITIONS EXIST IN THE PROJECT AREA.
3. LUMBER SHALL BE HEM-FIR, GRADE NO. 2 OR BETTER. ALL WOOD MEMBERS SHALL BE TREATED WITH THE WOOD PRESERVATIVE CCA, CROMATED COPPER ARSENATE, WITH THE FOLLOWING CONCENTRATIONS:
   Soil Contact - 0.6 pounds per cubic foot
   Above Grade - 0.4 pounds per cubic foot
4. STEEL HARDWARE AND FASTENERS, INCLUDING STRUCTURAL PLATES, SHAPES, BARS, AND ASSEMBLIES, SHALL BE GALVANIZED IN ACCORDANCE WITH THE REQUIREMENTS OF ASTM A-123. BOLTS, NUTS AND SIMILAR THREADED FASTENERS SHALL BE GALVANIZED IN ACCORDANCE WITH ASTM A-153. SURFACES SHALL BE THOROUGHLY CLEANED OF RUST AND SCALE PRIOR TO GALVANIZING. FIELD REPAIRS TO GALVANIZING SHALL BE MADE USING "GALVINOX", GALVO-WELD", OR EQUAL.

PIPING (GENERAL):

1. ALL PIPING AND FITTINGS SHALL BE NSF-61 COMPLIANT WHERE SUCH PIPING AND FITTINGS ARE IN CONTACT WITH RAW OR POTABLE WATER IN THE WATER TREATMENT OR DISTRIBUTION PROCESS.
2. ALL PIPING SHALL BE LEAD FREE.
3. ALL PLUMBING USING SOLDERED JOINTS SHALL USE A SOLDER CERTIFIED TO NOT TO CONTAIN LEAD (BRIDGET OR EQUAL)

COPPER TUBING AND FITTINGS:

1. ALL COPPER TUBING SHALL BE ASTM B75 DRAWN TEMPER, ANSI/NSF-61 CERTIFIED, TYPE L THICKNESS.
2. COPPER SOLDER FITTINGS SHALL BE PRODUCED IN ACCORDANCE WITH ASME/ANSI B16.22. AND SHALL BE ANSI/NSF-61 CERTIFIED.

SERVICE LINES:

1. HDPE MATERIAL
   A) LISTED BY THE PPI WITH DESIGNATION OF PE-3408
   B) CELL CLASSIFICATION OF 345434C OR BETTER IN ACCORDANCE WITH ASTM D3350
   C) MUST EXCEED 1000 HOURS WHEN TESTED IN ACCORDANCE WITH ASTM F1248 RING ENVIRONMENTAL STRESS CRACK RESISTANCE TEST) WITH FEWER THAN 50 PERCENT FAILURES.
   D) APPROVED BY THE NATIONAL SANITATION FOUNDATION (NSF) FOR POTABLE WATER SERVICE.
   E) SHALL CONTAIN TWO PERCENT (2%) CARBON BLACK FOR ULTRAVIOLET (UV) PROTECTION AND SHALL BE HOMOGENEOUS THROUGHOUT.

MECHANICAL: FOR MECHANICAL NOTES SEE SHEET M1.1

HYDRONIC HEAT TRACE:

1. HYDRONIC HEAT TRACE:
   HYDRONIC HEAT TRACE (WHERE SPECIFIED) SHALL BE A MINIMUM OF 1-1/2" DIA. HDPE, SDR 11 AND LISTED BY THE PLASTIC PIPE INSTITUTE (PPI) WITH A DESIGNATION OF PE4710 AND A CELL CLASSIFICATION OF PE445574C OR BETTER AS PER ASTM D3350.

PIPELINE TESTING:

1. GENERAL:
   ALL TESTING SHALL BE IN CONFORMANCE WITH THE FOLLOWING REQUIREMENTS:
   ALL TESTS SHALL BE WITNESSED BY A REPRESENTATIVE DESIGNATED BY THE COMMUNITY. UPON SUCCESSFUL COMPLETION OF A TEST THE RESULTS OF THE TEST SHALL BE DOCUMENTED ON A TEST FORM AND ACKNOWLEDGED BY SIGNATURE OF THE COMMUNITY'S REPRESENTATIVE WITNESSING THE TEST AND BY THE PROJECT SUPERINTENDENT. THE SUPERINTENDENT'S RED LINED AS-BUILT DRAWINGS SHALL ALSO NOTE THE TIME AND DATE OF THE TEST, AS WELL AS THE NAME OF THE COMMUNITY'S WITNESS, FOR EACH PIPE SEGMENT TESTED.
2. FORCEMAIN TESTING:
   PERFORM HYDROSTATIC TESTING OF ALL FORCEMAIN PIPING. FILL THE LINES WITH POTABLE WATER AND REMOVE AIR POCKETS PRIOR TO STARTING THE TEST. PRESSURIZE TO 100 PSI AND LEAVE FOR A MINIMUM OF 1 HOUR. AFTER THIS INITIAL PERIOD, ADD WATER TO BRING THE PRESSURE UP TO 100 PSI AND BEGIN A ONE HOUR TEST. THERE SHALL BE NO LOSS IN PRESSURE DURING THE 1 HOUR TEST FOR THE PIPING TO BE ACCEPTED.
3. GLYCOL HEAT TRACE TESTING - PERFORM HYDROSTATIC TESTING OF GLYCOL HEAT TRACE. HYDROSTATIC TESTS SHALL BE PERFORMED AFTER INSTALLATION. FILL THE LINE WITH WATER AND REMOVE AIR PRIOR TO STARTING THE TEST. PRESSURIZE TO 1.5 X OPERATING PRESSURE (80 PSI) = 120 PSI AND LEAVE FOR A MINIMUM OF 1-HOUR. AFTER THIS INITIAL PERIOD, ADD WATER TO BRING THE PRESSURE UP TO 120 PSI AND BEGIN A 4-HOUR TEST. FOR THE GLYCOL LOOP TO BE ACCEPTED THERE SHOULD BE NO LOSS IN PRESSURE. NO VISIBLE LEAKS SHOULD BE NOTED UPON A VISUAL INSPECTION OF EACH JOINT UNDER PRESSURE.

LEGEND

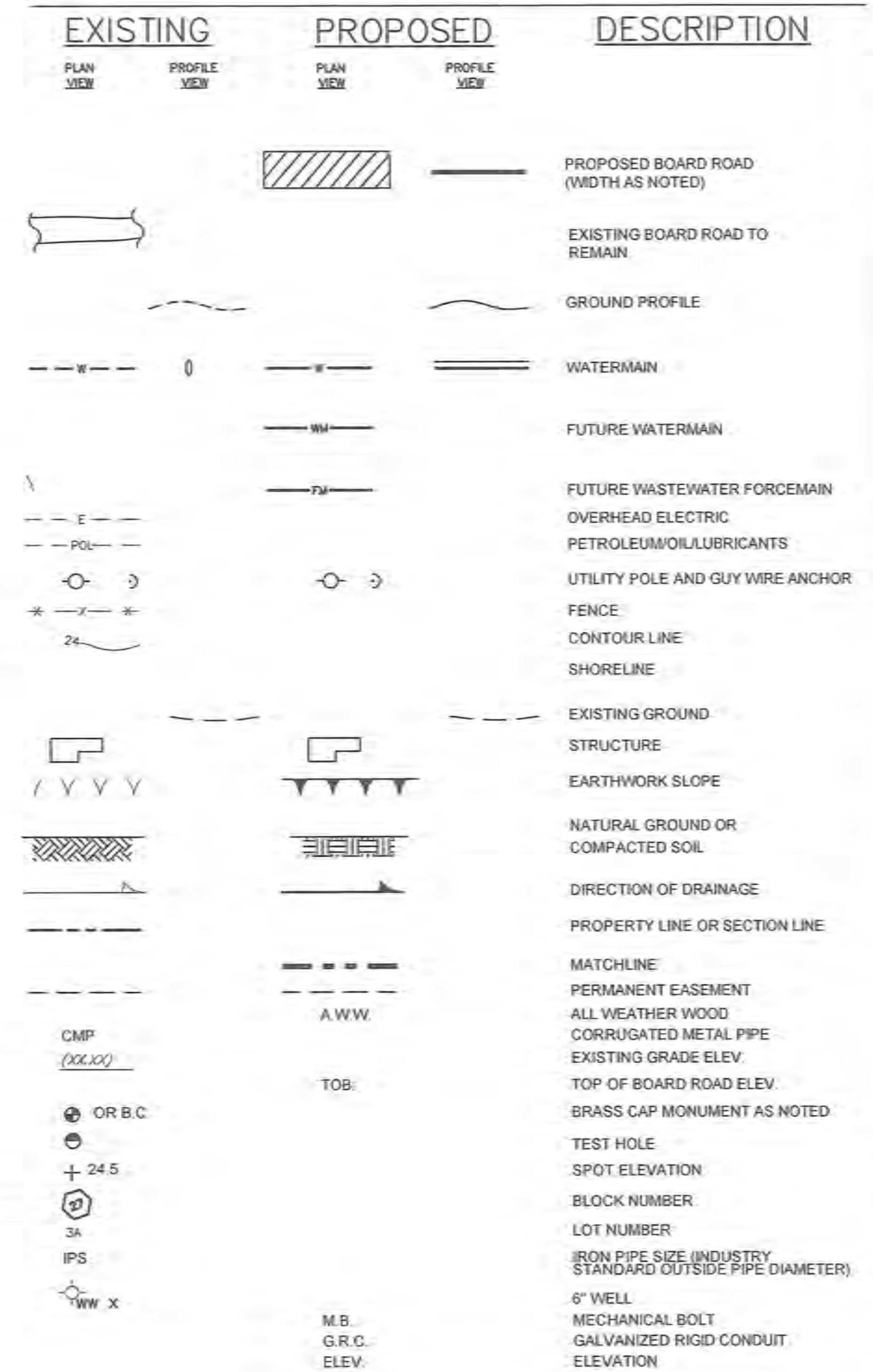

SECTION AND DETAIL DESIGNATIONS

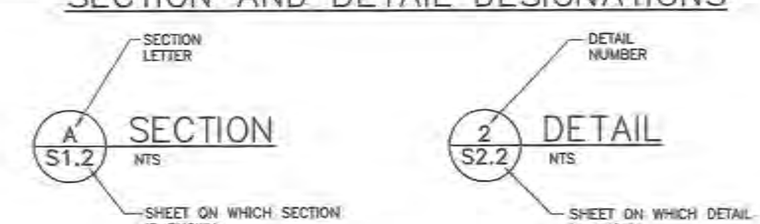

RECORD DRAWING CERTIFICATE
THESE DRAWINGS REFLECT RECORDED INFORMATION OBTAINED DURING CONSTRUCTION. INFORMATION PROVIDED HEREIN IS ACCURATE TO THE BEST OF MY KNOWLEDGE.
NAME ____ DATE ____

SCALE: AS SHOWN

CONSTRUCTION RECORD: FIELD BOOK / STAKING / FOREMAN / AS-BUILT / INSPECTOR

STATE OF ALASKA 49TH — PAUL C. WEISNER CE-10276 — REGISTERED PROFESSIONAL ENGINEER

WASHETERIA AND WATER TANK
GENERAL NOTES AND LEGEND
CHEFORNAK, ALASKA

CE2 ENGINEERS, INC.
PO BOX 232946 ANCHORAGE, AK 99523 PH: 907-349-1010 FAX: 907-349-1015

REVISION | BY | DATE

Project No. ____
Date AUG 2016
Designed ____
Drawn ____
Approved PCW

Sheet No. G4.0
SHEET ____ OF ____

G:\ACAD\CHEFORNAK\2016 Washeteria and Water Tank\G4.0 GENERAL NOTES AND LEGEND.dwg, 8/30/2016 1:19:01 PM, cmerz, \\Ce2main\LANIER MP C2050/LD520C PCL 6

EXERPT FROM GOLDER ASSOCIATES REPORT DATED OCTOBER 7, 2013, SECTION 3.0 SITE AND SUBSURFACE CONDITIONS:

THE SUBSURFACE CONDITIONS AT THE SITE WERE GENERALLY CONSISTENT BASED ON HAND PROBE DEPTHS AND THE HAND DUG TEST PITS. FROZEN SOILS, GENERALLY INTERPRETED AS THE TOP OF THE PERMAFROST, WERE ENCOUNTERED ACROSS THE SITE. IN GENERAL, THE ACTIVELY LAYER DEPTH WAS APPROXIMATELY 2 FEET. SUBSURFACE CONDITIONS GENERALLY CONSISTED OF APPROXIMATELY 1.5 FEET OF UNFROZEN ORGANIC MATERIAL (ORGANIC MAT) OVERLYING 0.5 FEET OF FROZEN ORGANIC SILT, OVERLYING FROZEN SILT. IN SOME AREAS, THE HAND PROBE AND TEST PITS ENCOUNTERED BURIED TRASH SEVERAL INCHES UNDER THE ORGANIC MAT.

HAND PROBES WERE NOT CONDUCTED WITHIN THE FOOTPRINT OF THE EXISTING ABANDONED BUILDING AT THE SITE. IT IS UNKNOWN IF THE BUILDING WAS HEATED WHEN IT WAS IN USE. INCREASED DEPTH OF THAW MAY BE PRESENT UNDER THE FOOTPRINT OF THE BUILDING.

BASED ON OUR EXPERIENCE IN CHEFORNAK AND A REVIEW OF HISTORICAL DATA, OUR FINDINGS ARE GENERALLY SIMILAR TO SUBSURFACE CONDITIONS ENCOUNTERED IN OTHER GEOTECHNICAL EXPLORATIONS.

J:\2013 Jobs\133-95062 Ce2 Chefornak Washeteria\CAD\PRODUCTION\Borehole_Location_Maps.dwg | Layout: 2 PROBE GRID | Modified: BSavikko 10/07/2013 11:29 AM | Plotted: BSavikko 10/07/2013

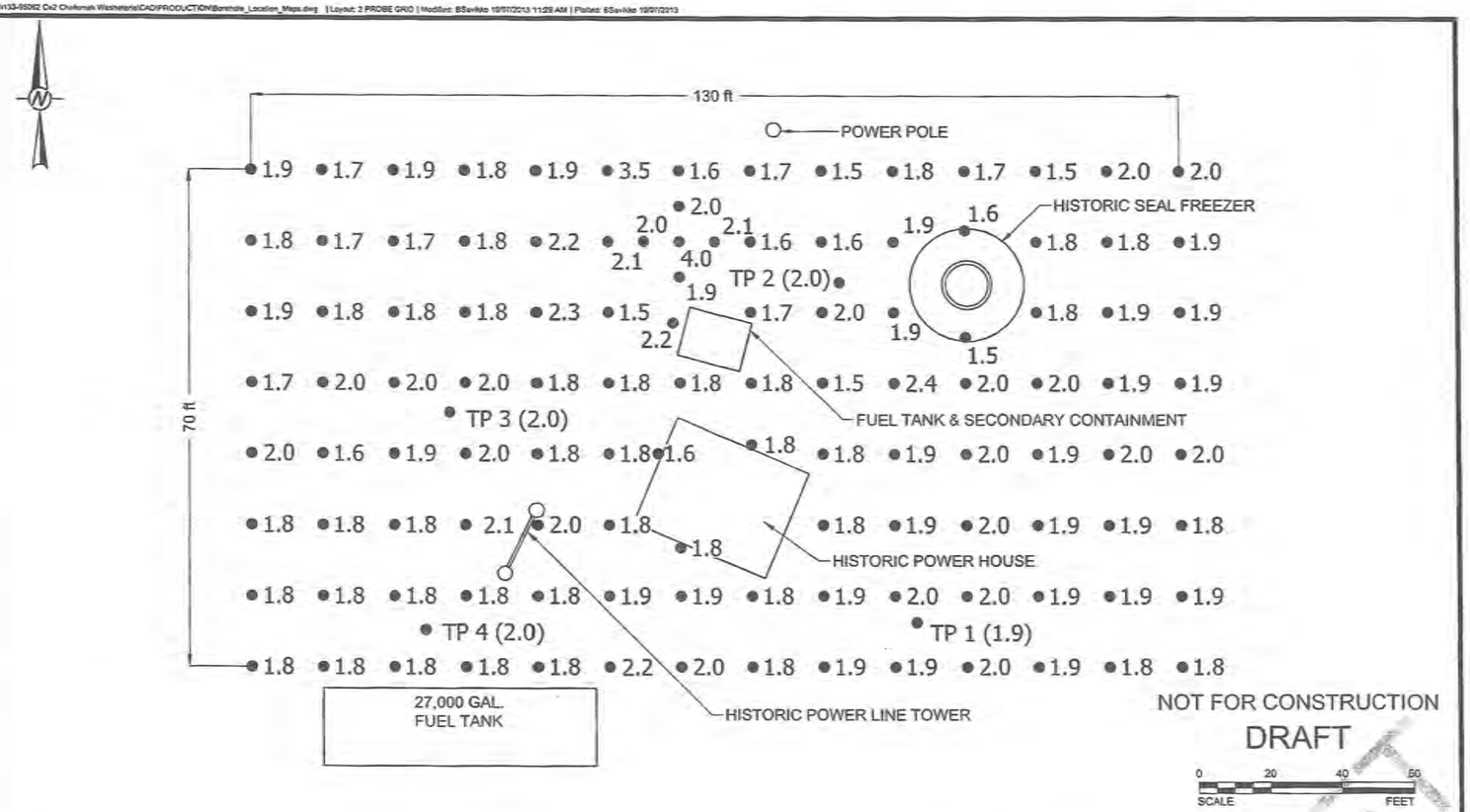

LEGEND

- ● 1.9 PROBE LOCATION IN FEET, TO REFUSAL
- ● TP (1.9) TEST PIT LOCATION IN FEET, TO REFUSAL

NOTES

1. ALL LOCATIONS ARE APPROXIMATE

PROJECT: CE2 ENGINEERS, INC. WASHETERIA CHEFORNAK, ALASKA

TITLE: PROBE GRID

Golder Associates

PROJECT No.		133-95062	FILE No.	Borehole_Location_Maps
DESIGN	XL	2013-08-21	SCALE	1"=40'
CADD	MSF	2013-08-21	FIGURE	2
CHECK	BSS	2013-10-07		
REVIEW				

RECORD DRAWING CERTIFICATE
THESE DRAWINGS REFLECT RECORDED INFORMATION OBTAINED DURING CONSTRUCTION. INFORMATION PROVIDED HEREIN IS ACCURATE TO THE BEST OF MY KNOWLEDGE.
NAME DATE

SCALE: AS SHOWN

CONSTRUCTION RECORD
FIELD BOOK
STAKING
FOREMAN
AS-BUILT
INSPECTOR

STATE OF ALASKA 49TH PAUL C. WISNER CE-10276 REGISTERED PROFESSIONAL ENGINEER

WASHETERIA AND WATER TANK
GEOTECHNICAL INFORMATION
CHEFORNAK, ALASKA

CE2 ENGINEERS, INC.
PO BOX 232948 ANCHORAGE, AK 99523 PH: 907-349-1010 FAX: 907-349-1015

REVISION	BY	DATE

Project No. ____ Date AUG 2016 Designed PCW Drawn CM Approved PCW

Sheet No. G5.0
SHEET ____ OF ____

G:\ACAD\CHEFORNAK\2016 Washeteria and Water Tank\G5.0 GEOTECHNICAL INFORMATION.dwg, 8/30/2016 1:18:25 PM, cmerz, \\Ce2main\LANIER MP C2050/LD520C PCL 6

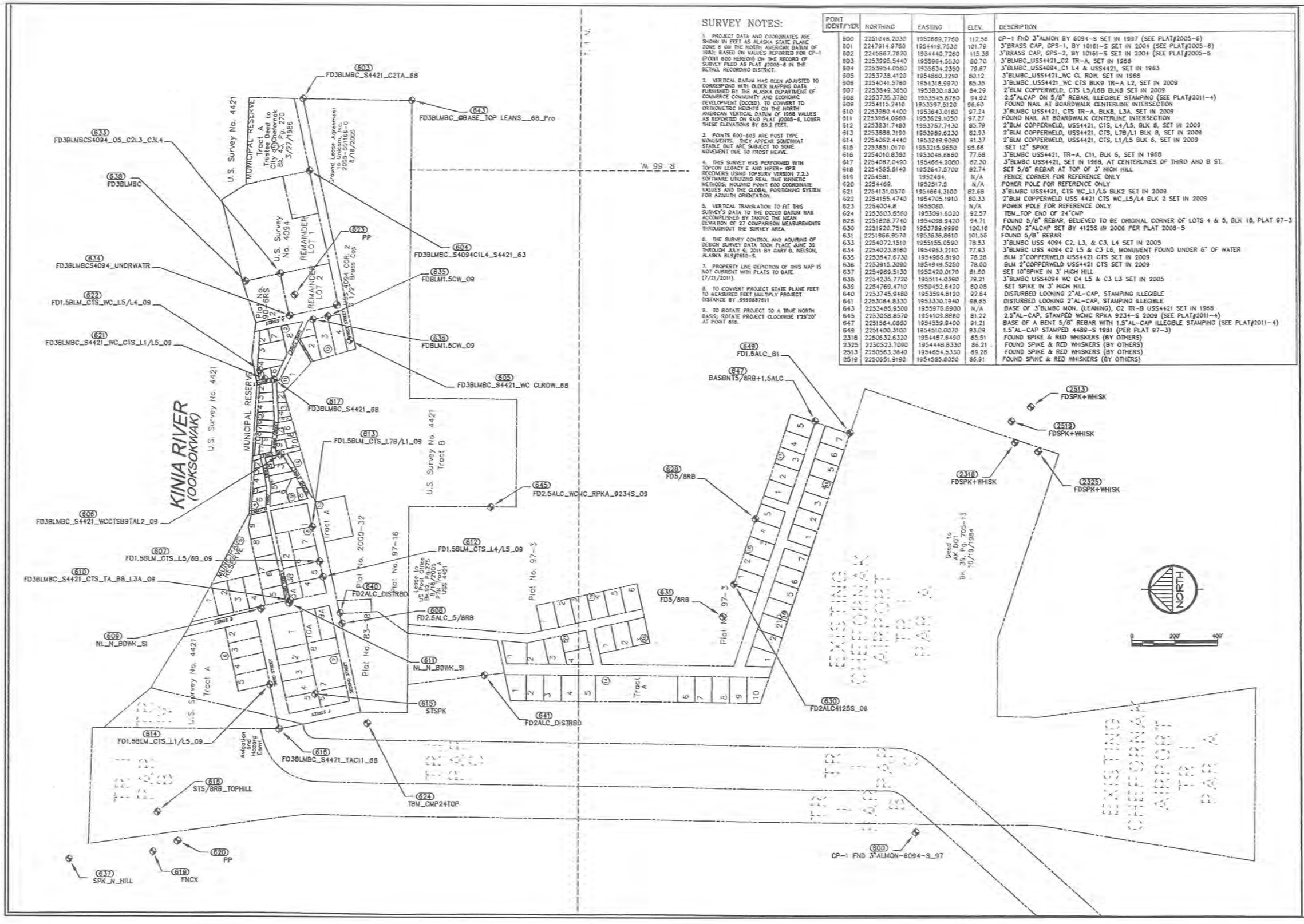

SURVEY NOTES:

1. PROJECT DATA AND COORDINATES ARE SHOWN IN FEET AS ALASKA STATE PLANE ZONE 6 ON THE NORTH AMERICAN DATUM OF 1983; BASED ON VALUES REPORTED FOR CP-1 (POINT 600 HEREON) ON THE RECORD OF SURVEY FILED AS PLAT #2005-6 IN THE BETHEL RECORDING DISTRICT.

2. VERTICAL DATUM HAS BEEN ADJUSTED TO CORRESPOND WITH OLDER MAPPING DATA FURNISHED BY THE ALASKA DEPARTMENT OF COMMERCE COMMUNITY AND ECONOMIC DEVELOPMENT (DCCED). TO CONVERT TO ORTHOMETRIC HEIGHTS ON THE NORTH AMERICAN VERTICAL DATUM OF 1988 VALUES AS REPORTED ON SAID PLAT #2005-6, LOWER THESE ELEVATIONS BY 85.2 FEET.

3. POINTS 600-603 ARE POST TYPE MONUMENTS. THEY APPEAR SOMEWHAT STABLE BUT ARE SUBJECT TO SOME MOVEMENT DUE TO FROST HEAVE.

4. THIS SURVEY WAS PERFORMED WITH TOPCON LEGACY E AND HIPER+ GPS RECEIVERS USING TOPSURV VERSION 7.2.3 SOFTWARE UTILIZING REAL TIME KINNETIC METHODS; HOLDING POINT 600 COORDINATE VALUES AND THE GLOBAL POSITIONING SYSTEM FOR AZIMUTH ORIENTATION.

5. VERTICAL TRANSLATION TO FIT THIS SURVEY'S DATA TO THE DCCED DATUM WAS ACCOMPLISHED BY TAKING THE MEAN DEVIATION OF 27 COMPARISON MEASUREMENTS THROUGHOUT THE SURVEY AREA.

6. THE SURVEY CONTROL AND ADJUSTING OF DESIGN SURVEY DATA TOOK PLACE JUNE 30 THROUGH JULY 9, 2011 BY GARY D. NELSON, ALASKA RLS#7610-S.

7. PROPERTY LINE DEPICTION OF THIS MAP IS NOT CURRENT WITH PLATS TO DATE. (7/21/2011).

8. TO CONVERT PROJECT STATE PLANE FEET TO MEASURED FEET MULTIPLY PROJECT DISTANCE BY .9999887611

9. TO ROTATE PROJECT TO A TRUE NORTH BASIS; ROTATE PROJECT CLOCKWISE 1°29'20" AT POINT 616.

POINT IDENTIFYER	NORTHING	EASTING	ELEV.	DESCRIPTION
600	2251046.2030	1952669.7760	112.56	CP-1 FND 3"ALMON BY 6094-S SET IN 1997 (SEE PLAT#2005-6)
601	2247914.9780	1954419.7530	101.79	3"BRASS CAP, GPS-1, BY 10161-S SET IN 2004 (SEE PLAT#2005-6)
602	2245867.7820	1954440.7260	115.38	3"BRASS CAP, GPS-2, BY 10161-S SET IN 2004 (SEE PLAT#2005-6
603	2253995.5440	1955964.5530	80.70	3"BLMBC_USS4421_C2 TR-A, SET IN 1958
604	2253954.0580	1955634.2350	79.87	3"BLMBC_USS4094_C1 L4 & USS4421, SET IN 1963
605	2253738.4120	1954860.3210	80.12	3"BLMBC_USS4421_WC CL ROW, SET IN 1968
606	2254041.5760	1954318.9970	85.35	3"BLMBC_USS4421_WC CTS BLK9 TR-A L2, SET IN 2009
607	2253849.3650	1953830.1830	84.29	2"BLM COPPERWELD, CTS L5/L6B BLK8 SET IN 2009
608	2253735.3780	1953545.8780	94.92	2.5"ALCAP ON 5/8" REBAR, ILLEGIBLE STAMPING (SEE PLAT#2011-4)
609	2254115.2410	1953597.5120	96.60	FOUND NAIL AT BOARDWALK CENTERLINE INTERSECTION
610	2253980.4400	1953643.0180	97.24	3"BLMBC USS4421, CTS TR-A, BLK8, L3A, SET IN 2009
611	2253984.0860	1953628.1050	97.27	FOUND NAIL AT BOARDWALK CENTERLINE INTERSECTION
612	2253831.7480	1953757.7430	95.79	2"BLM COPPERWELD, USS4421, CTS, L4/L5, BLK 8, SET IN 2009
613	2253888.3190	1953989.6230	82.93	2"BLM COPPERWELD, USS4421, CTS, L7B/L1 BLK 8, SET IN 2009
614	2254062.4440	1953249.9090	91.37	2"BLM COPPERWELD, USS4421, CTS, L1/L5 BLK 6, SET IN 2009
615	2253851.0170	1953215.9850	95.66	SET 12" SPIKE
616	2254010.8380	1953046.6660	77.68	3"BLMBC USS4421, TR-A, C11, BLK 6, SET IN 1968
617	2254087.0490	1954664.2080	82.30	3"BLMBC USS4421, SET IN 1968, AT CENTERLINES OF THIRD AND B ST.
618	2254585.8140	1952647.5700	82.74	SET 5/8" REBAR AT TOP OF 3' HIGH HILL
619	2254581.	1952464.	N/A	FENCE CORNER FOR REFERENCE ONLY
620	2254469.	1952517.5	N/A	POWER POLE FOR REFERENCE ONLY
621	2254131.0570	1954664.3100	82.68	3"BLMBC USS4421, CTS WC_L1/L5 BLK2 SET IN 2009
622	2254155.4740	1954705.1910	80.33	2"BLM COPPERWELD USS 4421 CTS WC_L5/L4 BLK 2 SET IN 2009
623	2254004.8	1955060.	N/A	POWER POLE FOR REFERENCE ONLY
624	2253803.8560	1953091.6020	92.57	TBM_TOP END OF 24"CMP
628	2251828.7740	1954096.9420	94.71	FOUND 5/8" REBAR, BELIEVED TO BE ORIGINAL CORNER OF LOTS 4 & 5, BLK 18, PLAT 97-3
630	2251920.7510	1953789.9990	100.16	FOUND 2"ALCAP SET BY 4125S IN 2006 PER PLAT 2008-5
631	2251966.9570	1953636.8610	101.56	FOUND 5/8" REBAR
633	2254072.1510	1955155.0590	78.53	3"BLMBC USS 4094 C2, L3, & C3, L4 SET IN 2005
634	2254023.8160	1954963.2110	77.93	3"BLMBC USS 4094 C2 L5 & C3 L6, MONUMENT FOUND UNDER 6" OF WATER
635	2253847.6730	1954966.8190	78.28	BLM 2"COPPERWELD USS4421 CTS SET IN 2009
636	2253915.3090	1954949.5250	78.00	BLM 2"COPPERWELD USS4421 CTS SET IN 2009
637	2254969.5130	1952420.0170	81.50	SET 10"SPIKE IN 3' HIGH HILL
638	2254235.7720	1955114.0390	79.21	3"BLMBC USS4094 WC C4 L5 & C3 L3 SET IN 2005
639	2254769.4710	1950452.6420	80.05	SET SPIKE IN 3' HIGH HILL
640	2253745.9480	1953594.8120	92.64	DISTURBED LOOKING 2"AL-CAP, STAMPING ILLEGIBLE
641	2253084.8330	1953330.1940	98.65	DISTURBED LOOKING 2"AL-CAP, STAMPING ILLEGIBLE
643	2253485.9500	1955976.6900	N/A	BASE OF 3"BLMBC MON. (LEANING), C2 TR-B USS4421 SET IN 1968
645	2253058.8570	1954103.8880	81.22	2.5"AL-CAP, STAMPED WCMC RPKA 9234-S 2009 (SEE PLAT#2011-4)
647	2251564.0860	1954559.8400	91.21	BASE OF A BENT 5/8" REBAR WITH 1.5"AL-CAP ILLEGIBLE STAMPING (SEE PLAT#2011-4)
649	2251400.3100	1954510.0070	93.09	1.5"AL-CAP STAMPED 4489-S 1981 (PER PLAT 97-3)
2318	2250632.6320	1954487.6490	85.51	FOUND SPIKE & RED WHISKERS (BY OTHERS)
2325	2250523.7090	1954448.8330	86.21	FOUND SPIKE & RED WHISKERS (BY OTHERS)
2513	2250563.3640	1954654.5330	89.28	FOUND SPIKE & RED WHISKERS (BY OTHERS)
2519	2250651.9190	1954585.8050	86.91	FOUND SPIKE & RED WHISKERS (BY OTHERS)

RECORD DRAWING CERTIFICATE

THESE DRAWINGS REFLECT RECORDED INFORMATION OBTAINED DURING CONSTRUCTION. INFORMATION PROVIDED HEREIN IS ACCURATE TO THE BEST OF MY KNOWLEDGE.

NAME DATE

SCALE: AS SHOWN

BAR IS ONE INCH ON ORIGINAL DRAWING 0 1"

IF NOT ONE INCH ON THIS SHEET, ADJUST SCALES ACCORDINGLY

CONSTRUCTION RECORD

FIELD BOOK

STAKING

FOREMAN

AS-BUILT

INSPECTOR

STATE OF ALASKA 49TH GARY D. NELSON LS 7610-S 9-30-11

SURVEY CONTROL

CHEFORNAK, ALASKA

CE2 ENGINEERS, INC.

PO BOX 220346 ANCHORAGE, AK 99522 PH: 907-349-1015 FAX: 907-349-1015

REVISION	BY	DATE

Project No. ____ Date ____ Designed ____ Drawn CM Approved GN

Sheet No. C1.0

G:\ACAD\CHEFORNAK\2016 Washeteria and Water Tank\C1.0 SURVEY CONTROL.dwg, 8/30/2016 1:16:38 PM, cmerz, \\Ce2main\LANIER MP C2050/LD520C PCL 6

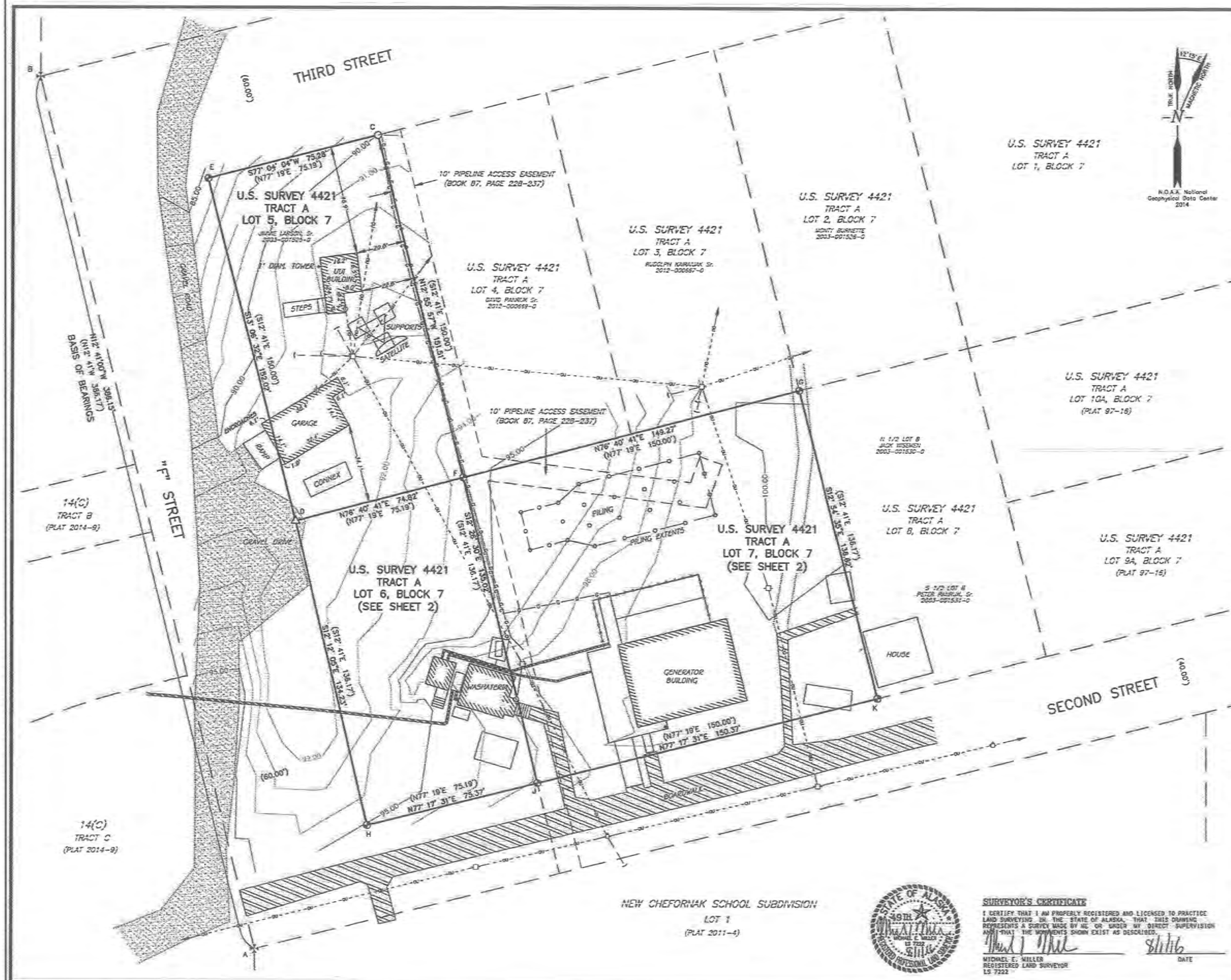

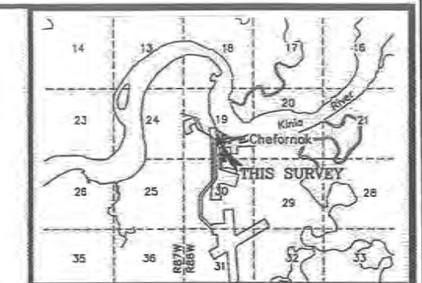

VICINITY MAP SCALE: 1"= 1 mile
USGS QUAD MAP BAIRD (A-7), 1954

LEGEND

- FOUND BRASS CAP MONUMENT
- FOUND PLASTIC CAP
- FOUND REBAR
- SET ALUMINUM CAP
- XX XX XX MEASURED DATA
- (XX XX XX) RECORD DATA PER PLAT (USS 4421)
- (C) COMPUTED
- OV OVERHEAD UTILITY LINE
- ELECTRIC METER
- UTILITY POLE
- GUY ANCHOR
- CONV TELEPHONE LINE
- G 1" DIAM. ABOVE GROUND GAS LINE
- EASEMENT LINE

SEE SHEET 2 FOR MONUMENT MARKINGS

NOTES

1. INFORMATION SHOWN HEREON BASED ON FIELD SURVEY CONDUCTED BY McLINTOCK LAND ASSOCIATES, INC MARCH 10th through 17th, 2015 AND UPDATED ON FEBRUARY, 5TH, 2016.
2. THE BEARINGS AND DISTANCES SHOWN AS MEASURED ARE ROTATED TO THE BASIS OF BEARINGS AND REDUCED TO GROUND DISTANCES.
3. THIS LOT IS SUBJECT TO ANY EASEMENTS OF RECORD.
4. THE BASIS OF COORDINATES AND ELEVATION ON THIS SURVEY IS CP-1 (PT 800) SHOWN ON THE CE2 PLAN SET FOR THE CITY OF CHEFORNAK FACULTATIVE LAGOON PROJECT SURVEY CONTROL SHEET C2.1, SIGNED BY GARY WILSON ON 9-5-11. CP-1 IS A FOUND ALUMINUM MONUMENT SET IN 1987 AND RECOVERED AND SHOWN ON PLAT 2005-8.
5. THE CONTOURS SHOWN ON THIS PLAT WAS CREATED FROM POINTS COLLECTED DURING WINTER CONDITIONS AND SHOULD BE USED AS A GUIDE ONLY. ANY DITCHES, DIP, AND/OR SMALL RISES MAY HAVE BEEN COVERED BY SNOW AND NOT COLLECTED.
6. OWNERSHIP INFORMATION IS FROM A SEARCH OF THE PUBLIC RECORD AND SHOULD BE CONFIRMED WITH A TITLE REPORT.

20 0 20 40 80
SCALE IN FEET

REVISIONS

DATE: 8-01-16	DWN: TB	UPDATED STREET NAMES AND PILING OFFSET DISTANCES
DATE: 2-10-16	DWN: TB	REMOVED BUILDINGS ON LOTS 6 & 7 AND ADDED NEW PILING

SITE PLAN SURVEY OF

LOT 5, LOT 6 AND LOT 7

BLOCK 7, TRACT A

U.S. SURVEY 4421

SITUATED WITHIN

SECTION 19, TOWNSHIP 1 NORTH, RANGE 88 WEST, SEWARD MERIDIAN, ALASKA

BETHEL RECORDING DISTRICT

PREPARED BY:	PREPARED FOR:
McLINTOCK LAND ASSOCIATES, INC. 16942 NORTH EAGLE RIVER LOOP ROAD EAGLE RIVER, ALASKA 99577 (907) 694-4499	STATE OF ALASKA – DEC 555 CORDOVA STREET ANCHORAGE, AK 99501 (907) 269-7614

PLOT: 1"=20'	CHK: MM	JOB: 15-116	DWG: SP15-116	FB NO: 277-38	
GRID: CHEFORNAK	DWN: TB	DATE: 8-1-16	DISK: J-DRIVE	SHEET: 1 OF 2	

STATE OF ALASKA 49TH MICHAEL E. MILLER LS 7222 REGISTERED LAND SURVEYOR

SURVEYOR'S CERTIFICATE

I CERTIFY THAT I AM PROPERLY REGISTERED AND LICENSED TO PRACTICE LAND SURVEYING IN THE STATE OF ALASKA, THAT THIS DRAWING REPRESENTS A SURVEY MADE BY ME OR UNDER MY DIRECT SUPERVISION AND THAT THE MONUMENTS SHOWN EXIST AS DESCRIBED.

MICHAEL E. MILLER
REGISTERED LAND SURVEYOR
LS 7222

8/1/16
DATE

RECORD DRAWING CERTIFICATE
THESE DRAWINGS REFLECT RECORDED INFORMATION OBTAINED DURING CONSTRUCTION. INFORMATION PROVIDED HEREIN IS ACCURATE TO THE BEST OF MY KNOWLEDGE.
NAME DATE

SCALE: AS SHOWN

BATON ONE INCH ON ORIGINAL DRAWING 0 1"
IF NOT ONE INCH ON THIS SHEET, ADJUST SCALES ACCORDINGLY

CONSTRUCTION RECORD
FIELD BOOK
STAKING
FOREMAN
AS-BUILT
INSPECTOR

WASHETERIA AND WATER TANK
SITE PLAN
PLAT SURVEY
CHEFORNAK, ALASKA

CE2 ENGINEERS, INC.
PO BOX 232948 ANCHORAGE, AK 99523 PH: 907-349-1019 FAX: 907-349-1015

REVISION	BY	DATE

Project No. ____ Date AUG 2016
Designed ____
Drawn ____
Approved PCW

Sheet No. C1.1
SHEET ____ OF ____

G:\ACAD\CHEFORNAK\2016 Washeteria and Water Tank\C1.1 SITE PLAN SURVEY.dwg, 8/30/2016 1:16:08 PM, cmerz, \\Ce2main\LANIER MP C2050/LD520C PCL 6

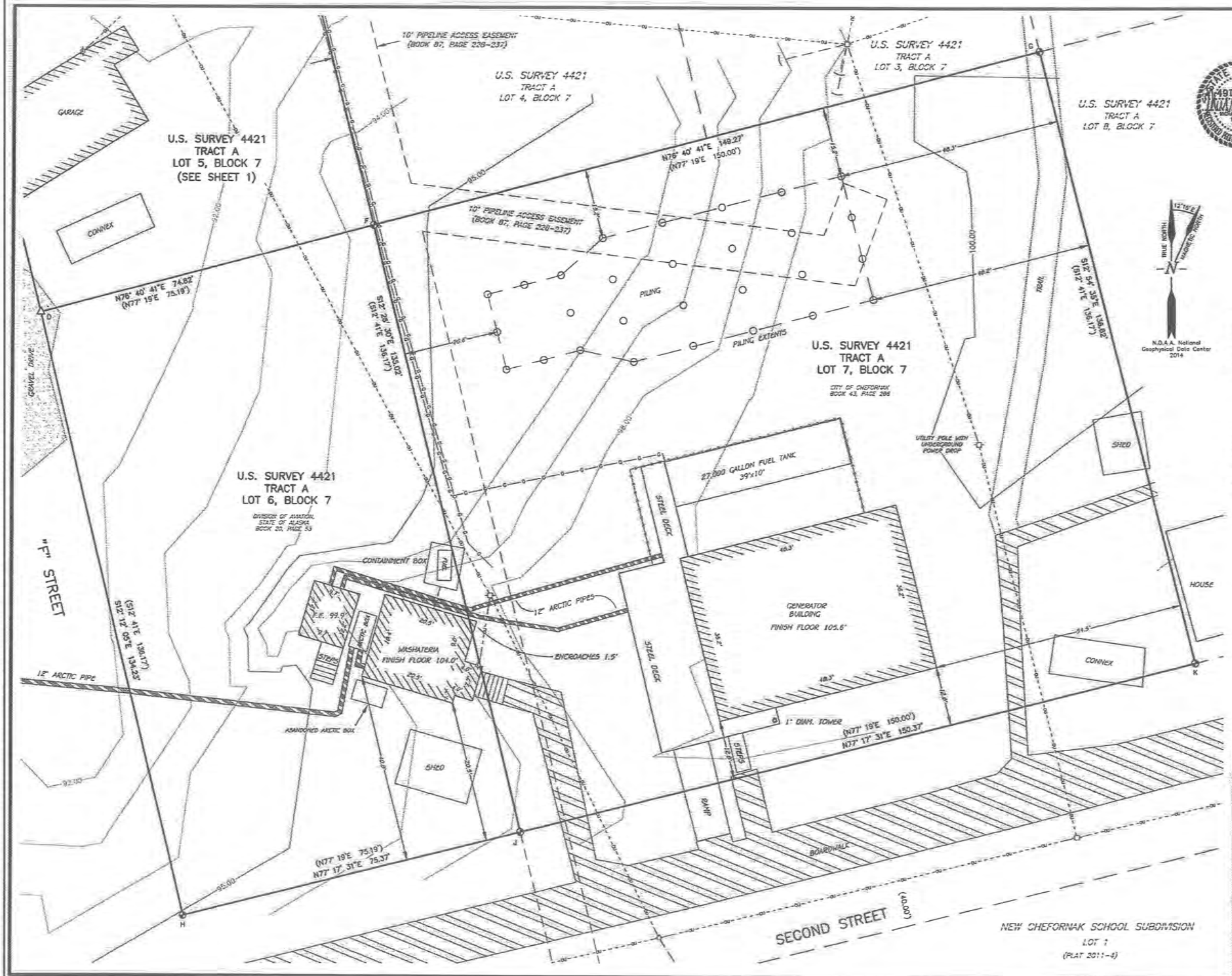

RECOVERED CORNERS

A — Found 3 1/4" brass cap 1 ins. above ground in great condition.

B — Found 3 1/4" brass cap 1 ins. above ground in good condition.

D — Found rebar in good condition.

C — Found plastic cap in good condition.

SET CORNERS

E — Set 2" aluminum cap on 5/8"x30" rebar 29" in the ground

F — Set 2" aluminum cap on 5/8"x30" rebar 31" in the ground

G — Set 2" aluminum cap on 5/8"x30" rebar 30" in the ground

H — Set 2" aluminum cap on 5/8"x30" rebar 31" in the ground

J — Set 2" aluminum cap on 5/8"x30" rebar 28" in the ground

K — Set 2" aluminum cap on 5/8"x30" rebar 32" in the ground

LEGEND

- FOUND BRASS CAP MONUMENT
- FOUND PLASTIC CAP
- FOUND REBAR
- SET ALUMINUM CAP
- XX XX XX MEASURED DATA
- (XX XX XX) RECORD DATA PER PLAT (USS 4421)
- (C) COMPUTED
- OVERHEAD UTILITY LINE
- ELECTRIC METER
- UTILITY POLE
- GUY ANCHOR
- COMM TELEPHONE LINE
- 1" DIAM. ABOVE GROUND GAS LINE
- EASEMENT LINE

10 0 10 20 30

SCALE IN FEET

REVISIONS

DATE: 8-01-16	DWN: TB	UPDATED STREET NAMES AND PILING OFFSET DISTANCES
DATE: 2-10-16	DWN: TB	REMOVED BUILDINGS ON LOTS 6 & 7 AND ADDED NEW PILING

SITE PLAN SURVEY OF

LOT 5, LOT 6 AND LOT 7

BLOCK 7, TRACT A

U.S. SURVEY 4421

SITUATED WITHIN

SECTION 19, TOWNSHIP 1 NORTH, RANGE 86 WEST, SEWARD MERIDIAN, ALASKA

BETHEL RECORDING DISTRICT

PREPARED BY:	PREPARED FOR:
McCLINTOCK LAND ASSOCIATES, INC. 16842 NORTH EAGLE RIVER LOOP ROAD EAGLE RIVER, ALASKA 99577 (907) 694-4499	*STATE OF ALASKA – DEC* 555 CORDOVA STREET ANCHORAGE, AK 99501 (907) 269-7014

PLOT: 1"=10'	CHK: MM	JOB: 15-118	DWG: SP15-118	FB NO: 277-36	
GRID: CHEFORNAK	DWN: TB	DATE: 8-1-16	DISK: J-DRIVE	SHEET: 2 OF 2	

RECORD DRAWING CERTIFICATE

THESE DRAWINGS REFLECT RECORDED INFORMATION OBTAINED DURING CONSTRUCTION. INFORMATION PROVIDED HEREIN IS ACCURATE TO THE BEST OF MY KNOWLEDGE.

NAME DATE

SCALE: AS SHOWN

IF NOT ONE INCH ON THIS SHEET, ADJUST SCALES ACCORDINGLY

CONSTRUCTION RECORD

FIELD BOOK

STAKING

FOREMAN

AS-BUILT

INSPECTOR

WASHETERIA AND WATER TANK

SITE PLAN LOT SURVEY

CHEFORNAK, ALASKA

CE2 ENGINEERS, INC.

PO BOX 220948 ANCHORAGE, AK 99522 PH: 907-349-1010 FAX: 907-349-1015

REVISION	BY	DATE

Project No. ____ Date AUG 2016 Designed ____ Drawn ____ Approved RGW

Sheet No. C1.2

SHEET ____ OF ____

G:\ACAD\CHEFORNAK\2016 Washeteria and Water Tank\C1.1 SITE PLAN SURVEY.dwg, 8/30/2016 2:05:04 PM, cmerz, \\Ce2main\LANIER MP C2050/LD520C PCL 6

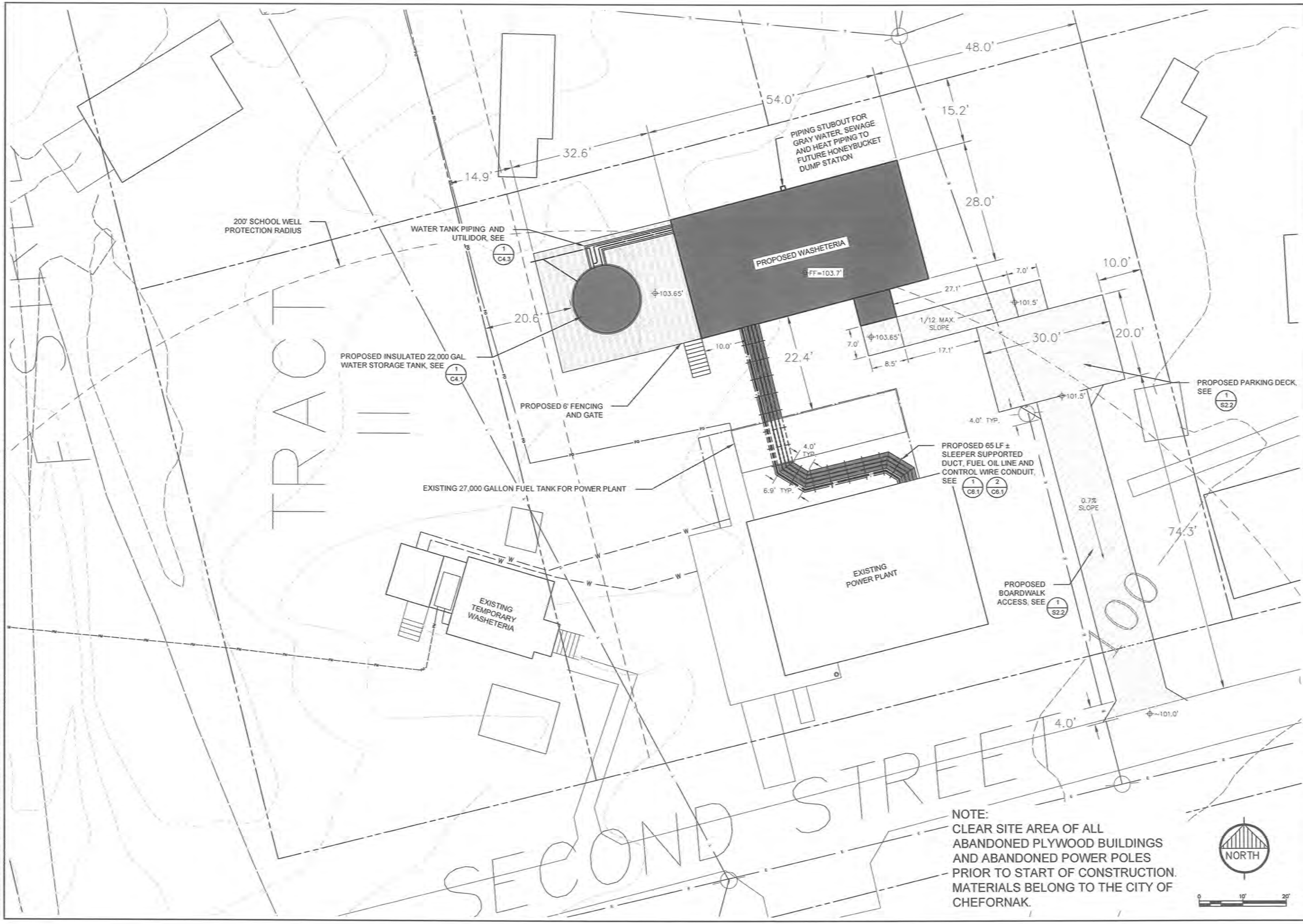

NOTE:
CLEAR SITE AREA OF ALL ABANDONED PLYWOOD BUILDINGS AND ABANDONED POWER POLES PRIOR TO START OF CONSTRUCTION. MATERIALS BELONG TO THE CITY OF CHEFORNAK.

G:\ACAD\CHEFORNAK\2016 Washeteria and Water Tank\C2.0 SITE PLAN.dwg, 8/30/2016 1:13:14 PM, cmerz, \\Ce2main\LANTER MP C2050/LD520C PCL 6

RECORD DRAWING CERTIFICATE
THESE DRAWINGS REFLECT RECORDED INFORMATION OBTAINED DURING CONSTRUCTION. INFORMATION PROVIDED HEREIN IS ACCURATE TO THE BEST OF MY KNOWLEDGE.
NAME DATE

SCALE: AS SHOWN

BAR IS ONE INCH ON ORIGINAL DRAWING
0 1"
IF NOT ONE INCH ON THIS SHEET, ADJUST SCALES ACCORDINGLY

CONSTRUCTION RECORD
FIELD BOOK
STAKING
FOREMAN
AS-BUILT
INSPECTOR

STATE OF ALASKA 49TH REGISTERED PROFESSIONAL ENGINEER PAUL C. WISNER CE-10278

WASHETERIA AND WATER TANK
PROJECT SITE PLAN
CHEFORNAK, ALASKA

CE2 ENGINEERS, INC.
PO BOX 223948 ANCHORAGE, AK 99523 PH: 907-349-1010 FAX: 907-349-1015

REVISION	BY	DATE

Project No. ____ Date AUG 2016
Designed ____ CM
Drawn ____
Approved ____ PCW

Sheet No. C2.0
SHEET ____ OF ____

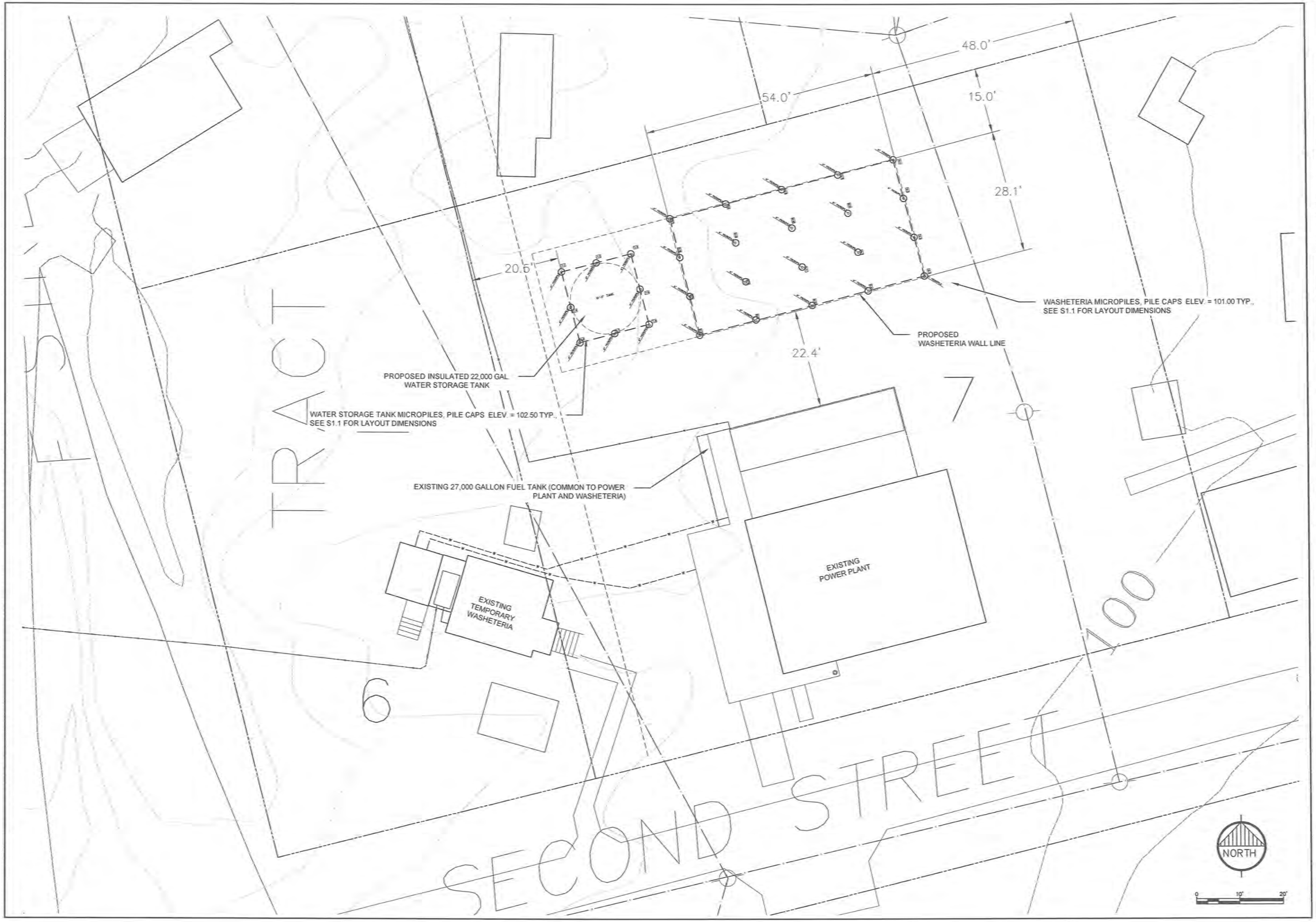

RECORD DRAWING CERTIFICATE

THESE DRAWINGS REFLECT RECORDED INFORMATION OBTAINED DURING CONSTRUCTION. INFORMATION PROVIDED HEREIN IS ACCURATE TO THE BEST OF MY KNOWLEDGE.

NAME DATE

SCALE: AS SHOWN

BAR IS ONE INCH ON ORIGINAL DRAWING

IF NOT ONE INCH ON THIS SHEET, ADJUST SCALES ACCORDINGLY

CONSTRUCTION RECORD

FIELD BOOK

STAKING

FOREMAN

AS-BUILT

INSPECTOR

STATE OF ALASKA 49TH PAUL C. WEISNER CE-10276 REGISTERED PROFESSIONAL ENGINEER

8-30-2016

WASHETERIA AND WATER TANK

FOUNDATION MICROPILES SITE PLAN

CHEFORNAK, ALASKA

CE2 ENGINEERS, INC.

PO BOX 232948 ANCHORAGE, AK 99523 PH: 907-349-1010 FAX: 907-349-1015

REVISION	BY	DATE

Project No. ____

Date AUG 2016

Designed ____

Drawn CM

Approved PCW

Sheet No. C3.0

SHEET ____ OF ____

G:\ACAD\CHEFORNAK\2016 Washeteria and Water Tank\C3.0 PILE SITE PLAN.dwg, 8/30/2016 1:11:57 PM, cmerz, \\Ce2main\LANIER MP C2050/LD520C PCL 6

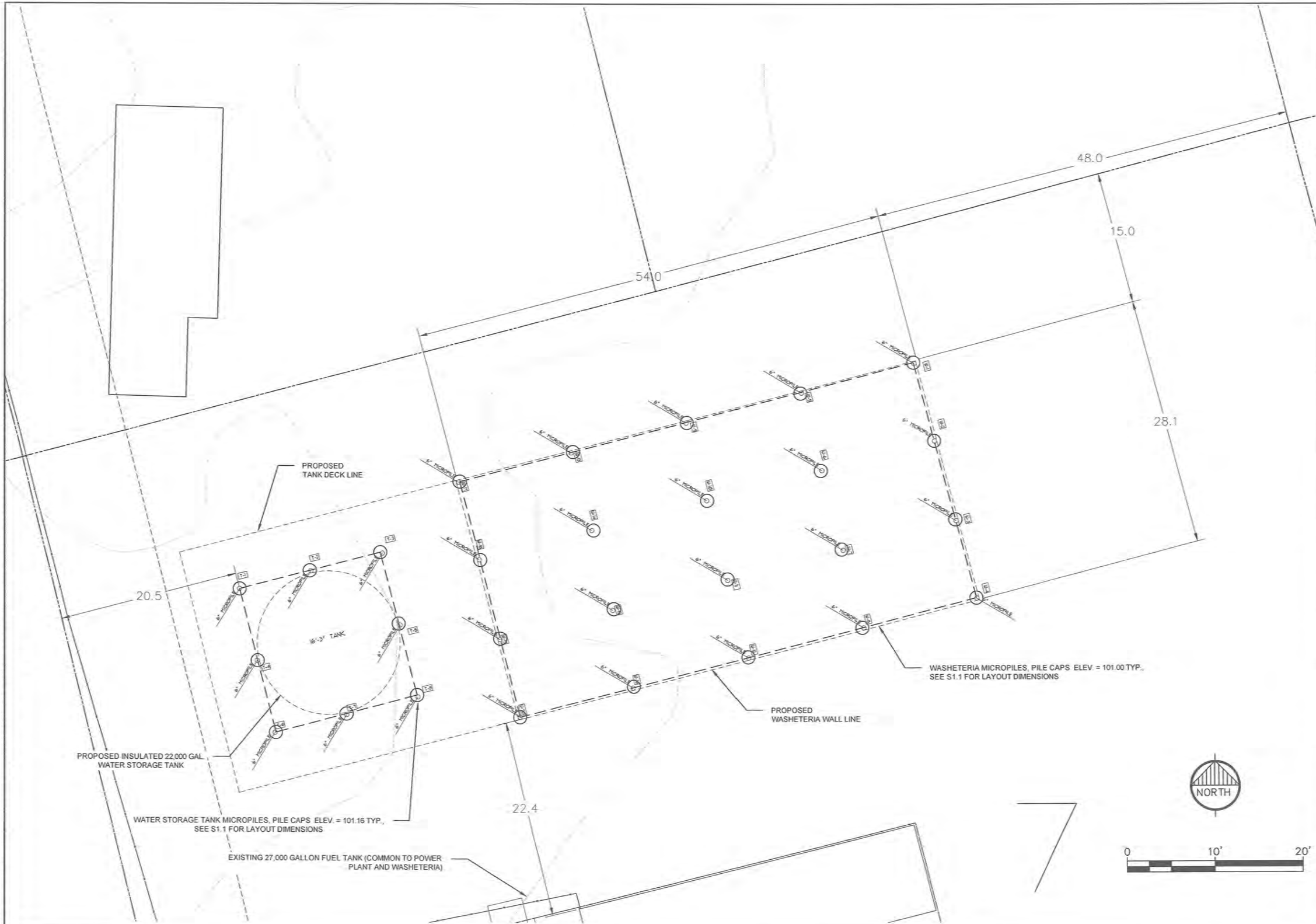

RECORD DRAWING CERTIFICATE

THESE DRAWINGS REFLECT RECORDED INFORMATION OBTAINED DURING CONSTRUCTION. INFORMATION PROVIDED HEREIN IS ACCURATE TO THE BEST OF MY KNOWLEDGE.

NAME DATE

SCALE: AS SHOWN

BARS IS ONE INCH ON ORIGINAL DRAWING

IF NOT ONE INCH ON THIS SHEET, ADJUST SCALE IS ACCORDINGLY

CONSTRUCTION RECORD

FIELD BOOK

STAKING

FOREMAN

AS-BUILT

INSPECTOR

STATE OF ALASKA 49TH PAUL C. WESNER CE-10276 REGISTERED PROFESSIONAL ENGINEER

8-30-2016

WASHETERIA AND WATER TANK

FOUNDATION MICROPILES

CHEFORNAK, ALASKA

CE2 ENGINEERS, INC.

PO BOX 22646 ANCHORAGE, AK 99523 PH: 907-349-1010 FAX: 907-349-1015

REVISION	BY	DATE

Project No. ____

Date AUG 2016

Designed ____

Drawn CM

Approved PCW

Sheet No. C3.1

SHEET ____ OF ____

G:\ACAD\CHEFORNAK\2016 Washeteria and Water Tank\C3.0 PILE SITE PLAN.dwg, 8/30/2016 1:12:19 PM, cmerz, \\Ce2main\LANIER MP C2050/LD520C PCL 6

ACCESSORY ORIENTATION CHART

ITEM	SERVICE	SIZE	REF. DEGREE	RADIUS	ELEVATION FROM BOTTOM FLANGE OF SIDE STAVE TO CENTERLINE OF ACCESSORY
1	NOZZLE PAIR	3" / 2"	0°	7'-8 5/16"	1'-0"
2	SHELL MANWAY	30" Ø I.D.	135°	7'-8 5/16"	2'-6"
3	ROOF HATCH	24" SQ. HATCH	135°	4'-8 5/16" (TO HATCH CENTER)	ON TANK ROOF
4	FROST FREE ROOF VENT	20" Ø I.D.	CENTER	CENTER	ON TANK ROOF
5	LADDER, SAFTEY CAGE, LOCKING BOTTOM LID	–	90°	7'-8 5/16"	–
6	INTERNAL OVERFLOW PIPE, FLANGED SPOOL	4" Ø SCH 40 S.S., 1'L	315°	–	1'-0"
7					

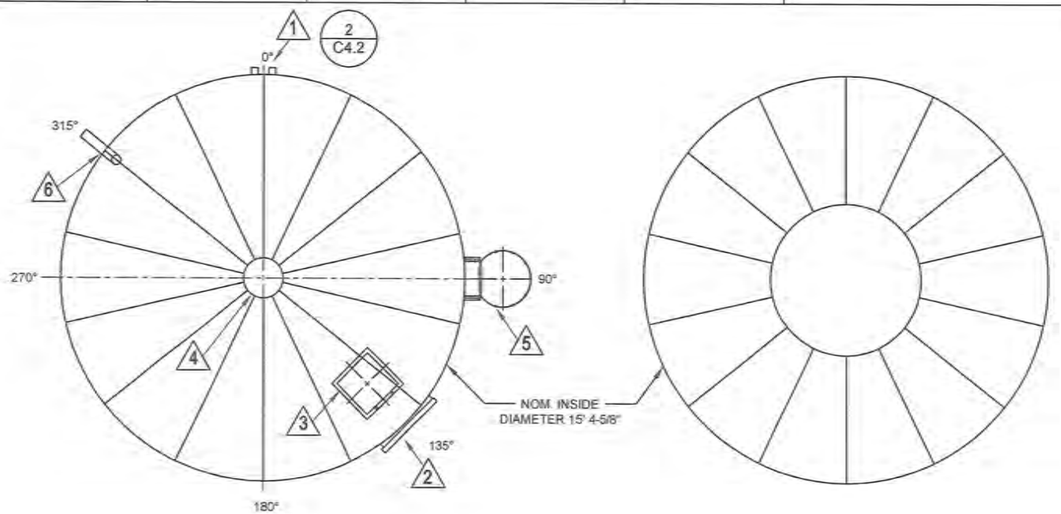

1 / C4.1 WATER TANK DECK PLAN
NOT TO SCALE

DESIGN CRITERIA

NOMINAL TANK CAPACITY:	22,000 GALLONS
MAXIMUM DEPTH OF WATER (TOP OF OVERFLOW):	15 FT-6 INCHES
MINIMUM DEPTH OF WATER (VORTEX BREAKER):	0 FT-3 INCHES
ACTUAL TANK CAPACITY:	21,200 GALLONS
TANK WALL HEIGHT:	16 FT-1 IN
NOMINAL TANK DIAMETER:	15 FT-4-5/8 IN
FOUNDATION TYPE:	ENGINEERED STEEL DECK ATOP MICROPILE FOUNDATION (BY OTHERS)
SEISMIC DESIGN / IMPORTANCE FACTOR:	SITE CLASS D SEISMIC DESIGN CATEGORY D $S_S = 0.108G$ $S_1 = 0.06G$ $SD_S = 0.116$ SD1=0.09 I = 1.0
SNOW LOAD / IMPORTANCE FACTOR:	40-LBS/SQ FT ROOF / 1.0
WIND LOAD / IMPORTANCE FACTOR:	130 MPH (3 SECOND GUST) EXPOSURE C / 1.0
NUMBER OF 30-INCH DIA SHELL MANWAYS:	1 REQUIRED
ROOF MANWAYS:	1 EACH REQUIRED, 24" SQUARE HINGED DECK
OUTSIDE TANK LADDER AND HANDRAIL	REQUIRED, POSITION AS SHOWN ON SHEET C4.1
COATING SYSTEM:	AWWA - APPROVED POWDER COATING SYSTEM OR THERMALLY CURED EPOXY PAINT PER SPECS.
CENTER VENT TYPE:	CENTER DECK FROST FREE SCREENED VENTILATION WITH STAINLESS STEEL BIRD SCREEN

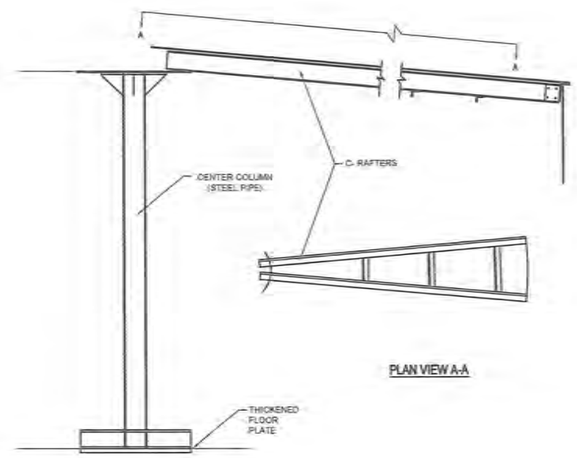

3 / C4.1 CENTER SUPPORT DETAIL
NOT TO SCALE

SHEET NOTES:

1. ORIENT ACCESSORIES AS SHOWN. IF CONFLICT ARISES WITH STAVE VERTICAL SEAMS, CONTACT ENGINEER FOR RESOLUTION.
2. TANK TO MEET AWWA-D 103-09 STANDARDS.
3. A ROLLED TAPERED PANEL (RTP) TYPE TANK IS ALSO ACCEPTABLE.
4. TANK SHALL BE POWDER COATED (OR OTHER AWWA APPROVED COATING) CARBON STEEL w/ INTERIOR COATING MEETING NSF-61, STANDARD.
5. ALL NOZZLES, FLANGES, SUPPORTS AND INTERNAL PIPE SHALL BE STAINLESS STEEL TYPE 304L.
6. ALL FLANGED CONNECTIONS SHALL MEET THE STANDARD REQUIREMENTS OF AWWA C228, CLASS D.
7. TANK WILL BE INSULATED WITH 6" FOAM INSULATION TOP (DOUBLE DECK) AND ON SIDES (THERMACON OR EQUAL). INCLUDING MANHOLE AND TANK DRAIN PIPE INSULATION COVERS. BOTTOM INSULATION SHALL BE 3 LAYERS OF 2" THICK EXTRUDED POLY STYRENE FOAM BOARD (DOW STYROFOAM HIGHLOAD 40 OR EQUAL). STAGGER INSULATION JOINTS.
8. PROVIDE OSHA COMPLIANT LADDER AND GUARDRAILS WITH TYPE 304L SS CONSTRUCTION.
9. TANK VENT SHALL BE CONSTRUCTED OF TYPE 304L SS, BE OF FROST FREE DESIGN AND SCREENED WITH #4 STAINLESS STEEL MESH.
10. SEALANTS AND GASKETS SHALL MEET NSF-61 STANDARD.
11. ALL PIPE CONNECTIONS SHALL MEET AWWA D103-09 TABLES AT A MINIMUM FOR DISPLACEMENT. SEE SECTION 14.4.
12. ROOF AND STAVE LAYOUT WILL BE SET BY TANK FABRICATOR TO AVOID CONFLICTS WITH BOLTED ON ACCESSORIES.

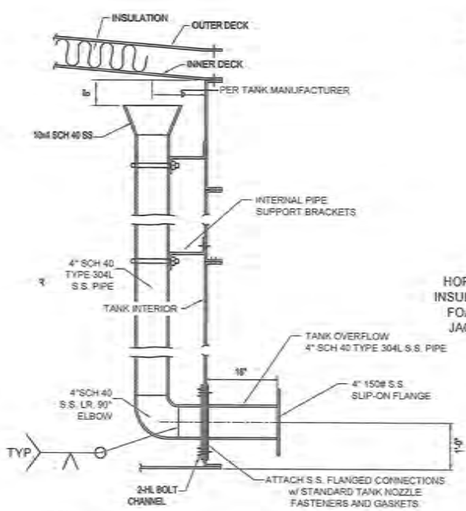

4 / C4.1 INTERNAL OVERFLOW WEIR 6
NOT TO SCALE

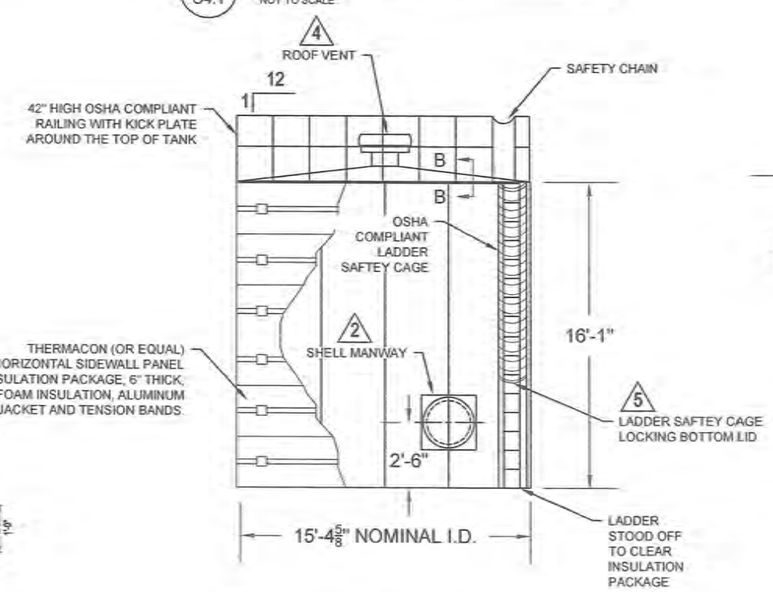

2 / C4.1 WATER TANK BOTTOM PLAN
NOT TO SCALE

A / C4.1 WATER TANK ELEVATION
NOT TO SCALE

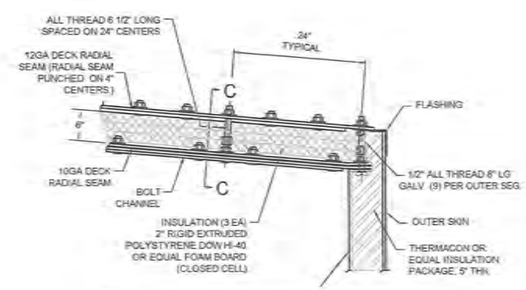

B / C4.1 SECTION B-B
NOT TO SCALE

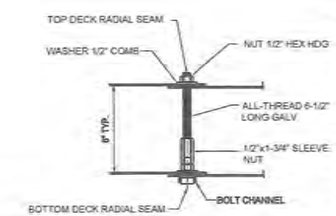

C / C4.1 SECTION C-C
NOT TO SCALE

TANK MANUFACTURE SUPPLIED ITEMS

RECORD DRAWING CERTIFICATE
THESE DRAWINGS REFLECT RECORDED INFORMATION OBTAINED DURING CONSTRUCTION. INFORMATION PROVIDED HEREIN IS ACCURATE TO THE BEST OF MY KNOWLEDGE.
NAME DATE

SCALE: AS SHOWN

CONSTRUCTION RECORD
FIELD BOOK
STAKING
FOREMAN
AS-BUILT
INSPECTOR

STATE OF ALASKA 4931 PAUL C. WEBNER CE-10276 REGISTERED PROFESSIONAL ENGINEER

WASHETERIA AND WATER TANK
WATER TANK PLAN, ELEVATIONS, AND DETAILS FOR TANK MFGR
CHEFORNAK, ALASKA

CE2 ENGINEERS, INC.
PO BOX 220589 ANCHORAGE, AK 99522 PH: 907-349-1019 FAX: 907-349-1015

REVISION	BY	DATE

Project No. ____ Date AUG 2016
Designed PCW
Drawn CM
Approved PCW

Sheet No. C4.1
SHEET ____ OF ____

G:\ACAD\CHEFORNAK\2016 Washeteria and Water Tank\C4.1 C4.2 WATER TANK.dwg, 8/30/2016 1:11:13 PM, cmerz, \\Ce2main\LANIER MP C2050/LD520C PCL 6

VENT

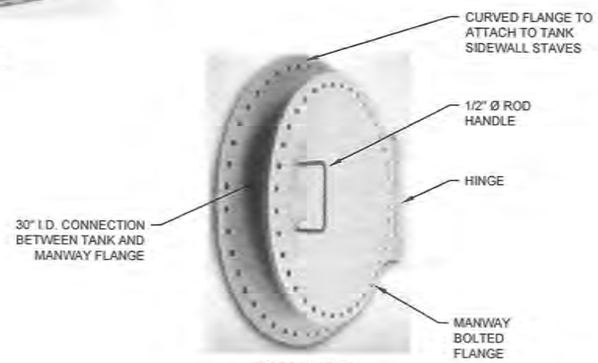

MANWAY

1 / C4.2 TANK SHELL MANWAY & FROST FREE TANK VENT

NOT TO SCALE

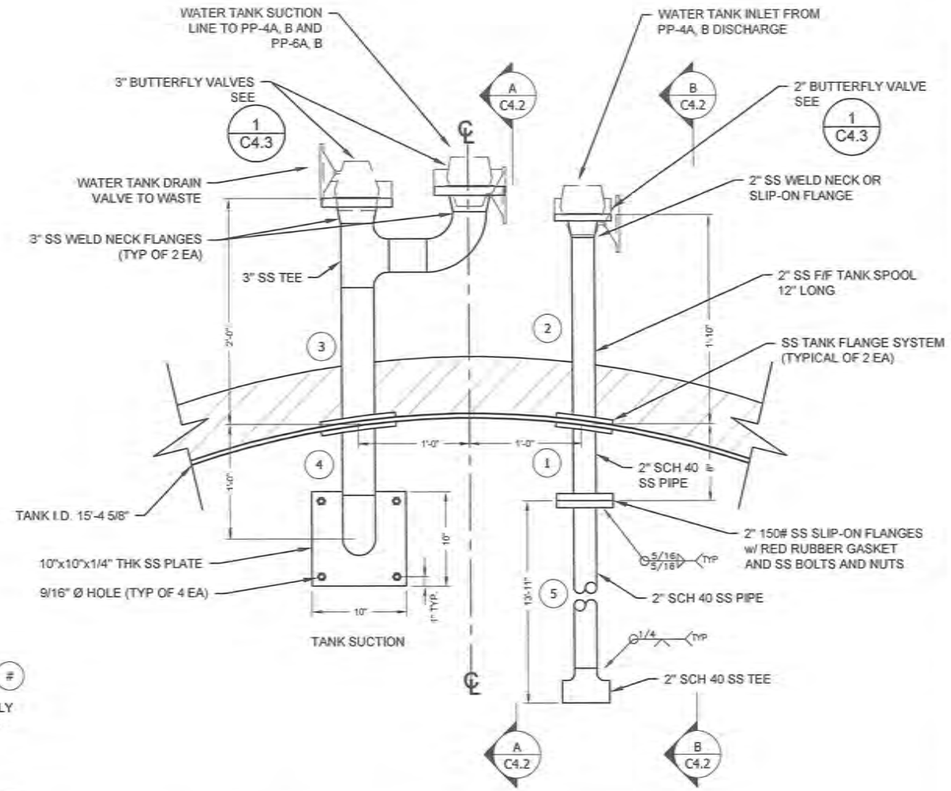

2 / C4.2 WATER TANK PIPE MANIFOLDS AND FLANGES

NOT TO SCALE

NOTES:

1. ALL PIPE SPOOL NUMBERS ARE DESIGNATED BY THE FOLLOWING: (#)
2. ALL MATERIALS, EXCEPT BUTTERFLY VALVES, TO BE SUPPLIED BY TANK MANUFACTURE.
3. TANK SPOOL FLANGES TO BE CONSTRUCTED TO AWWA REQUIREMENTS, AND SUPPLIED WITH TANK BOLTS, NUTS AND NSF-61 GASKETS. ALL OTHER FLANGES SHALL BE 150# PATTERN TYPE 304 STAINLESS STEEL, WELD NECK OR SLIP FLANGE, AS APPROPRIATE, BY TANK MANUFACTURE.
4. ALL PIPES AND FITTINGS SHALL BE SCH 40 TYPE 304L STAINLESS STEEL.
5. STEEL PLATE AND SHAPES SHALL BE TYPE 304L STAINLESS STEEL.
6. ALL TANK OPENINGS SHALL BE REINFORCED IN ACCORDANCE WITH API 650, FIG 5.8 AND TABLE 5-6B.
7. ALL PIPING SHALL BE ASTM A312, TYPE 304L, 40S.
8. ALL FITTINGS SHALL BE ASTM A403, GRADE WP, CLASS S OR CLASS WX.
9. ALL THROUGH-TANK PIPING CONNECTIONS SHALL BE FLANGED.
10. ALL PIPE ELBOWS SHALL BE LONG-RADIUS (1.5 PIPE DIAMETERS).

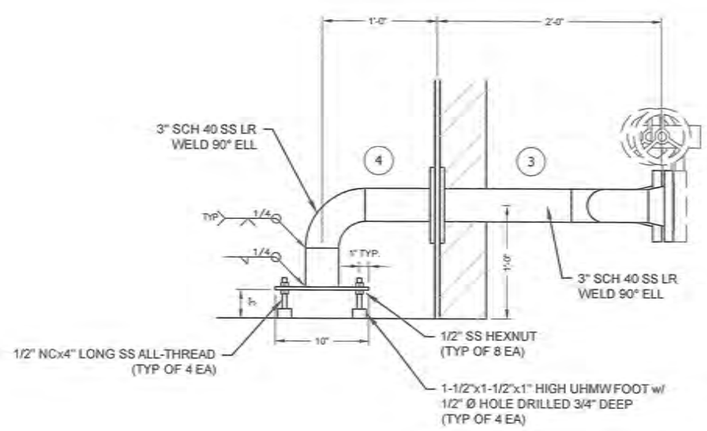

A / C4.2 3" DRAIN PIPE AND SUCTION DETAIL

NOT TO SCALE (4) (3)

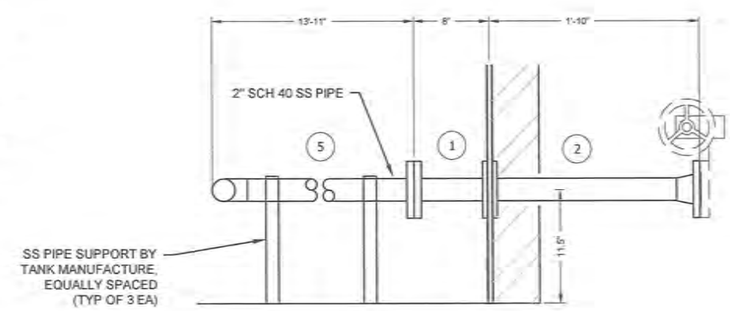

B / C4.2 2" TANK FILL PIPE

NOT TO SCALE (5) (1) (2)

TANK MANUFACTURE SUPPLIED ITEMS

RECORD DRAWING CERTIFICATE
THESE DRAWINGS REFLECT RECORDED INFORMATION OBTAINED DURING CONSTRUCTION. INFORMATION PROVIDED HEREIN IS ACCURATE TO THE BEST OF MY KNOWLEDGE.
NAME DATE

SCALE: AS SHOWN

CONSTRUCTION RECORD
FIELD BOOK
STAKING
FOREMAN
AS-BUILT
INSPECTOR

STATE OF ALASKA 49TH PAUL C. WEBNER CE-10276 REGISTERED PROFESSIONAL ENGINEER 8/30/2016

WASHETERIA AND WATER TANK
WATER TANK DETAILS FOR TANK MFGR
CHEFORNAK, ALASKA

CE2 ENGINEERS, INC.
PO BOX 232066 ANCHORAGE, AK 99523 PH: 907-349-1010 FAX: 907-349-1015

REVISION	BY	DATE

Project No. ____ Date AUG 2016 Designed PCW Drawn CM Approved RCW

Sheet No. C4.2
SHEET ____ OF ____

G:\ACAD\CHEFORNAK\2016 Washeteria and Water Tank\C4.1 C4.2 WATER TANK.dwg, 8/30/2016 1:10:53 PM, cmerz, \\Ce2main\LANIER MP C2050/LD520C PCL 6

MATERIAL LIST

1. 4" SCH 40 SS TANK NOZZLE FLANGED, SEE TANK OVERFLOW ASSEMBLY, SHEET C4.2
2. 4" HDPE SDR 17 FLANGE ADAPTER, DI BACKUP RING, 6" X 1/8" RED RUBBER GASKET FOR 150# FLANGE. AND SS BOLTS AND NUTS FOR FLANGE ASSEMBLY
3. 6X4 HDPE SDR 17 REDUCER
4. 6" HDPE SDR 17 HDPE PIPE
5. 6" HDPE SDR 17 WYE BRANCH
6. 6" HDPE SDR 17 90 DEG EL
7. 6" X 3" HDPE SDR 17 REDUCER, CONSISTING OF 6"X4" SDR 17 BUTT FUSED REDUCER AND 4"X3" SDR17 BUTT FUSED REDUCER
8. 3" HDPE SDR 17 FLANGE ASSEMBLY: 2 EA DI BACKUP RING, 2 EA HDPE FLANGE PUPS, 6" 150# FLANGE X 1/8" THK RED RUBBER GASKET, SS BOLTS AND NUTS
9. 3" HDPE SDR 17 HDPE PIPE
10. 3" HDPE SDR 17 HDPE MOLDED 90 DEG EL
11. 3" BRAY SERIES 31 BUTTERFLY VALVES WITH EPDM SEALS, STAINLESS STEEL SHAFTS AND WAFER BODY WITH GEARED HANDWHEEL OPERATOR.CONNECT TO PIPES WITH 3" 150# FLANGE PATTERN X 3" ID X 1" THICK UHMW FLANGE SPACER, 3" 150# FLANGE PATTERN RED RUBBER GASKET X1/8" THK, 3" SDR11 HDPE FLANGE PUP, DI BACKING RING, FLANGE BOLTS
12. 2" BRAY SERIES 31 BUTTERFLY VALVE WITH EPDM SEALS, STAINLESS STEEL SHAFTS AND WAFER BODY WITH GEARED HANDWHEEL OPERATOR. CONNECT TO PIPES WITH 2" 150# FLANGE PATTERN X 2" ID X 1" THICK UHMW FLANGE SPACER, 2" 150# FLANGE PATTERN RED RUBBER GASKET X1/8" THK, 2" SDR11 HDPE FLANGE PUP, DI BACKING RING, FLANGE BOLTS
13. 2" HDPE SDR11 PIPE
14. 2" HDPE SDR 11 HDPE MOLDED 90 DEG EL
15. 2" WIDE x 3/16" THK ALUMINUM FLANGE AT TOP OF 3/16" ALUMINUM VALVE BOX
16. 4" THK RIGID FOAM INSULATION, (2 EA) 2" THICK LAYERS BOTTOM, TOP, AND SIDES
17. SPRAY FOAM ALL VOIDS BETWEEN TANK AND ALUMINUM VALVE BOX

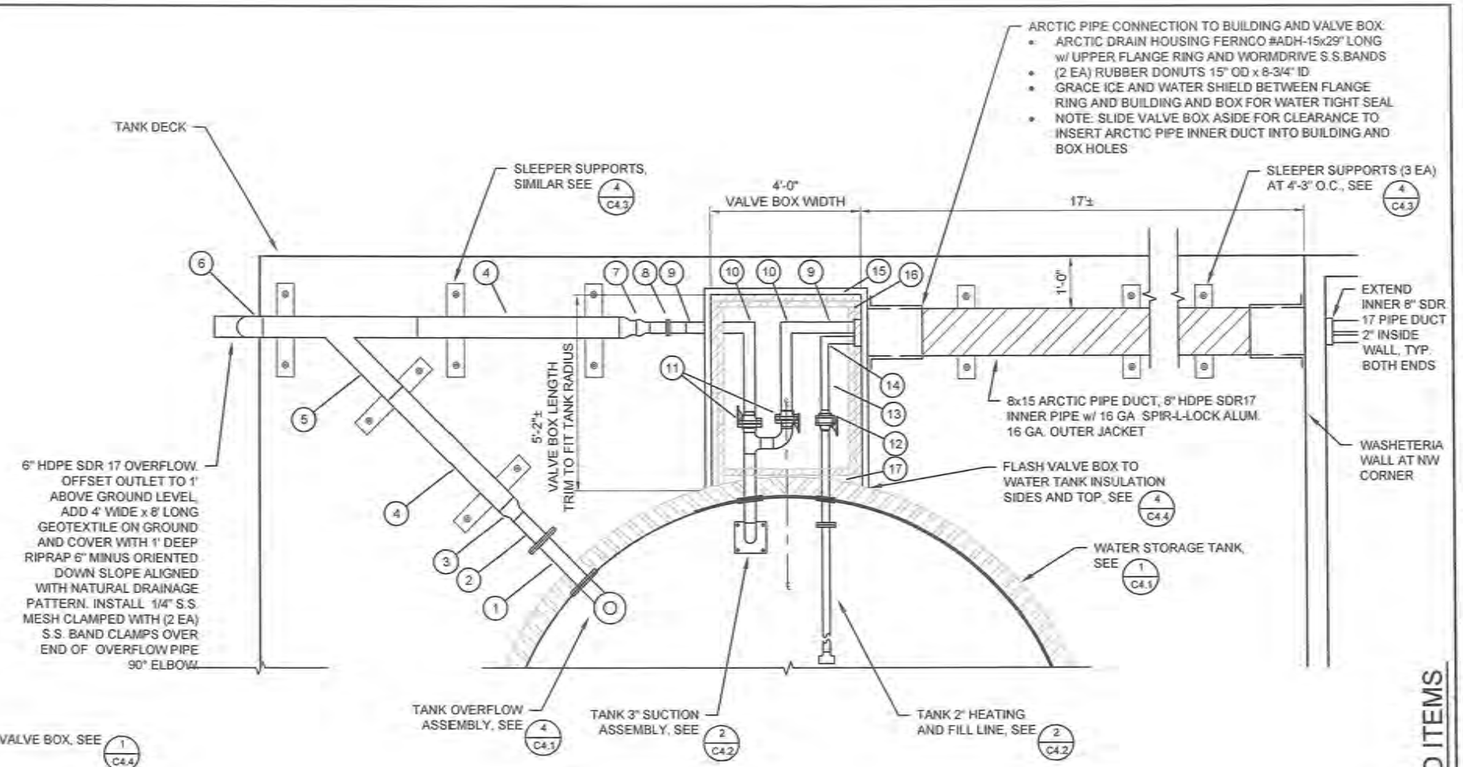

1/C4.3 WATER TANK PIPING PLAN

SCALE: 1/2" = 1'-0"

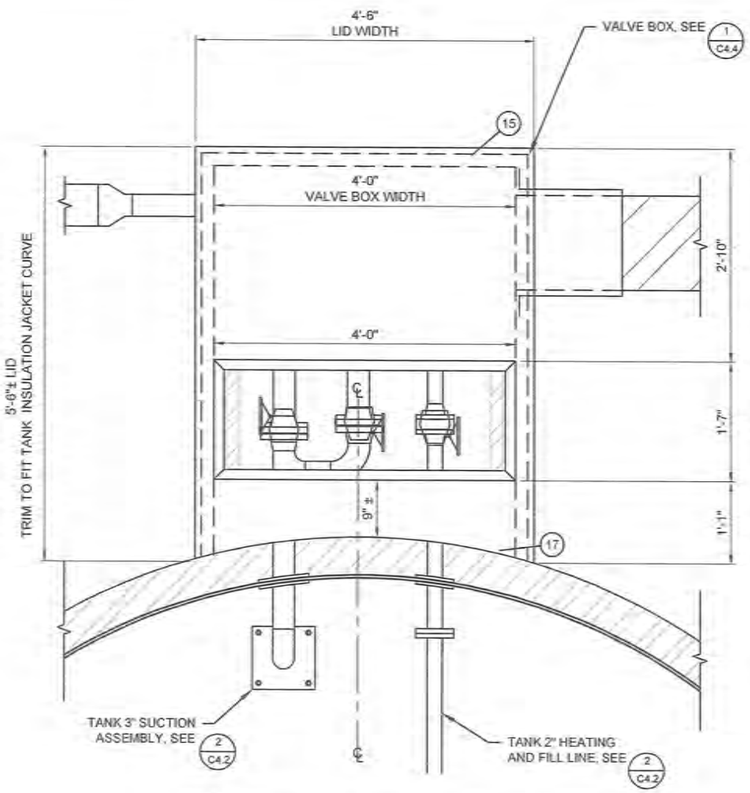

2/C4.3 WATER TANK VALVE BOX PLAN

SCALE: 1" = 1'-0"

NOTES:

1. FASTEN GASKETING TO TOP OF HORIZONTAL BOX FLANGES USING ADHESIVE-BACKED SILICONE FOAM STRIPS, 2" WIDE x 1/8" THICK, McMASTER-CARR #1279N1 (10 FT LONG STRIP)
2. FASTEN HATCHES TO FLANGES WITH:
   - 3/8"- NC x 2" LONG GALV. HEX BOLT, FULL THREAD
   - 3/8" METAL BONDED SEALING WASHER NEOPRENE w/ HD GALV. STEEL. McMASTER-CARR #94708A414 (1 EA TOP, 1 EA BOTTOM)
   - 3/8" - NC GALV. HEX NUT
   - MAX SPACING 1'-0" O.C. MAX. DISTANCE FROM ENDS OF FLANGES 3"

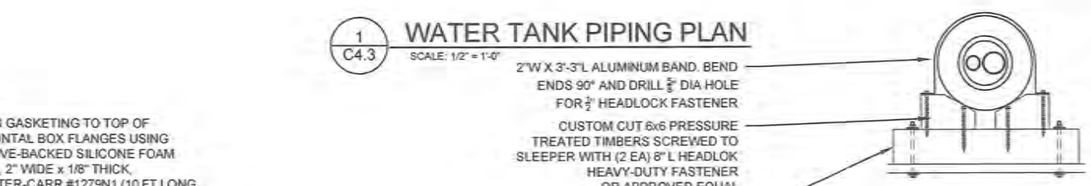

4/C4.3 PIPE SUPPORT

NOT TO SCALE

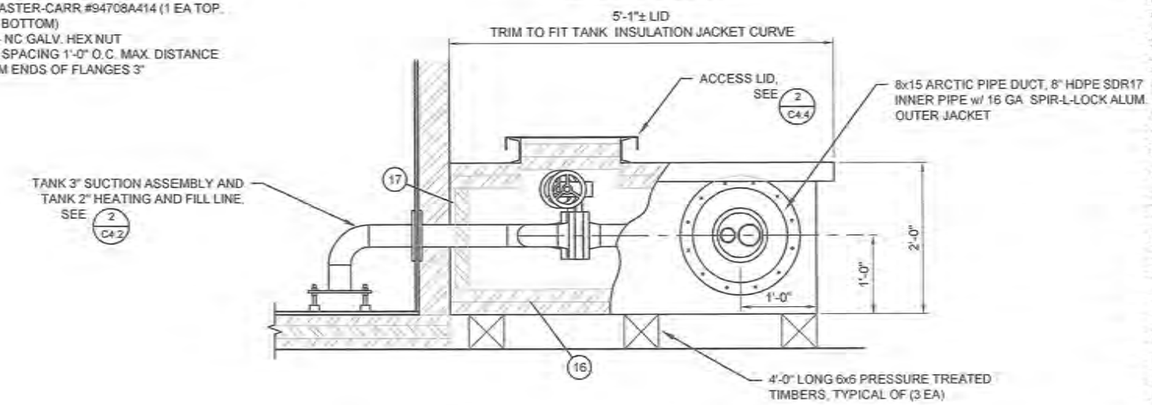

3/C4.3 WATER TANK VALVE BOX ELEVATION / SECTION

NOT TO SCALE

SEE SHEET C4.1 AND C4.2 FOR TANK MANUFACTURE SUPPLIED ITEMS

RECORD DRAWING CERTIFICATE
THESE DRAWINGS REFLECT RECORDED INFORMATION OBTAINED DURING CONSTRUCTION. INFORMATION PROVIDED HEREIN IS ACCURATE TO THE BEST OF MY KNOWLEDGE.
NAME DATE

SCALE: AS SHOWN

CONSTRUCTION RECORD
FIELD BOOK
STAKING
FOREMAN
AS-BUILT
INSPECTOR

STATE OF ALASKA 49 TH PAUL C. WISNER CE-10276 REGISTERED PROFESSIONAL ENGINEER

WASHETERIA AND WATER TANK

WATER TANK PIPING AND VAVLE BOX

CHEFORNAK, ALASKA

CE2 ENGINEERS, INC.
PO BOX 22096 ANCHORAGE, AK 99502 PH: 907-349-1015 FAX: 907-349-1015

REVISION	BY	DATE

Project No. ____ Date AUG 2016 Designed PCW Drawn CM Approved PCW

Sheet No: C4.3
SHEET ____ OF ____

G:\ACAD\CHEFORNAK\2016 Washeteria and Water Tank\C4.3 WATER TANK Utilidor.dwg, 8/30/2016 2:13:33 PM, cmerz, \\Ce2/main\LANIER MP C2050/LD520C PCL 6

NOTES:

1. ALL BOX MATERIALS SHALL BE 5052-H32 3/16" THICK ALUMINUM PLATE, U.N.O.

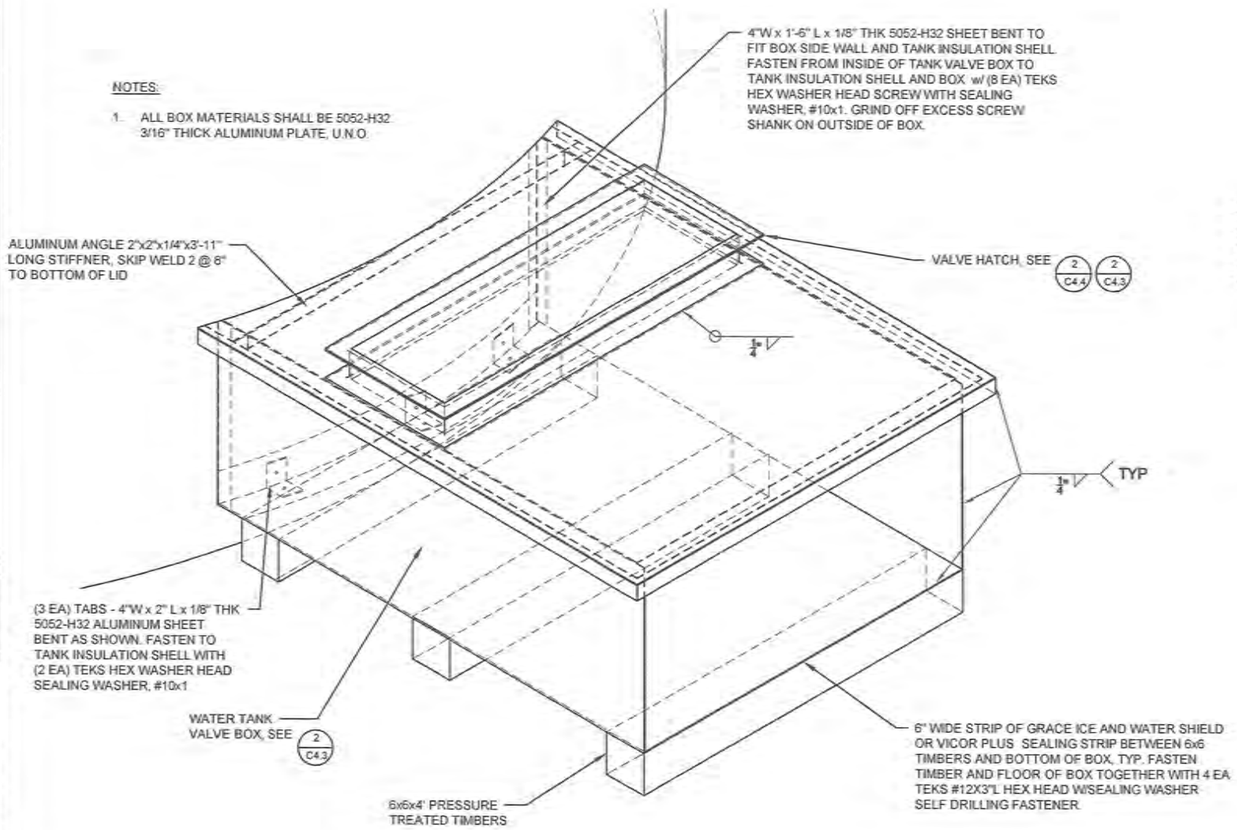

1/C4.4 TANK VALVE BOX DETAIL
NOT TO SCALE

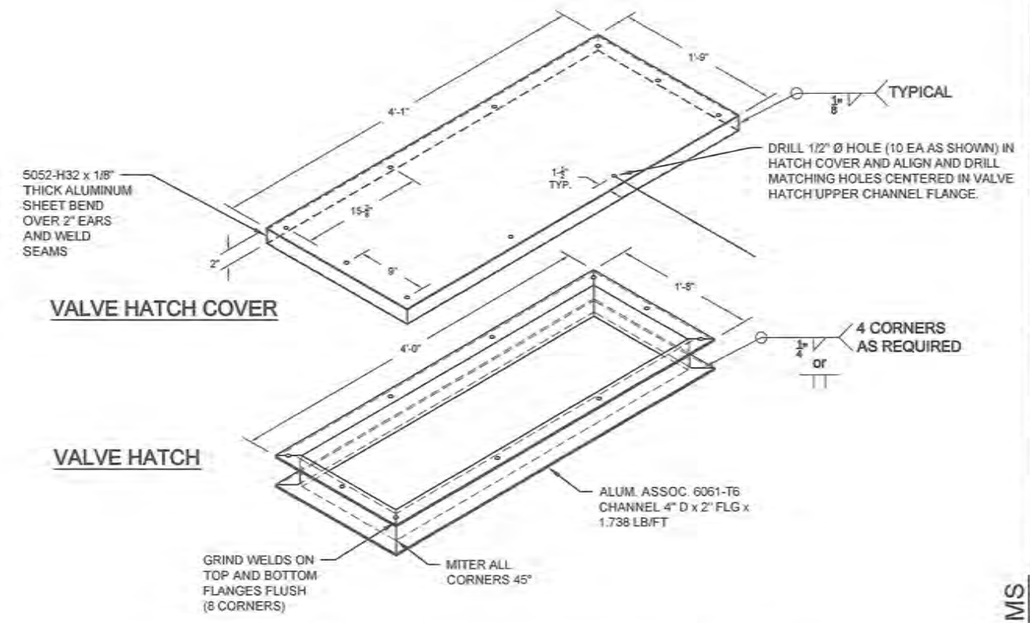

2/C4.4 VALVE ACCESS HATCH DETAIL
NOT TO SCALE

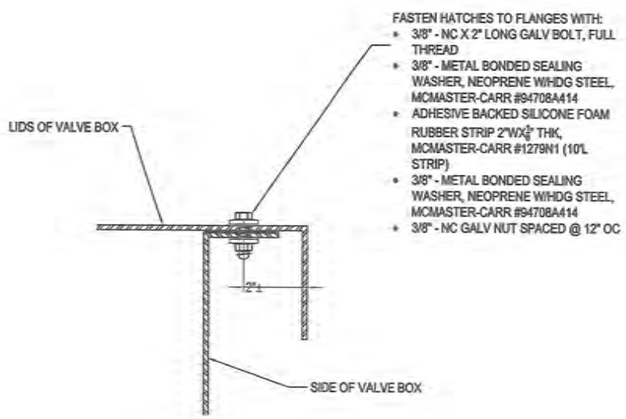

3/C4.4 LID FASTENING DETAIL
NOT TO SCALE

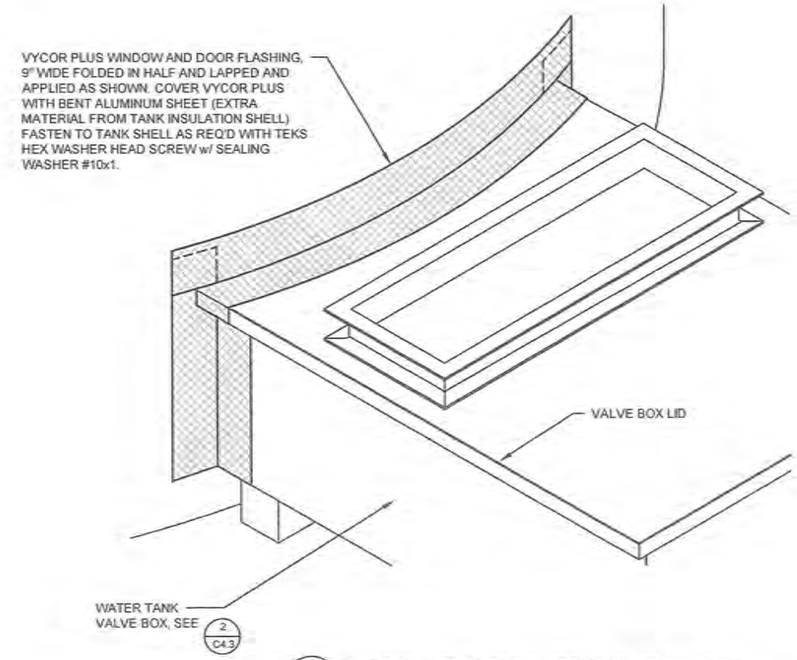

4/C4.4 VALVE BOX FLASHING DETAIL
NOT TO SCALE

SEE SHEET C4.1 AND C4.2 FOR TANK MANUFACTURE SUPPLIED ITEMS

RECORD DRAWING CERTIFICATE
THESE DRAWINGS REFLECT RECORDED INFORMATION OBTAINED DURING CONSTRUCTION. INFORMATION PROVIDED HEREIN IS ACCURATE TO THE BEST OF MY KNOWLEDGE.
NAME DATE

SCALE: AS SHOWN

CONSTRUCTION RECORD
FIELD BOOK
STAKING
FOREMAN
AS-BUILT
INSPECTOR

STATE OF ALASKA 49TH REGISTERED PROFESSIONAL ENGINEER PAUL C. WEBER CE-10276

WASHETERIA AND WATER TANK
WATER TANK VALVE BOX DETAILS
CHEFORNAK, ALASKA

CE2 ENGINEERS, INC.
PO BOX 223946 ANCHORAGE, AK 99522 PH: 907-349-1010 FAX: 907-349-1015

REVISION	BY	DATE

Project No. ____ Date AUG 2016 Designed PCW Drawn CM Approved PCW

Sheet No. C4.4
SHEET ____ OF ____

G:\ACAD\CHEFORNAK\2016 Washeteria and Water Tank\C4.4 WATER TANK piping Details.dwg, 8/30/2016 1:04:29 PM, cmerz, \\Ce2main\LANIER MP C2050\LD520C PCL 6

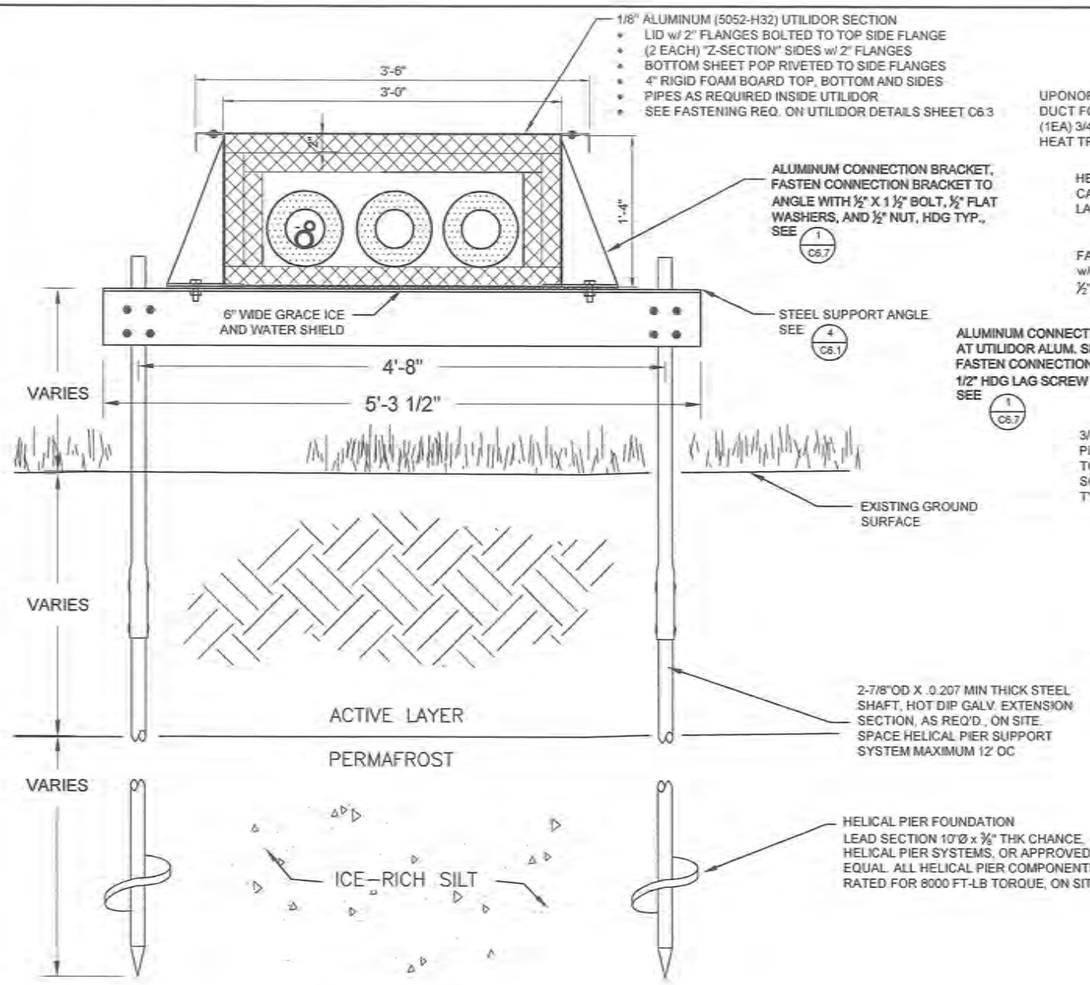

3 / C6.1 UTILIDOR WITH HELICAL PIER SUPPORT NTS

NOTES:

1. REMOVE ALL ORGANIC MATERIAL 6-10" BENEATH THE 4x12 SLEEPERS AND REPLACE WITH ADOT TYPE C-1 MATERIAL.
2. STACK UP TO 2 SLEEPERS AS FIELD REQUIRED, OTHERWISE USE HELICAL PIER SUPPORT, DETAIL 3 THIS SHEET.
3. UTILIDOR SLEEPER SUPPORTS WILL BE PLACED EVERY 6' O.C.
4. PROVIDE INSULATING GASKETS AND/OR COATINGS BETWEEN DISSIMILAR METALS, TYP.

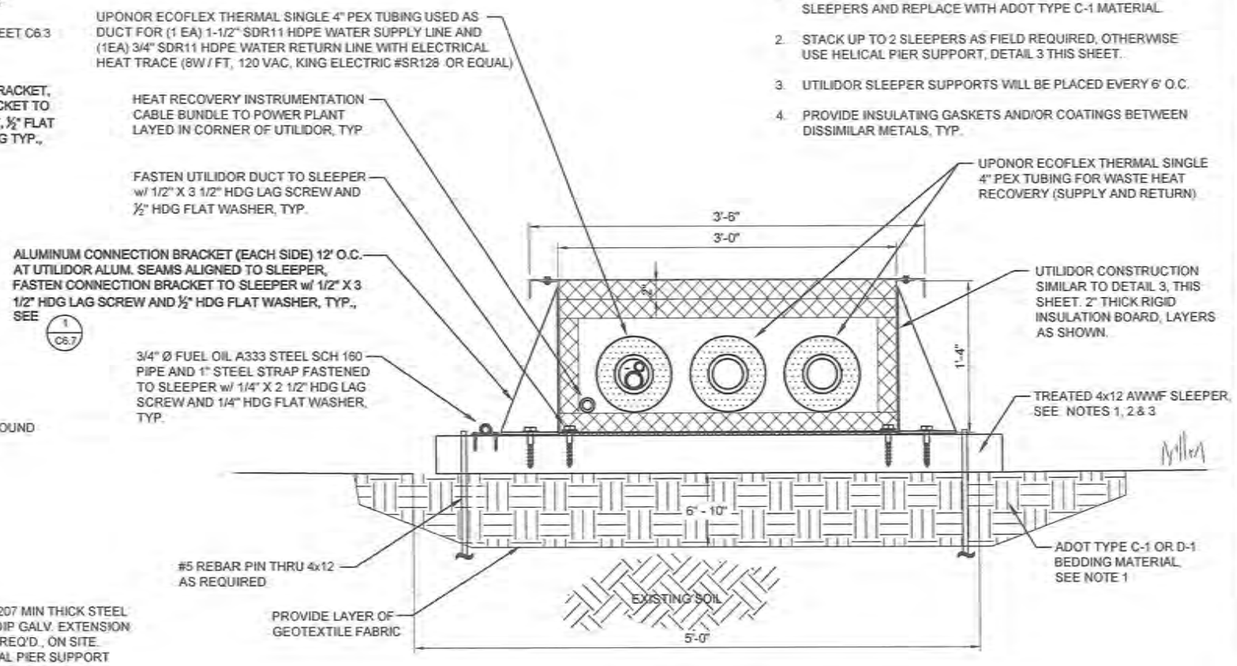

1 / C6.1 WATER AND WASTE HEAT DUCT SLEEPER SUPPORT DETAILS NTS

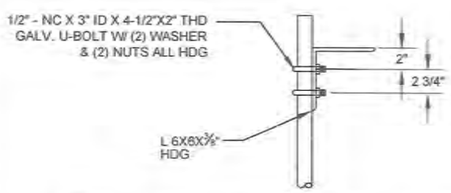

4 / C6.1 STEEL SUPPORT ANGLE DETAILS NTS

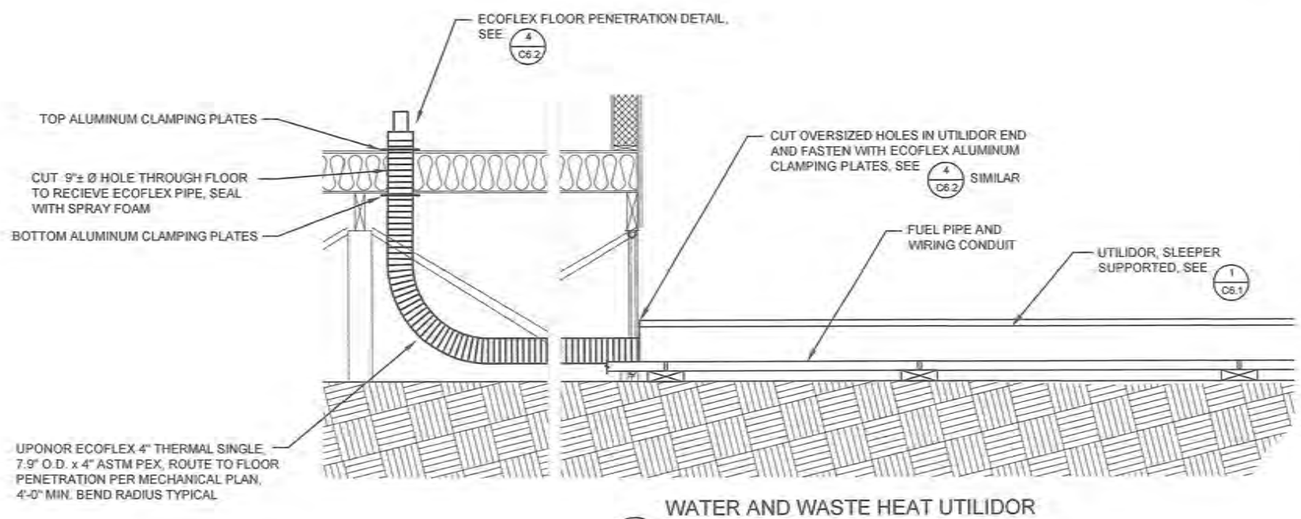

2 / C6.1 WATER AND WASTE HEAT UTILIDOR TO WASHETERIA / POWER PLANT NTS

RECORD DRAWING CERTIFICATE
THESE DRAWINGS REFLECT RECORDED INFORMATION OBTAINED DURING CONSTRUCTION. INFORMATION PROVIDED HEREIN IS ACCURATE TO THE BEST OF MY KNOWLEDGE.
NAME DATE

SCALE: AS SHOWN

CONSTRUCTION RECORD
FIELD BOOK
STAKING
FOREMAN
AS-BUILT
INSPECTOR

STATE OF ALASKA 4938 PAUL C. WIDNER CE-10276 REGISTERED PROFESSIONAL ENGINEER

WASHETERIA AND WATER TANK
UTILIDOR / PIPE SUPPORT DETAILS
CHEFORNAK, ALASKA

CE2 ENGINEERS, INC.
PO BOX 232946 ANCHORAGE, AK 99523 PH: 907-349-1018 FAX: 907-349-1015

REVISION	BY	DATE

Project No. ____ Date AUG 2016
Designed PCW
Drawn CM
Approved PCW

Sheet No. C6.1
SHEET ____ OF ____

G:\ACAD\CHEFORNAK\2016 Washeteria and Water Tank\C6.1 Utilidor Details.dwg, 8/30/2016 3:22:42 PM, cmerz, \\Ce2main\LANIER MP C2050/LD520C PCL 6

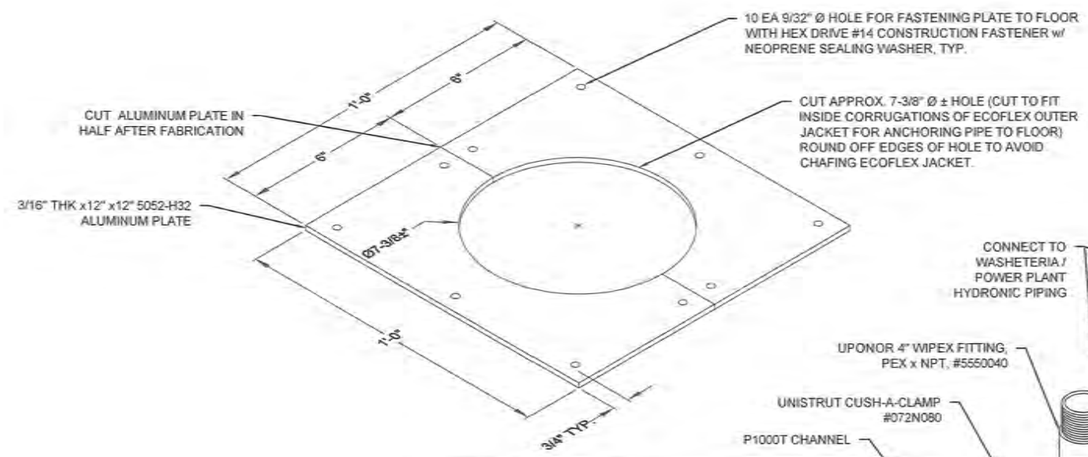

ECOFLEX ALUMINUM CLAMPING PLATES DETAIL

NOTE:

1. ALL PART NUMBERS ARE UNISTRUT, U.N.O.

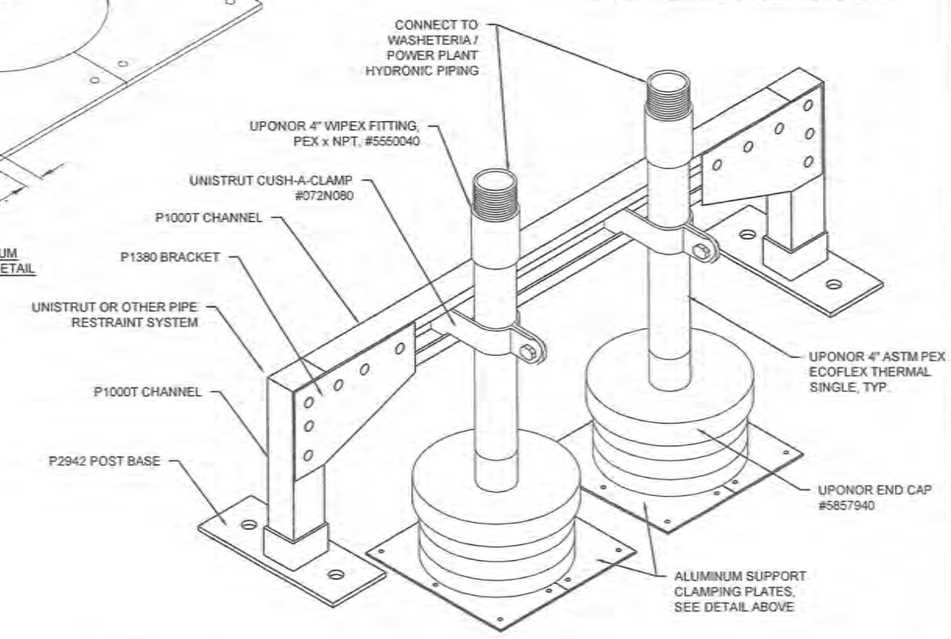

4 / C6.2 ECOFLEX FLOOR PENETRATION DETAIL

SCALE: NTS

RECORD DRAWING CERTIFICATE

THESE DRAWINGS REFLECT RECORDED INFORMATION OBTAINED DURING CONSTRUCTION. INFORMATION PROVIDED HEREIN IS ACCURATE TO THE BEST OF MY KNOWLEDGE.

NAME DATE

SCALE: AS SHOWN

BAR IS ONE INCH ON ORIGINAL DRAWING

0 1"

IF NOT ONE INCH ON THIS SHEET, ADJUST SCALE ACCORDINGLY

CONSTRUCTION RECORD

FIELD BOOK

STAKING

FOREMAN

AS-BUILT

INSPECTOR

STATE OF ALASKA 49TH PAUL C. WISNER CE-10276 REGISTERED PROFESSIONAL ENGINEER

8-30-16

WASHETERIA AND WATER TANK

PIPE DETAILS

CHEFORNAK, ALASKA

CE2 ENGINEERS, INC.

PO BOX 220948 ANCHORAGE, AK 99503 PH: 907-349-1010 FAX: 907-349-1015

REVISION	BY	DATE

Project No. ____ AUG 2016

Date ____ PCW

Designed ____ DGR

Drawn ____ PCW

Approved

Sheet No. C6.2

SHEET ____ OF ____

G:\ACAD\CHEFORNAK\2016 Washeteria and Water Tank\C6.2 PIPE DETAILS.dwg, 8/30/2016 2:16:24 PM, cmerz, \\Ce2main\LANIER MP C2050/LD520C PCL 6

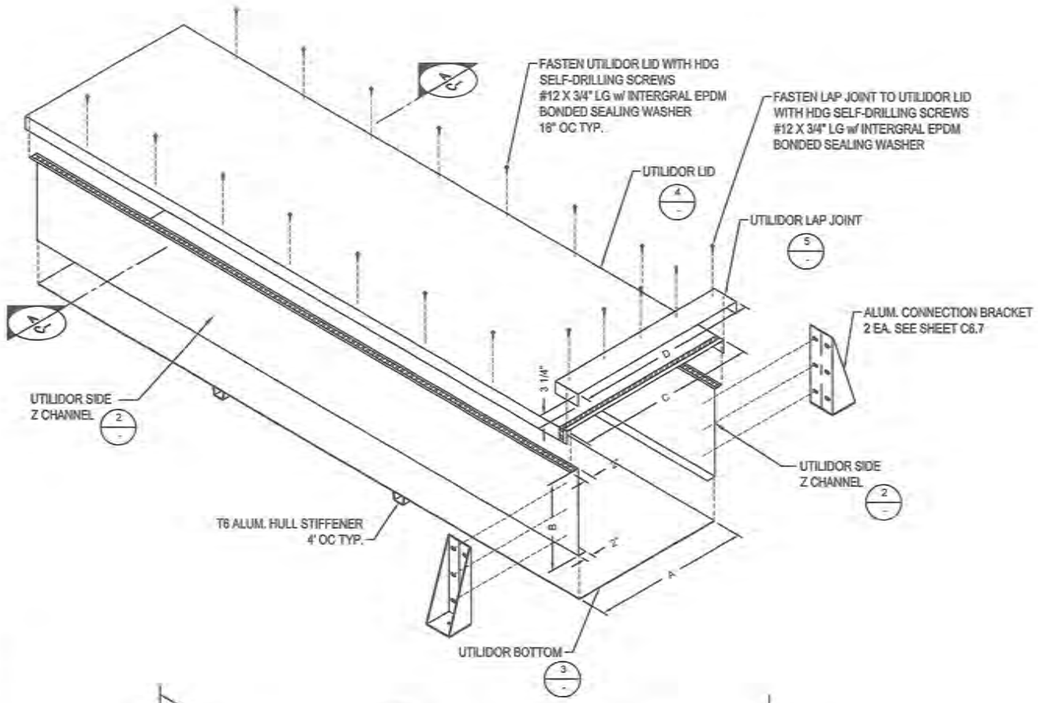

1 C6.3 UTILIDOR ISOMETRIC NTS

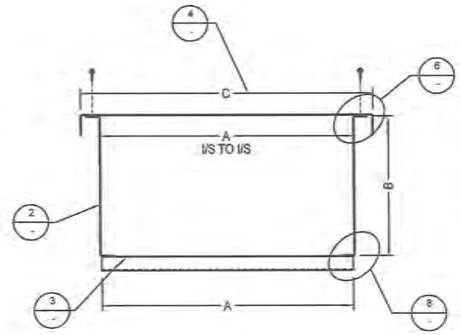

A C6.3 UTILIDOR SECTION NTS

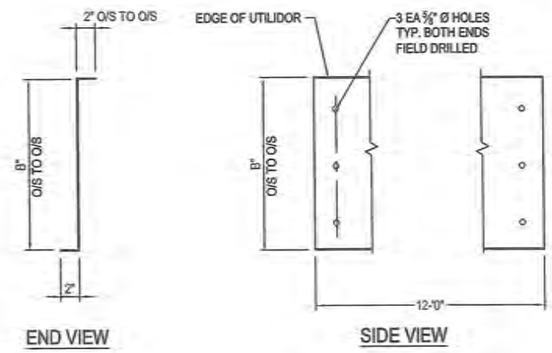

2 C6.3 SIDE Z-CHANNEL DETAILS NTS

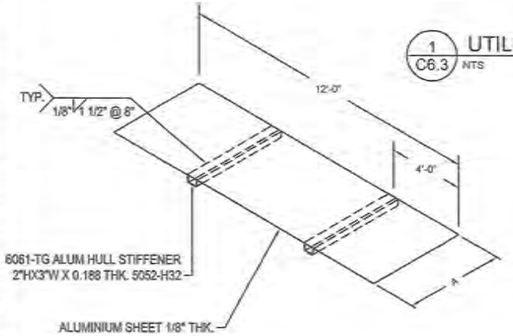

3 C6.3 BOTTOM SHEET DETAIL NTS

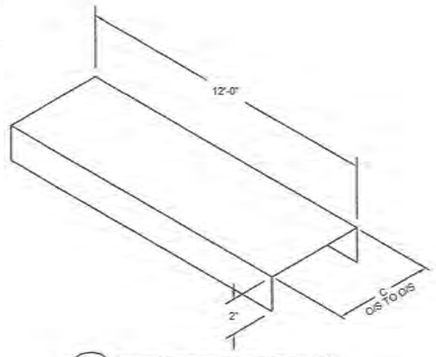

4 C6.3 UTILIDOR LID DETAIL NTS

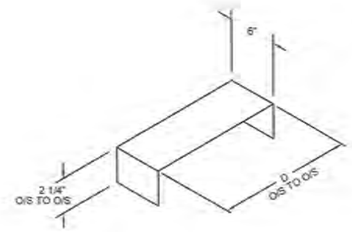

5 C6.3 UTILIDOR LAP JOINT NTS

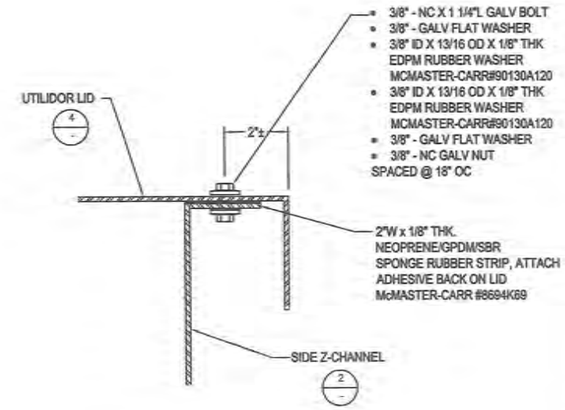

6 C6.3 TOP CORNER DETAILS NTS

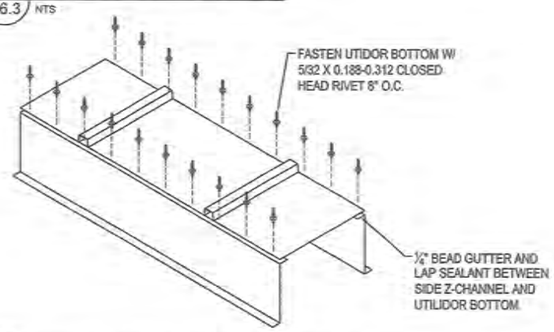

7 C6.3 BOTTOM FASTENING DETAILS NTS

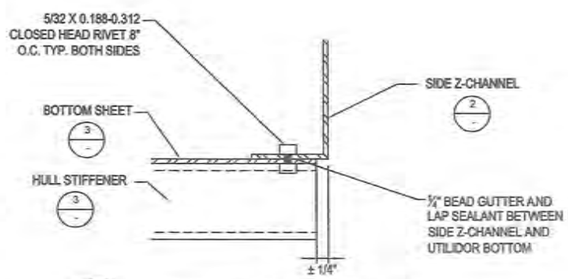

8 C6.3 BOTTOM CORNER DETAILS NTS

NOTE:

1. ALL ALUMINIUM SHALL BE 5052-H32 1/8" THICK, UNLESS OTHERWISE NOTED.
2. BOTTOM OF UTILIDOR WILL BE SEALED W/ BUTYL ACETATE GUTTER AND LAP SEALANT 1/4" BEAD.
3. FASTEN UTILIDOR BOTTOM W/ RIVETS BEFORE INSTALLING ALUMINIUM HULL STIFFENERS.

RECORD DRAWING CERTIFICATE
THESE DRAWINGS REFLECT RECORDED INFORMATION OBTAINED DURING CONSTRUCTION. INFORMATION PROVIDED HEREIN IS ACCURATE TO THE BEST OF MY KNOWLEDGE.
NAME: DATE:

SCALE: AS SHOWN

CONSTRUCTION RECORD
FIELD BOOK
STAKING
FOREMAN
AS-BUILT
INSPECTOR

STATE OF ALASKA 49TH PAUL C. WEBNER CE-10276 REGISTERED PROFESSIONAL ENGINEER

WASHETERIA AND WATER TANK
UTILIDOR DETAILS
CHEFORNAK, ALASKA

CE2 ENGINEERS, INC.
PO BOX 220948 ANCHORAGE, AK 99503 PH: 907-349-1010 FAX: 907-349-1015

REVISION	BY	DATE

Project No. ____ Date AUG 2016
Designed PCW
Drawn CM
Approved PCW

Sheet No. C6.3
SHEET ____ OF ____

G:\ACAD\CHEFORNAK\2016 Washeteria and Water Tank\C6.3 Utilidor Details 2.dwg, 8/30/2016 1:22:07 PM, cmerz, \\Ce2main\LANIER MP C2050/LD520C PCL 6

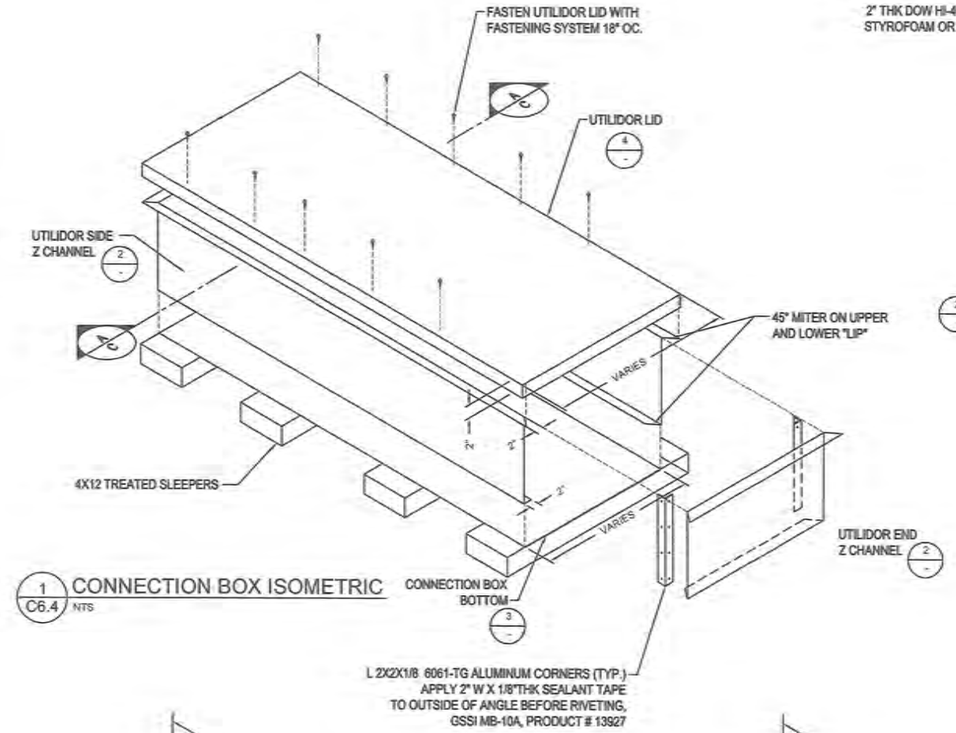

1 C6.4 CONNECTION BOX ISOMETRIC
NTS

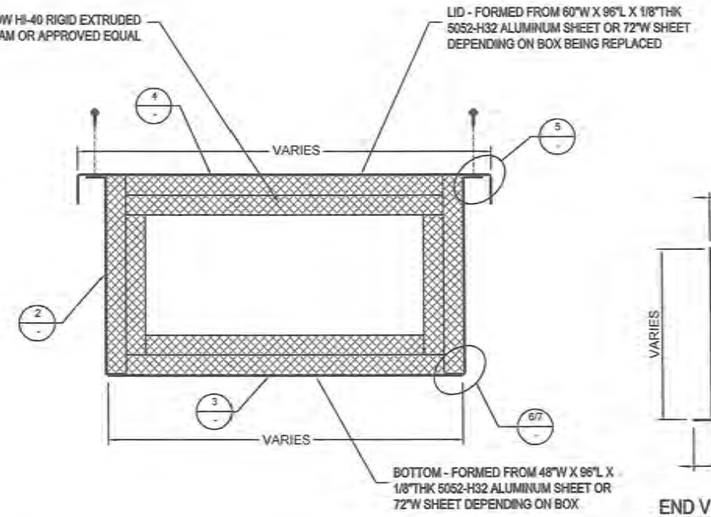

A C6.4 CONNECTION BOX SECTION
NTS

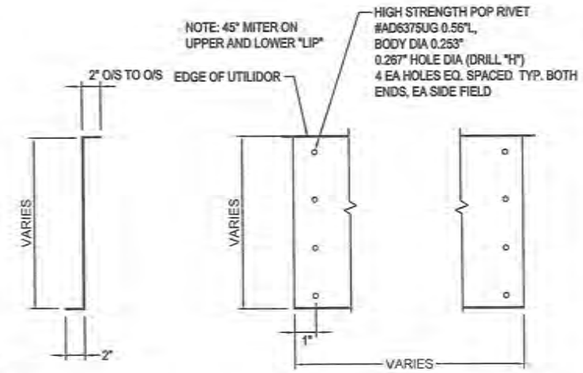

2 C6.4 SIDE & END Z-CHANNEL DETAILS
NTS

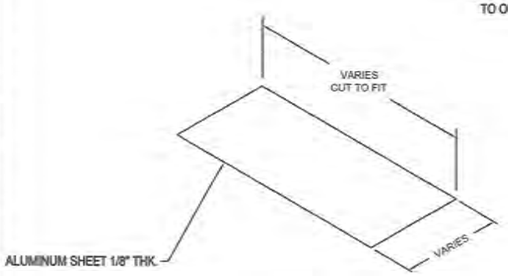

3 C6.4 BOTTOM SHEET DETAIL
NTS

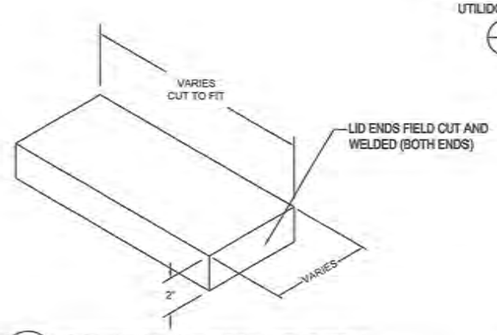

4 C CONNECTION BOX LID DETAIL
NTS

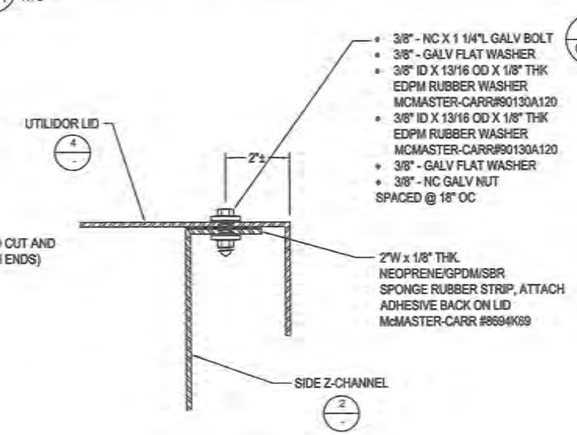

5 C6.4 TOP BOLTED DETAIL
NTS

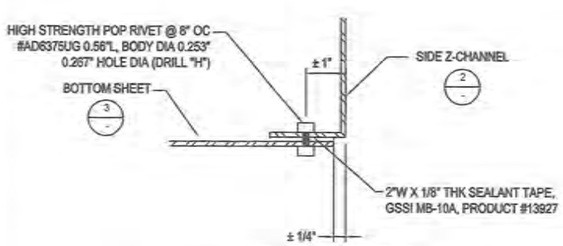

6 C6.4 BASE SEAM DETAIL (EXCEPT AT SLEEPERS)
NTS

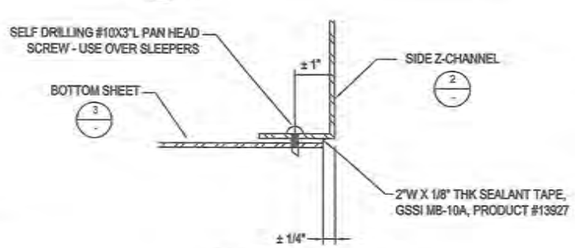

7 C6.4 BASE SEAM DETAIL (AT SLEEPERS)
NTS

NOTE:

1. ALL ALUMINUM SHALL BE 5052-H32 1/8" THICK, UNLESS OTHERWISE NOTED.
2. BOTTOM OF UTILIDOR WILL BE SEALED W/ 2"W X 1/8" THK SEALANT TAPE, GSSI MB-10A, PRODUCT #13927

RECORD DRAWING CERTIFICATE
THESE DRAWINGS REFLECT RECORDED INFORMATION OBTAINED DURING CONSTRUCTION. INFORMATION PROVIDED HEREIN IS ACCURATE TO THE BEST OF MY KNOWLEDGE.
NAME DATE

SCALE: AS SHOWN

CONSTRUCTION RECORD
FIELD BOOK
STAKING
FOREMAN
AS-BUILT
INSPECTOR

STATE OF ALASKA 14938 PAUL C. WEBNER CE-10276 REGISTERED PROFESSIONAL ENGINEER

2013 WATER DISTRIBUTION AND WATERING POINTS

MISC. ARCTIC BOX DETAILS

CHEFORNAK, ALASKA

CE2 ENGINEERS, INC.
PO BOX 230948 ANCHORAGE, AK 99523 PH: 907-345-1015 FAX: 907-345-1015

REVISION	BY	DATE

Project No. ____ Date APRIL 2013
Designed PCW
Drawn LAW
Approved PCW

Sheet No: C6.4
SHEET ____ OF ____

G:\ACAD\CHEFORNAK\2016 Washeteria and Water Tank\C6.4 CONNECTION BOX DETAILS.dwg, 8/30/2016 1:23:06 PM, cmerz, \\Ce2main\LANIER MP C2050\LD520C PCL 6

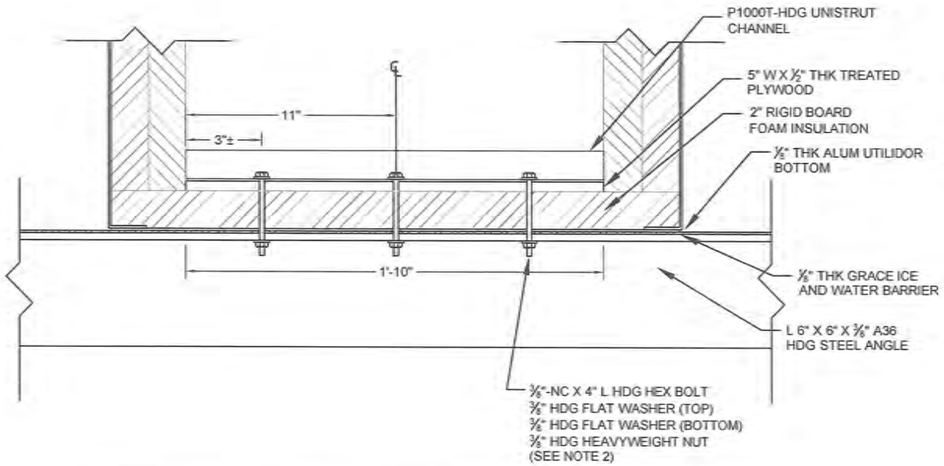

1 / C6.5 PIPE ANCHOR ASSEMBLY FASTENER LAYOUT
NTS

NOTES:

1. PLACE PIPE ANCHOR ASSEMBLY EVERY OTHER UTILIDOR SECTION (12' ± O.C.), AND BEFORE AND AFTER EACH UTILIDOR JUMP.
2. WHEN CONNECTING TO 4X12 SLEEPER REPLACE WITH ⅜" X 6" HDG LAG SCREW AND ⅜" HDG FLAT WASHER.
3. INSULATION AND PIPE CLAMPS NOT SHOWN ON FASTENER LAYOUT FOR CLARITY

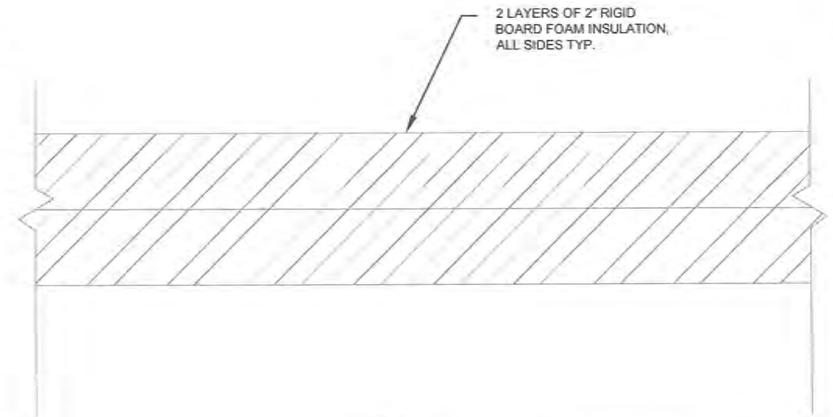

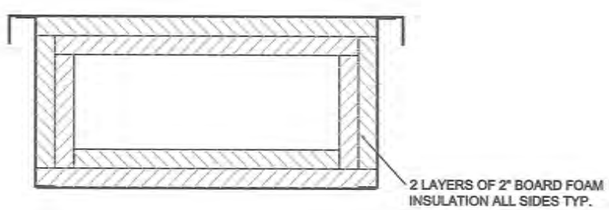

2 / C6.5 TYPICAL INSULATION LAYOUT
NTS

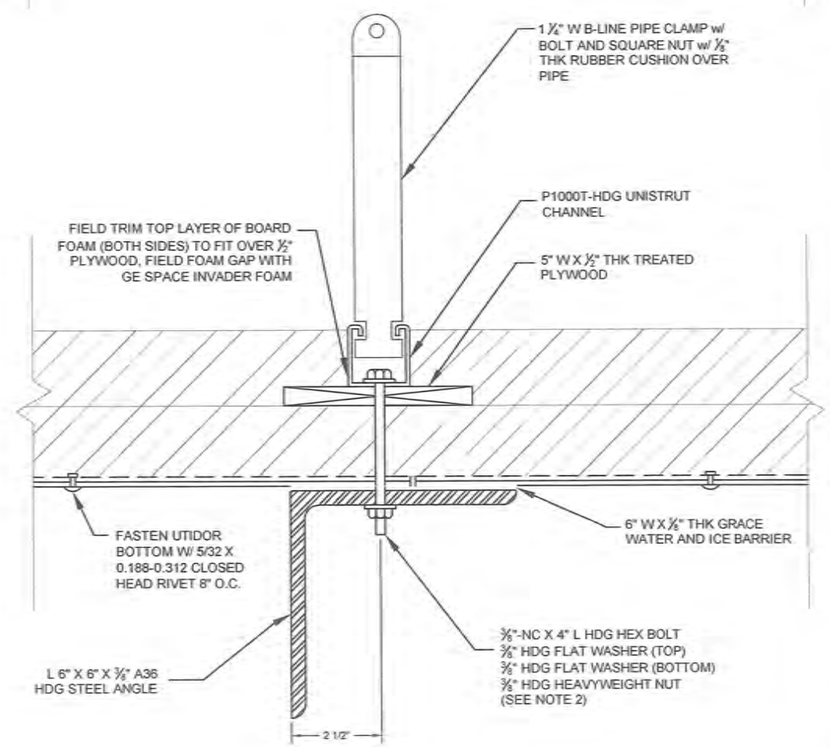

3 / C6.5 PIPE ANCHOR ASSEMBLY TYPICAL SECTION
NTS

RECORD DRAWING CERTIFICATE
THESE DRAWINGS REFLECT RECORDED INFORMATION OBTAINED DURING CONSTRUCTION. INFORMATION PROVIDED HEREIN IS ACCURATE TO THE BEST OF MY KNOWLEDGE.
NAME DATE

SCALE: AS SHOWN

CONSTRUCTION RECORD
FIELD BOOK
STAKING
FORMAN
AS-BUILT
INSPECTOR

STATE OF ALASKA PAUL C. WEBNER CE-10278 REGISTERED PROFESSIONAL ENGINEER

WASHETERIA AND WATER TANK
UTILIDOR PIPE ANCHORING DETAILS
CHEFORNAK, ALASKA

CE2 ENGINEERS, INC.
PO BOX 232946 ANCHORAGE, AK 99523 PH: 907-349-1015 FAX: 907-349-1016

REVISION	BY	DATE

Project No. ___ Date AUG 2016
Designed PCW
Drawn CM
Approved PCW

Sheet No. C6.5
SHEET ___ OF ___

G:\ACAD\CHEFORNAK\2016 Washeteria and Water Tank\C6.5 Utilidor Pipe Anchor Details.dwg, 8/30/2016 1:23:54 PM, cmerz, \\Ce2main\LANIER MP C2050/LD520C PCL 6

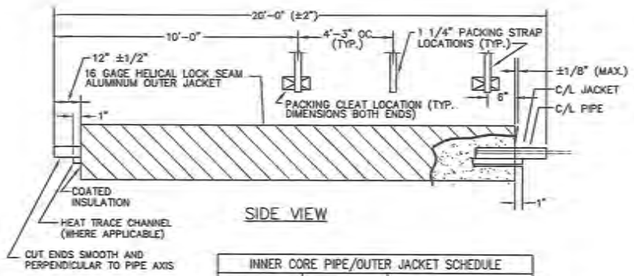

INNER CORE PIPE/OUTER JACKET SCHEDULE		
NOMINAL CORE PIPE DIA.	INNER CORE PIPE O.D.	NOMINAL OUTER JACKET DIA.
4 INCH	4.50"	12 INCH
4 INCH	4.50"	15 INCH
8 INCH	8.625"	18 INCH

1 / C6.6 HDPE ARCTIC PIPE TYPICAL
N.T.S.

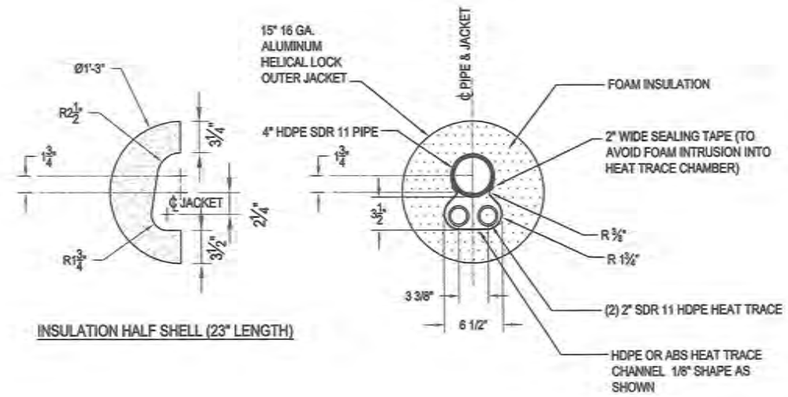

2 / C6.6 4" X 15" HDPE ARCTIC PIPE CROSS SECTION - GLYCOL TRACED
N.T.S.

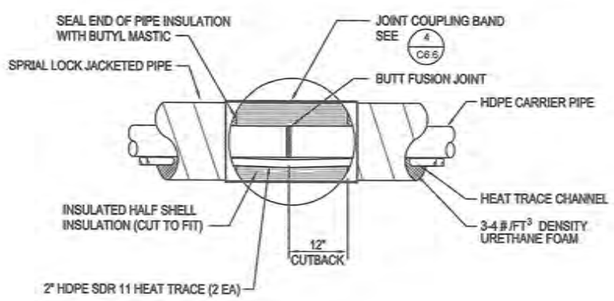

3 / C6.6 TYPICAL BUTT FUSION JOINT
N.T.S.

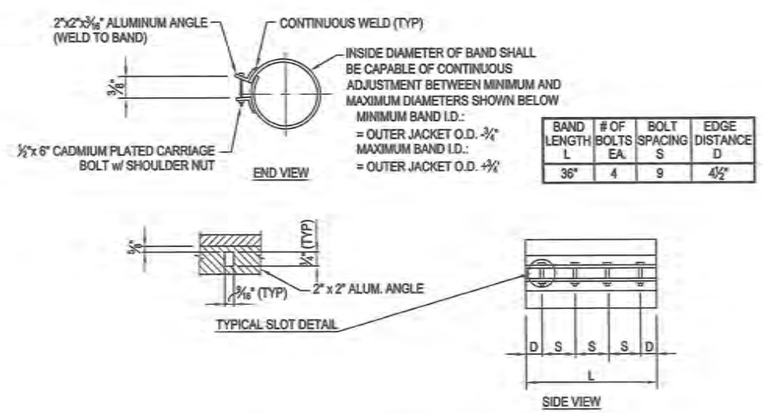

BAND LENGTH L	# OF BOLTS EA.	BOLT SPACING S	EDGE DISTANCE D
36"	4	9	4 1/2"

4 / C6.6 ARCTIC PIPE COUPLING BAND
N.T.S.

RECORD DRAWING CERTIFICATE
THESE DRAWINGS REFLECT RECORDED INFORMATION OBTAINED DURING CONSTRUCTION. INFORMATION PROVIDED HEREIN IS ACCURATE TO THE BEST OF MY KNOWLEDGE.
NAME DATE

SCALE: AS SHOWN

CONSTRUCTION RECORD
FIELD BOOK
STAKING
FOREMAN
AS-BUILT
INSPECTOR

STATE OF ALASKA 49TH PAUL C. WEBNER CE-10276 REGISTERED PROFESSIONAL ENGINEER

WASHETERIA AND WATER TANK
ARCTIC PIPE DETAILS
CHEFORNAK, ALASKA

CE2 ENGINEERS, INC.
PO BOX 223246 ANCHORAGE, AK 99503 PH: 907-349-9319 FAX: 907-349-9315

REVISION	BY	DATE

Project No. ____ Date AUG 2016 Designed PCW Drawn CM Approved PCW

Sheet No. C6.6
SHEET ____ OF ____

G:\ACAD\CHEFORNAK\2016 Washeteria and Water Tank\C6.6 ARCTIC PIPE DETAILS.dwg, 8/30/2016 1:24:23 PM, cmerz, \\Ce2main\LANIER MP C2050/LD520C PCL 6

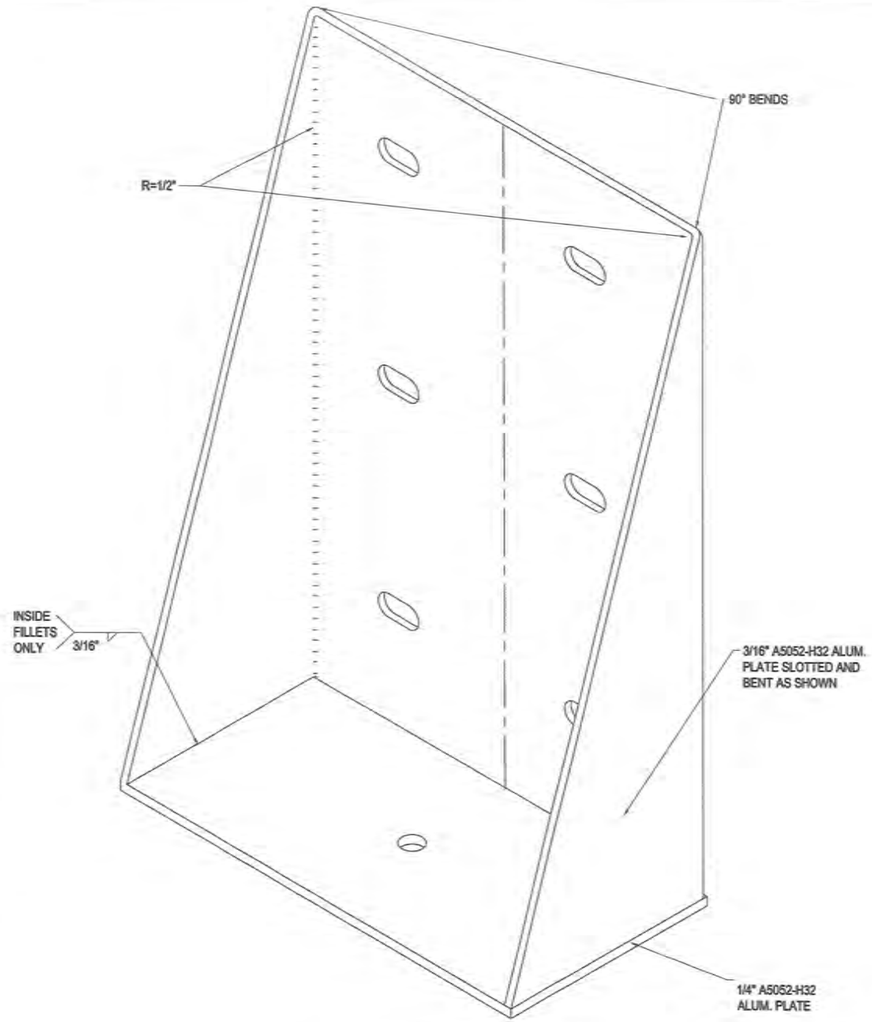

ISOMETRIC VIEW

1 C6.7 UTILIDOR CONNECTION BRACKET ISOMETRIC
NTS

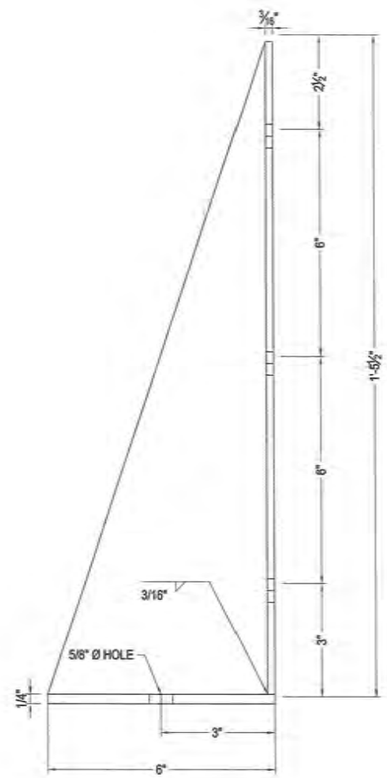

SIDE VIEW

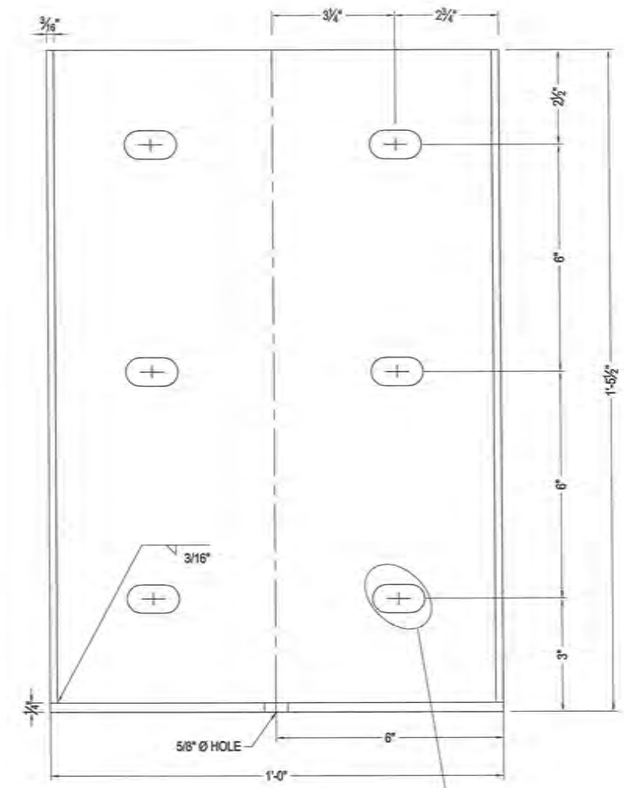

FRONT VIEW

2 C6.7 UTILIDOR CONNECTION BRACKET DETAILS
NTS

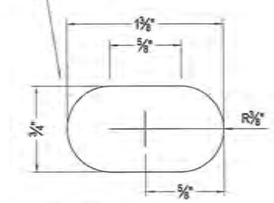

EXPANSION SLOT DETAIL

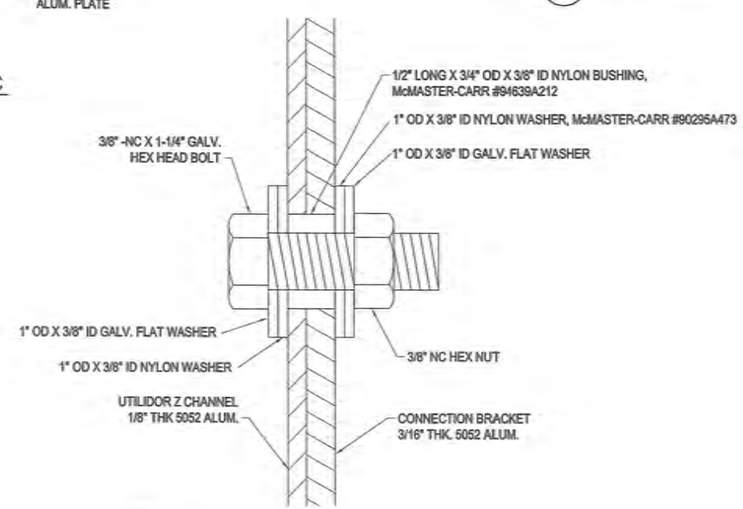

3 C6.7 EXPANSION FASTENING DETAILS
NTS

RECORD DRAWING CERTIFICATE
THESE DRAWINGS REFLECT RECORDED INFORMATION OBTAINED DURING CONSTRUCTION. INFORMATION PROVIDED HEREIN IS ACCURATE TO THE BEST OF MY KNOWLEDGE.
NAME DATE

SCALE: AS SHOWN

CONSTRUCTION RECORD
FIELD BOOK
STAKING
FOREMAN
AS-BUILT
INSPECTOR

STATE OF ALASKA 49TH PAUL C. WEISNER CE-10276 REGISTERED PROFESSIONAL ENGINEER 8-30-2016

WASHETERIA AND WATER TANK
UTILIDOR CONNECTION BRACKET DETAILS
CHEFORNAK, ALASKA

CE2 ENGINEERS, INC.
PO BOX 22946 ANCHORAGE, AK 99523 PH: 907-349-1010 FAX: 907-349-1015

REVISION	BY	DATE

Project No.
Date AUG 2016
Designed DWB
Drawn MM
Approved PCW

Sheet No. C6.7
SHEET ___ OF ___

G:\ACAD\CHEFORNAK\2016 Washeteria and Water Tank\C6.7 Utilidor Bracket Details.dwg, 8/30/2016 1:24:50 PM, cmerz, \\Ce2main\LANIER MP C2050/LD520C PCL 6

SECTION 028220 - CHAIN LINK FENCE AND GATES

DESCRIPTION - Furnish and install chain link fence and gates as described below and as shown on the plans.

GENERAL - Furnish new materials in accordance with manufacturer's data and specification for material to be installed and shop drawings, plan elevations and details.

WIRE FABRIC - Provide wire fabric with:
1) 9 gauge (0.148 in. diameter) steel wire with a minimum breaking strength of 1,290 lb. meeting ASTM A 392 Class I or ASTM A 491;
2) Mesh size of 2 in. ±1/8 in. between parallel wires with at least 7 meshes in a vertical dimension of 23 in. along the diagonals of the openings and
3) Knuckled selvages at the top and bottom edge of the fabric, unless otherwise shown on the plans.

POSTS - 3" O.D. galvanized steel. Do not provide rerolled or open-seam posts. Use material meeting ASTM F 1083 for all posts. Furnish, high strength pipe posts manufactured by cold rolling using steel strip conforming to ASTM A 1011, CS (Commercial Steel) if required for specific installation design criteria.

POST CAPS - Provide malleable iron post caps designed to exclude all moisture. If top rail is shown on the plans, furnish post caps with an opening for the top rail. Post caps must have a 2-in. skirt.

GATES - Provide gates fabricated from round sections of pipe as shown on the plans. Use material meeting ASTM F 1083 for all gate pipes. For each gate, include:
1) Corner and tee fittings of malleable iron or pressed steel with means for attaching diagonal bracing members;
2) Hinges of malleable iron allowing a full 180° swing, easily operated by one person;
3) Ball-and-socket-type bottom hinges that do not twist or turn from the action of the gate and prevent the closed gate from being lifted off the hinges;
4) Diagonal braces consisting of 3/8-in.-diameter cable with turnbuckles, two to each gate frame;
5) Latches of malleable iron or steel for single gates with a single-fork latch and padlock eye that will keep the gate closed;

TOP/BOTTOM RAIL - Provide rail manufactured from 1.660 in. OD galvanized steel. Use material meeting ASTM F 1083 for all rail pipes. Provide pipe in sections at least 20 ft. long joined with outside steel sleeve couplings at least 6 in. long with a minimum wall thickness of 0.70 in. Use couplings designed to allow for expansion. Maximum rail spacing 6'-0" OC. Do not provide top rail. Provide bottom rail.

CONSTRUCTION - Erect the chain link fence to the lines established on the plans.
1) Erection of Posts. Install posts as shown on the plans. Plumb and permanently position posts with anchorages firmly set before fabric is placed. Brace corner and pull posts.
2) Erection of Fabric. After all posts have been permanently positioned and anchorages firmly set, place the fabric with the cables drawn taut with the turnbuckles. Secure one end and apply enough tension to the other end to remove all slack before making attachments. Unless otherwise shown on the plans, cut the fabric and independently attach each span at all corner posts and pull posts. Fasten fabric at 12 in. intervals to the top and bottom rails between posts. On gate frames, fasten the fabric to the top and bottom of the gate frame at 12 in. intervals. Use steel wire fabric ties of 9 gauge steel or larger. Fasten fabric to terminal posts by steel stretcher bars and stretcher bar bands fitted with carriage bolts and nuts of the size and spacing showed on the plans. Use stretcher bars to fasten endposts, pull posts, corner posts, and gateposts with stretcher bar bands at intervals of at most 15 in. Attach stretcher bars to terminal posts with 1 in. × 1/8 in. flat steel bands with 3/8-in. carriage bolts at intervals up to 15 in.

SECTION 072000 - INSULATION

Applications of insulation specified herein include rigid wall, blanket types and sound batts of building thermal insulation.

QUALITY ASSURANCE - Thermal Conductivity: Thicknesses shown are for thermal conductivity (K-value at 75 degrees F or 24 degrees C) specified for each material. Provide adjusted thicknesses as directed for equivalent use of material having a different thermal conductivity.

INSULATION TYPES -
1) Rigid: Expanded polystyrene insulation board with integral high-density skin; complying with ASTM C578, minimum 25 pounds/square inch compressive strength. K-value of 0.23; 0.3 percent maximum water absorption in conformance with ASTM C272.
2) Batt/Sound: Unfaced inorganic fibers formed into flexible resilient friction fit blankets; ASTM C665, Type I, in 1 pound density complying with ASTM C518. Minimum R-value as specified in Drawings.

MISCELLANEOUS MATERIALS - Adhesive for Bonding Insulation: Type recommended by insulation manufacturer and complying with fire-resistance requirements. Mechanical Anchors: Stick clips as recommended by insulation manufacturer for type of application and condition of substrate. Extend insulation full thickness as shown over entire area to be insulated. Remove projections which interfere with placement. Apply single or double layer of insulation of required thickness, as shown or required to make up total thickness.

INSTALLATION -
1) Rigid: Set units in adhesive applied in conformance with manufacturer's instructions. Use type adhesive recommended by manufacturer of insulation.
2) Batt/Sound: Fit insulation full and tightly in cavity and between framing and facings and fasten adequately at top to prevent sagging. Provide a snug fit at all sides and tap insulation at end joints. Carefully fit around pipes, conduits, and the like, making sure all such items are on the warm side of the insulation. Stuff loose insulation into miscellaneous voids and cavity spaces which are inaccessible for full blanket installation and as indicated. Compact to approximately 40 percent of normal maximum volume (to a density of approximately 2.5 lbs. for each cubic foot).

SECTION 072500 - WEATHER BARRIERS

GENERAL - A weather barrier is a weather-resistant membrane for vertical building envelope protection that will maintain air/moisture resistance while maintaining moisture-vapor permeability.

QUALITY ASSURANCE - Installer shall have a minimum of five (5) years experience with installation of weather barrier assemblies under similar conditions. Installation shall be in accordance with weather barrier manufacturer's installation guidelines and recommendations. Source limitations: Provide weather barrier and accessory materials produced by single manufacturer.

MANUFACTURER - DuPont, 4417 Lancaster Pike, Chestnut Run Plaza 728, Wilmington, DE 19805; 1-800-448-9835; www.construction.tyvek.com.

MATERIALS - Basis of Design: spun-bonded polyolefin, non-woven, non-perforated, weather barrier is based upon DuPontTM Tyvek ® Commercial Wrap® and related assembly components. Performance Characteristics:
1) Air Penetration: 0.001 cfm/ft2 at 75 Pa, when tested in accordance with ASTM E2178. Type I per ASTM E1677.
2) Water Vapor Transmission: 28 perms, when tested in accordance with ASTM E96, Method B.
3) Water Penetration Resistance: Minimum 280 cm when tested in accordance with AATCC Test Method 127.
4) Basis Weight: Minimum 2.7 oz/yd2, when tested in accordance with TAPPI Test Method T-410.
5) Air Resistance: Air infiltration at >1500 seconds, when tested in accordance with TAPPI Test Method T-460.
6) Tensile Strength: Minimum 38/35 lbs/in., when tested in accordance with ASTM D882, Method A.
7) Tear Resistance: 12/10 lbs., when tested in accordance with ASTM D1117.
8) Surface Burning Characteristics: Class A, when tested in accordance with ASTM E84. Flame Spread: 10, Smoke Developed: 10.

9) INSTALLATION - Install weather barrier over exterior face of exterior wall substrate in accordance with manufacturer's recommendations.

SECTION 072600 - VAPOR RETARDER

GENERAL - Extent of surfaces to receive vapor retarder as shown on Drawings. Provide manufacturer's specifications.

MATERIALS - Extremely low permeance vapor barriers for critically sensitive, low permeance floor coverings. Vapor Barrier must have the following qualities: Minimum WVTR as tested by ASTM E96 of 0.008. Vapor Barriers - 8 mil thick polyethylene.

ACCESSORIES - Adhesive: A spray-on adhesive, "3M High Tack Adhesive no. 76 or equivalent product with respect to shear strength, maximum recommended temperature and adhesion to polyethylene. Tape: A press-on tape, "3M No. 396 Super Bond Film Tape" or equivalent with respect to tensile strength, adhesion to steel, adhesion to polyethylene and range of use temperature. Use opaque color tape 2 inches wide.

INSTALLATION - Install Vapor Barrier/Retarder: Installation shall be in accordance with manufacturer's instruction. Overlap joints 6 inches and seal with manufacturer's tape. Seal all penetrations (including pipes) per manufacturer's instructions. No penetration of the Vapor Barrier/Retarder is allowed except for reinforcing steel and permanent utilities. Repair damaged areas by cutting patches of Vapor Barrier/Retarder, overlapping damaged area 6 inches and taping all four sides with tape. Coordinate installation of vapor retarder with installation of insulation. Protect insulation at all times against migration of moisture vapor. Install vapor retarder on the interior or warm side of all insulated utilidor panels as indicated on the drawings. After installation and prior to installing, the vapor retarder installation shall be thoroughly inspected prior to concealment; any break, rupture, tear or failure to provide a positive vapor retarder seal shall be repaired immediately.

SECTION 074113 - METAL ROOF PANELS

SYSTEM DESCRIPTION - Design requirements include Snow Load: 40 Pounds per square foot. (Roof Design Load.) Wind Speed: 125 miles per hour, 3 second gust. Wind exposure coefficient: D, I=1.0

QUALITY ASSURANCE - Provide a design analysis signed by a registered Professional Engineer, confirming that the structural capacity of the metal roofing system is adequate to resist the above design loads in accordance with the 2009 IBC Analysis and should include calculations verifying the design loads, the uplift pressures and how those loads affect the various areas of the roof. Provide a roof plan with the perimeter. Areas of discontinuity shall be clearly shown and distinguished from the typical field roof elements. UL 90 and ASTM E 1592 tested, ASTM E 1680-95 and E 1646-95 air and water tested.

Installer's Qualifications - Installation of panels and accessories by installers with a minimum of 5 years experience in panel projects of this nature. Installer shall be certified by the manufacturer.

SUBMITTALS - Product Data: Submit manufacturer's product specifications, standard details, certified product test results, installation instructions and general recommendations, as applicable to materials and finishes for each component and for total system of preformed panels. Samples: Submit 2 samples 12" square, of each exposed finish material. Shop Drawings: Submit small-scale layouts of panels on walls and roofs, and large-scale details of edge conditions, joints, corners, custom profiles, supports, anchorages, trim, flashings, closures, and special details. Distinguish between factory and field assembly work.

WARRANTY - Manufacturer's Product Warranty: Warrant for 20 years, following project delivery date, that panels will be free from defects, and that panels if properly installed will not rupture, fail structurally or perforate. Provide sample warranty. Installer's Warranty: Warrant panels, flashing, sealants, fasteners, and accessories against defective workmanship, and to remain watertight and waterproof with normal usage for two (2) years.

ACCEPTABLE MANUFACTURERS - Acceptable Manufacturers are limited to the following: METAL SALES Manufacturing Corporation; AEP Span; Ultra Seam; Alternate Brand Request or Substitution Request required.

PRODUCT DESIGNATION - 2 ½" standing seam roofing system. Net coverage (17.80" nominal)
Panels:
1) Base metal: Steel conforming to ASTM A 792, minimum strength yield 40,000 psi, minimum thickness 24 gauge.
2) Protective coating: Zinc-coated steel sheet, conforming to ASTM A 653/A 653M, G90 coating.
3) Exterior finish: Kynar 500 PVF2 with 70% resigns baked on epoxy base primer (.2 mil) and a baked on PVF2 finish coat (.8 mil). Totaling a nominal 1.0-mil dry film thickness. Color selected from standard colors.
4) Interior finish: .15-mil epoxy primer and .35-mil off while backer.
5) Weathering: no checking, blistering of adhesion loss when tested for 5000 hours in accordance to ASTM G-23-69.
6) Chalking: will not chalk greater than #8 rating when tested for 2000 hours in accordance with ASTM D-659.
7) Fading: Color change will not exceed 5 NBS units when tested for 5000 hours in accordance with ASTM D-2244.
8) Humidity: shall be less than 5% of #8 blister when tested for 500 hours in 100% humidity at 100 degrees F. in accordance with ASTM D-2247.
9) Salt spray: no more than 3/16 creep or tape off from scribe and less than 5% #6 blisters when tested for 1000 hours in 5% salt for 95 degrees F. in accordance with ASTM D-3363.
10)Flexibility: no rupture of coating when subjected to 180 degree bends over 1/8" diameter mandrel in accordance with ASTM D-1737.
11)Abrasion resistance: coating system shall withstand a minimum of 65 liters of falling sand before appearance of base metal per ASTM D-968.
Profile: ____________
Fabrication: Unless otherwise shown on drawings or specified herein, fabricate panels in continuous one-piece lengths and fabricate flashings and accessories in longest practical lengths.
Testing and Certification:
1) Wind Uplift: UL 580 test, Class 90 rated.
2) Construction #216B for .032" and .042" and .040" aluminum and 24 and 22 gauge steel x 12" and 15-5/8" wide panels installed with #2080 clips over nominal 3/4" thick plywood spaced 24" o.c. maximum.
3) Air Infiltration: Pane (with sidelap sealant and without insulation) to meet the following standard when tested in accordance with ASTM E1680-95: 0.0 cfm/sf at +/- 1.57 static pressure differential, and no more than 0.01 cfm/sf at +/- 6.24 psf static pressure differential.
4) Water Penetration: Panel with sidelap sealant to meet the following standard when tested in accordance. Interior finish consists of 0.15 mil. Acrylic primer and 0.35 mil. off white polyester backer.
5) EnduraClad exterior finish, consisting of baked-on acrylic primer (0.3 mil.) and a baked-on polyvinyl chloride finish coat (0.8 mil.) totaling a nominal1.1 mil. dry film thickness. Interior finish consists 0.15 mil. Acrylic primer and 0.35 mil. off white polyester backer.
6) PVF2 exterior metallic finish, consisting of a baked-on acrylic primer (0.2 mil.) and a baked-on polyvinylidene fluoride finish coat (0.8 mil) totaling a nominal 1.0 mil. dry film thickness. Interior finish consists 0.15 mil. Acrylic primer and 0.35 mil. off white polyester backer.

MISCELLANEOUS MATERIALS - Fasteners: Manufacturer's standard noncorrosive types, with exterior heads and gasketted. Accessories: Except as indicated as work of another specification section, provide components required for a complete roofing/siding system, including trim, copings, fascias, mullions, sills, corner units, ridge closures, clips, seam covers, battens, flashings, gutter, louvers, sealants, gaskets, filers, closure strips and similar items. Match materials/finishes of performed panels. Provide roofing underlayment (ice/water shield) under metal roofing.

ACCESSORIES (RIDGE VENT) - Vent to be manufactured by same manufacturer as metal roof panels and of same material as roof panel. Install where shown on drawing. Free Area: Minimum 50% open.

PANEL FABRICATION - Fabricate and finish panels and accessories at the factory to greatest extent possible, by manufacturer's standard procedures and processes, and as required to fulfill indicated performance requirements which have been demonstrated by factory testing. Comply with indicated profiles and dimensional requirements, and with structural requirements. Required Performances: Components of exterior roofing panel system for the following installed-as-indicated performances; Water Penetration: No significant, uncontrolled leakage at 4 lbs. per sq. ft. pressure with spray test. Air Infiltration: 0.02 cfm per sq. ft. for gross roof/wall areas, with 4 lbs. per sq. ft. differential pressure. Exterior Roofing: Standard profiles for exposed fastener roofing, similar to those indicated on drawings. Apply bituminous coating or other permanent separation materials on concealed panel surfaces where panels would otherwise be in direct contact with substrate materials which are non-compatible or could result in corrosion or deterioration of either material or finishes. Condensation: Fabricate panels for control of condensation, including proper inclusion of seals and provisions for breathing, venting, weeping and draining.

INSTALLATION (PANELS AND FLASHING) - Install per approved submittal drawings and manufacturer's directions only. Overlap flashing at least 6 inches. Discrepancies between job site conditions and drawings as approved shall be brought to the attention of the Architect or Architect's representative for resolution.

CUTTING AND FITTING - Neat, square, and true. Torch cutting is prohibited where cut is exposed to final view. Openings 6 inches and larger in any direction: Shop fabricate and reinforce to maintain original load capacity. Openings less than 6 inches in largest dimension: Made by trade requiring opening.

PANEL DAMAGE AND FINISH SCRATCHES - Panels or flashings that have severe paint and/or substrate damage shall be replaced as directed by the Architect's or Owner's Representative.

SECTION 074300 - COMPOSITE PANEL - STRUCTURAL INSULATED PANEL (SIP)

SECTION INCLUDES - Structural Insulated Panels are pressure laminated composites of approved Oriented Strand Board (OSB) and Certified Expanded Polystyrene (EPS) insulation, manufacturer supplied connecting splines and approved fasteners as detailed in manufacturer's literature.

SUBMITTALS - Each panel type shall be accompanied with verified structural calculations by a professional engineer qualified to perform such work. Manufacturer shall certify that panels have been tested in accordance with ASTM E72, ASTM E 119, ASTM E 84, and other applicable tests. Provide shop drawings, specifications, and installation instructions (details).

QUALITY ASSURANCE - Each panel shall be labeled indicating the maintenance of in-plant Quality Control/Third Party Inspection Service verifying material and process are in compliance to code report and specifications, and in compliance with national codes. Install all caulks, adhesives and sealants per manufacturer's details.

PANELS - Structural Insulated Stress Skin Panel - A pressure laminated panel consisting of the following: Expanded polystyrene core - minimum of .95 pcf Certified EPS complying with ASTM C 578 (other densities may be specified). Must be certified code listed Type I .95 MV minimum. OSB - shall be identified on the panel with and APA performance rating mark, and described in APA PRP-108 or PS-2-92. Adhesives - shall be an approved laminating adhesive having an in-use temperature range of -40 degrees to +250 degrees Fahrenheit.

Fasteners - Shall be #14 corrosion resistant Premier Blue Screws for roof, corners, and attachment of panel to frames. In addition, zinc galvanized screws, nails, or staples for spline and plate attachments. All fasteners as supplied or approved by panel manufacturer following fastening requirements.

Caulk - Caulk compatible with all components of the panel and adjacent materials as supplied by the panel manufacturer and approved by PBS.

Foam Sealant - a sealant compatible with all components of the panel and adjacent materials as supplied by the panel manufacturer and approved by PBS.

Acceptable Manufacturer - Premier Building Systems (or equal), 4609 70th Ave. East Fife, WA 98424, Telephone: 253-926-2020; 800-275-7086

Thermal Characteristics -

Panel Thickness	R-Value at 75 F	R-Value at 40 F
6 ½"	23	24.00
8 ¼"	30	31.63
12 ¼"	45	48.31

Typical: Premier Panel Wall (or equal) 7/16" OSB both sides. Type I Certified EPS Core.

Panels are manufactured in order to create a 1/8" gap between sheathing edges to allow for movement and placement of caulk.

Structural Testing - Each panel type shown on the drawings shall meet or exceed performance standards when tested in accordance with the following methods: Compressive Load, Test Method: ASTM E72. Transverse Load, Test Method: ASTM E 72. Concentrated Load, Test Method: ASTM E 72. Racking Load, Test Method: ASTM E 72. Combined Axial and Bending, Test Method: ASTM E 72. Long Term Cold Creep Under Load, Test Method: ASTM E 72. Tension Testing, Test Method: ASTM C297. Impact Testing, Test Method: ASTM E 695. Accelerated Aging, Test Method: ASTM D 1183C. Insect Resistance Tests, Full Scale Roof/Floor Diaphragm; Test Method: ASTM E 455. Tested values shall meet or exceed those stated on manufacturer's Load Design Charts and applicable technical data reports.

INSTALLATION - Installation shall be in strict accordance with manufacturer's published instruction, details and the drawings that are part of the contract documents for this project. Panel drawings to be reviewed by contractor and approved, confirming all dimensions.

SECTION 074600 - METAL SIDING

QUALITY ASSURANCE - Installer's Qualifications: Installation of panels and accessories by installers with a minimum of 5 years experience on panel projects of this nature. Manufacturer's Qualifications: Manufacturer shall have a minimum of 10 years experience supplying metal siding to the region where the work is to be done.

SUBMITTALS: Product Data: Submit manufacturer's product specifications, standard details, certified product test results, installation instructions and general recommendations, as applicable to materials and finishes for each component and for total system of preformed panels. Samples: Submit 2 samples 12" square, of each exposed finish material. Shop Drawings: Submit small-scale layouts of panels on walls and large-scale details of edge conditions, joints, corners, custom profiles, supports, anchorages, trim, flashings, closures, and special details. Distinguish between factory and field assembly work. Provide manufacture standard color for selection by architect.

WARRANTY - Manufacturer's Product Warranty: Warrant for 20 years, following project delivery date, that panels will be free from defects, and that panels if properly installed will not rupture, fail structurally or perforate. Provide sample warranty. Installer's Warranty: Warrant panels, flashing, sealants, fasteners, and accessories against defective workmanship, and to remain watertight and waterproof with normal usage for two (2) years.

ACCEPTABLE MANUFACTURERS - Acceptable Manufacturers are limited to the following: METAL SALES Manufacturing Corporation; AEP Span; Ultra Seam; Alternate Brand Request or Substitution Request required.

Panel Designation -
1) T6-A Panel: Net coverage 36", rib depth 1-1/2".
2) Base Metal: Steel conforming to ASTM A792 Zincalume, grade 40 for 24 gauge. Protective Coating: Conform to ASTM A792, AZ50 (Zincalume,). For primers thicker than 0.5 mil, Conform to ASTM A653 (formerly ASTM A525) G-90 Galvanized.
3) Exterior Finish: DuraTech 5000 (polyvinylidine fluoride), full 70% Kynar 500/Hylar 5000 consisting of a baked-on 0.2 mil corrosion resistant primer and a baked-on 0.8 mil finish coat for a total of 1.0 mil dry film thickness, with a specular gloss of 10-15% when tested in accordance with ASTM D-523-89 at 60°.
4) Interior Finish: Primer Coat Material: Corrosion-resistant primer; primer coat dry film thickness: 0.15 mils; finish coat material; polyester paint, finish coat dry film thickness: 0.35 mils. Total Interior Dry Film Thickness; 0.50 mils. Color: Off-White.
5) Fabrication: Unless otherwise shown on drawings or specified herein, fabricate panels in continuous one-piece lengths and fabricate flashings and accessories in longest practical lengths. Siding panels shall be factory formed. Field formed panels are not acceptable.

FIELD MEASUREMENTS - Verify prior to fabrication. If field measurements differ from drawing dimensions notify Architect/Engineer prior to fabrication.

INSTALLATION (PANELS AND FLASHING) - Install per approved submittal drawings and manufacturer's installation instructions. Overlap flashing at least 6 inches. Discrepancies between job site conditions and drawings as approved shall be brought to the attention of the Architect or Architect's representative for resolution.

6) PANEL DAMAGE AND FINISH SCRATCHES - Touch up paint is not necessary for panels with minor scratches. Panels or flashings that have severe paint and/or substrate damage shall be replaced as directed by the Architect's or Owner's representative.

vision ARCHITECTURE

SCALE: AS SHOWN

CONSTRUCTION RECORD
FIELD BOOK
STAKING
FOREMAN
AS-BUILT
INSPECTOR

WASHETERIA AND WATER TANK

WASHETERIA SPECIFICATIONS

CHEFORNAK, ALASKA

CE2 ENGINEERS, INC.
PO BOX 232040 ANCHORAGE, AK 99523 PH: 907-349-1010 FAX: 907-349-1015

REVISION | BY | DATE

Project No.
Date August 29, 2016
Designed BT
Drawn CV
Approved BT

Sheet No.
A0.1
SHEET ____ OF ____

SECTION 076000 - FLASHING AND SHEET METAL

SYSTEM DESCRIPTION - Work of this Section is to physically protect roofing: base flashings and building systems from damage that would permit water leakage to building interior. Submit under provisions of Submittals, Shop Drawings, Product Data and Samples: Describe material profile, jointing pattern, jointing details, fastening methods, and installation details.

QUALITY ASSURANCE - Applicator Qualifications: Company specializing in sheet metal flashing work with three years minimum experience. Deliver products to site, store, handle, and protect. Prevent contact with materials during storage that may cause discoloration, staining, or damage. Fabricate and install sheet metal with lines, brakes, and angles sharp and true, and surfaces free form objectionable wave, warp, or buckle. Fold exposed edges of sheet metal back to form 1/2 inch wide hem on side concealed from view, or as indicated on drawings. Finish work shall be free from water leakage under all weather conditions. Where sheet metal abuts or joins adjacent dissimilar metals, execute joint to facilitate drainage and minimize possibility of galvanic action. Provide installers written warranty against defects in materials and workmanship for a period of not less than five (5) years. Heavy Coated Exposed Steel: Metal: 24 or 20 gauge galvanized steel. ASTM A 525. Grade A. G90 galvanized coating. Back coat: Epoxy primer, or approved equal. Plastic Cement: FS SS_C_153, Type I_asphaltic base cement. Reglets: Surface mounted galvanized steel; Type SM; manufactured by Fry; field paint to match adjacent parapet wall flashing.

Requirements shown by details are intended to establish basic dimension and profiles. Contractor shall be responsible for design of flashing and sheet metal assemblies and may make whatever modifications of and additions to details as may be required to prevent water and air penetration. Maintain visual design concept as shown.

SHEET METAL, FLASHING AND TRIM - Secure flashings in place using concealed fasteners. Use exposed fasteners only in locations approved by Architect. Seam and seal all joints. Fit flashings tight in place. Make corners square, surfaces true and straight in planes, and lines accurate to profiles. Slope top of all parapet wall coping 1/4 inch per foot toward building interior. Seal metal joints watertight. Parapet Wall Coping: Provide solid blocking to slope top of wall 1/4 inch per foot toward building. Install 6-inch wide back-up plates behind coping cross-joints. Install sealant between back-up plate and coping panel. Form cross-joints to comply with Plate 68 of the SMACNA manual. Lock front edge in continuous cleat. Miter, seam, and seal corners of coping. Metal Base Flashing: Install galvanized base flashing where roof meets vertical surface without a cant strip. Felt Flashing: Install between roofing membrane and sheet metal parapet coping. Overlap joints 6 inches minimum.

Protect installed work. Work which does become damaged in any way is not watertight shall be repaired and/or replaced as directed to satisfaction of Architect and/or Owner at no additional cost or time.

HEAVY COATED STEEL (20 gauge) - Roof caps, and all exposed sheet metal.

COATED STEEL (24 gauge) - All non-exposed components including roof counter flashing typical.

SECTION 078400 - FIRESTOPPING

SECTION INCLUDES - Furnishing and installing fireproof firestopping and firesafing materials and accessories to form an effective barrier against the spread of flame, smoke and gases, or maintain the integrity of fire resistance rated walls, partitions, floors and ceiling-floor assemblies.

SUBMITTALS - Product Data: Provide data on product characteristics, performance and limitation criteria. Manufacturer's Installation Instructions: Indicate preparation and installation instructions. Manufacturer's Certificate: Certify that products meet or exceed specified requirements.

QUALITY ASSURANCE - Qualifications: Manufacturer shall be a company specializing in manufacturing the products specified herein with a minimum of 3 years documented experience. Regulatory Requirements: Conform to the IBC for fire resistance ratings and surface burning characteristics.

Acceptable Manufacturers- Limited to the following: Hilti Construction Chemicals, Inc.; 3M Fire Protection Products; International Protective Coatings Corporation (IPC); Alternate Brand Request or Substitution Request required.

MATERIALS - Penetration Sealants/Putty: Non-combustible penetrating items (conduit, steel pipe, EMT, copper): Hilti FS 600 series Firestop Sealant; 3M Brand "Fire Barrier" Caulk CP-25, CP25WB, and Firestop Sealant 2000; IPC FS500/600, FS/FST900, FS1900, FSP1000, FSP1077, and IPC Mortar. UL Classification: Provide material classified by UL to provide firestopping equal to time rating of construction being penetrated. Primer: Type recommended by firestopping manufacturer for specific substrate surfaces. Firestopping materials shall be asbestos-free, emit no toxic or combustible fumes, and be capable of maintaining an effective barrier against flame, smoke, water and toxic gases. Firestopping materials/systems shall be flexible to allow for normal movement of building structure and penetrating item(s) without affecting the adhesion or integrity of the system.

Regulatory Requirements - Install penetration seal materials in accordance with published Through-Penetration Firestop Systems" in UL's Fire Resistance Directory.

Manufacturer's Instructions - Comply with manufacturer's instructions for installation of through-penetration seal materials. Seal all holes or voids made by penetrations to ensure an air, smoke and water-tight seal. Protect materials from damage on surfaces subjected to traffic. Tool surface of firestop materials, when applicable, to give a smooth, clean appearance. Install firestopping at locations shown or specified in accordance with manufacturer's written instruction. Cutting and patching of construction and providing sleeves, where required, are shown in Drawings or specified in other Sections.

LOCATIONS - Provide firestopping in the following locations:
1) Duct, conduit, tubing, cable and pipe penetrations through above grade floor slabs and through fire-resistance rated walls, partitions, and ceiling-floor assemblies.
2) Penetrations of vertical shafts such as pipe chases.
3) Gaps at perimeters of fire-resistance-rated partitions and fire walls, such as between the top of fire walls and the bottom of roof decks.
4) Other locations where required.

Electrical Cables or Conduits - Electrical cables or conduit penetrating fire resistance rated assemblies shall be firestopped as listed in the Underwriters Laboratories. Firestopping at penetrations shall also comply with the requirements of NFPA 70.

SECTION 079200 - JOINT SEALANTS

SUBMITTALS - Manufacturer's descriptive data for materials including backstop material, primer and sealer. Descriptive data for elastomeric sealants shall include shelf life and curing time. Submit certificates of compliance stating that the sealants conform to the specified requirements.

ENVIRONMENTAL REQUIREMENTS - Interior: Maintain temperature and humidity recommended by the sealant manufacturer during and after installation. Protect sealants until cured. Exterior: Do not proceed with installation of sealants during inclement weather unless the installation complies with the manufacturer's instructions. Do not proceed with the installation of sealants under extreme temperature conditions which may cause joint openings to be near either maximum or minimum width; nor when such extreme temperatures or high wind loads are forecast during period required for initial or nominal cure of elastomeric sealants. Schedule installation and cure of elastomeric sealants during period of relatively low temperatures (but well within manufacturer's recommended range) so that subsequent tensile stresses upon cured sealants will be minimized.

ACCEPTABLE MANUFACTURERS - Include, but are not limited to the following: DOW Corning Corporation; Pecora Corporation; Tremco Incorporated; Any other manufacturer meeting the requirements of the contract documents.

SEALANTS - Sealants shall be designed for adhesion to the surface to which they will be applied. They shall be non-staining, non-shrinking, and non-sagging, meeting the requirements specified herein.

1) Type A. Application: Joints of any material, width or degree of movement. System: Polysulphide base, two component sealant. Requirements: Chemical curing; conforming to requirements of FS SS-S-200, Class A; Shore A hardness of minimum 15 and maximum 50; non-staining; color as selected. Self-leveling type for application in horizontal joints; non-sagging type for application in vertical joints.

2) Type B. Application: Joints less than 3/4 inch in width with movements less than 10 percent. System: Acrylic base, single component, solvent curing sealant. Requirements: Conforming to requirements of FS TT-S-230, Type II, Class A; Shore A hardness of maximum 55; non-staining; non-bleeding; non-sagging; color as selected.

3) Type C. Application: Joints of any material less than 2 inches wide. System: Polyurethane base, multi-component, chemical curing sealant. Requirements: Conforming to requirements of FS TT-S-227, Class A; Shore A hardness of minimum 15 and maximum 50; non-staining; non-bleeding; color as selected. Self-leveling type for application in horizontal joints: non-sagging type for application in vertical joints.

4) Type D. Application: Joints less than 3/4 inch wide. System: Polyurethane base, single component, chemical curing sealant. Requirements: Conforming to FS TT-S-230; Shore A hardness of minimum 15 and maximum 50; non-staining; non-bleeding; color as selected. Self-leveling type for application in horizontal joints; non-sagging type for

5) Type E. Application: Narrow joints less than 3/8 inch where movement is expected. System: One part butyl vulcanized sealant. Requirements: Conforming to FS TT-S-001657, Type I.

SEALANT BACKING - An ASTM D1056/D1565 resilient urethane or polyvinyl chloride foam, closed-cell polyethylene foam, closed-cell sponge of vinyl or rubber, polychloroprene tubes or beads; polyisobutylene extrusions, or oilless dry jute or rope yarn. Use nonabsorbent, nonstaining backstop material that is compatible with the sealant used. Use polyisobutylene or polychloroprene rubber preformed support strips for expansion-joint.

EXAMINATION - The surfaces of joints to be sealed shall be dry. Remove oil, grease, dirt, chalk, particles of mortar, dust, loose rust, loose mill scale and other foreign substances from all joint surfaces to be sealed. Remove oil and grease with solvent and wipe surfaces with clean cloths.

PREPARATION - Remove all loose trim items, bead, molds, and the like. Clean joints and spaces to be sealed or calked free of dirt, dust, mortar, oil, and other deleterious substances which may impair bond or adversely affect the sealing work. Where necessary, degrease with an solvent or commercial degreasing agent. Apply sealants only to dry surfaces. Clean out joints, full width and depth. Rake joints to proper depth, permitting use of sealant backing and sealant of indicated depth. Fill depth of joint in back of sealant with sealant backing as specified. If recommended by the manufacturer, remove paint and other coatings from surfaces to be sealed prior to sealant application. Remove coatings on metallic surfaces with a solvent that leaves no residue. Enclose joints on three sides. Where grooves for adequate sealing have not been provided, clean out suitable grooves to depth required or as indicated on Contract Drawings and cut or ground to minimum width of 1/4 inch without damage to adjoining work. Restore any adjacent or connecting damaged work resulting from cutting or grinding.

INSTALLATION - Provide sealants in joints as indicated or specified. The joint design, shape, and spacing shall be as indicated. Mix in compliance with instructions provided by the manufacturer of the sealants. Sealant shall bond the two opposing surfaces of the joint. Install bond-preventive materials for sealant on the bottom of the joint cavity and other surfaces indicated to prevent the sealant form adhering to the surfaces covered by the bond-preventive materials. Tool sealants in joints flat or slightly concave using a blunt tool or roller. Calk and inspect joints in back of applied trim is permanently installed.

INTERIOR JOINTS - Apply sealants at exposed joints at interior locations where there are voids between materials.

EXTERIOR JOINTS - Seal all exterior joints where sealant is called for.

ACOUSTICAL SEALANT - Acoustical sealant is intended for partition systems where specific sound insulation is noted. Apply acoustical sealant herein, only to concealed surfaces in compliance with ASTM C919. Gun a full bead into joints so noted or openings, or both. Cover piping and backs of electrical boxes with a sealant and perimeters sealed.

SECTION 081000 - METAL DOORS AND FRAMES

GENERAL - This Specification provides at the Contractor's option the use of "stock" hollow metal of the series listed below. The following materials text is prepared using specific manufacturer's model numbers (Curries). This is only for convenience and to establish acceptable standards; similar or equal by other approved manufacturers is implied.

DOORS - Flush construction 1-3/4" thick, ANSI/SDI-100 Curries 707S Series: At exterior locations: 16 gauge, "U" factor of 0.35, Level 2, Model 1 galvanized per ASTM A-625, A60 after hardware preparation. Wipe coat not an acceptable substitution for galvanizing.

FRAMES - Minimum Acceptable Gauge for door frames: 16 gauge exterior, Level 2, Model 1.. Types of Frames: K.D. or welded type at contractor's option, 2" face, drywall type where applicable. All exterior frames to be thermally broken type.

Provide commercial grade hardware: butts, lockset, cylinder/core, kick plate, door stop, door silencers, and weatherstrip and threshold. Install according to NBHA and ADA requirements.

Install hollow metal units and accessories plumb and true, in accordance with final shop drawings and manufacturer's data.

082100 - WOOD DOORS

GENERAL - All labor and materials necessary for and incidental to the fabrication and installation of all wood doors shown on Contract Drawings.

MANUFACTURERS - Doors as manufactured by one of the following, or approved equal: Eggers, Graham, or Weyerhaeuser.

DOORS - All doors shall meet or exceed the NWWDA IS-1-87 as applicable. All doors pre-machined, pre-fitted, and pre-finished at plant. Pre-finish shall be manufacturer's standard stain, sealer and synthetic lacquer in satin finish. All doors shall be solid core, premium grade, plain sliced, red oak. Guarantee: Life of original installation. Non-rated Interior Swinging Doors: Weyerhaeuser, DPC-1 Series 1-3/4" thick.

FRAMES - Frames are to be properly installed with square corners, plumb sides, level head, securely installed, and of proper size and hand as scheduled and shown. Do not install doors in improperly installed frames. Install finish hardware and complete installation. Make sure door is not hinge bound, swings freely, latches properly.

ADJUST AND CLEAN - Re-hang or replace doors that do not swing or operate freely. Follow proper procedures required for protection of installed wood doors from damage or deterioration until acceptance of work.

SECTION 085310 - VINYL WINDOWS

GENERAL - Provide vinyl window system complete with glazing, hardware and accessories as specified and indicated on drawings.

SUBMITTALS - Provide construction details, material descriptions, glazing and fabrication methods, dimensions of individual components and profiles, hardware and finishes for vinyl windows.

SHOP DRAWINGS - Include plans, elevations, sections, hardware, accessories, insect screens, operational clearances and detail of installation, including anchor, flashing and sealant installation.

QUALITY ASSURANCE - Manufacturer capable of fabricating vinyl windows that meet or exceed performance requirements indicated and of documenting this performance by test reports and calculations. Installer must be acceptable to vinyl window manufacturer for installation of units for this project.

WARRANTY - Manufacturer agrees to repair or replace vinyl windows that fail in materials or workmanship within five (5) years from date of substantial completion. Failures include, but are not limited to: failure to meet performance requirements, structural failures including excessive deflection, water leakage and air infiltration, faulty operation of movable sash and hardware, deterioration of materials and finishes beyond normal weathering and failure of insulating glass.

MANUFACTURERS - Northern Series 3800 Casement and Picture Window or approved equal. Obtain vinyl windows from single source from single manufacturer.

VINYL WINDOWS -
1) Operating Types
 Casement: project out.
2) Frames and Sashes
 a. Impact-resistant, UV-stabilized PVC complying with AAMA/WDMA/CSA 101/I.S.2/A440.
 b. Finish: integral color, white.
3) Glass
 a. Clear annealed glass, ASTM C 1036, Type 1, Class 1, q3 at interior.
 b. Kind: fully tempered.
4) Insulating-Glass Units
 a. ASTM E2190.
 b. Glass: ASTM C 1036, Type 1, Class 1, q3 at exterior, R-Value 3.7
 c. Tint: Clear.
 d. Kind: Fully tempered in locations required by code
 e. Filling: Fill space between glass lites with argon gas.
 d. Coating: Soft coat Low E Pyrolytic on second surface.
 e. Glazing System: Manufacturer's standard factory-glazing system that produces weathertight seal
 f. Hardware: Manufacturer's standard.

INSECT SCREENS - Fabricate insect screens to fully integrate with window frame. Provide screen for each operable exterior sash. Screen wickets are not permitted. Type and location: Full, inside for project-out.

INSTALLATION - Per manufacturer's recommendations.

ADJUSTING, CLEANING AND PROTECTION - Adjust operating sashes and hardware for a tight fit at contact points and weather stripping for smooth operation and weathertight closure. Clean exposed surfaces immediately after installing windows. Remove excess sealants, glazing materials, dirt and other substances. Keep protective films and coverings in place until final cleaning. Remove and replace sashes if glass has been broken, chipped, cracked, abraded or damaged during construction period.

08710- FINISH HARDWARE

Comply with all applicable codes.

Hardware Schedule - Submit the finish hardware schedule, organized into "hardware groups" and indicating complete designation of every item required for each door or opening. Hardware groups to be based on materials and recommended manufacturers. Submit a keying schedule in accordance with review with Owner's Representative.

Supplier - Finish hardware shall be supplied by recognized builders' hardware supplier who has been furnishing hardware in the same area as the project for not less than 2 years. Provide finish hardware of standard-duty commercial interior door. Complies with ANSI A156.2, Grade 2 and A117.1 accessibility code. Installer: Finish hardware shall be installed only by experienced tradesmen. Codes: All finish hardware shall comply with applicable local or state, or both, current building codes and all hardware shall have lever action handle.

Fasteners - All hardware screws shall be Phillips head, and all surface type hardware on doors shall be through-bolted with "shoulder" type bolts. Butts: Best or equal. Locksets: Schlage. Door Closers: LCN or equal. Stops, Holders and Miscellaneous: Glynn Johnson or equal. Weatherstrip and Threshold: Pemko or equal. Door Silencer: Builder's Brass or equal. Quantity: Furnish three (3) for each single door frame, and four (4) for each pair of door frames.

Keying - Hardware supplier shall meet with the Owner's Representative to prepare the keying schedule.

HARDWARE GROUPS - Hardware groups to be based on materials and recommended manufacturers.
1) HW 1 - Exterior
 1-1/2 pair Butts
 1 Lockset
 1 Closer
 1 Kickplate
 1 Weatherstrip
 1 Threshold
 1 Deadbolt (mechanical rooms only)

2) HW 2 - Interior (Toilet Rooms)
 1-1/2 pair Butts
 1 Lockset (Privacy)
 1 Wall Stop

3) HW 3 - Interior (Storage/Dryer Mechanical)
 1-1/2 pair Butts
 1 Lockset (Keyed)
 1 Wall Stop

4) HW 4 - Interior Office (Dutch)
 2 pair Butts
 1 Lockset
 1 Latch Bolt (Pairing Dutch Door Leafs)
 2 Wall Stops (eg Leaf)

5) HW5 - Vestibule
 1-1/2 Pair Butts
 1 Latchset
 1 Closer
 1 Kick Plate

vision ARCHITECTURE

SCALE: AS SHOWN

CONSTRUCTION RECORD | FIELD BOOK | STAKING | FOREMAN | AS-BUILT | INSPECTOR

WASHETERIA AND WATER TANK

WASHETERIA SPECIFICATIONS

CHEFORNAK, ALASKA

CE2 ENGINEERS, INC.
PO BOX 232940 ANCHORAGE, AK 99523 PH: 907-349-1010 FAX: 907-349-1015

REVISION | BY | DATE

Project No. ____
Date August 29, 2016
Designed BT
Drawn CV
Approved BT

Sheet No. A0.2
SHEET ____ OF ____

088000 - GLASS AND GLAZING

GENERAL - Provide glass of size/thickness to withstand dead loads and positive and negative live loads acting normal to plane of glass as calculated in accordance with ICC to a design pressure of +40psf and -20psf as measured in accordance with ASTM E330. Limit glass deflection to Flexure Limit of glass with full recovery of glazing materials. Watertight and airtight installation of each piece of glass is required.

WARRANTY - Provide written warranty, signed by Contractor and Glazier; agreeing to, within warranty period, replace/repair defective materials and workmanship. Warranty includes responsibility for removal and replacement of stops, glass and other work (if any) that conceals or obstructs the proper replacement of defective glazing materials. Warranty period is 5 years after date of Substantial Completion.

Shop Drawings - Indicate installation details, including size/thickness mounting and accessories. Product Data: Complete manufacturer's specifications and certification of conformance to this Specification.

Acceptable manufacturers - PPG Industries, Inc. or equal.

Provide glass in sizes required for glazing openings as shown, with edge clearance and tolerances complying with details shown and manufacturer's recommendations.

Float glass - Provide type 1 Quality q3 clear with light transmittance of not less than eighty-nine (89) percents for ¼ inch thickness, unless otherwise noted.

SECTION 092500 - GYPSUM WALLBOARD

GENERAL - Provide gypsum wallboard, accessories and gypsum wallboard finishing as indicated on the drawings, as specified in this section and as needed for a complete and proper installation.

Ambient Temperature for Finishing - Gypsum wallboard finishing work shall be provided ONLY when the ambient controlled air temperature is no less than 50 degrees F and rising.

Gypsum Wallboard - Provide gypsum wallboard complying with ASTM C36 and Fed. Spec. SS-L-30D, in 48" widths and in such lengths as will result in a minimum of joints. Fire-retardant wallboard - provide Type III, Grade X, Class 1, UL listed, 5/8" thick. (Water resistance gypsum board as noted on drawings.)

Joint System - Provide a jointing system, including reinforcing tape and compound, designed as a system to be used together and as recommended for this use by the gypsum wallboard manufacturer and approved for use on this work.

Fastening - For fastening gypsum wallboard in place on wood use 1-1/4" Type W bugle-head screws or use annular ring type nails complying with ASTM C514.

Gypsum Wallboard Finishing Compound - Provide a Gypsum Association Level 3 gypsum board finish.

SECTION 096500 - RESILIENT FLOORING AND MATTING

GENERAL - Provide resilient flooring as shown or specified and in accordance with the Contract Documents.

Colors and Patterns - As selected from manufacturer's standard colors.

Sheet Vinyl Flooring - Shall conform to FS L-F-475, Type II, Grade A, similar and equal to "Armstrong, Classic Corlon". Sheet vinyl flooring shall be not less than 72" wide.

Adhesives - Waterproof, stabilized type as recommended by the flooring manufacturers to suit material and substrate conditions.

Primer - As recommended by resilient flooring manufacturer.

Installation - Adhesive: Apply to substrate with properly notched steel trowels; allow adhesive to become tacky before applying resilient flooring. Extend resilient flooring into closets and offsets, and under movable equipment of the rooms and spaces shown or scheduled to receive resilient flooring. Sheet Vinyl: Install per manufacturer's recommendations and at perimeter walls cove material up for a 6" high base, topped with metal trim cap. Anchor strips solidly to substrate with adhesive as recommended by manufacturer

Cleaning and Protection - Remove any excess adhesive or other surface blemishes, using neutral type cleaners as recommended by flooring manufacturer. Protect installed flooring with heavy Kraft paper or other covering.

SECTION 096550 - RESILIENT BASE

All labor, materials, equipment and services necessary to furnish and install all resilient base and related items.

Molded rubber cove base as manufactured by Roppe or equal, standard toe and no toe, 4" high x 1/8" thick and matching performed external corners. Color as selected from manufacturer's total line.

Inspect all surfaces to receive tile base and report all defects that will affect the installation. Contractor shall repair any defects that appear in the surface after completion.

After preparation of wall surfaces, apply adhesive to back of base leaving top 1/4" free of adhesive. Roll the entire surface of the base with a hand roller, and press the top of the base against the wall with a straight edge. Remove excess adhesive immediately. Install pre-formed corners at all outside corners. Cope at internal corners.

SECTION 099000 - PAINTING AND FINISHING

GENERAL - Provide all materials, labor, equipment, service, scaffolding, and the like, necessary and incidental to the completion of all painting and finishing as shown on the Drawings and as specified herein. It is the intent of this Section to provide finish for all materials, factory primed or unfinished, or both, unless specifically stated as not requiring finish. Omission of specific surfaces from Schedule of Finishes or Finish Schedule is NOT to be interpreted to mean the finish is not required.

Submittals - complete materials listing and manufacturer's printed information showing conformance to this Specification.

Paint - Use first line materials of the following manufacturers, and as listed in schedule: ICI Dulux, Glidden Company, PPG, Fuller O'Brien. Use products of the same manufacturer for succeeding coats of particular application.

CLEANING - All surfaces shall be clean and free of foreign matter before application of paint or surface treatments. Oil and grease shall be removed with clean cloths and cleaning solvents prior to mechanical cleaning. Fill dents, cracks, hollow places, open joints and other irregularities with a filler suitable for the purpose and after setting, sand to a smooth, hard finish. Concrete, Synthetic Plaster and Masonry Surfaces: Surfaces shall be allowed to dry at least 30 days before painting.

Ferrous Surfaces - Ferrous surfaces that have been shop-coated shall be solvent cleaned, in accordance with SSPC SP 1. Galvanized and Nonferrous Surfaces: Galvanized, aluminum and aluminum-alloy, lead, copper, and other nonferrous surfaces to be painted shall be solvent-cleaned in accordance with SSPC SP 1 and treated with a vinyl-type wash coat meeting the requirements of SSPC Paint 27.

Surfaces that have been cleaned, pretreated, and otherwise prepared for painting shall be given a coat of the specified first coat as soon as practical, and prior to any deterioration of the prepared surface. Allow coats to dry thoroughly before succeeding coats are applied; allow a minimum of 24 hours between applications on any one surface, unless otherwise specified manufacturer.

Schedule of Finishes for Interior Surfaces
On metal surfaces - One coat enamel undercoat, one coat alkyd eggshell enamel.
On gypsum drywall - one coat latex, primer sealer, two coats latex, semi-gloss.
On plywood - one coat latex, undercoat, two coats latex, semi-gloss.

Schedule of Finishes for Exterior Surfaces
Ferrous metal surfaces - one coat alkyd metal primer, two coats gloss enamel.
1) Galvanized Metal - one coat zinc dust zinc-oxide primer, two coats gloss enamel.

SECTION 102800 - TOILET, BATH, AND LAUNDRY ACCESSORIES

SUBMITTALS - Product Data: for each type of product. Samples: Full size, for each exposed product and for each finish specified.

PUBLIC USE WASHROOM ACCESSORIES:
1) Paper Towel Dispenser: Equal to Bobrick B-262 Stainless Steel surface mounted.
2) Toilet Tissue Dispenser: Equal to Bobrick B-2888 Stainless Steel surface mounted multi-roll.
3) Waste Receptacle: Equal to Bobrick B-279 Stainless Steel surface mounted.
4) Liquid Soap Dispenser: Equal to Bobrick B-132 Stainless Steel surface mounted.
5) Grab Bar: Equal to Bobrick B-5806 Stainless Steel 1 ¼" diameter with snap flange.
6) Sanitary-Napkin Disposal Unit: Equal to Bobrick B-270 Stainless Steel surface mounted
7) Mirror Unit: Equal to Bobrick B-165 Stainless Steel channel frame.
8) Robe Hook: Equal to Bobrick B-818 Stainless Steel.
9) Pipe Protection Enclosure: Equal to TruBro insulated pipe protection.

10)INSTALLATION - Install accessories according to manufacturers' written instructions, using fasteners appropriate to substrate indicated and recommended by unit manufacturer. Install units level, plumb and firmly anchored in locations and at heights indicated. Grab Bars - install to withstand a downward load of at least 250 lbf (1112 N), when tested according to ASTM F 446.

SECTION 105220 - FIRE EXTINGUISHERS, CABINETS, AND ACCESSORIES

Acceptable Manufacturers - Amerex or J.L. Industries.

Fire Extinguisher - UL Rating: 4 A-60BC; Capacity: 10 lbs.; Multi-Purpose Dry Chemical

Cabinets - Metal: Formed sheet steel, primed; 18 gauge thick base metal; Configuration: Sized to accommodate accessories; Door: 18 gage thick, reinforced for flatness and rigidity; latch lock with full glass access; Door Glazing: Glass, clear, 1/8 inch thick tempered; Cabinet Mounting Hardware: Appropriate to cabinet; Extinguisher Bracket: Formed steel galvanized finish.

Form cabinet enclosure with right angle inside corners and seams. Form perimeter trim and door stiles.

Finishes - Extinguisher: Steel polished chrome; Cabinet Exterior Trim and Door: Baked enamel; Cabinet Interior: Baked enamel.

vision ARCHITECTURE

SCALE:
AS SHOWN

CONSTRUCTION RECORD
FIELD BOOK
STAKING
FOREMAN
AS-BUILT
INSPECTOR

WASHETERIA AND WATER TANK

WASHETERIA SPECIFICATIONS

CHEFORNAK, ALASKA

CE2 ENGINEERS, INC.
PO BOX 232949 ANCHORAGE, AK 99523 PH: 907-349-1010 FAX: 907-349-1015

REVISION	BY	DATE

Project No. ____
Date August 29, 2016
Designed BT
Drawn CV
Approved BT

Sheet No.
A0.3
SHEET ____ OF ____

CODE ANALYSIS

PROJECT: CHEFORNAK WASHETERIA

APPLICABLE CODES:

INTERNATIONAL BUILDING CODE	2009 EDITION
INTERNATIONAL MECHANICAL CODE	2009 EDITION
NATIONAL ELECTRICAL CODE	2006 EDITION
UNIFORM PLUMBING CODE	2001 EDITION
INTERNATIONAL FIRE CODE	2009 EDITION
INTERNATIONAL FUEL GAS CODE	2009 EDITION
ADA - ACCESSIBILITY GUIDELINES FOR BUILDINGS AND FACILITIES	2009 EDITION

CONSTRUCTION TYPE: V-B

BUILDING OCCUPANCY: B (LAUNDRY)
S-1 (STORAGE)

GROSS BUILDING AREA: 1512 S.F.

BASIC ALLOWABLE HEIGHT AND AREA PER TABLE 503

ALLOWABLE AREA: 9,000 S.F. (B) - NO AREA INCREASE CALCULATIONS MADE
9,000 S.F. (S-1) - NO AREA INCREASE CALCULATIONS MADE

OCCUPANCY SEPARATION
PER 508.3.2 NON-SEPARATED OCCUPANCIES

NO SEPARATION REQUIRED.

INCIDENTAL USE AREA SEPARATION (PER 508.2.5 & TABLE 508.2.5)

BOILER ROOM EQUIPMENT ROOM < 15 PSI AND 10 HP

FURNACE < 400,000 BTU

NO RATED WALLS REQUIRED

LAUNDRY ROOM >100 S.F. (NON-SPRINKLERED) PER 508.5 FIRE RESISTANCE SEPARATION CONSTRUCTION SUPPORTING 1 HOUR FIRE RESISTANCE USED FOR INCIDENTAL ACCESSORY OCCUPANCY SEPARATION IN BUILDINGS OF TYPE II-B, III-B, AND V-B ARE NOT REQUIRED TO BE FIRE RESISTANCE RATED.

PLUMBING FIXTURES (CHAPTER 29)

BASED ON HIGHEST DEMAND OF B OCCUPANCY.

OCCUPANTS:

LAUNDRY B OCC. : 105 ÷ 100 SF/OCC. = 1.05

S OCC. : 389 ÷ 500 = .78

TOTAL OCCUPANT LOAD = 1.82 = 8 OCC.

PER 2902.2 SEPARATE FACILITIES EXCEPTION 2

SEPARATE FACILITIES FOR EACH SEX NOT REQUIRED SINCE TOTAL EMPLOYEE AND CUSTOMER COUNT IS LESS THAN 15.
TWO SEPARATE FACILITIES ARE PROVIDED.
DRINKING FOUNTAIN NOT REQUIRED WITH OCC. LOAD LESS THAN 15.

VENTILATION : 1203
ATTIC VENT : 1/300 OF AREA W/ 50 % 3'-0" ABOVE EAVE VENT AND 50 % AT EAVE
W/ 363 S.I. AT EAVE AND 363 S.I. AT RIDGE
TOTAL AREA REQUIRED AT EAVE AND RIDGE = 129.16 S.I.

WINDOW NOTES:

1. INSERT WINDOW TO INTERIOR SIDE OF WALL. REMOVE NAILING FIN AND INSTALL PER MANUF. RECOMMENDATION. EXTEND EXTERIOR BRICK MOULDING AROUND WINDOW OPENING TO PROVIDE FULL WEATHER PROTECTION.
2. WINDOW FRAME TO BE FLUSH WITH GWB WALL SURFACE. PROVIDE SEALANT AROUND ENTIRE WINDOW AT WALL.
3. SEE INSTALLATION DETAIL 4/A13

GLASS SCHEDULE

TYPE A	DOUBLE PANE LOW "E" INSULATED GLASS W/ TINTED VISION EXTERIOR & CLEAR INTERIOR.
TYPE B	1" THICK TEMPERED INSULATED GLASS W/ TINTED VISION EXTERIOR & CLEAR INTERIOR.
TYPE C	1/4" SAFETY GLASS, INTERIOR ONLY.

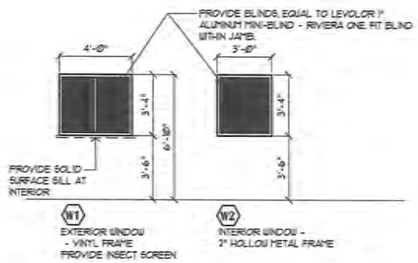

4 WINDOW SCHEDULE/TYPES

SCALE: 1/4"=1'-0"

DOOR NOTES:

- PROVIDE THERMAL BREAK THRESHOLD AT ALL EXTERIOR DOORS
- PROVIDE WEATHER SEALS AND BOTTOM SWEEP AT ALL EXTERIOR DOORS.
- PROVIDE COPPER COATED MICROBIAL LEVER TYPE HARDWARE ON ALL DOORS.
- ALL KEYING TO BE COORDINATED W/ BUILDING OWNER/USER.
- HM FRAMES TO FULLY WRAP WALL OPENING
- SEE INSTALLATION DETAIL 4/A13

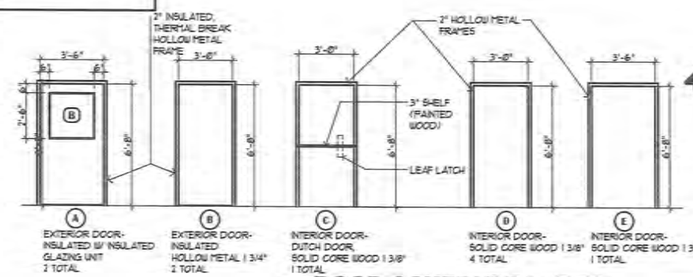

3 DOOR SCHEDULE/TYPES

SCALE: 1/4"=1'-0"

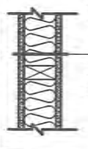

SOUND PARTITION ASSEMBLY

WALL ASSEMBLY
- 5/8" GWB. TYP "X"
- 2 x 4 WD. STUDS AT 16" O.C.
- SOUND BATT INSULATION (R-13)
- 5/8" GWB. TYPE "X"

A — AS SHOWN

A1 — SIMILAR TO A - REPLACE 5/8" GWB TYPE "X" W/ 5/8" MOISTURE RESISTANT GWB (WET SIDE)

A2 — SIMILAR TO A1 - FURRED WALL LOCATION-ONIT GWB ONE SIDE

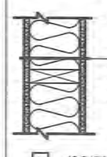

SOUND PARTITION ASSEMBLY

WALL ASSEMBLY
- 5/8" GWB. TYP "X"
- 2 x 6 WD. STUDS AT 16" O.C.
- SOUND BATT INSULATION (R-19)
- 5/8" GWB. TYPE "X"

B — AS SHOWN

B1 — SIMILAR TO B - REPLACE 5/8" GWB TYPE "X" W/ 5/8" MOISTURE RESISTANT GWB

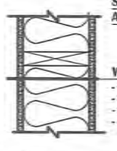

SOUND PARTITION ASSEMBLY

WALL ASSEMBLY
- 5/8" MOISTURE RESISTANT GWB (WET SIDE)
- 2 x 8 WD. STUDS AT 16" O.C.
- SOUND BATT INSULATION (R-24)
- 5/8" GWB. TYPE "X"

C — AS SHOWN

C1 — SIMILAR TO B1 - TO BE 1 HOUR FIRE BARRIER UL #U419. PROVIDE FIRE TAPE AT GWB. INSTALL SMOKE/FIRE STOPPING AT TOP AND BOTTOM OF WALL (BOTH SIDES) & AROUND ALL PENETRATIONS. FIRE CAULK ALL PENETRATIONS.

WALL TYPES-GENERAL NOTES:
1. WET SIDE OF WALL REFERS TO TOILET/SHOWER ROOMS AND LAUNDRY ROOMS
2. ALL GWB TO BE TYPE "X"
3. CONTRACTOR TO PROVIDE BACKING AS REQUIRED FOR ALL WALL MOUNTED FIXTURES AND EQUIPMENT. BACKING NOT IDENTIFIED IN WALL TYPES, COORDINATE W/ INTERIOR ELEVATIONS AND MANUFACTURER CUT SHEETS.
4. FIRE BLOCK RATED PARTITIONS @ 10'-0"
5. REFER TO BUILDING AND WALL SECTIONS FOR EXTERIOR WALL ASSEMBLIES.

2 WALL TYPES

SCALE: 1"=1'-0"

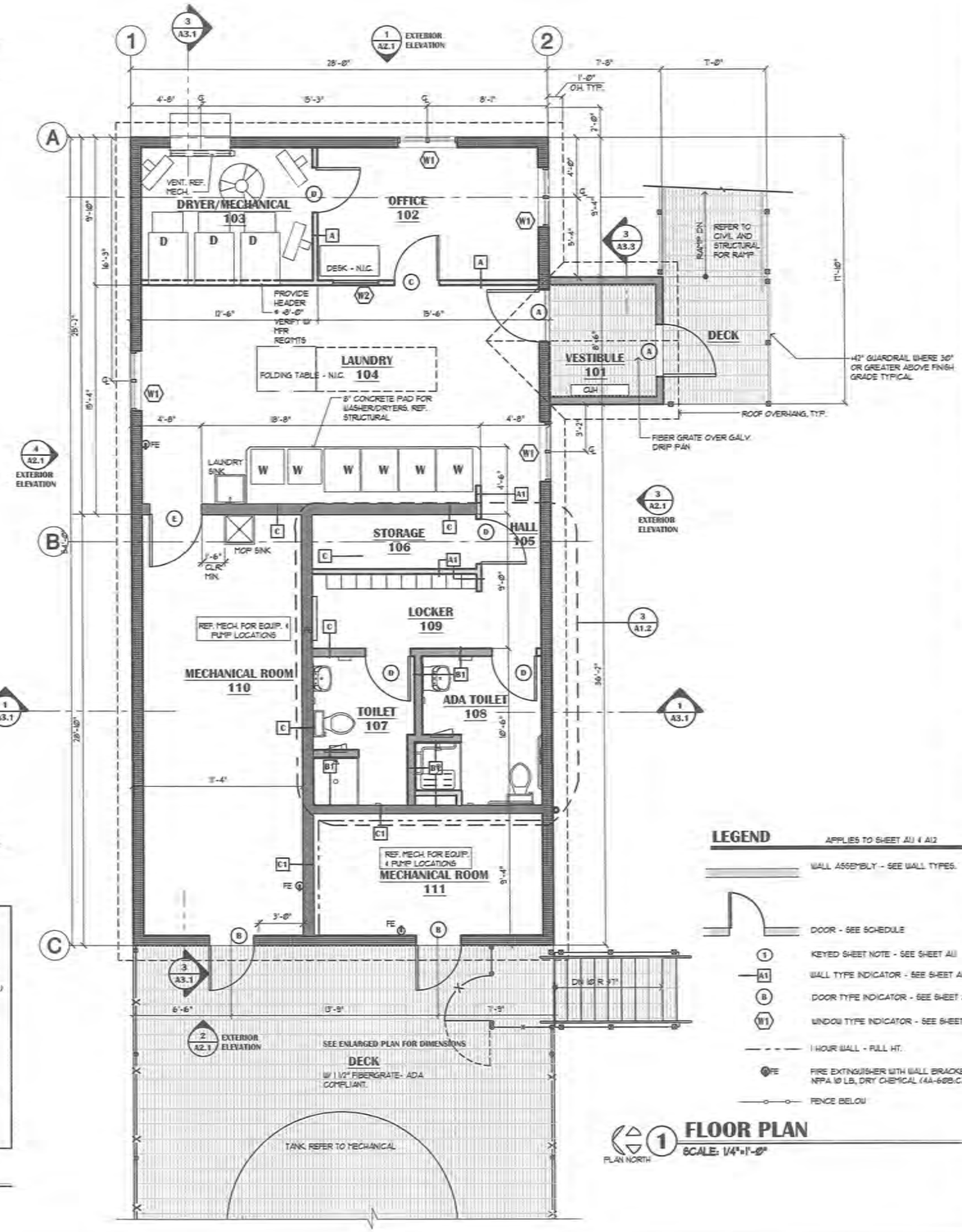

1 FLOOR PLAN

SCALE: 1/4"=1'-0"

LEGEND APPLIES TO SHEET A1.1 & A1.2

- WALL ASSEMBLY - SEE WALL TYPES.
- DOOR - SEE SCHEDULE
- 1 KEYED SHEET NOTE - SEE SHEET A1.1
- A1 WALL TYPE INDICATOR - SEE SHEET A1.1
- B DOOR TYPE INDICATOR - SEE SHEET A1.1
- W1 WINDOW TYPE INDICATOR - SEE SHEET A1.1
- 1 HOUR WALL - FULL HT.
- FE FIRE EXTINGUISHER WITH WALL BRACKET NFPA 10 LB. DRY CHEMICAL (4A-60B:C)
- FENCE BELOW

Revision ARCHITECTURE

SCALE: AS SHOWN

CONSTRUCTION RECORD
FIELD BOOK
STAKING
FOREMAN
AS-BUILT
INSPECTOR

STATE OF ALASKA

WASHETERIA AND WATER TANK

WASHETERIA FLOOR PLAN

CHEFORNAK, ALASKA

CE2 ENGINEERS, INC.
PO BOX 223246 ANCHORAGE, AK 99522 PH 907-349-1010 FAX: 907-349-1015

REVISION	BY	DATE

Project No. ____ Date August 29, 2016
Designed BT
Drawn GV
Approved BT

Sheet No. A1.1
SHEET ____ OF ____

ROOM FINISH SCHEDULE

NO.	ROOM NAME	FLOOR		WALLS									CEILING				REMARKS
	WALL DESIGNATIONS GENERALLY CORRESPOND TO THE FOLLOWING ROOM ELEVATIONS: "A" = NORTH "B" = EAST "C" = SOUTH "D" = WEST	MATERIAL	FINISH	BASE DESIGNATION	WALL "A" MATERIAL	WALL "A" FINISH	WALL "B" MATERIAL	WALL "B" FINISH	WALL "C" MATERIAL	WALL "C" FINISH	WALL "D" MATERIAL	WALL "D" FINISH	MATERIAL	FINISH	FIRE RATING	HEIGHT	
101	VESTIBULE	PLYWD	GT	RB	GWB	PT	GWB	PT	GWB	PT	GWB	PT	GWB	PT	--	VARIES	NOTE 4
102	OFFICE	PLYWD	SV	RB	GWB	FRP/PT	GWB	FRP/PT	GWB	FRP/PT	GWB	FRP/PT	GWB	PT	--	VARIES	NOTE 1, 5
103	DRYER/MECHANICAL	PLYWD	SV	RB	GWB	PT	GWB	PT	GWB	PT	GWB	PT	GWB	PT	--	VARIES	NOTE 5
104	LAUNDRY	PLYWD	SV	RB	GWB	FRP/PT	GWB	FRP/PT	GWB	FRP/PT	GWB	FRP/PT	GWB	PT	--	VARIES	NOTE 1, 5
105	HALL	PLYWD	SV	RB	--	--	GWB	FRP/PT	GWB	FRP/PT	GWB	FRP/PT	GWB	PT	--	VARIES	NOTE 3, 5
106	STORAGE	PLYWD	SV	RB	GWB	PT	GWB	PT	GWB	PT	GWB	PT	GWB	PT	--	VARIES	NOTE 5
107	TOILET	PLYWD	SV	CB	MRGWB	FRP/PT	MRGWB	FRP/PT	MRGWB	FRP/PT	MRGWB	FRP/PT	MRGWB	PT	--	VARIES	NOTE 1, 3, 5
108	ADA TOILET	PLYWD	SV	CB	MRGWB	FRP/PT	MRGWB	FRP/PT	MRGWB	FRP/PT	MRGWB	FRP/PT	MRGWB	PT	--	VARIES	NOTE 1, 3, 5
109	LOCKER	PLYWD	SV	RB	GWB	PT	--	--	GWB	FRP/PT	GWB	FRP/PT	GWB	PT	--	VARIES	NOTE 1, 5
110	MECHANICAL ROOM	PLYWD	SV	RB	GWB	FRP/PT	GWB	FRP/PT	GWB	FRP/PT	GWB	FRP/PT	GWB	PT	--	VARIES	NOTE 1, 5
111	MECHANICAL ROOM	PLYWD	SV	RB	GWB	PT	GWB	PT	GWB	PT	GWB	PT	GWB	PT	1 HR.	VARIES	NOTE 5

NOTES:
1. PROVIDE FRP UP TO 48'-0".
2. NOT USED
3. PROVIDE WELDED SEAM, WATER TIGHT GALV. DRIP PAN- SEE 3/A3.3
4. PROVIDE T&G BIRCH UNDERLAYMENT BELOW ALL SHEET VINYL

ABBREVIATIONS:

CB	9" COVED BASE	MRGWB	MOISTURE RESISTANT GYPSUM WALL BOARD		
FF	FACTORY FINISH				
GWB	GYPSUM WALL BOARD	PLYWD	PLY WOOD - REF STRUCT.	SV	SHEET VINYL
GT	1 1/2" FIBER GRATE ADA COMPLIANT	PT	PAINT	WD	WOOD
		RB	4" RUBBER BASE	WOM	WALK OFF MAT
FRP	FIBERGLASS REINFORCED PANEL - 10'-0" SHEETS				

KEYED SHEET NOTES

1. NOT USED
2. GUARD RAIL - HOLD TERMINAL POST 4" BACK FROM FACE OF PLYWOOD TO ALLOW FOR METAL SIDING INSTALLATION.
3. HOLD DECK FRAMING BACK FROM WALL TO ALLOW FOR METAL SIDING CLEARANCE. AT DOOR OPENINGS, EXTEND METAL GRATE TO FACE OF BUILDING AND PROVIDE FRAMING CLIP TO RECEIVE

FIXTURE SCHEDULE

REFERS TO SHEETS A1.2 AND A1.3

- A GRAB BAR - 42" (ADA COMPLIANT-HORIZONTALLY MOUNTED)
- B GRAB BAR - 36" (ADA COMPLIANT-HORIZONTALLY MOUNTED)
- C GRAB BAR 18" (ADA COMPLIANT-VERTICALLY MOUNTED)
- D ADA TOILET
- E STANDARD TOILET
- F ADA 42"x42" SHOWER SURROUND W/ INTEGRAL FLOOR
- G STANDARD 36"x36" SHOWER SURROUND W/ INTEGRAL FLOOR
- H ADA FOLDING SHOWER SEAT
- I 24"x36" MIRROR W/ 1" EDGE - LOCATE ABOVE LAVATORY
- J PIPE PROTECTION ENCLOSURE - AT EACH LAVATORY
- K SOAP DISPENSER
- L TOILET PAPER DISPENSER
- M SURFACE MOUNTED PAPER TOWEL DISPENSER
- N SURFACE MOUNTED TRASH RECEPTACLE
- P WALL MOUNTED SINK, REFER TO A1.3 FOR MOUNTING HEIGHTS
- Q SANITARY NAPKIN DISPENSER
- R TOWEL/ROBE HOOK
- S VALVE ACCESS PANEL (LOCKABLE)

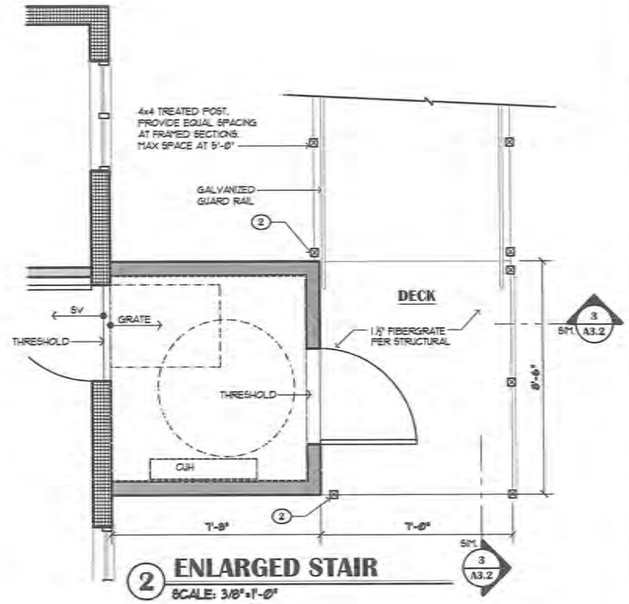

2 ENLARGED STAIR
SCALE: 3/8"=1'-0"

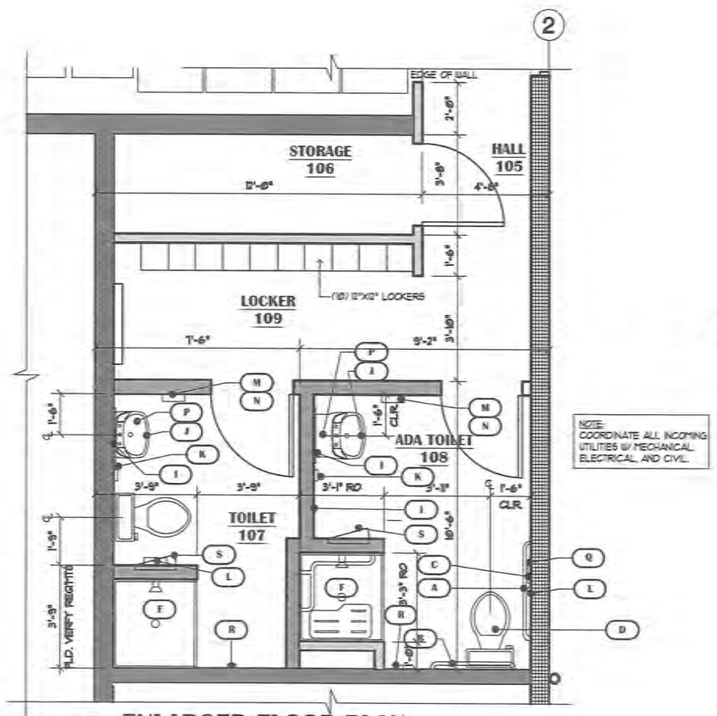

3 ENLARGED FLOOR PLAN
SCALE: 3/8"=1'-0"

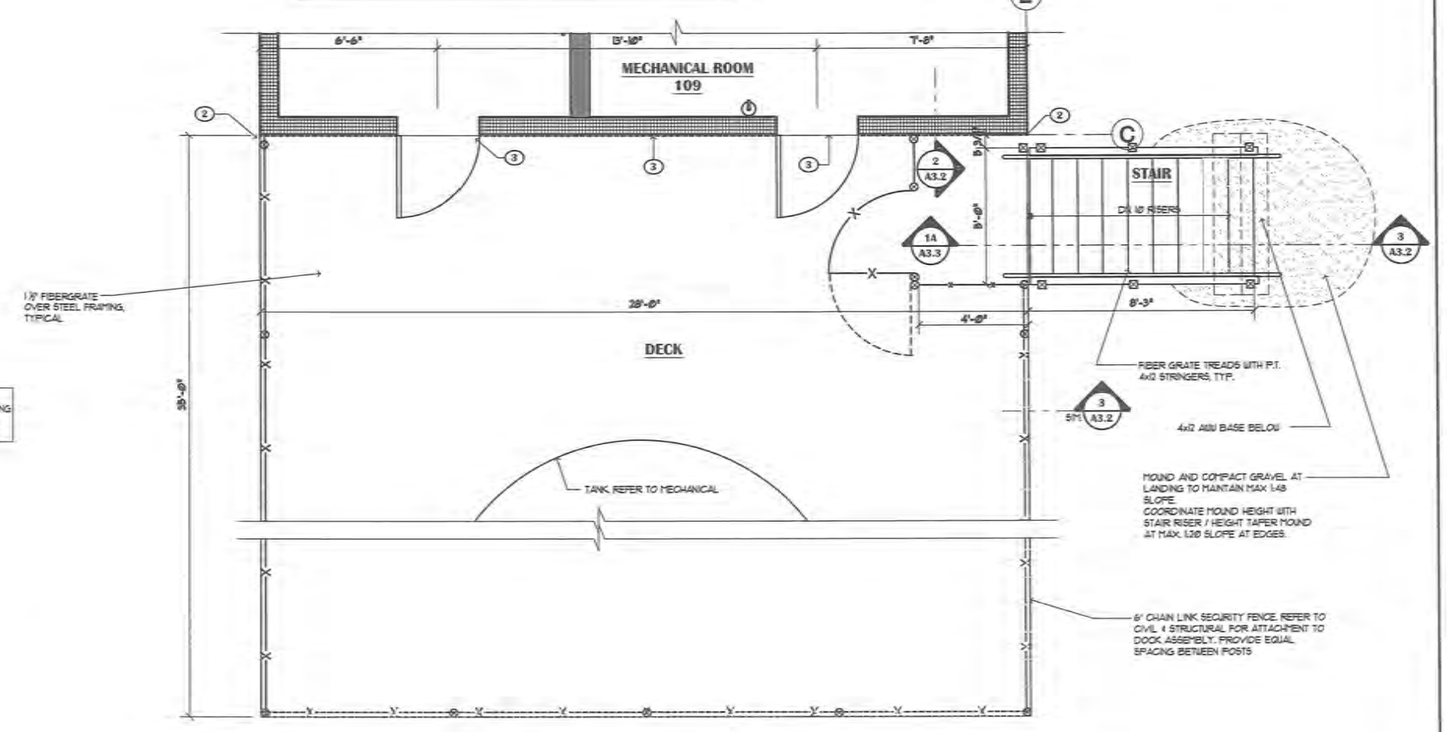

1 ENLARGED DECK/STAIR
SCALE: 3/8"=1'-0"

Revision ARCHITECTURE

SCALE: AS SHOWN

THIS DRAWING PROPERTY ORIGINAL DRAWING

IF NOT ONE INCH ON THIS SHEET, ADJUST SCALES ACCORDINGLY

CONSTRUCTION RECORD
FIELD BOOK
STAKING
FOREMAN
AS-BUILT
INSPECTOR

STATE OF ALASKA

WASHETERIA AND WATER TANK

WASHETERIA ENLARGED FLOOR PLANS

CHEFORNAK, ALASKA

CE2 ENGINEERS, INC.
PO BOX 220041 ANCHORAGE, AK 99522 PH: 907-349-1019 FAX: 907-349-1015

REVISION	BY	DATE

Project No. ____
Date August 29, 2018
Designed BT
Drawn CV
Approved BT

Sheet No. A1.2
SHEET ____ OF ____

NOTE:
REFER TO WINDOW DETAILS FOR ADDITIONAL FLASHING INFORMATION

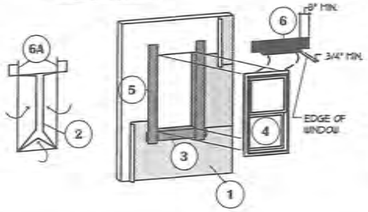

1. INSTALL AIR BARRIER IN SHINGLE LAP FASHION WITH 6" MINIMUM OVERLAP.
2. CUT AIR BARRIER AT OPENING USING MODIFIED "I-CUT" AS SHOWN, MAINTAINING A STRAIGHT CUT ACROSS TOP OF OPENING. FOLD AIR BARRIER FLAPS INTO OPENING, STAPLE EVERY 6" AND TRIM OFF EXCESS.
3. INSTALL FLEXIBLE FLASHING STRIP AT SILL TO EXTEND BEYOND JAMBS 8" MINIMUM.
4. INSTALL WINDOW PER MANUFACTURER'S RECOMMENDATIONS.
5. INSTALL FLEXIBLE FLASHING STRIPS AT JAMBS TO LAP OVER FLEXIBLE FLASHING AT SILL AND EXTEND ABOVE TOP OF OPENING 6" MIN.
6. INSTALL METAL DRIP FLASHING AT HEAD AND OVERLAP VERTICAL FLANGE WITH UPPER FLEXIBLE FLASHING STRIP.

6A. CREATE SLITS IN AIR BARRIER ABOVE WINDOW TO SLICE DRIP FLASHING AND FLEXIBLE FLASHING UNDERNEATH, THEN SEAL SLITS WITH TAPE.

4 TYPICAL WEATHER BARRIER INSTALLATION DETAIL

SCALE: 1/4"=1'-0"

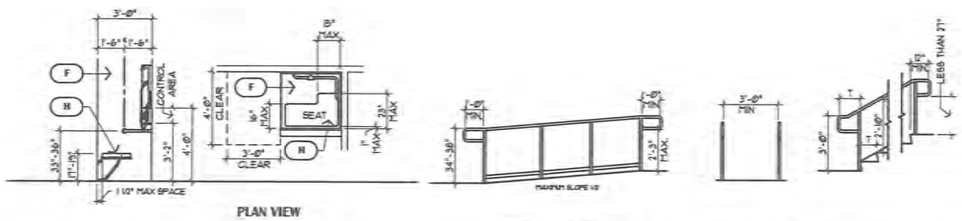

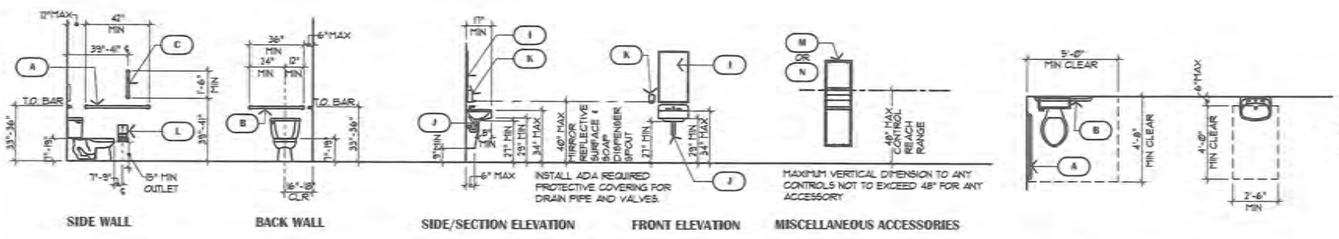

3 TYPICAL ACCESSIBLE FIXTURE & ACCESSORY MOUNTING DIMENSIONS

SCALE: 1/4"=1'-0"

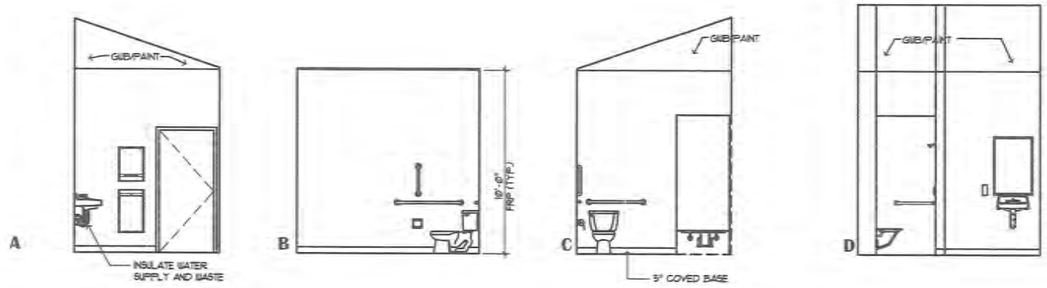

2 INTERIOR ELEVATIONS - ADA TOILET 107

REFER TO A12 FOR ACCESSORY SCHEDULE

SCALE: 1/4"=1'-0"

ROOF KEYED SHEET NOTES:

1. SNOW GUARDS

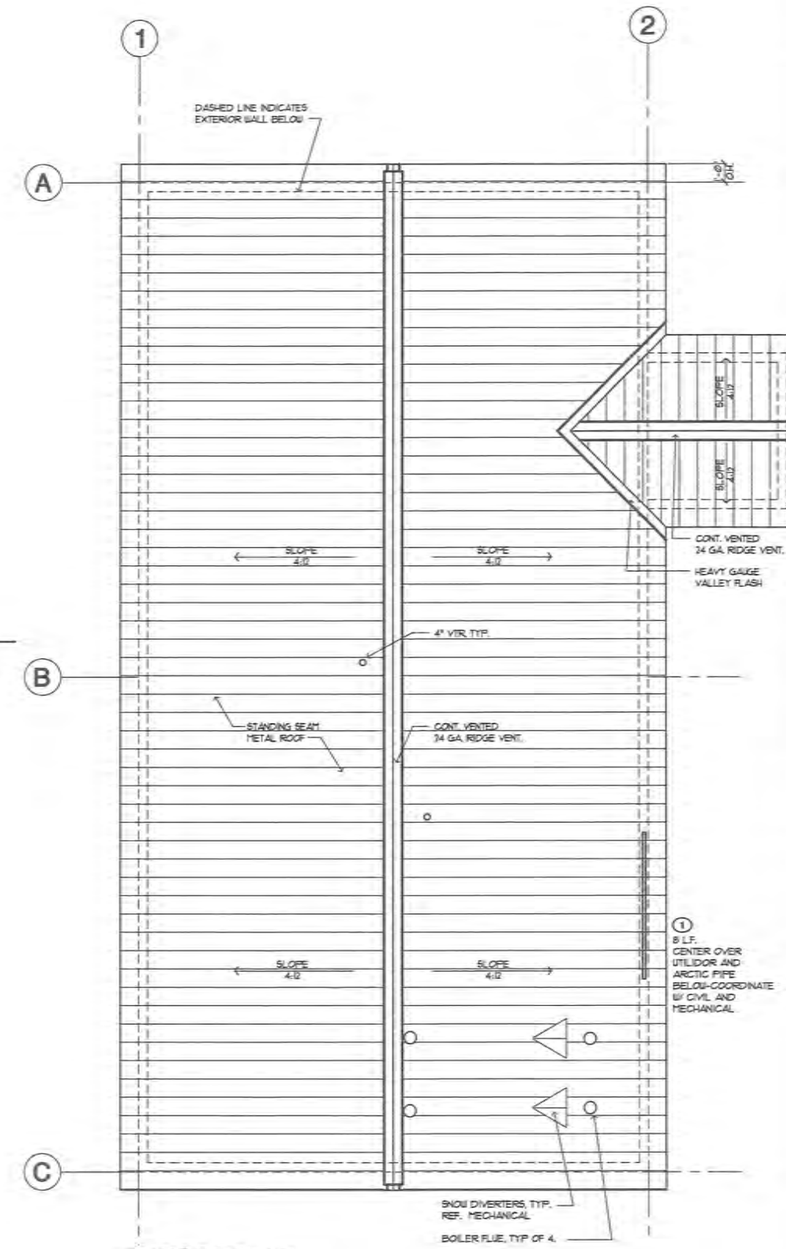

1 ROOF PLAN

SCALE: 1/4"=1'-0"

Revision ARCHITECTURE

SCALE: AS SHOWN

PRELIMINARY/INTERIM/FINAL (REVISED)

IF NOT ONE INCH ON THIS SHEET, ADJUST SCALES ACCORDINGLY

CONSTRUCTION RECORD
FIELD BOOK
STAKING
FOREMAN
AS-BUILT
INSPECTOR

STATE OF ALASKA
PRELIMINARY
NOT FOR CONSTRUCTION

WASHETERIA AND WATER TANK

ROOF PLAN
INT. ELEVATIONS
TYP. MOUNTING HTS.

CHEFORNAK, ALASKA

CE2 ENGINEERS, INC.
PO BOX 232244 ANCHORAGE, AK 99523 PH: 907-349-1015 FAX: 907-349-1015

REVISION	BY	DATE

Project No.
Date August 20, 2016
Designed BT
Drawn CV
Approved BT

Sheet No. A1.3

SHEET ___ OF ___

GENERAL SHEET NOTES

1. REFER TO CIVIL DRAWINGS FOR ALL FINAL SITE ELEVATIONS.

2. PROVIDE GALVANIZED CHAIN LINK FENCE BELOW BUILDING AND DECK. PROVIDE A 4'-0" WIDE GATE WHERE SHOWN ON ELEVATION

MATERIAL LEGEND

1. STANDING SEAM METAL ROOF
2. METAL SIDING
3. SNOW CLEATS
4. CHAIN LINK FENCE W/ TOP & BOTTOM RAIL. REF CIVIL - PROVIDE EQUAL SPACING FOR SUPPORT POSTS.
5. METAL FASCIA/SOFFIT
6. WINDOW - REF. SHEET A11
7. CONT. METAL RIDGE CAP
8. H.M. DOOR - REF. SHEET A11

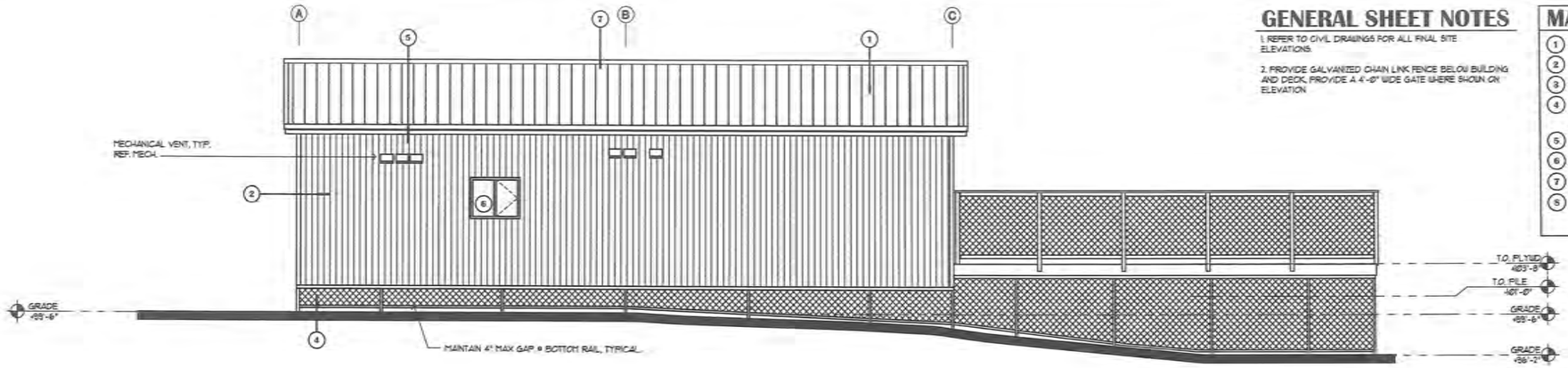

4 EXTERIOR ELEVATION

SCALE: 3/16"=1'-0"

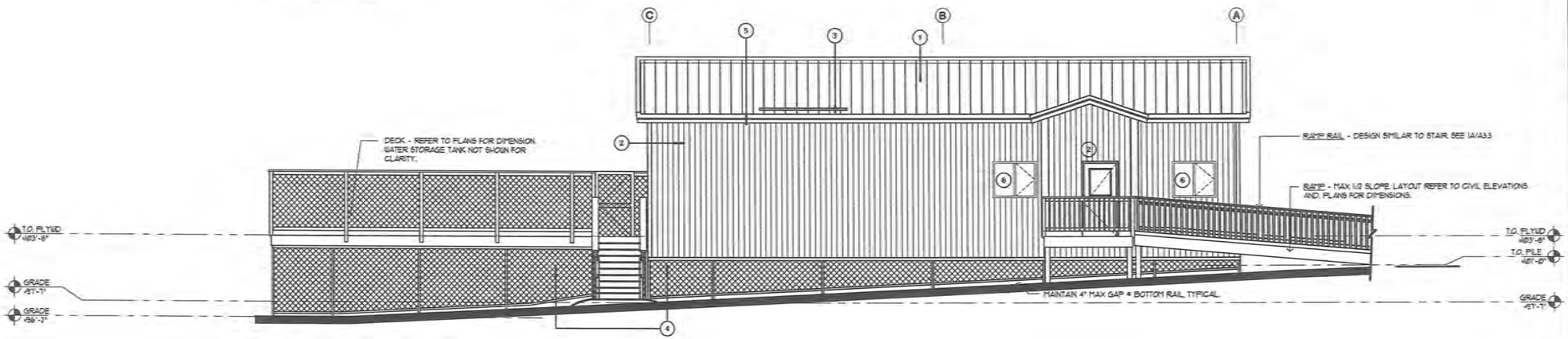

3 EXTERIOR ELEVATION

SCALE: 3/16"=1'-0"

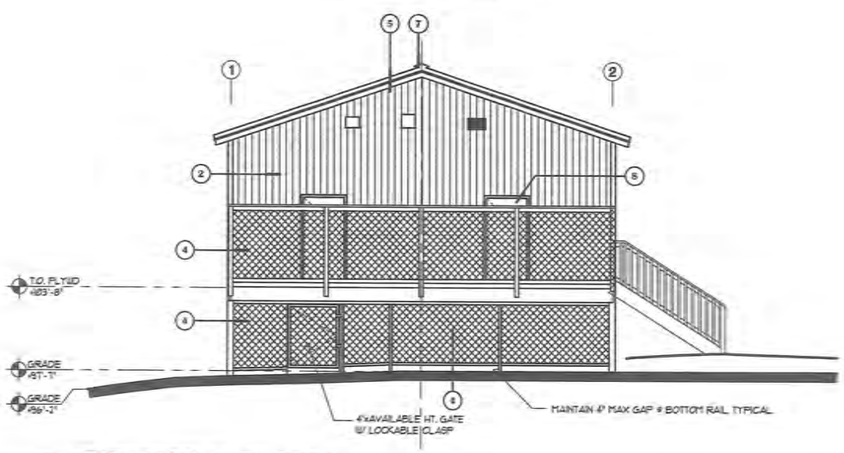

2 EXTERIOR ELEVATION

SCALE: 3/16"=1'-0"

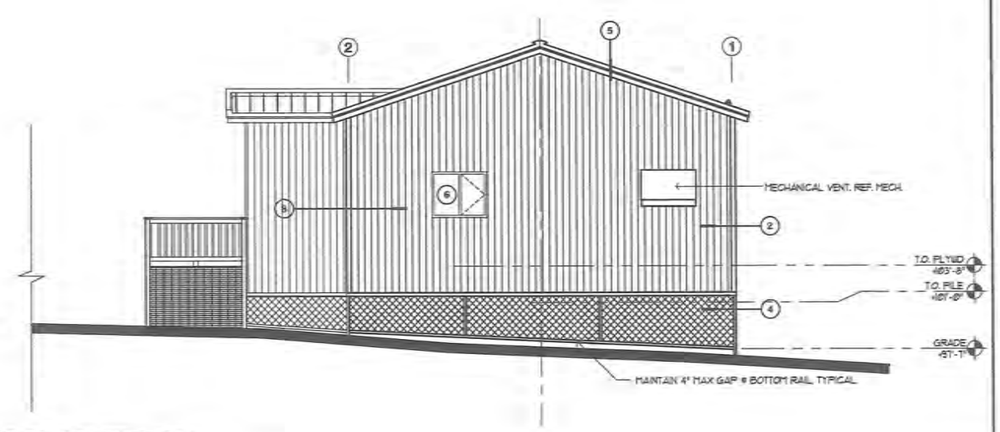

1 EXTERIOR ELEVATION

SCALE: 3/16"=1'-0"

Avision ARCHITECTURE

SCALE: AS SHOWN

WHEN DRAWING IS ORIGINAL DRAWING

IF NOT ONE INCH ON THIS SHEET, ADJUST SCALES ACCORDINGLY

CONSTRUCTION RECORD

FIELD BOOK	
STAKING	
FOREMAN	
AS-BUILT	
INSPECTOR	

STATE OF ALASKA — REGISTERED PROFESSIONAL ENGINEER — Aug 29, 2016

WASHETERIA AND WATER TANK

WASHETERIA EXTERIOR ELEVATIONS

CHEFORNAK, ALASKA

CE2 ENGINEERS, INC.
PO BOX 232946 ANCHORAGE, AK 99523 PH: 907-349-1010 FAX: 907-349-1015

REVISION	BY	DATE

Project No.

Date August 29, 2016

Designed BT

Drawn CV

Approved BT

Sheet No. A2.1

SHEET ____ OF ____

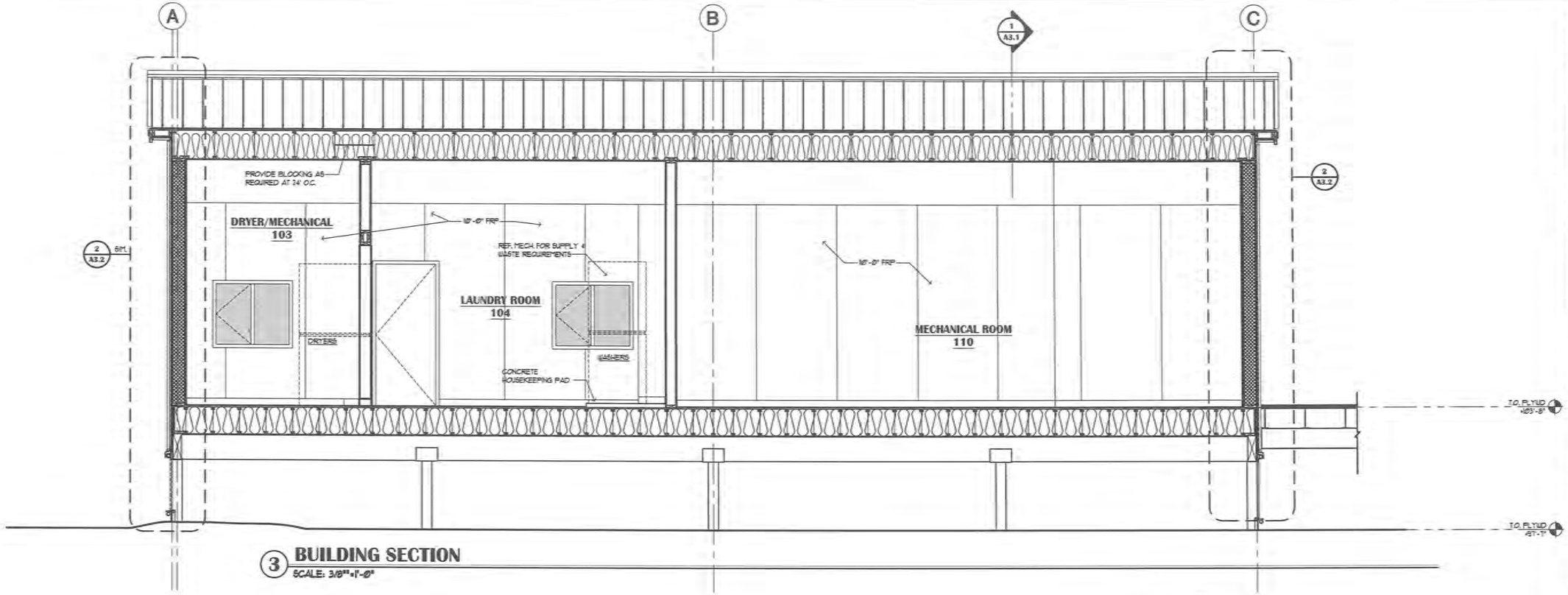

3 BUILDING SECTION
SCALE: 3/8"=1'-0"

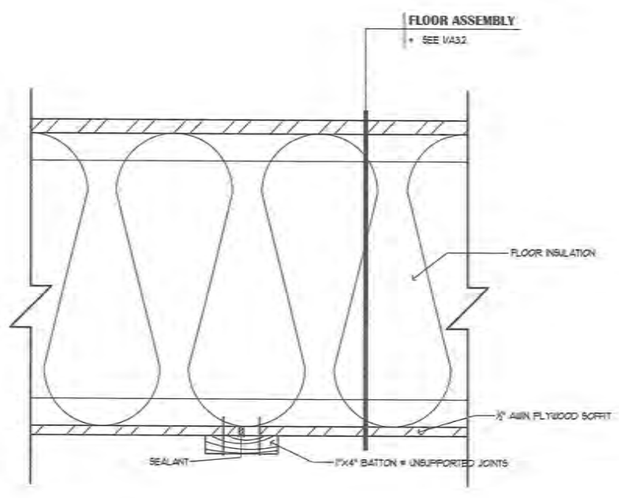

2 PANEL SPLICE DETAIL
SCALE: 3"=1'-0"

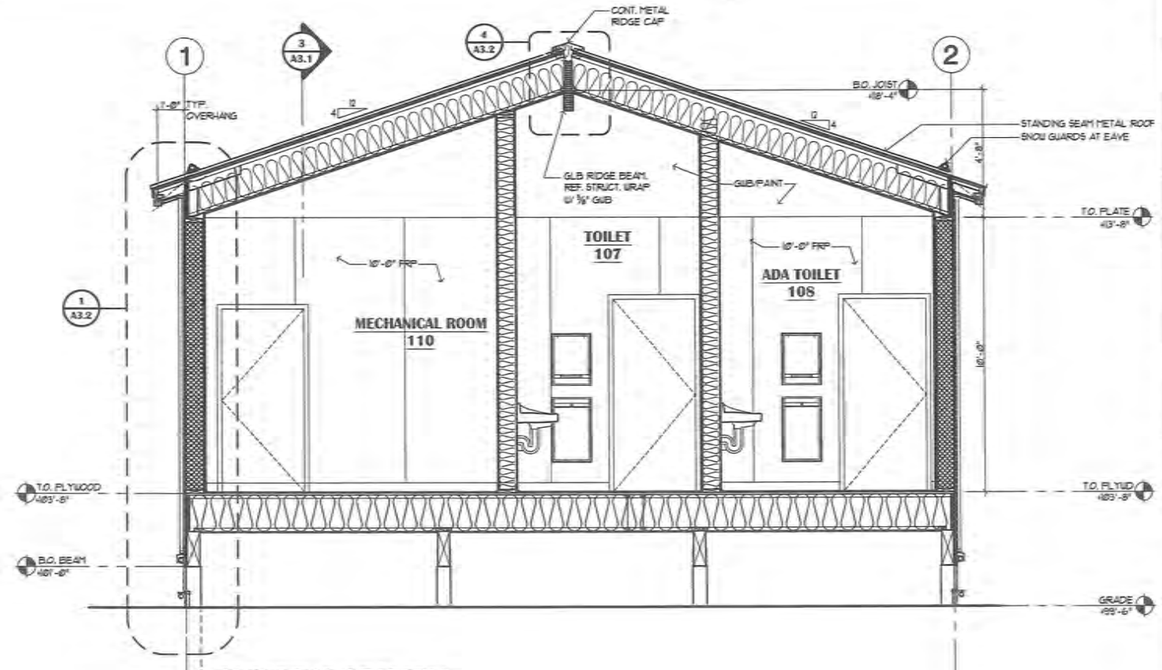

1 BUILDING SECTION
SCALE: 3/8"=1'-0"

Advision ARCHITECTURE

SCALE: AS SHOWN

CONSTRUCTION RECORD
FIELD BOOK
STAKING
FOREMAN
AS-BUILT
INSPECTOR

STATE OF ALASKA
REGISTERED PROFESSIONAL ENGINEER

WASHETERIA AND WATER TANK

WASHETERIA BUILDING SECTIONS

CHEFORNAK, ALASKA

CE2 ENGINEERS, INC.
PO BOX 232946 ANCHORAGE, AK 99523 PH: 907-349-1010 FAX: 907-349-1015

REVISION	BY	DATE

Project No.
Date August 29, 2016
Designed BT
Drawn CV
Approved BT

Sheet No. A3.1
SHEET ___ OF ___

General Sheet Notes:

1. METAL ROOFING AND SIDING. ALL METAL PRODUCTS TO BE FACTORY FINISH CONTRACTOR TO PROVIDE MANUFACTURER'S RECOMMENDED CLOSURE STRIPS, JOINT MASTIC, C-METAL AND FINISH FLASHING AT ALL EXTERIOR METAL SIDING, ROOF AND SOFFIT TERMINATIONS. PROVIDE SEALANT @ FLASHING AND SOFFIT PANELS - REF. TO MFR. STANDARD INSTALLATION GUIDES.
2. ALL VAPOR RETARDER JOINTS AND ENDS ARE TO BE TAPED - 4" MIN. OVERLAP
3. ALL WEATHER BARRIER JOINTS AND ENDS ARE TO BE TAPED - 4" MIN OVERLAP.
4. ALL FLASHING TO BE FACTORY FINISH 24 GAUGE U.N.O.
5. ALL NOTES ARE TO BE CONSIDERED TYPICAL U.N.O.
6. ALL GUB TO BE TYPE "X" UNLESS NOTED OTHERWISE.
7. WRAP ALL WINDOW AND DOOR ROUGH OPENINGS W/ BITUTHANE. PROVIDE OVERLAP W/ VAPOR RETARDER AND INFILTRATION BARRIER.
8. ALL EXPOSED EXTERIOR WOOD TO BE ALL WEATHER WOOD (AWW) TREATED PER SPECIFICATION.

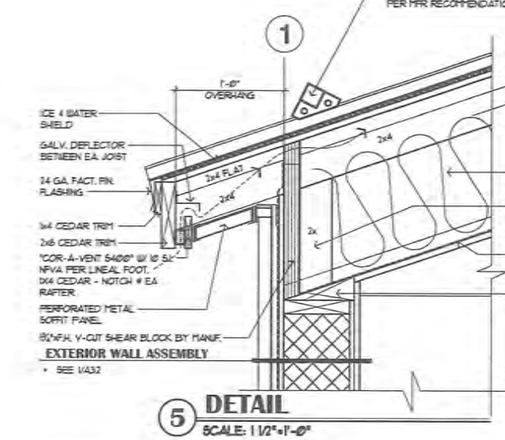

5 DETAIL
SCALE: 1 1/2"=1'-0"

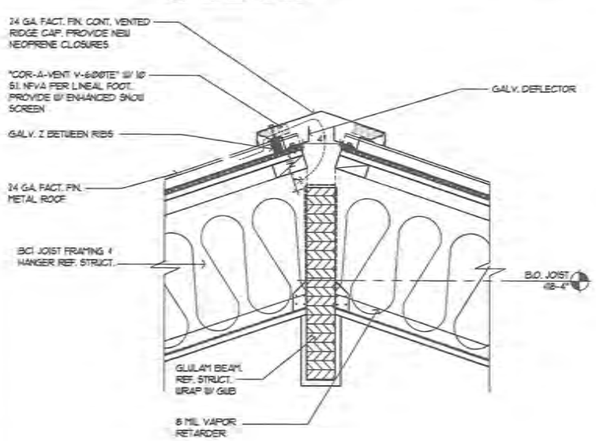

4 DETAIL
SCALE: 1 1/2"=1'-0"

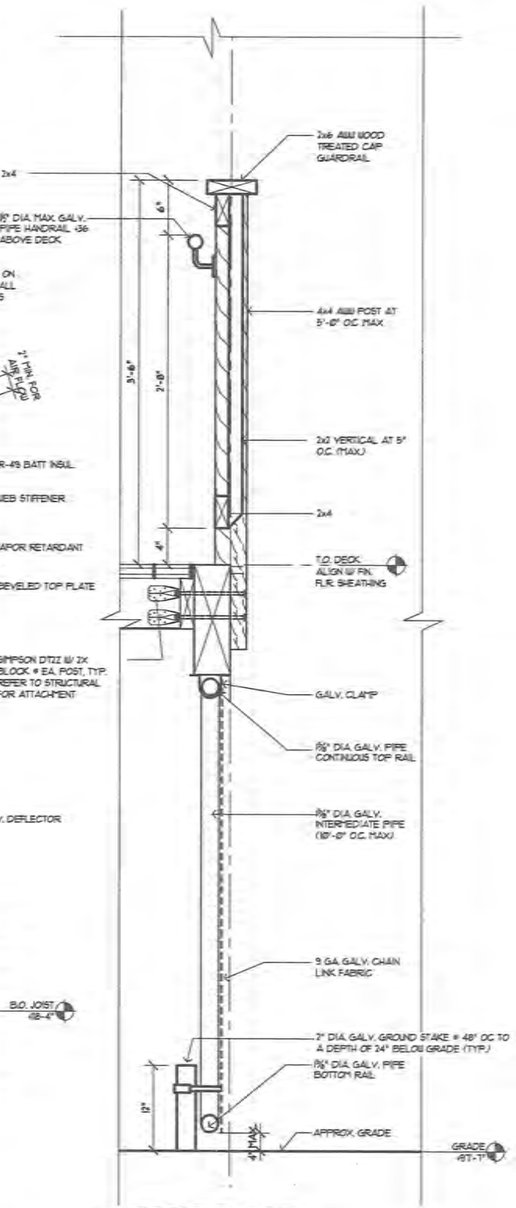

3 STAIR DETAIL
SCALE: 1 1/2"=1'-0"

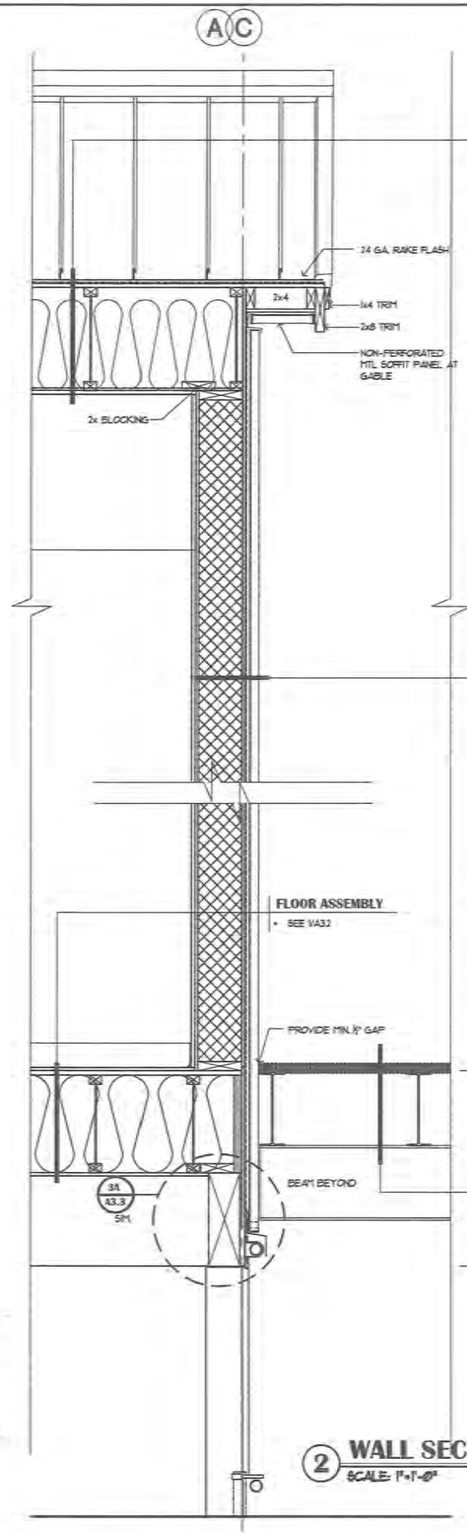

2 WALL SECTION
SCALE: 1"=1'-0"

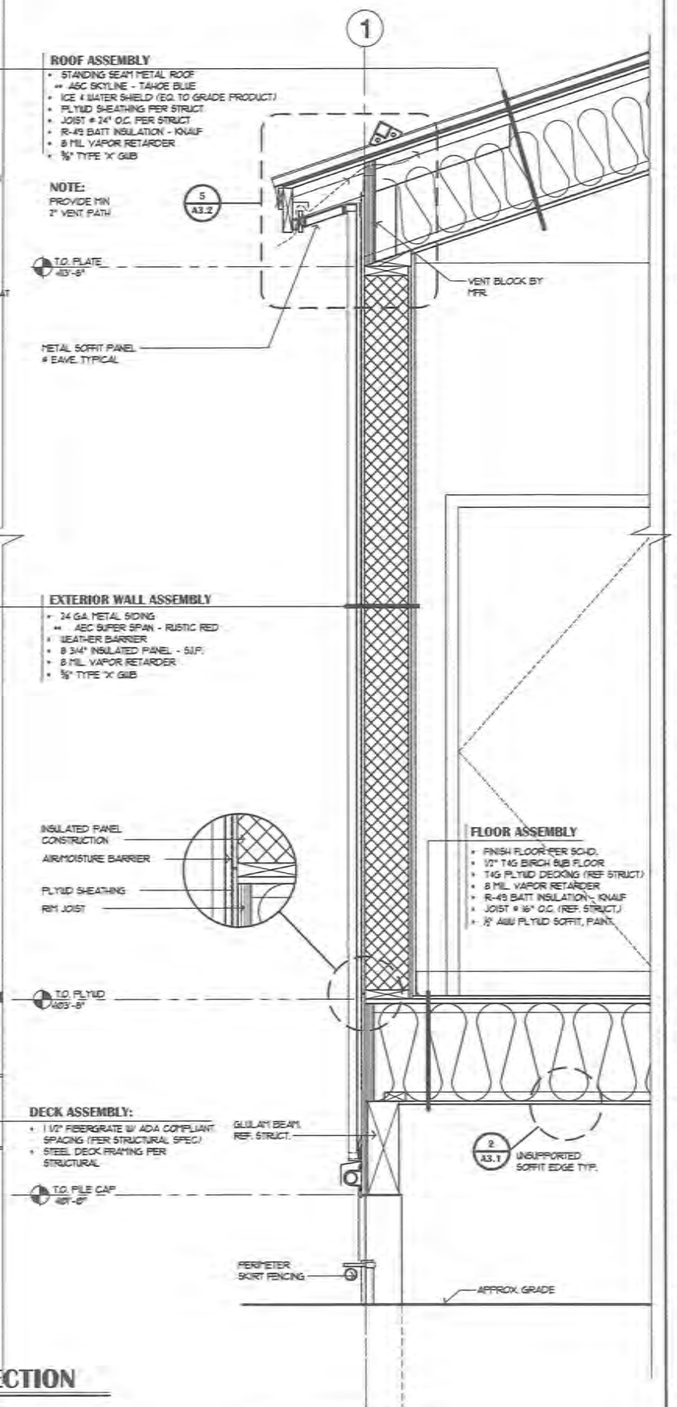

1 WALL SECTION
SCALE: 1"=1'-0"

Division ARCHITECTURE

SCALE: AS SHOWN

ARE FOR THE PROJECT ORIGINALLY TITLED. DO NOT USE THEM ON OTHER PROJECTS WITHOUT WRITTEN PERMISSION.

CONSTRUCTION RECORD
FIELD BOOK
STAKING
FOREMAN
AS-BUILT
INSPECTOR

STATE OF ALASKA

WASHETERIA AND WATER TANK
WASHETERIA WALL SECTIONS
CHEFORNAK, ALASKA

CE2 ENGINEERS, INC.
PO BOX 232948 ANCHORAGE, AK 99523 PH: 907-349-1970 FAX: 907-349-1915

REVISION	BY	DATE

Project No. ____
Date August 29, 2016
Designed BT
Drawn CV
Approved BT

Sheet No. A3.2
SHEET ____ OF ____

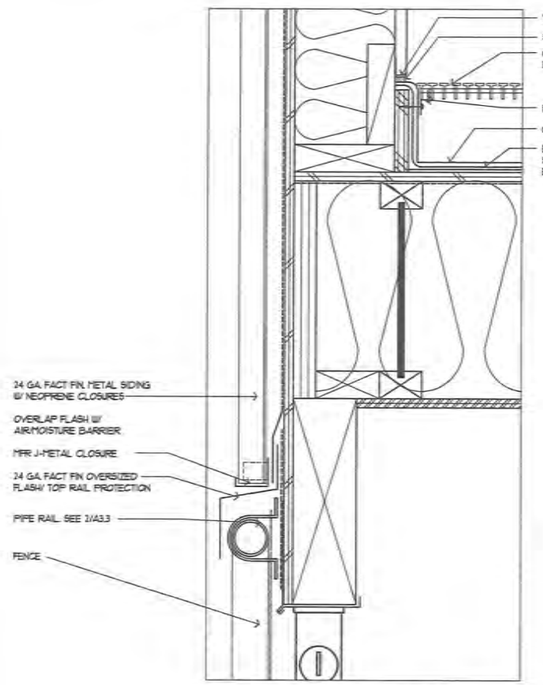

3A ENLARGED DETAIL
SCALE: 3"=1'-0"

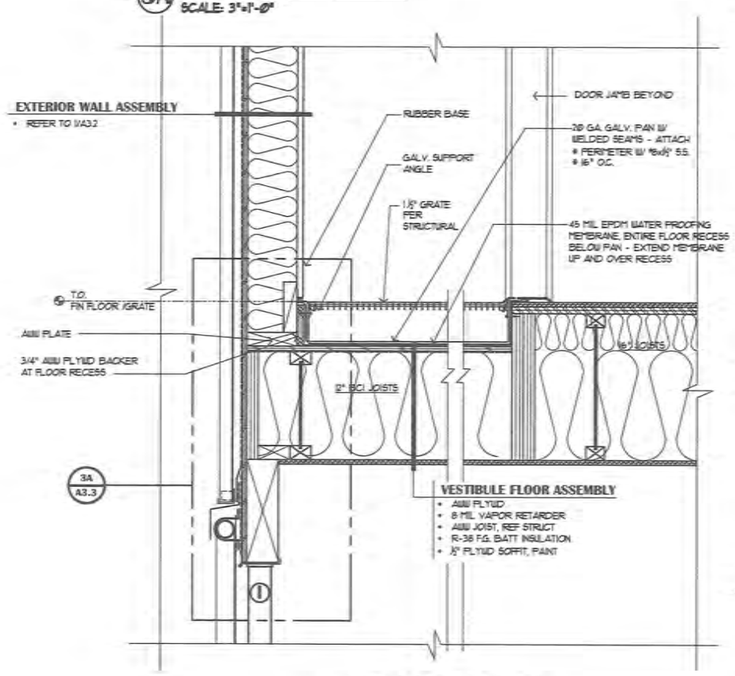

3 FLOOR DETAIL
SCALE: 1 1/2"=1'-0"

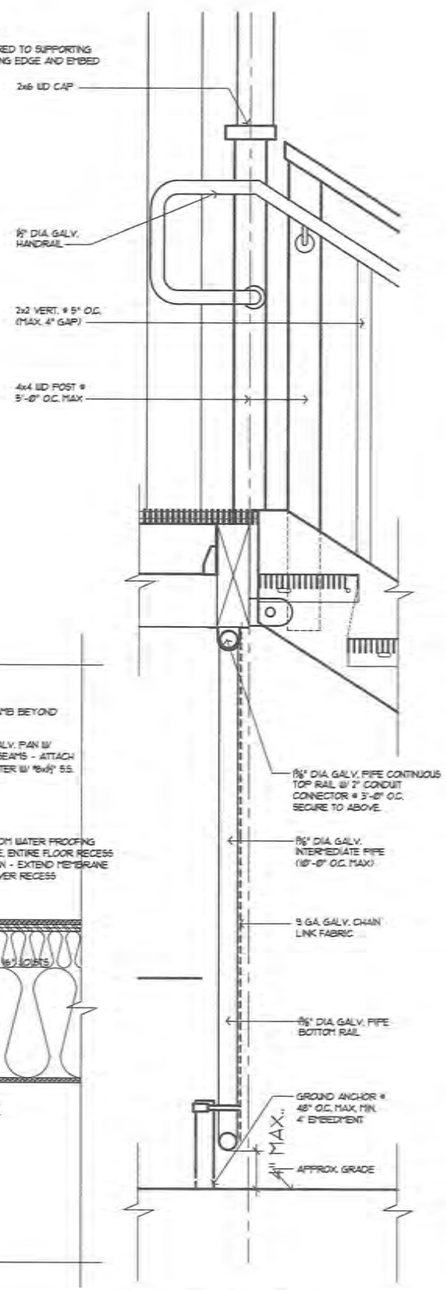

2 STAIR DETAIL
SCALE: 1 1/2"=1'-0"

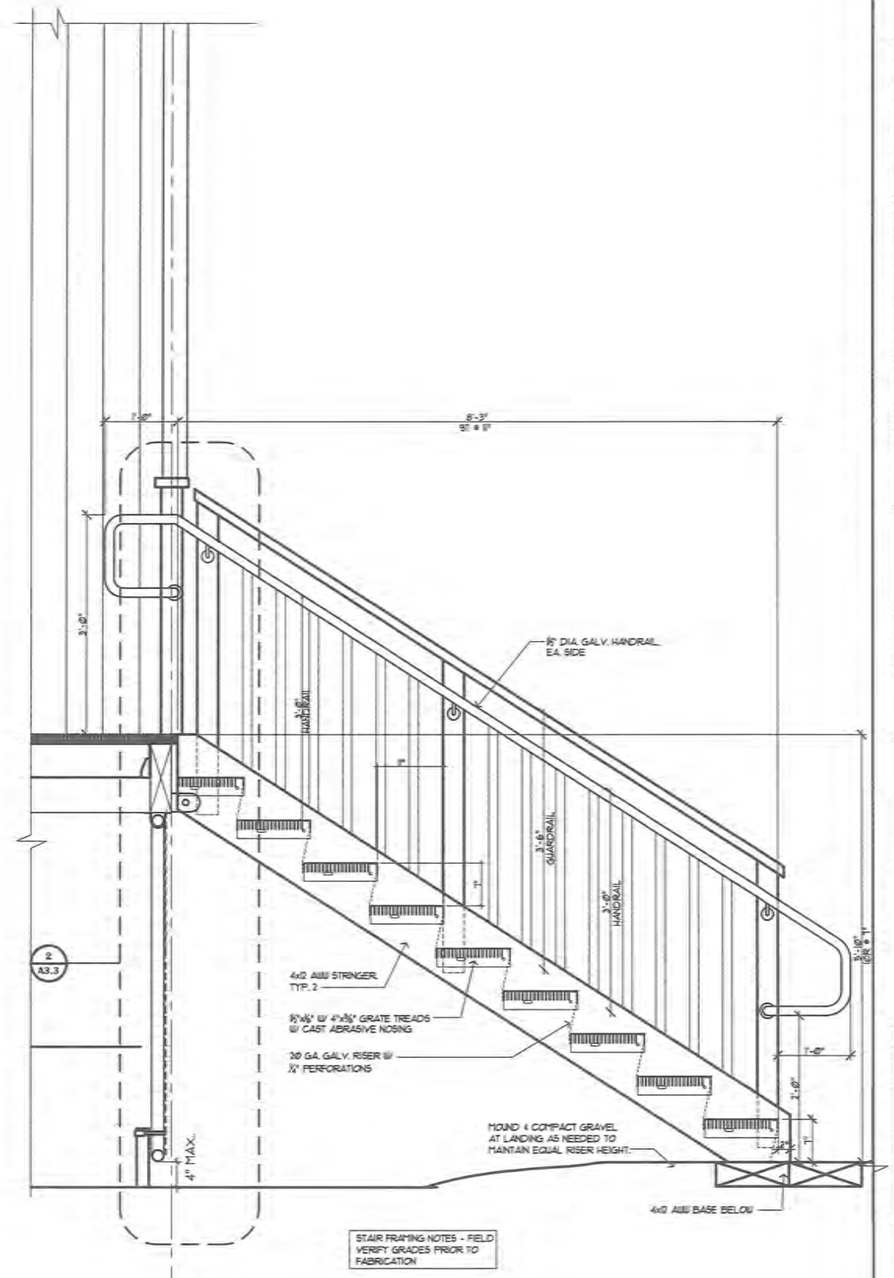

1A WALL SECTION
SCALE: 1"=1'-0"

Envision ARCHITECTURE

SCALE: AS SHOWN

MAS BIDING ACTION ORIGINAL DRAWING

0 1"

IF NOT ONE INCH ON THIS BLOCK, ADJUST SCALES ACCORDINGLY

CONSTRUCTION RECORD
FIELD BOOK
STAKING
FOREMAN
AS-BUILT
INSPECTOR

STATE OF ALASKA

WASHETERIA AND WATER TANK

WASHETERIA WALL SECTIONS

CHEFORNAK, ALASKA

CE2 ENGINEERS, INC.
PO BOX 230246 ANCHORAGE, AK 99523 PH: 907-349-9119 FAX: 907-349-1015

REVISION	BY	DATE

Project No: ____
Date August 29, 2016
Designed BT
Drawn CV
Approved BT

Sheet No. A3.3
SHEET ____ OF ____

STRUCTURAL NOTES

THE CONTRACTOR SHALL VERIFY AND COORDINATE ALL DIMENSIONS AMONG THE DRAWINGS BEFORE STARTING ANY WORK OR FABRICATION. ANY DISCREPANCIES FOUND AMONG THE DRAWINGS, SITE CONDITIONS, SPECIFICATIONS AND THESE NOTES SHALL BE REPORTED TO THE ARCHITECT/ ENGINEER AT ONCE.

ALL CONSTRUCTION SHALL COMPLY WITH THE 2006 INTERNATIONAL BUILDING CODE (IBC) AS AMENDED BY THE LOCAL BUILDING OFFICIAL.

SAFETY - THE CONTRACTOR IS RESPONSIBLE FOR MEETING ALL OSHA AND DOSH SAFETY STANDARDS. THE CONTRACTOR IS IN CHARGE OF ALL SAFETY MATTERS ON AND AROUND THE JOB SITE. PROVIDE TEMPORARY ERECTION BRACING AND SHORING AS REQUIRED FOR STABILITY OF THE STRUCTURE DURING ALL PHASES OF CONSTRUCTION.

CODE
2009 INTERNATIONAL BUILDING CODE (IBC)

DESIGN LIVE LOADS

FLOOR LOADS - SEE DESIGN LOAD SCHEDULE THIS SHEET
MINIMUM ROOF LIVE LOAD = 20 PSF

SNOW

GROUND SNOW LOAD = 50 PSF
ROOF SNOW LOAD = 40 PSF
SNOW EXPOSURE FACTOR, C_e = 0.90
SNOW LOAD IMPORTANCE FACTOR = 1.0
THERMAL FACTOR, C_t = 1.0

WIND DESIGN DATA

VELOCITY = 130 MPH HOUR 3 SECOND GUST
IMPORTANCE FACTOR, I_w = 1.0
EXPOSURE C
INTERNAL PRESSURE COEFFICIENT, GC_{pi} = ± 0.18
COMPONENTS AND CLADDING PRESSURES,
ROOF
ZONE 3 - WITHIN 8' OF CORNERS = 92.3 PSF
ZONE 2 - WITHIN 8' OF EAVE AND PEAK = 62.4 PSF
ZONE 1 - EVERYWHERE ELSE = 36.0 PSF
WALLS
ZONE 5 - WITHIN 8' OF VERTICAL CORNERS = 52.5 PSF
ZONE 4 - EVERYWHERE ELSE = 42.6 PSF

SEISMIC DESIGN DATA

I_e = 1.0
S_s = .108g, S_1 = 0.06g, S_{DS} = .116, S_{D1} = 0.09
SITE CLASS D
SEISMIC DESIGN CATEGORY D
SEISMIC RESISTING SYSTEM = BEARING WALL, PLYWOOD SHEARWALLS, R = 6.5
SEISMIC BASE SHEAR = V_s= 1.0 KIPS C_s = 0.018
EQUIVALENT LATERAL FORCE PROCEDURE

OCCUPANCY CATEGORY II

FOUNDATION DESIGN

FOUNDATION DESIGN IS BASED ON DRIVEN PILE WITH A MINIMUM CAPACITY OF 40 KIPS FOR GRAVITY AND 3 KIPS FOR LATERAL LOAD. PILING FOR THE MAIN BUILDING ARE COMPLETED.

EXTERIOR PILE FOR THE STAIRS, RAMP AND PARKING AREA ARE LIGHTLY LOADED.

SPECIAL INSPECTIONS/QUALITY ASSURANCE PROGRAM

100% VISUAL INSPECTION IS REQUIRED FOR ALL WELDS, PERIODIC.

WOOD PRODUCTS

ALL LUMBER SHALL BE A MINIMUM OF HF#2 FOR ALL BRIDGING, BLOCKING AND FRAMING REQUIRED. MINIMUM FASTENING TO BE PER IBC TABLE 2304.9.1 UNLESS SPECIFICALLY NOTED IN THESE DRAWINGS. PROVIDE POSITIVE CONNECTION UTILIZING SIMPSON HANGERS OR FRAMED BEAM POCKETS TO RESIST VERTICAL AND LATERAL LOADING AT ALL POST CAPS AND BASES, BEARING WALLS.

WOOD I- JOISTS - PROVIDE WOOD I JOISTS AS MANUFACTURED BY BOISE CASCADE, TRUSS JOIST, ROSEBURG OR EQUAL. PROVIDE FULL DEPTH SOLID BLOCKING AT ALL SUPPORTS. COORDINATE ALL HANGERS WITH ACTUAL JOIST SIZE. SUBMIT CONTRACTOR CHECKED ENGINEER SHOP DRAWINGS STAMPED BY AN ALASKAN LICENSED PROFESSIONAL ENGINEER PRIOR TO FABRICATION AND INSTALLATION.

FLOOR SHEATHING - USE APA RATED SHEATHING, TONGUE AND GROOVE PLYWOOD, USE 48 SPAN RATING.

GLU LAM BEAMS SHALL BE 24F DF/HF WITH Fb=2,400 psi. USE V4 FOR SIMPLE SPANS AND V8 FOR CANTILEVERS OR BEAMS CONTINUOUS OVER SUPPORTS.

ROOF SHEATHING: USE APA RATED PLYWOOD SHEATHING. UPPER ROOF SHEATHING WITH SUPPORTS @ 24" O.C. USE MINIMUM 3/4" SHEATHING WITH A 24/16 SPAN RATING.

WALL SHEATHING: USE APA RATED SHEATHING. PROTECT SHEATHING FROM THE WEATHER UNLESS IT IS RATED FOR EXTERIOR EXPOSURE. PROVIDE FRAMING OR BLOCKING BEHIND ALL PANEL EDGES. PROVIDE MINIMUM ⅜" FROM EDGE TO CENTER OF NAIL. DRIVE NAILS FLUSH, DO NOT OVERDRIVE FASTENERS. PROVIDE FASTENERS PER SHEARWALL SCHEDULE.

ALL WOOD IN CONTACT WITH CONCRETE OR EXPOSED TO THE WEATHER SHALL BE PRESERVATIVE TREATED IN ACCORDANCE WITH AMERICAN WOOD PRESERVATIVE ASSOCIATION. PROVIDE PRESSURE TREATED FOUNDATION SILL PLATES, PROVIDE 3X3X.229" MIN. PLATE WASHERS FOR FOUNDATION ANCHOR BOLTS.

SIP PANELS

SIP PANELS SHALL BE PREMIER OR R-CONTROL PANELS WITH A MINIMUM RACKING SHEAR OF 268 PLF, AND ABLE TO SUPPORT A 685 PLF TOTAL AXIAL LOAD IN COMBINATION WITH A 30 PSF OUT OF PLAN WIND LOAD.

FASTEN SIP PANELS FOR THE INDICATED LOADINGS PER THE MFG APPROVED SHOP DRAWINGS.

ABBREVIATIONS

EW. - EACH WAY
IBC - INTERNATIONAL BUILDING CODE
I.S. - INSIDE
O.S. - OUTSIDE
F.O.S. - FACE OF STUD
HDG - HOT DIP GALVANIZED
MFG - MANUFACTURER
FFA - POST FROM ABOVE
SIM. - SIMILAR TO
SIP - STRUCTURAL INSULATED PANELS
TYP. - TYPICAL
UNO - UNLESS NOTED OTHERWISE
W.T.E. - WITH THE EXCEPTION
WWM - WELDED WIRE MESH

DESIGN LOAD SCHEDULE

	DESCRIPTION	SUPERIMPOSED DEAD LOAD (PSF)	LIVE LOAD (PSF)
1	ROOF BALANCED SNOW LOAD	15	40
2	FLOOR LOAD THROUGHOUT	10	100

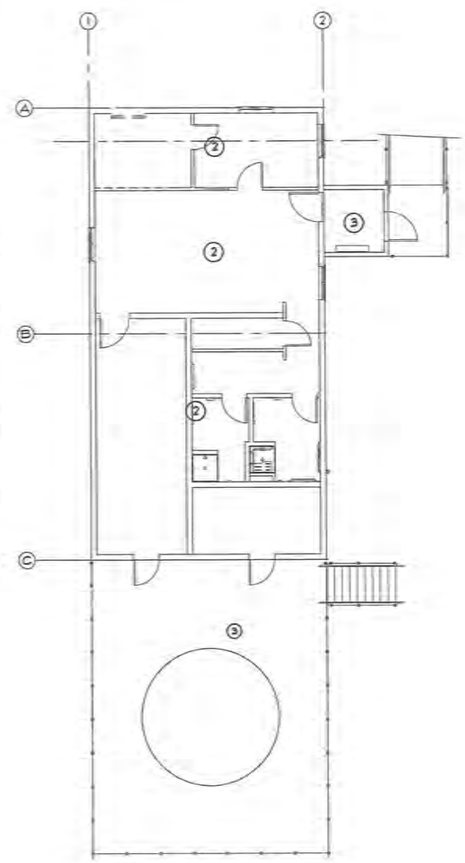

1 S0.1 Floor Design Load
Scale: 1/8" = 1'-0"

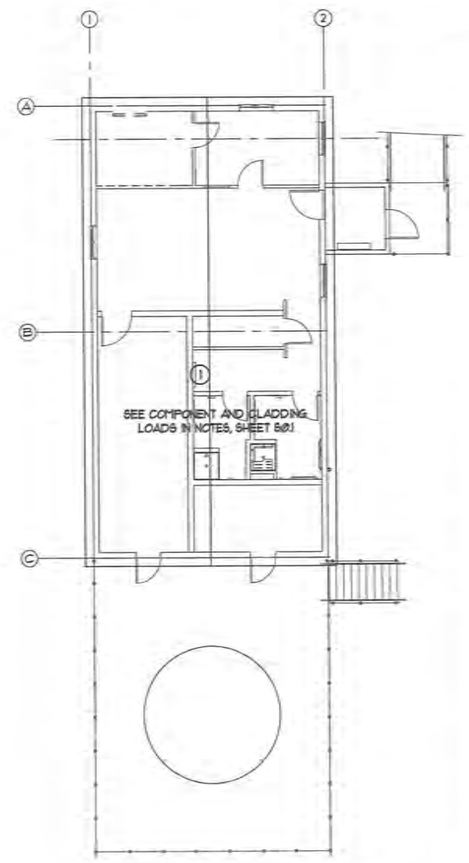

2 S0.1 Roof Design Load
Scale: 1/8" = 1'-0"

99% DOCUMENTS

Olen Associates, Inc.
Construction Management Engineering Inspections
Phone: (907) 694-6961
Fax: (907) 694-6965
email: bobm@gci.net
10402 Jensen Drive
Eagle River, AK 99577

SCALE: AS SHOWN

BAR IS ONE INCH ON ORIGINAL DRAWING 0 1"
IF NOT ONE INCH ON THIS SHEET, ADJUST SCALES ACCORDINGLY

CONSTRUCTION RECORD
FIELD ROOK
STAKING
FOREMAN
AS-BUILT
INSPECTOR

STATE OF ALASKA
BENJAMIN C. GISH
CE-4183
EXPIRES 04/30/2016
REGISTERED PROFESSIONAL ENGINEER

WASHETERIA AND WATER TANK
STRUCTURAL NOTES
CHEFORNAK, ALASKA

CE2 ENGINEERS, INC.
PO BOX 220248 ANCHORAGE, AK 99522 PH: 907-346-1010 FAX: 907-346-1011

REVISION	BY	DATE

Project No. 03098
Date 6/15/16
Designed BGD
Drawn BRJ
Approved CAL

Sheet No. S0.1
SHEET ___ OF ___

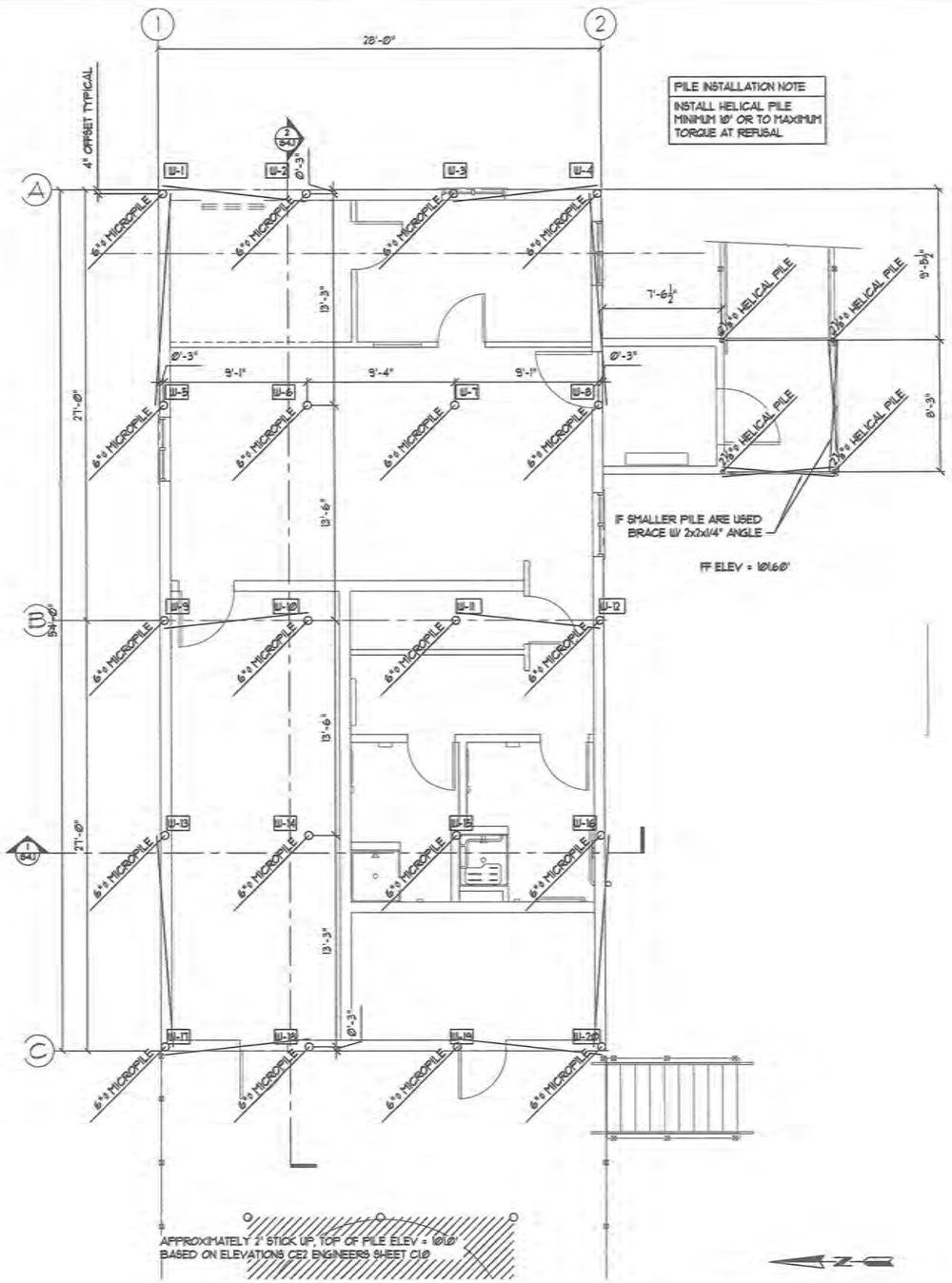

1 S1.1 Washeteria Pile Plan
Scale: 1/4" = 1'-0"

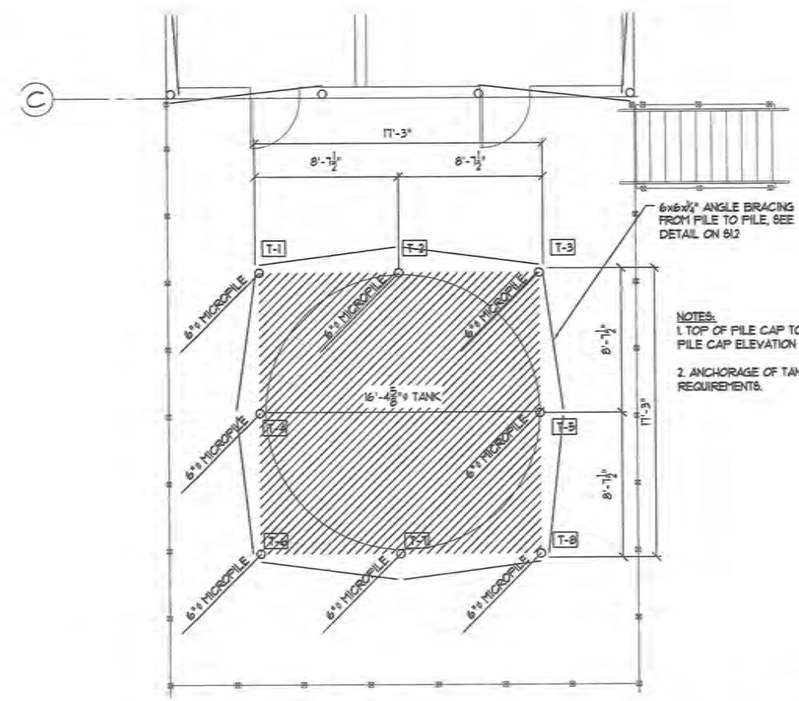

2 S1.1 Water Tank Platform Pile Plan
Scale: 1/4" = 1'-0"

95% DOCUMENTS

Olen Associates, Inc.
Construction Management Engineering Inspections
Phone: (907) 444-0001
Fax: (907) 444-0002
email: bolen@gci.net
M.R. Jensen Drive
Eagle River, AK 99577

SCALE: AS SHOWN

MAY ALTER NOTICE ORIGINAL DRAWING

IF NOT ONE INCH ON THIS SHEET, SCALE ACCORDINGLY

CONSTRUCTION RECORD
FIELD BOOK
STAKING
FOREMAN
AS-BUILT
INSPECTOR

STATE OF ALASKA
ROBERT C. OLEN
8/19/16
REGISTERED PROFESSIONAL ENGINEER

WASHETERIA AND WATER TANK
WASHETERIA FOUNDATION PLAN
CHEFORNAK, ALASKA

CE2 ENGINEERS, INC.
PO BOX 230968 ANCHORAGE, AK 99523 PH 907-349-9103 FAX 907-349-9115

REVISION	BY	DATE

Project No. 630938
Date 8/15/16
Designed BCO
Drawn RBJ
Approved OAL

Sheet No. S1.1
SHEET ___ OF ___

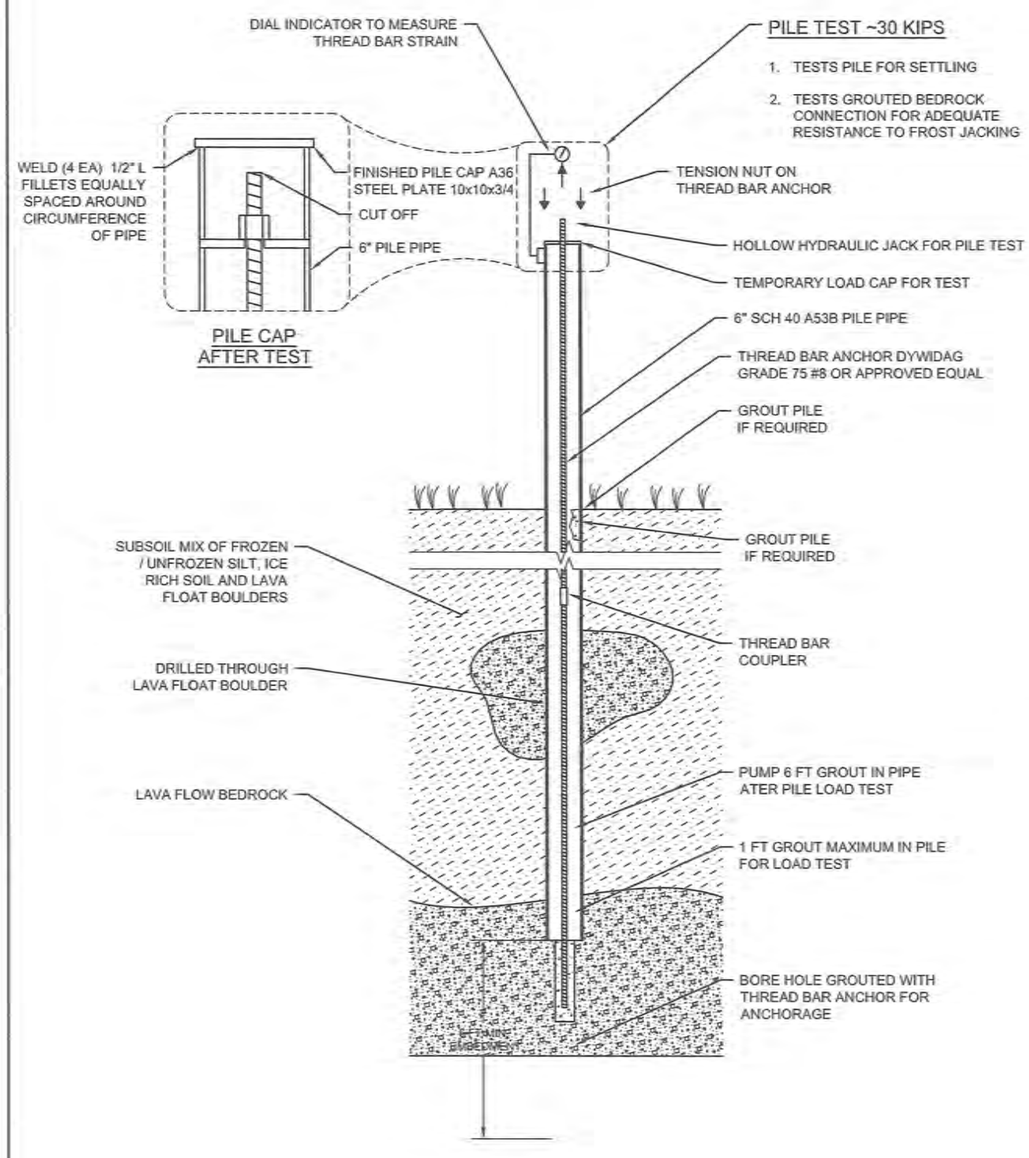

1 / S1.2 Micropile Detail
No Scale

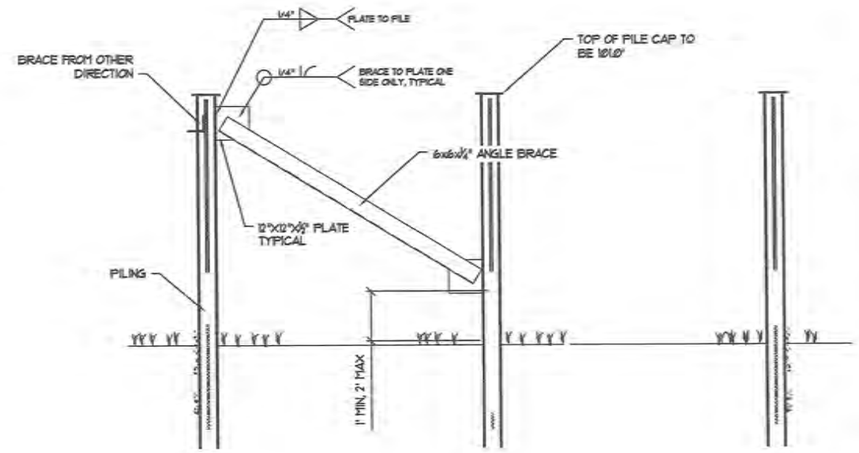

3 / S1.2 Washeteria Bracing Detail
1/4" = 1'-0"

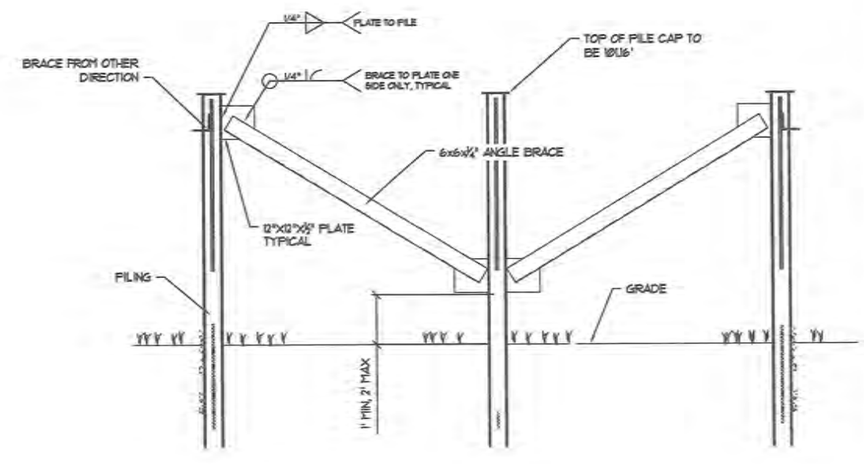

2 / S1.2 Tank Bracing Detail
1/4" = 1'-0"

99% DOCUMENTS

Olen Associates, Inc.
Construction Management Engineering Inspections
Phone: (907) 694-0001
Fax: (907) 694-0005
email: bobmc@gci.net
8400 Hinson Drive
Eagle River, AK 99577

SCALE: AS SHOWN

CONSTRUCTION RECORD
FIELD BOOK
STAKING
FOREMAN
AS-BUILT
INSPECTOR

STATE OF ALASKA
BENJAMIN C. OKH
EC-14183
REGISTERED PROFESSIONAL ENGINEER

WASHETERIA AND WATER TANK
WASHETERIA MICROPILE DETAIL
CHEFORNAK, ALASKA

CE2 ENGINEERS, INC.
PO BOX 232948 ANCHORAGE, AK 99523 PH: 907-349-3310 FAX: 907-349-3315

REVISION	BY	DATE

Project No. 63058
Date 4/15/16
Designed BCO
Drawn RBJ
Approved OAL

Sheet No. S1.2
SHEET ___ OF ___

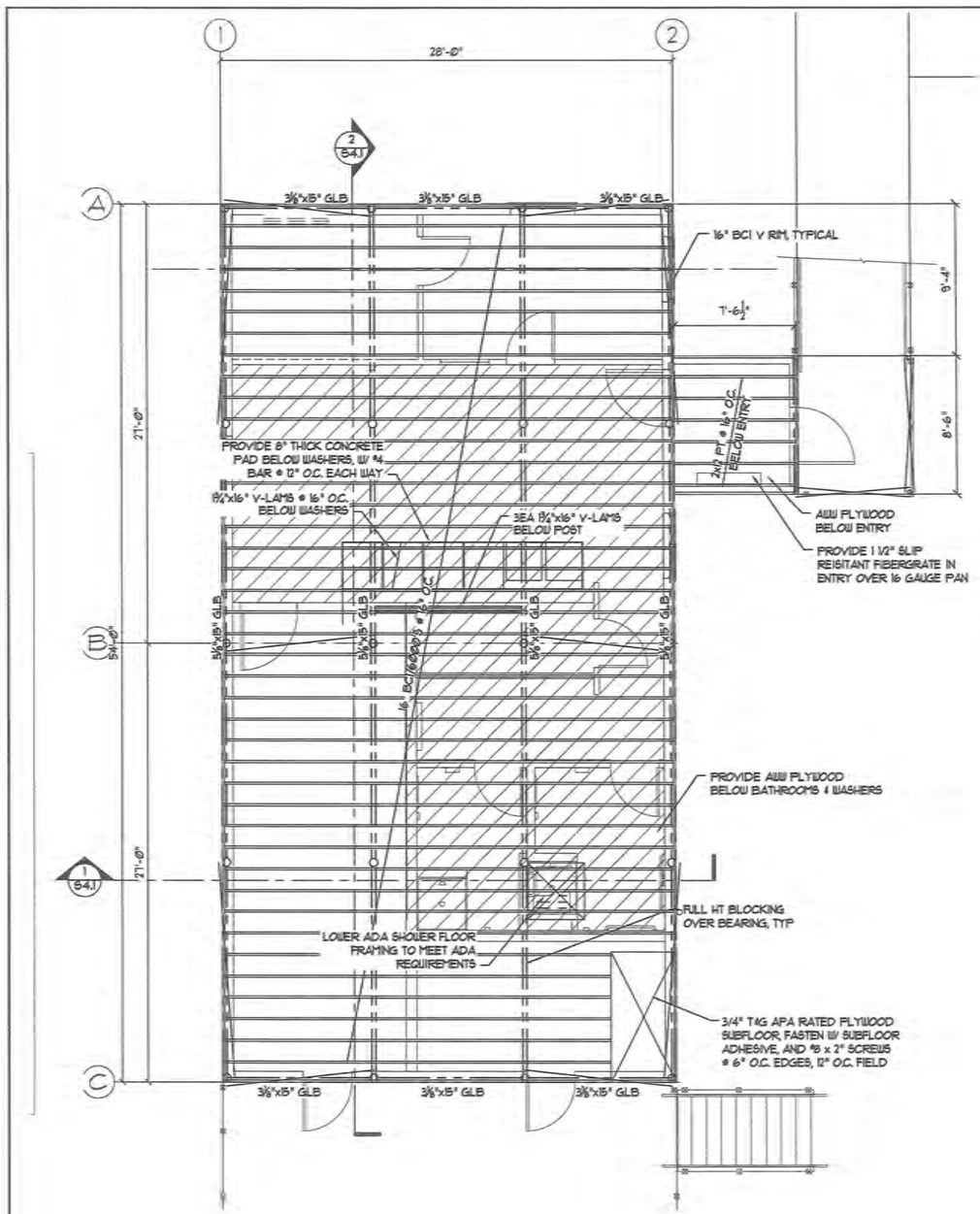

1 S2.1 Floor Framing Plan
Scale: 1/4" = 1'-0"

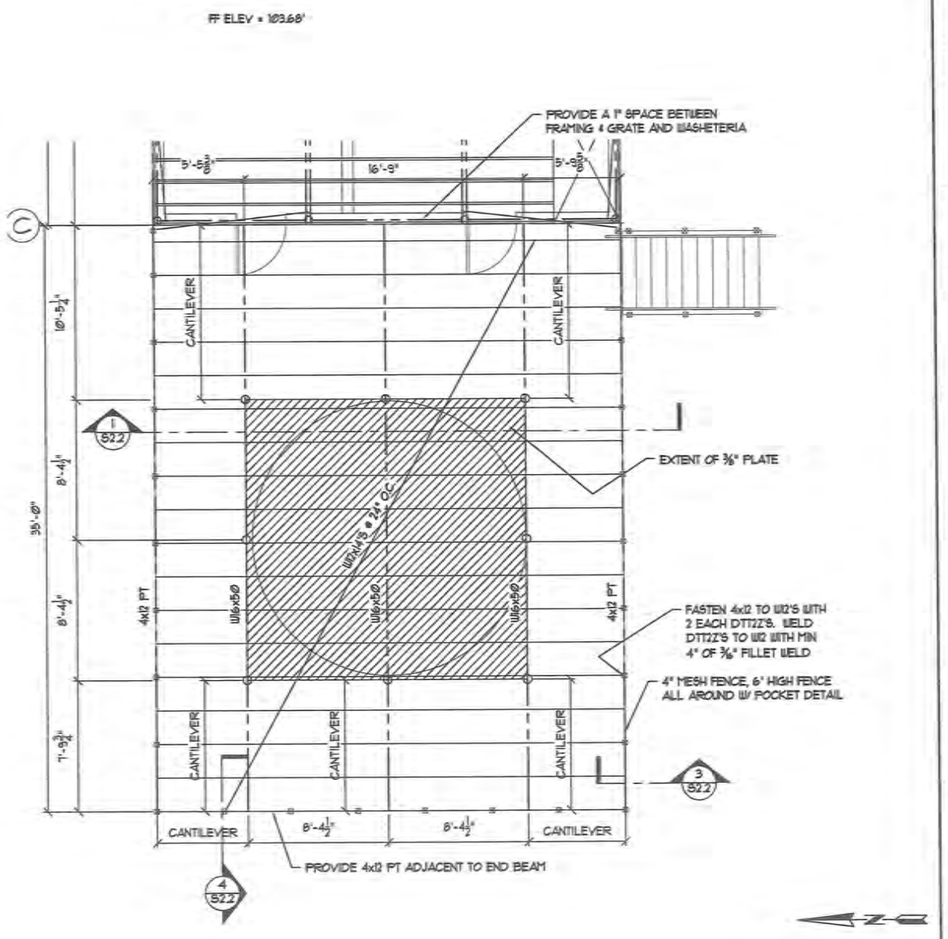

2 S2.1 Water Tank Platform Framing Plan
Scale: 1/4" = 1'-0"

99% DOCUMENTS

Olen Associates, Inc.
Construction Management Engineering Inspections
Phone: (907) 694-0501
Fax: (907) 694-0505
email: bolen@gci.net
9420 Vinson Drive
Eagle River, AK 99577

SCALE: AS SHOWN

BAR IS ONE INCH ON ORIGINAL DRAWING
0 1"
IF NOT ONE INCH ON THIS SHEET, ADJUST SCALES ACCORDINGLY

CONSTRUCTION RECORD
FIELD BOOK
STAKING
FOREMAN
AS-BUILT
INSPECTOR

STATE OF ALASKA
BOLAND C. OLEN
CE-14183
EXPIRES 4/30/10
REGISTERED PROFESSIONAL ENGINEER

WASHETERIA AND WATER TANK
WASHETERIA
FLOOR FRAMING PLAN
CHEFORNAK, ALASKA

CE2 ENGINEERS, INC.
PO BOX 223096 ANCHORAGE, AK 99503 PH 907-349-1019 FAX 907-349-1015

REVISION	BY	DATE

Project No. 620/08
Date 8/15/10
Designed BCO
Drawn RBJ
Approved OAL

Sheet No. S2.1
SHEET ____ OF ____

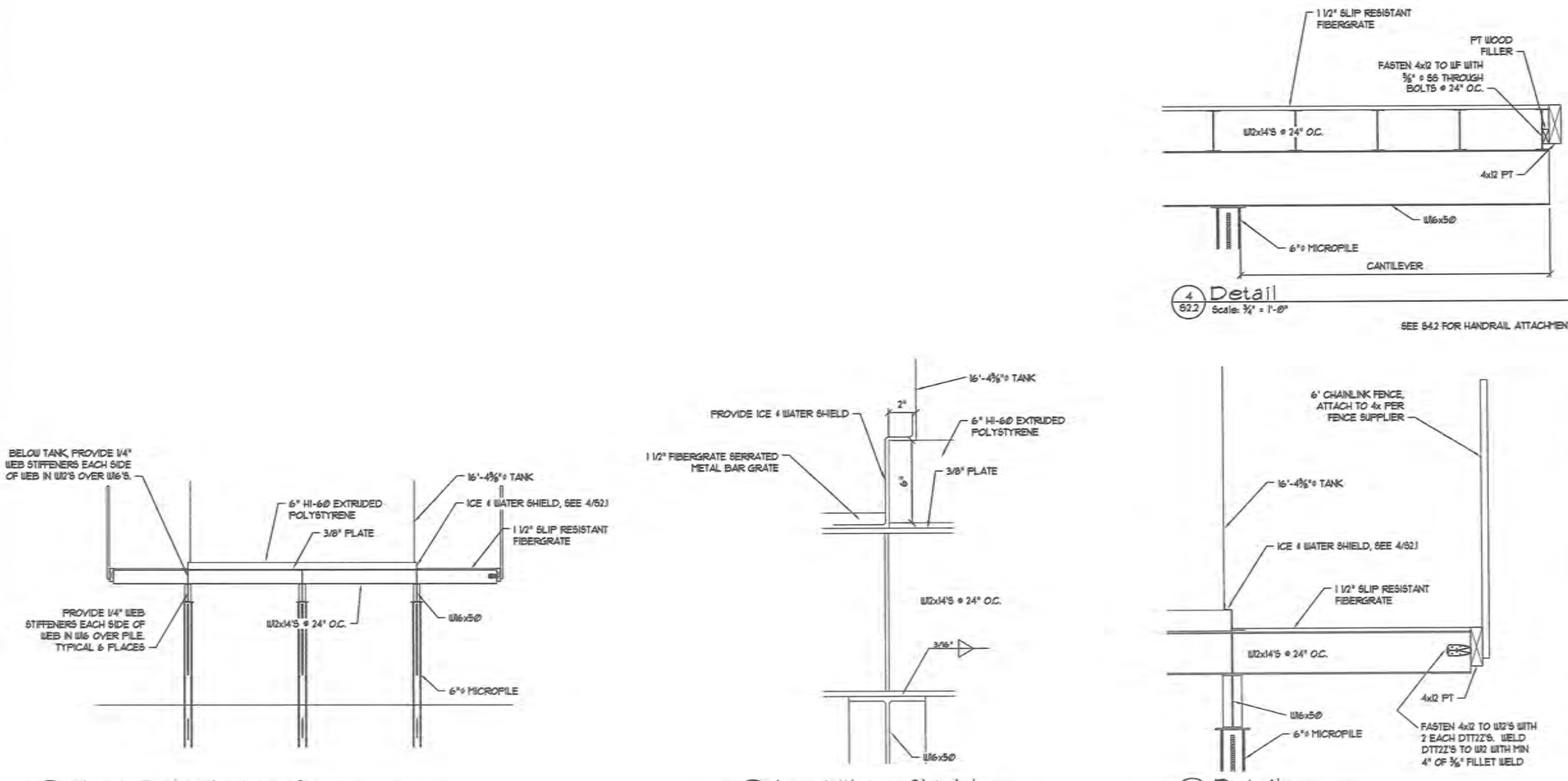

99% DOCUMENTS

Olen Associates, Inc.
Construction Management Engineering Inspections
Phone: (907) 694-0061
Fax: (907) 694-0065
olen@olenassociates.com
16402 Union Drive
Eagle River, AK 99577

SCALE: AS SHOWN

DRAWN FROM BOTH VERTICAL AND HORIZONTAL COORDINATES

IF NOT ONE INCH ON THIS SHEET, ADJUST SCALE ACCORDINGLY

CONSTRUCTION RECORD
FIELD BOOK
STAKING
FOREMAN
AS-BUILT
INSPECTOR

STATE OF ALASKA
BENJAMIN C. OLEN
SC-14183
RENEWAL 4/30/16
REGISTERED PROFESSIONAL ENGINEER

WASHETERIA AND WATER TANK

WASHETERIA FLOOR FRAMING PLAN

CHEFORNAK, ALASKA

CE2 ENGINEERS, INC.
PO BOX 223584 ANCHORAGE, AK 99523 PH: 907-258-5310 FAX: 907-258-5315

REVISION	BY	DATE

Project No. 93058
Date 11/15/16
Designed BCO
Drawn BBJ
Approved CAL

Sheet No. S2.2
SHEET ___ OF ___

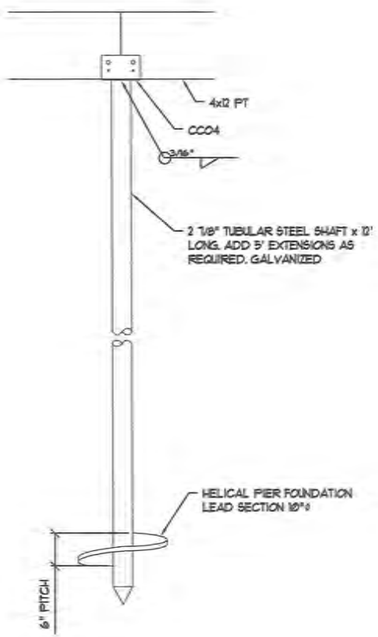

3 S2.3 Helical Pile Detail
Scale: 1½" = 1'-0"

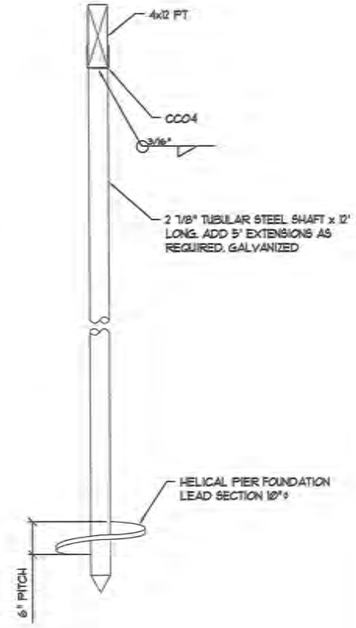

4 S2.3 Helical Pile Detail
Scale: 1½" = 1'-0"

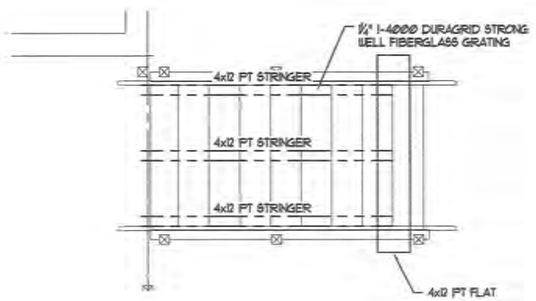

2 S2.3 Exterior Stair Framing Plan
Scale: 3/8" = 1'-0"

NOTE:
EXISTING 9¼" HELICAL PILE ARE ACCEPTABLE AS LONG AS THE PILES ARE BRACED AS SHOWN.

PILE INSTALLATION NOTE
INSTALL HELICAL PILE MINIMUM 10' OR TO MAXIMUM TORQUE AT REFUSAL

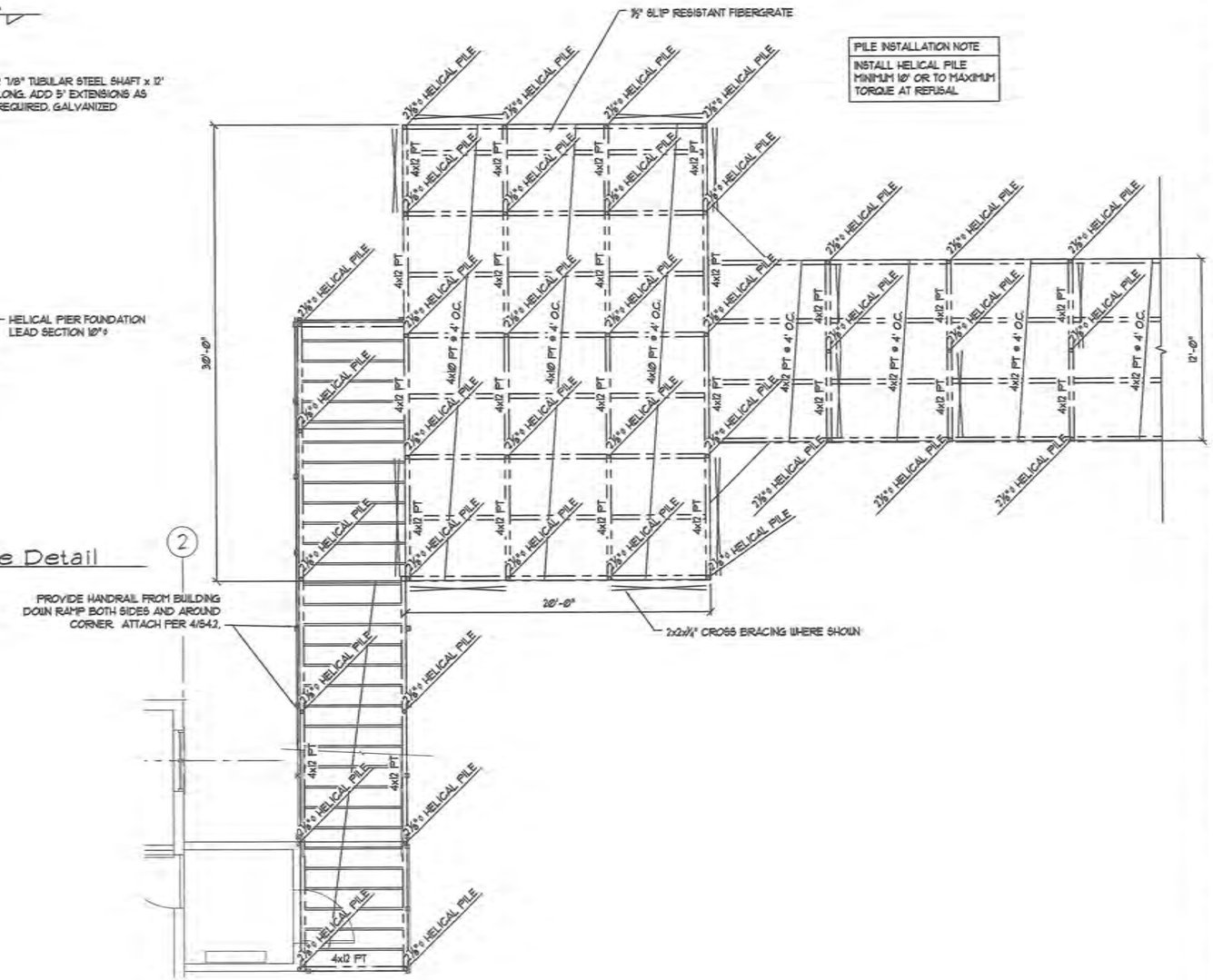

1 S2.3 Parking Deck Framing Plan
Scale: ¼" = 1'-0"

99% DOCUMENTS

Olen Associates, Inc.
Construction Management Engineering Inspections
Phone: (907) 694-6907
Fax: (907) 694-6908
email: bolen@gci.net
14501 Nelson Drive
Eagle River, AK 99577

SCALE: AS SHOWN

BAR IS ONE INCH ON ORIGINAL DRAWING
0 1"
IF NOT ONE INCH ON THIS SHEET, ADJUST SCALES ACCORDINGLY

CONSTRUCTION RECORD
FIELD BOOK
STAKING
FOREMAN
AS-BUILT
INSPECTOR

STATE OF ALASKA
40th
BENJAMIN C. OLEN
SC-4183
9/15/16
REGISTERED PROFESSIONAL ENGINEER

WASHETERIA AND WATER TANK

WASHETERIA
RAMP FRAMING PLAN
EXT. STAIR FRAMING PLAN
CHEFORNAK, ALASKA

CE2 ENGINEERS, INC.
PO BOX 223394 ANCHORAGE, AK 99523 PH: 907-561-1515 FAX: 907-561-1515

REVISION	BY	DATE

Project No. 63068
Date 10/15/16
Designed BCO
Drawn RBJ
Approved OAL

Sheet No.
S2.3
SHEET ___ OF ___

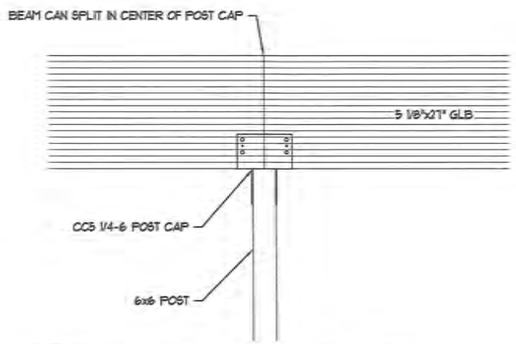

2 / S3.1 Beam Connection Detail
Scale: 3/4" = 1'-0"

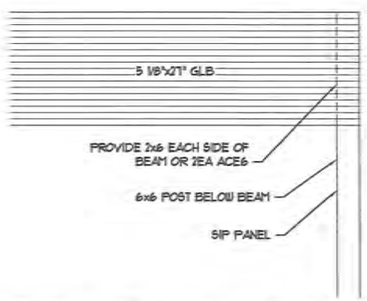

3 / S3.1 Beam Pocket at Endwall Detail
Scale: 3/4" = 1'-0"

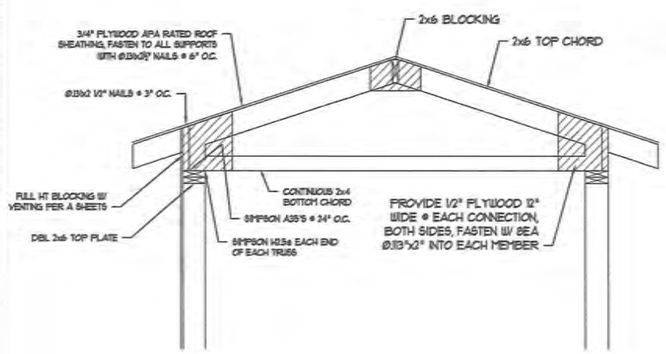

4 / S3.1 Section @ Entry
Scale: 3/4" = 1'-0"

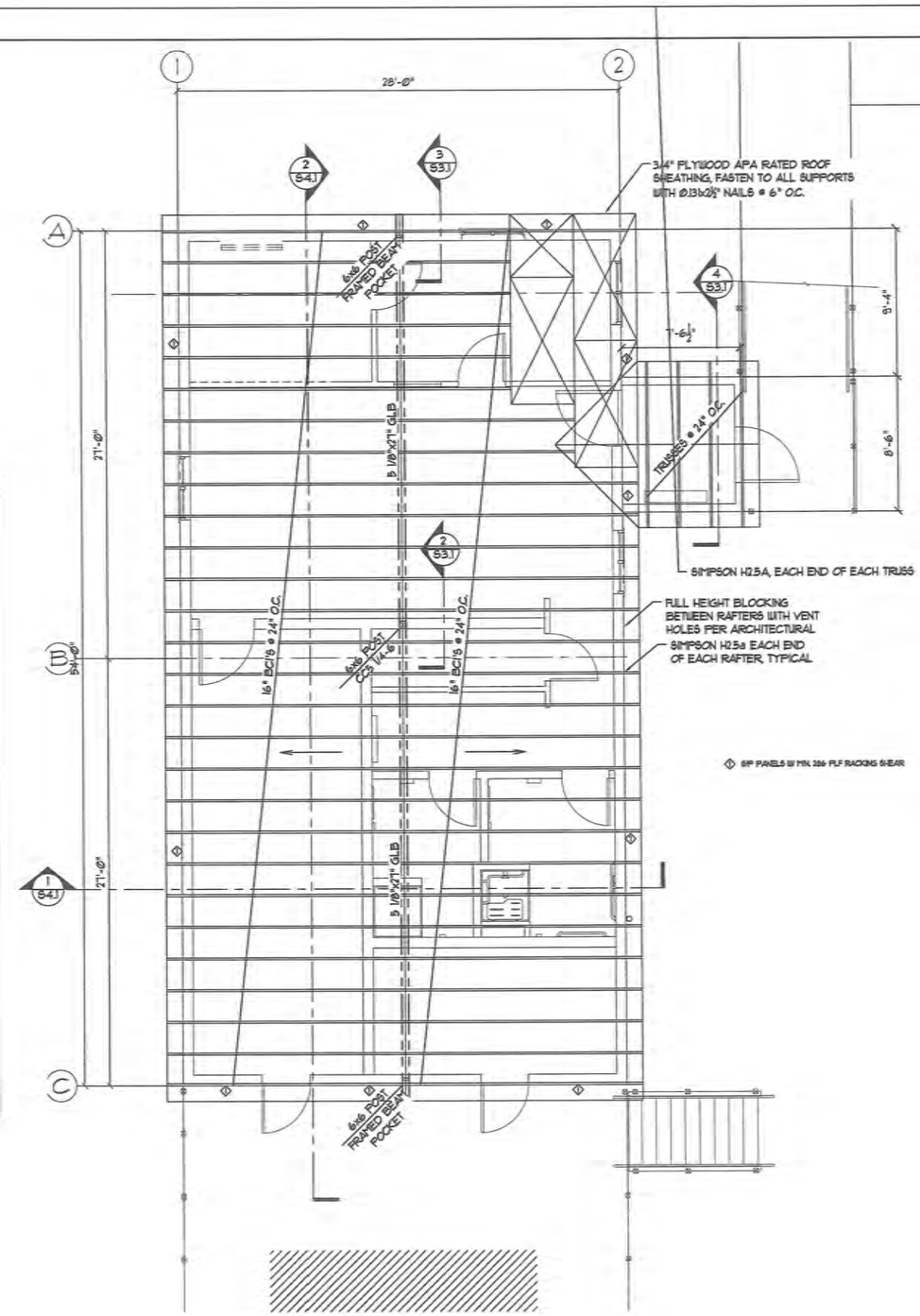

1 / S3.1 Roof Framing Plan
Scale: 1/4" = 1'-0"

99% DOCUMENTS

Olen Associates, Inc.
Construction Management Engineering Inspections
9420 Vanson Drive
Eagle River, AK 99577
Phone: (907) 694-6561
Fax: (907) 694-6565
email: bobwright@aol.com

SCALE: AS SHOWN

BAR IS ONE INCH ON ORIGINAL DRAWING
0 1"
IF NOT ONE INCH ON THIS SHEET, ADJUST SCALES ACCORDINGLY

CONSTRUCTION RECORD
FIELD BOOK
STAKING
FOREMAN
AS-BUILT
INSPECTOR

STATE OF ALASKA
BENJAMIN C. OHN
EC-4183
REGISTERED PROFESSIONAL ENGINEER

WASHETERIA AND WATER TANK

WASHETERIA ROOF FRAMING PLAN

CHEFORNAK, ALASKA

CE2 ENGINEERS, INC.
PO BOX 232368 ANCHORAGE, AK 99523 PH: 907-345-1018 FAX: 907-349-1015

REVISION	BY	DATE

Project No. 630/08
Date 8/15/16
Designed BCO
Drawn RBJ
Approved OAL

Sheet No. S3.1
SHEET ___ OF ___

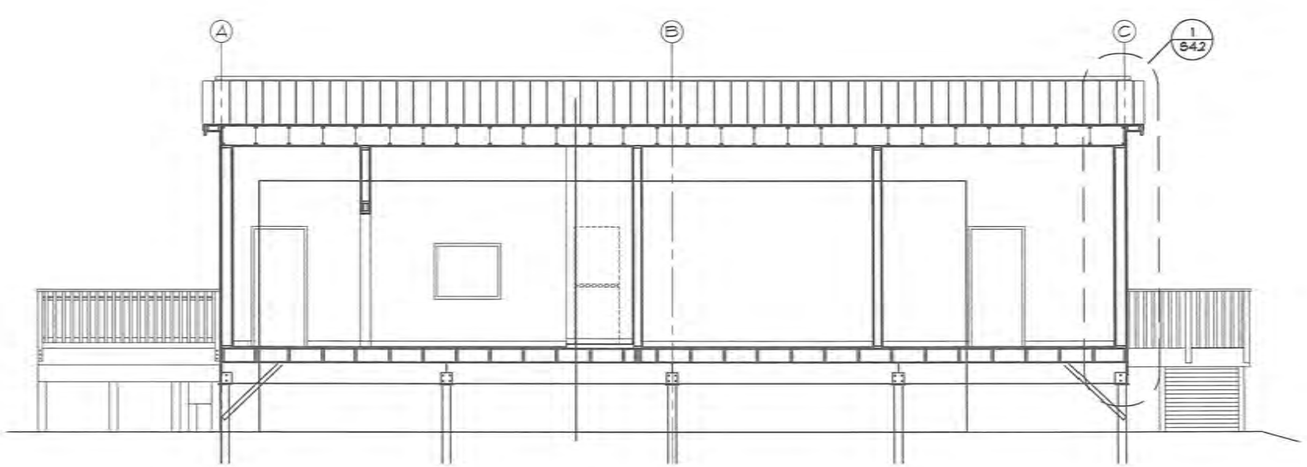

2 S4.1 Building Section
Scale: 1/4" = 1'-0"

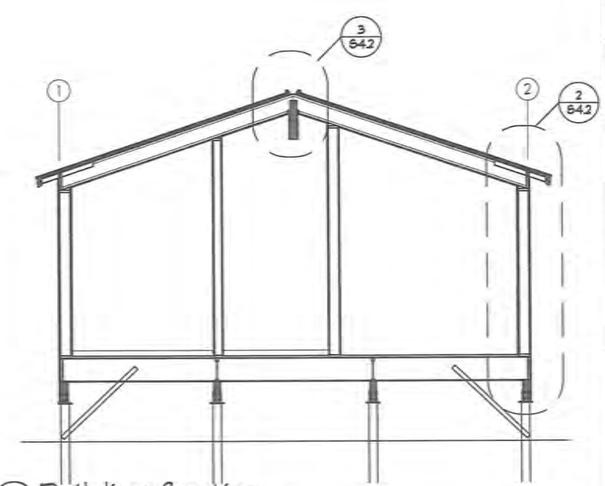

1 S4.1 Building Section
Scale: 1/4" = 1'-0"

99% DOCUMENTS

Oien Associates, Inc.
Construction Management Engineering Inspections
Phone: (907) 694-0907
Fax: (907) 694-0908
Eagle River, AK 99577
email: boiengcust

SCALE: AS SHOWN

BAR IS ONE INCH ON ORIGINAL DRAWING
IF NOT ONE INCH ON THIS SHEET, ADJUST SCALES ACCORDINGLY

CONSTRUCTION RECORD
FIELD BOOK
STAKING
FOREMAN
AS-BUILT
INSPECTOR

STATE OF ALASKA
49th
RICHARD C. OIEN
CE-14163
8/18/16
REGISTERED PROFESSIONAL ENGINEER

WASHETERIA AND WATER TANK
WASHETERIA BUILDING SECTIONS
CHEFORNAK, ALASKA

CE2 ENGINEERS, INC.
PO BOX 232948 ANCHORAGE, AK 99523 PH: 907-349-1010 FAX: 907-349-1015

REVISION	BY	DATE

Project No. 63058
Date 8/15/16
Designed BCO
Drawn RRJ
Approved OAI

Sheet No. S4.1
SHEET ____ OF ____

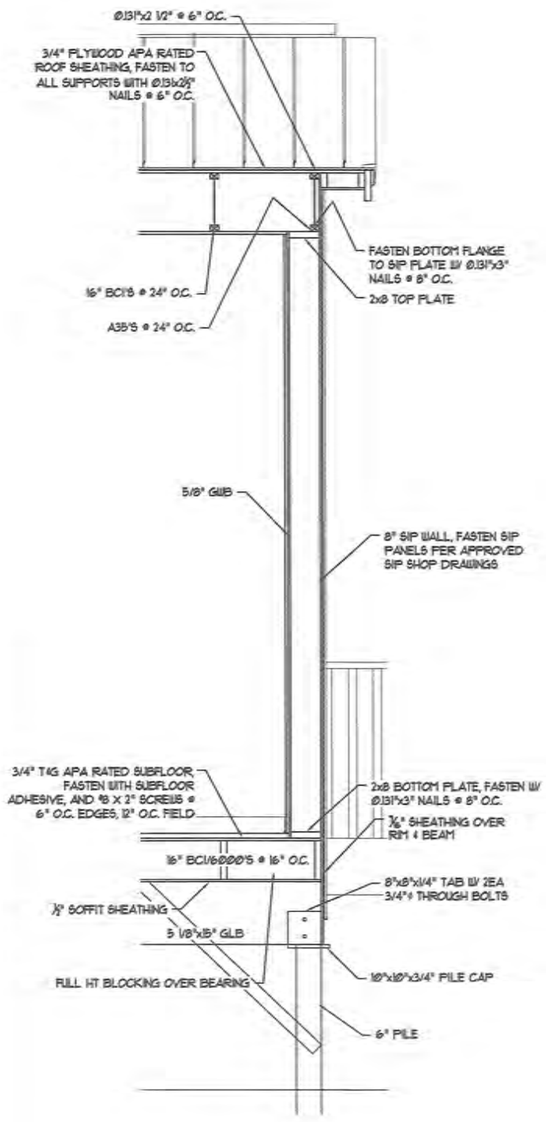

1 S4.2 Wall Section
Scale: ¾" = 1'-0"

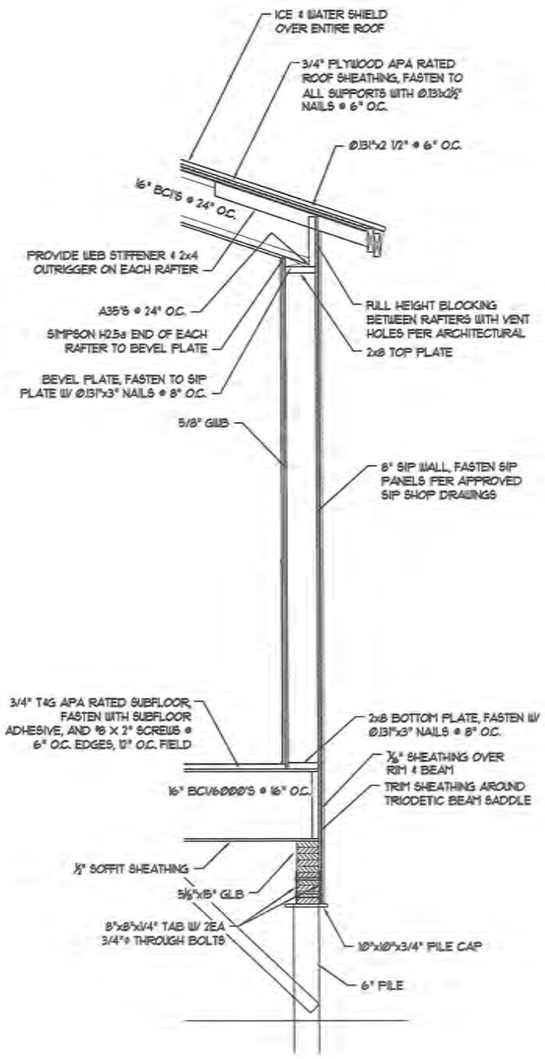

2 S4.2 Wall Section
Scale: ¾" = 1'-0"

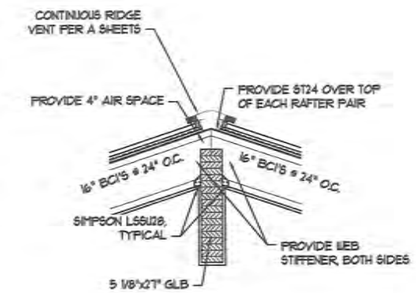

3 S4.2 Peak Detail
Scale: ¾" = 1'-0"

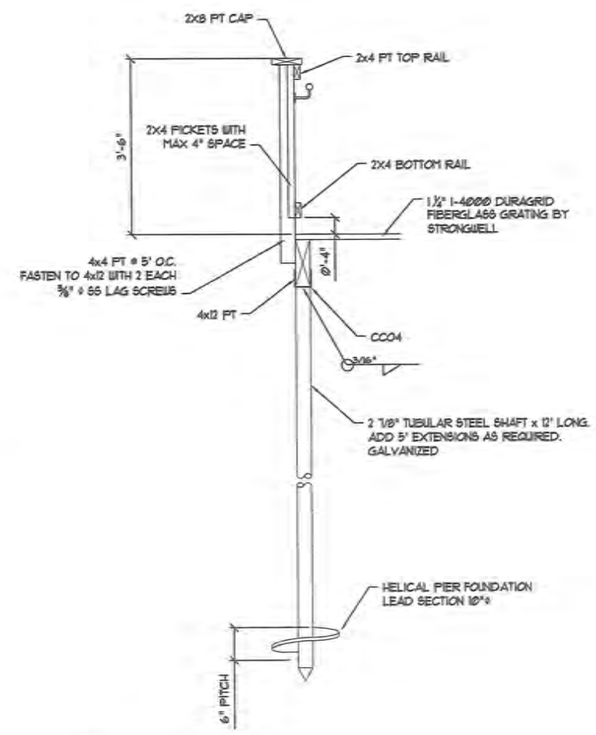

4 S4.2 Handrail Detail
Scale: ¾" = 1'-0"

99% DOCUMENTS

Oien Associates, Inc.
Construction Management Engineering Inspections
Phone: (907) 694-6901
Fax: (907) 694-6905
oiain@oienassociates.com
9420 Vinson Drive
Eagle River, AK 99577

SCALE: AS SHOWN

FOR ASTOR MOUTON PRINTING & STORAGE

0 1 2 3 4 5 6 7 8 9 10 11 12 13 14 15 16 17 18 19 20 21 22 23 24 25 26 27 28 29 30 31 32 33 34 35 36 37 38 39 40 41 42 43 44 45 46 47 48 49 50 51 52 53 54 55 56 57 58 59 60 61 62 63 64 65 66 67 68 69 70 71 72 73 74 75 76 77 78 79 80 81 82 83 84 85 86 87 88 89 90 91 92 93 94 95 96 97 98 99 100

IF NOT THIS BOX ON THIS SHEET, ADJUST SCALES ACCORDINGLY

CONSTRUCTION RECORD

FIELD BOOK	
STAKING	
FOREMAN	
AS-BUILT	
INSPECTOR	

STATE OF ALASKA
BENJAMIN C. OIEN
C-4183
48th
REGISTERED PROFESSIONAL ENGINEER

WASHETERIA AND WATER TANK

WASHETERIA WALL SECTIONS

CHEFORNAK, ALASKA

CE2 ENGINEERS, INC.
PO BOX 220588 ANCHORAGE, AK 99522 PH: 907-349-5119 FAX: 907-349-5115

REVISION	BY	DATE

Project No. 53058
Date 4/15/16
Designed BCO
Drawn RBJ
Approved CAL

Sheet No. S4.2
SHEET ____ OF ____

MECHANICAL / PLUMBING SYSTEMS OVERVIEW

MECHANICAL SYSTEMS FOR THE WASHETERIA ARE DESIGNED TO UTILIZE WASTE HEAT FROM THE POWER HOUSE TO PREHEAT DRYER MAKE UP AIR, PROVIDE BUILDING HEAT, HEAT THE WATER STORAGE TANK, PROVIDE LOOP HEATING FOR THE VILLAGE WATER DISTRIBUTION SYSTEM, PROVIDE HEAT ABOVE GROUND EXPOSED PIPING, HEAT UTILAWAYS, AND HEAT WATER FOR ON SITE LAUNDRY AND FOR ON SITE BATHROOMS. BOILER B-1 IS USED ONLY FOR PROVIDING HEAT FOR RAISING DRYER AIR TEMPERATURES TO A LEVEL ALLOWING FOR DRYING CLOTHES PROPERLY. B-2, B-3 AND B-4 PROVIDE ADDITIONAL HEAT AS REQUIRED FOR THE FACILITY.

MECHANICAL SYSTEMS ARE DESIGNED FOR MAINTENANCE BY LOCAL ON SITE PERSONNEL.
THE OUTSIDE AIR VENTILATION SYSTEM IS DESIGNED FOR OPERATION ONLY WHEN THE FACILITY IS OCCUPIED
THE DRYER MAKE UP AIR SYSTEM IS DESIGNED FOR OPERATION ONLY WHEN DRYERS ARE BEING USED

PLUMBING WATER SYSTEMS INCLUDE WATER STORAGE, WATER PUMPING, WATER HEATING, AND WATER DISTRIBUTION
PLUMBING WASTE SYSTEMS INCLUDE FIXTURE WASTE TO OUTSIDE BUILDING AND GRAY WATER ROUTED OUTSIDE BUILDING.
PLUMBING VENT SYSTEMS INCLUDE FIXTURE VENT AND GRAY WATER VENTING.

UTYILITY WATER FOR THE WASHETERIA IS TAKEN FROM THE VILLAGE WATER SUPPLY AND IS STORED IN AN ON SITE TANK
WATER IS THEN PUMPED FROM THE TANK AND DELIVERED AS HOT AND COLD TO WASHERS AND FACILITY BATHROOMS

WASTE WATER FROM THE BATHROOMS AND SINKS IS ROUTED TO A POINT LEAVING THE BUILDING
GRAY WATER FROM THE WASHING MACHINES IS ROUTED TO A POINT LEAVING THE BUILDING

OPERATION AND MAINTENANCE MANUALS

MECHANICAL CONTRACTORS SHALL PROVIDE OPERATION AND MAINTENANCE MANUAL RECORDS.
RECORDS SHALL CONSIST OF:

1. ONE LOOSE LEAF NOTEBOOK LABELED "O&M MANUAL FOR WASHETERIA". SHEET PROTECTORS SHEET PROTECTORS SHALL BE PROVIDED FOR ALL PAGES IN THE MANUAL.
2. FOR EACH PIECE OF EQUIPMENT, CONTROL, AND FIXTURE A COVER SHEET SHALL BE PROVIDED SHOWING THE FOLLOWING:
   - A. EQUIPMENT DESIGNATION AND LOCATION:
   - B. MANUFACTURER MODEL NUMBER AND DATE OF MANUFACTURE IF STAMPED
   - C. MANUFACTURER MODEL NUMBER AND SERIAL NUMBER
   - D. EQUIPMENT ELECTRICAL DATA: VOLTAGE / AMPERAGE / PHASE
   - E. LEGIBLE PHOTOGRAPH OF THE DATA PLATE
3. FOR EACH PIECE OF EQUIPMENT, CONTROL, AND FIXTURE A MANUFACTURERS OPERATION AND MAINTENANCE MANUAL SHALL BE PROVIDED. MANUALS CAN BE "AS SHIPPED WITH THE ITEM", OBTAINED FROM THE SUPPLIER OR MANUFACTURER, OR DOWN LOADED AS DIRECTED BY THE MANUFACTURER:
   MARK EACH O & M MANUAL WITH EQUIPMENT MODEL NUMBER AND SERIAL NUMBER(S)

GENERAL NOTES:

PROVIDE ALL LABOR, MATERIALS AND EQUIPMENT REQUIRED FOR COMPLETE SAFE WORKABLE SYSTEMS AS INDICATED ON THE DRAWINGS AND AS SPECIFIED. TEST ALL SYSTEMS TO ASSURE PROPER OPERATION. USE NEW EQUIPMENT OF THE LATEST DESIGN.

CONTRACTOR SHALL COMPLY WITH THE APPLICABLE LOCAL, STATE, AND NATIONAL CODES, ORDINANCES, AND REGULATIONS AFFECTING MATERIALS AND METHODS USED AND RECOMMENDED PRACTICES AS SET FORTH BY NFPA, IMC, UPC, IFC, IBC, UL, NEC EXCEPT IN CASES WHERE STATUTES GOVERN.

DURING FINAL INSPECTION, DEMONSTRATE THAT THE ENTIRE INSTALLATION OPERATES SATISFACTORILY IN ACCORDANCE WITH DRAWINGS.
PROVIDE FLUID AND AIR BALANCE OF MECHANICAL SYSTEMS AND BALANCE REPORT

INSTRUCT OWNERS PERSONNEL FOR OPERATION AND MAINTENANCE PROCEDURES.
INSTALL ALL EQUIPMENT PER MANUFACTURERS RECOMMENDATIONS.
INSTALL EQUIPMENT TO PROVIDE EASE OF ACCESS FOR MAINTENANCE.

PROVIDE ACCESS DOORS FOR CONCEALED EQUIPMENT, VALVES, DAMPERS, AND OTHER MECHANICAL DEVICES REQUIRING SERVICING OR ADJUSTMENT.

DO NOT SPRING OR BEND PIPE TO FIT CONDITIONS OR MAKE-UP JOINTS.
PROVIDE VALVES FOR BRANCH LINES AS REQUIRED OR SHOWN.
MAINTAIN CURRENT "AS-BUILTS" AS THE PROJECT PROGRESSES AND TURN THEM OVER TO THE OWNER AT THE TIME OF FINAL INSPECTION.

MECHANICAL DRAWING LIST

M-1.0 LEGEND DRAWING LIST GENERAL NOTES MECHANICAL/PLUMBING OVERVIEW
M-1.1 EQUIPMENT LIST
M-1.2 EQUIPMENT LIST
M-1.3 MATERIAL LIST-PLUMBING
M-1.4 MATERIAL LIST-PIPING AND HVAC
M-1.5 CONTROLS-SEQUENCE OF OPERATION-MATERIALS
M-1.6 CONTROL DIAGRAMS
M-1.7 BOILER CONTROL DIAGRAMS
M-1.8 UNIT HEATER UH-1, UH-2, UH-3 CONTROL DIAGRAM
M-1.9 CONTROL DIAGRAMS
M-2.0 UNDERFLOOR PLUMBING PLAN
M-2.1 PLUMBING PLAN
M-2.5 PLUMBING DIAGRAMS AND DETAILS
M-3.0 MECHANICAL PLAN-PIPING
M-3.05 MECHANICAL UNDERFLOOR AND UTILAWAY HEATING
M-3.1 MECHANICAL PLAN-HVAC
M-3.2 MECHANICAL SECTIONS
M-3.5 MECHANICAL DETAILS
M-3.6 BOILER DETAILS
M-4.0 HEATING AND WATER SUPPLY DIAGRAM
M-4.1 HEATING AND WATER SUPPLY DIAGRAM

LEGEND

SYMBOL	ABBREV.	DESCRIPTION
		FLOW ARROW
—GHS—	GHS	GLYCOL HEATING SUPPLY
—GHR—	GHR	GLYCOL HEATING RETURN
—HTGHS—	HTGHS	HIGH TEMP GLYCOL SUPPLY
—HTGHR—	HTGHR	HIGH TEMP GLYCOL RETURN
—HETR—	HETR	HEAT TRACE-HYDRONIC PIPING
—CW—	CW	DOM. COLD WATER SUPPLY
—CWC—	CWC	DOM. COLD WATER CIRC.
—HW—	HW	DOM. HOT WATER
—WTHS—	WTHS	WATER TANK HEAT SUPPLY
—WTHR—	WTHR	WATER TANK HEAT RETURN
—W—	W	WASTE OR SEWER
—V—	V	VENT
—GW—	GW	GRAY WATER
—GWV—	GWV	GRAY WATER VENT
	VTR	VENT THROUGH ROOF
		BALL VALVE
	PRV	PRESS. RELIEF VALVE
—|| CO	C.O.	CLEAN OUT
		CHECK VALVE
—FOS—	FOS	FUEL OIL SUPPLY
—FOR—	FOR	FUEL OIL RETURN
	PMP-	PUMP
	ET	EXPANSION TANK
		PRESSURE GAGE'
		THERMOMETER
	TS	THERMOSTAT
NC	NC	VALVE NORMALLY CLOSED
NO	NO	VALVE NORMALLY OPEN
SC	SC	SPEED CONTROL
SW	SW	SWITCH
AAV	AAV	AUTO AIR VENT
	MAV	MANUAL AIR VENT
		CIRCUIT SETTER /BALANCING VALVE
10 X 8		DUCT WIDTH X HEIGHT
	RG-1 300 CFM	GRILL NUMBER AIRFLOW AND DIRECTION
TE	TE	TEMPERATURE ELEMENT

CAPSTONE ENGINEERING LLC
MECHANICAL ENGINEERS
12110 BUSINESS BLVD STE 6 PMB 169
EAGLE RIVER, ALASKA 99577
TELEPHONE & TEXT MSG 907-414-1456

STATE OF ALASKA
FRANK H. BELZ
MECHANICAL
NE 6608
AUG 23, 2016

LEGEND DRAWING LIST NOTES MECH/PLG OVERVIEW
CHEFORNAK WASHETERIA
CHEFORNAK, ALASKA

DATE: AUGUST 23, 2016
DRAWN: F.H. BELZ
CHKD:
SCALE: AS NOTED
REVISED:
JOB NO. C 389

SHEET NO. M-1.0
1 OF 21

BOILER SCHEDULE

NUMBER	TYPE	INPUT	OUTPUT DOE	MFG MODEL	NOTES
B-1	HOT WATER OIL FIRED CAST IRON	189 MBH 1.35 GPH	162 MBH DOE	BURNHAM V8H4W	BASE BOILER, NO CIRCULATOR, ALASKA DOUBLE HIGH LIMITS, LOW WATER CUT OFF, INTERLOCK SWITCH FOR PUMP AND BOILER ROOM FAN, 5 AMPS / 115 V / 1 PH 7 INCH FLUE
B-2 B-3 B-4	HOT WATER OIL FIRED CAST IRON	364 MBH 2.60 GPH	299 MBH DOE	BURNHAM V8H9W	BASE BOILER, NO CIRCULATOR, ALASKA DOUBLE HIGH LIMITS, LOW WATER CUT OFF, INTERLOCK SWITCH FOR PUMP AND BOILER ROOM FAN, 5 AMPS / 115 V / 1 PH 8 INCH FLUE

COIL SCHEDULE

NUMBER	FINNED WIDTH HEIGHT	TYPE BTUH	AIRFLOW AIR PD-MAX	EAT LAT	FLUID MIX	EFT/LFT GPM FLOW	MAX PD FLUID	SELECTION
PHC-1A PHC-1B PHC-2A PHC-2B PHC-3A PHC-3B	17" WIDE 12"HIGH	HEATING 24,000 BTUH	400 CFM 0.20 WC	70 F EAT 125 F LAT	PROP GLYCOL 50/50	180 F EFT 160 F LFT 2.6 GPM	8.0 FT	4 ROW COIL,5/8 TUBES,1 CIRCUIT MFG: SPEED QUEEN- ALLIANCE 17 X 12 COIL
HC-1A HC-1B HC-2A HC-2B HC-3A HC-3B	17" WIDE 12"HIGH	HEATING 22,000 BTUH	400 CFM 0.20 WC	125 F EAT 175 F LAT	PROP GLYCOL 50/50	205 F EFT 190 F LFT 3.2 GPM	8.0 FT	4 ROW COIL,5/8 TUBES,1 CIRCUIT MFG: SPEED QUEEN- ALLIANCE 17 X 12 COIL

PUMP SCHEDULE

NUMBER	TYPE	FLUID PUMPED	GPM	FLUID-TDH FLUID TEMP	PUMP SELECTION
PMP-1A PMP-1B	INLINE CIRCULATOR WET ROTOR	PROP GLYCOL 50/50	23 GPM	17 FT TDH 205 F	GRUNDFOS MAGNA3 32-100F GRUNDFOS 98126824 2 AMPS / 115 V / 1 PH
PMP-2A PMP-2B	INLINE CIRCULATOR WET ROTOR	PROP GLYCOL 50/50	88 GPM VARIES	42 FT TDH 180 F	GRUNDFOS MAGNA3 50-150F GRUNDFOS 98126852 6 AMPS / 208 V / 1 PH
PMP-3	INLINE CIRCULATOR WET ROTOR	ETHYL GLYCOL 50/50	91 GPM	10 FT TDH 190 F	GRUNDFOS MAGNA3-50-80F GRUNDFOS 98126840 4 AMPS /208 V / 1 PH
PMP-4A PMP-4B	INLINE CIRCULATOR WET ROTOR	WATER	15 GPM	17 FT TDH 50 F	UP26-99BF 245 WATTS/ 115 V/ 1 PH
PMP-5	INLINE CIRCULATOR WET ROTOR	ETHYL GLYCOL 50/50	33 GPM	12 FT TDH 190 F	GRUNDFOS UPS 32-80/2 1/2 HP / 208 V / 3 PH
PMP-6A PMP-6B	PRESSURE PUMP V SPEED	WATER	50 GPM	50 PSIG 50 F	GOULDS 22SV8RF8F60 3 HP / 208 V / 3 PH
PMP-7	INLINE CIRCULATOR WET ROTOR	COLD WATER	5 GPM	20 FT TDH 50 F	GRUNDFOS UPS 26-64F 1/12 HP / 115 V / 1 PH
PMP-8	INLINE CIRCULATOR WET ROTOR	PROP GLYCOL 40/60	12 GPM	25 FT TDH 90 F	UP26-99F 3 AMPS/ 115 V/ 1 PH

VARIABLE FREQUENCY DRIVE SCHEDULE/PRESSURE TRANSDUCERS

VFD-6A VFD-6B	ABB #ACQ550-PC-017A-2
PT-6A PT-6B	SETRA #2091100PG2M11A1

06-12-2016

UNIT HEATER SCHEDULE

NUMBER	TYPE	OUTPUT	FLUID	EGT/LGT FLOW	MFG MODEL	NOTES
UH-1 UH-2 UH-3	HOT WATER PROPELLOR TYPE	100 MBH	50/50 PROP GLYCOL	180 F EGT 155 F LGT 9 GPM	MODINE HC 165	1/3 HP / 115 V / 1 PH TE MOTOR
UH-4 UH-5 UH-7 UH-9	HOT WATER PROPELLOR TYPE	40 MBH	50/50 PROP GLYCOL	180 F EGT 155 F LGT 3.6 GPM	MODINE HC 86	1/8 HP / 115 V / 1 PH TE MOTOR
UH-6 UH-8 UH-10 UH-11 UH-12	HOT WATER PROPELLOR TYPE	7 MBH	50/50 PROP GLYCOL	180 F EGT 160 F LGT 1.0 GPM	MODINE HC 18	1/60 HP / 115 V / 1 PH TE MOTOR

FAN SCHEDULE

NUMBER	TYPE	CFM	EXT STATIC	MFG MODEL	NOTES
EF-1	INLINE FAN	235 CFM	0.4 IN WC	FANTEC FG-8	118 WATTS / 115 V / 1 PH W/ MFR SPEED CONT STEEL HOUSING/ 8 INCH FLANGES
EF-2 EF-3	INLINE FAN	300 CFM	0.4 IN WC	FANTEC FG-8	118 WATTS / 115 V / 1 PH W/MFR SPEED CONT STEEL HOUSING/ 8 INCH FLANGES
BRF-1	INLINE FAN	1500 CFM	0.4 IN WC	GREENHECK BSQ-140-3	1/3 HP / 115 V / 1 PH BELT DRIVE/ SINGLE DRIVE, TE MOTOR/ GREASEABLE BEARINGS W/ LUBE LINES/ TOGGLE SWITCH, HANGING RUBBER ISOLATORS
MUF-1	INLINE FAN	840 CFM	0.6 IN WC	GREENHECK BSQ-120-3	1/3 HP / 115 V / 1 PH BELT DRIVE/ SINGLE DRIVE, TE MOTOR/ GREASEABLE BEARINGS W/ LUBE LINES/ TOGGLE SWITCH, HANGING RUBBER ISOLATORS
CF-1 CF-2 CF-3 CF-4	CEILING FAN	12,500 CFM	0 IN WC	LEADING EDGE 3620-1	.65 AMPS / 115 V / 1 PH WITH MFR 12003 SPEED CONTROL

EXPANSION AND PRESSURE TANK SCHEDULE

NUMBER	TYPE	ACCEPT-ANCE	FLUID TEMP	MFG MODEL	NOTES
ET-1	BLADDER EXPANSION	30 GAL	PROP GLYCOL	AMTROL SX 90	180 F GLYCOL SYSTEM EXPANSION TANK
ET-2	BLADDER EXPANSION	3.2 GAL	PROP GLYCOL	AMTROL EX 90	205 F GLYCOL SYSTEM EXPANSION TANK
ET-3	BLADDER EXPANSION	4.4 GAL	HOT WATER	AMTROL ST-12C	120 F POTABLE WATER
HT-1	BLADDER PRESSURE WELL TYPE	34 GAL	COLD WATER	AMTROL WX-250	60 F POTABLE WATER
ET-4	BLADDER EXPANSION	3.2 GAL	PROP GLYCOL	AMTROL EX 90	90 F GLYCOL SYSTEM EXPANSION TANK

CAPSTONE ENGINEERING LLC
MECHANICAL ENGINEERS
12110 BUSINESS BLVD. STE 6 PMB 169
EAGLE RIVER, ALASKA 99577
TELEPHONE & TEXT MSG 907-414-1456

STATE OF ALASKA
FRANK H. BELZ
ME 6696
REGISTERED PROFESSIONAL ENGINEER

AUG 23, 2016

EQUIPMENT LIST
CHEFORNAK WASHETERIA
CHEFORNAK, ALASKA

DATE: AUGUST 23, 2016
DRAWN: F.H. BELZ
CHKD:
SCALE: AS NOTED
REVISED:
JOB NO: C 389

SHEET NO: M-1.1
2 OF 21

HEAT EXCHANGER SCHEDULE							
NUMBER	TYPE	HOT SIDE	HOT SIDE FLOW	COLD SIDE	COLD SIDE FLOW	CAPACITY	MFG: MODEL NUMBER
HX-1	PLATE & FRAME DOUBLE WALL	170 EGT 135F LGT 3 PSI PD MAX	10 GPM 50/50 ETHYL GLYCOL	45 F EWT 75 F LWT 3 PSI PD MAX	10 GPM WATER	300 MBH	AMERIDEX X-5-14 2"NPT PORTS
HX-2	PLATE & FRAME SINGLE WALL	185F EGT 165F LGT 3 PSI PD MAX	91 GPM 50/50 ETHYL GLYCOL	155F EGT 175F LGT 3 PSI PD MAX	88 GPM 50/50 PROP GLYCOL	800 MBH	AMERIDEX X-30-47 4"PORTS-150# FLANGED
HX-3	PLATE & FRAME SINGLE WALL	175F EGT 155F LGT 3 PSI PD MAX	17 GPM 50/50 ETHYL GLYCOL	60 F EGT 90 F LGT 3 PSI PD MAX	12 GPM 50/50 PROP GLYCOL	150 MBH	AMERIDEX SL-70-20-TK 1 1/2"NPT PORTS

HOT WATER MAKER SCHEDULE					
NUMBER	TYPE	DEMAND	HEATING BTUH	GLYCOL FLOWS	SELECTION
HWM-1	TANK TYPE DW COIL SS CONST	202 GPH 40 F EWT 115F LWT	HEATING 118 K BTUH	180 F EGT 155 F LGT 10 GPM	SUPERSTOR SSU-80 DW WITH MFG RECOMMENDED CONTROLLER
HWM-2	TANK TYPE DW COIL SS CONST	70 GPH 40 F EWT 115F LWT	HEATING 30 K BTUH	180 F EGT 150 F LGT 3 GPM	SUPERSTOR SSU-60 DW WITH MFG RECOMMENDED CONTROLLER

DAMPER SCHEDULE-MOTORIZED - CONTROL- BACKDRAFT				
NUMBER	TYPE	SIZE	CONTROL	MFG MODEL
BD-1	LOW LEAKAGE OBD	14"WIDE X 8"HIGH	LOCKING QUADRANT	RUSKING CD-50 WITH LOCKING QUADRANT
BD-2	LOW LEAKAGE OBD	14"WIDE X 8"HIGH	LOCKING QUADRANT	RUSKING CD-50 WITH LOCKING QUADRANT
BD-3	LOW LEAKAGE OBD	12"WIDE X 10"HIGH	LOCKING QUADRANT	RUSKING CD-50 WITH LOCKING QUADRANT
BDD-1	INLINE BACKDRAFT DAMPER	10"WIDE X 8"HIGH	COUNTER WEIGHT	RUSKIN CBD2 OR EQUAL
BDD-2 THRU BDD-7	INLINE BACKDRAFT DAMPER	8 INCHES ROUND	SPRRING CLOSED	FANTECH RSK 8 OR EQUAL
MD-1	INLINE MOTORIZED DAMPER	48"WIDE X 10"HIGH	DAMPER MOTOR	RUSKIN CD-50 WITH BELIMO LF24 SPRING RETURN ACTUATOR 24 VAC 7 VA-35 IN LB
MD-2	INLINE MOTORIZED DAMPER	10"WIDE X 8"HIGH	DAMPER MOTOR	RUSKIN CD-50 WITH BELIMO LF24 SPRING RETURN ACTUATOR 24 VAC 5 VA-35 IN LB
MD-3	INLINE MOTORIZED DAMPER	10"WIDE X 10"HIGH	DAMPER MOTOR	RUSKIN CD-50 WITH BELIMO LF24 SPRING RETURN ACTUATOR 24 VAC 5 VA-35 IN LB

LAUNDRY EQUIPMENT					
NUMBER	TYPE	CAPACITY	OPERATOR TYPE	ELECTRICAL DATA	MFG: MODEL NUMBER
WM-1 WM-2	FRONT LOAD WASHER	20 LB	TOKEN OPERATED TYPE 0.990 DIA. NUMBER 118-5	0.8 KW/ 120 V 1 PHASE 60 HZ	CONTINTAL GIRBAU EH020XA132112101 SOFT MOUNT
WM-3 WM-4 WM-5 WM-6	FRONT LOAD WASHER	30 LB	TOKEN OPERATED TYPE 0.990 DIA. NUMBER 118-5	0.84 KW/ 208-240 V 1 PHASE 60 HZ	CONTINTAL GIRBAU EH030X1132111101 SOFT MOUNT
CD-1A/1B CD-2A/2B CD-3A/3B	STACKED CLOTHES DRYER	30 LB(2)	TOKEN OPERATED TYPE 0.990 DIA. NUMBER 118-5	6.4 A/ 208-240 V 3 PHASE 60 HZ	SPEED QUEEN STT30S-BC STACKED DRYER-30 LB

NOTE: CLOTHES DRYERS ARE STACKED UNITS IN A SINGLE CABINET- SINGLE POINT ELECTRICAL CONNECTION
BOTTOM DRYER IS THE A UNIT AND TOP DRYER IS THE B UNIT
TOP AND BOTTOM DRYERS HAVE SEPARATE HEATING COILS
TOP AND BOTTOM DRYERS HAVE A COMMON EXHAUST

DAY TANK

DT-1 DAY TANK: 50 GALLON TANK WITH 150 PERCENT CONTAINMENT BASIN. SINGLE TRANSFER TANK FILL PUMP 1/3 HP / 115 V / 1 PH. INCLUDES LEVEL GAGE, MANUAL FILL CAP, CONTROLS, CONTAINMENT ALARM, LEVEL CONTROL, PANEL, SOLENOID 3/4" SHUTOFF VALVE, 4 DIP TUBES FOR BOILERS, PRIMER PUMP FOR FILL PUMP
MFG: TRAMONT TRS SERIES OR APPROVED EQUAL

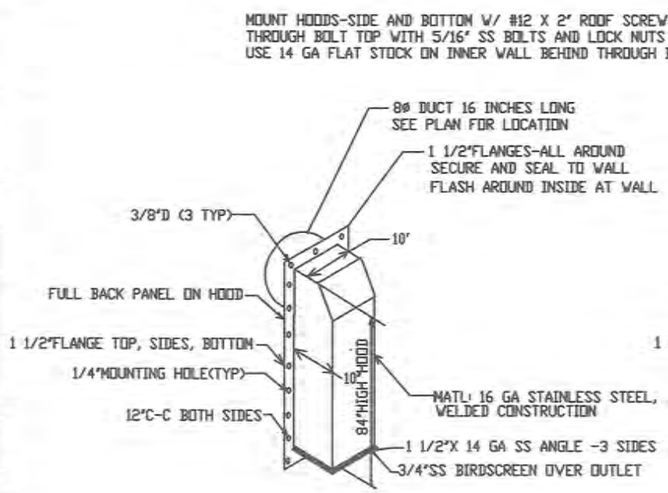

HOOD 10"W X 10"D X 84"HIGH
EXHAUST HOOD DH-1, DH-2, DH-3

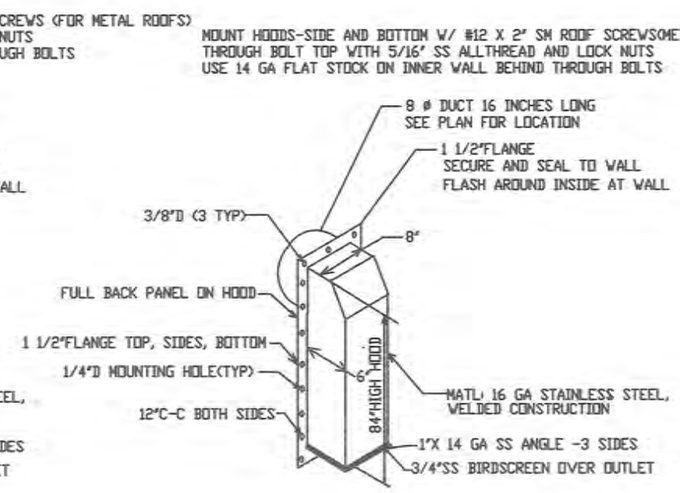

HOOD 8"W X 6"D X 84"HIGH
EXHAUST HOOD EH-1, EH-2, EH-3

EXHAUST HOOD DETAILS

NO SCALE

CAPSTONE ENGINEERING LLC
MECHANICAL ENGINEERS
12110 BUSINESS BLVD STE 6 PMB 169
EAGLE RIVER, ALASKA 99577
TELEPHONE & TEXT MSG 907-414-1456

STATE OF ALASKA
AUG 23, 2016

EQUIPMENT LIST & DETAILS
CHEFORNAK WASHETERIA
CHEFORNAK, ALASKA

DATE: AUGUST 23, 2016
DRAWN: F.H. BELZ
CHKD:
SCALE: AS NOTED
REVISED:
JOB NO. C 389

SHEET NO. M-1.2
3 OF 21

PLUMBING WATER DISTRIBUTION MATERIAL

PIPING SHALL BE TYPE L HARD DRAWN COPPER
WITH WROUGHT COPPER FITTINGS.
AQUATHERM PP-R GREEN PIPE MAY BE USED IN LIEU OF COPPER
PEX TUBING IS TO BE USED WHERE PIPING
IS IN WALL CAVITIES
USE "BRIDGIT" OR EQUIVALENT NO-LEAD SOLDER
FOR COPPER JOINTS
FIXTURE CONNECTIONS, (TOILETS, LAVATORIES,
SINKS). SUPPLY PIPING FROM STOPS TO FIXTURE
PROVIDE STAINLESS STEEL BRAIDED FLEX CONNECTOES
(AQUAFLOW OR EQUAL).

VALVES SHALL BE FULL PORT BALL-TYPE 2" & SMALLER

USE SWEAT OF NPT CONNECTIONS

MFG: HAMMOND OR EQUAL RATED 400 PSI WOG

CHECK VALVES: 2" AND UNDER BRONZE SPRING CHECK

MFG: HAMMOND FIG. 947 C x C, U.O.N.

WATER STOPS: PROVIDE PLATED BRASS 1/4 TURN TYPE
WITH STAINLESS ESCUTCHEON

PLUMBING WATER PIPING ACCESSORIES

WHA-1 WATER HAMMER ARRESTOR: MFG: SMITH 5005 OR EQUAL

TP-1 TRAP PRIMER UNIT: MFG: PPP 500 SS STAINLESS STEEL

FM-1: TANK FILL FLOW METER: INLINE TYPE RECORDING METER: RESETTABLE: 1"NPT
MFG: BADGER METER OR EQUAL

TG-1: ULTRASONIC TANK GAGE WITH DIGITAL READOUT.

AD-1: SHOWER VALVE ACCESS DOOR: 12 INCH WIDE X 24 INCH HIGH HINGED DOOR
16 GAUGE STAINLESS STEEL WITH KEY LOCK MFG: ACUDOR UF-5000 OR EQUAL

HB-2 PARTS LIST

1 1/4" LOCKABLE BALL VALVE
1 1/4" BRASS MALE CAMLOCK X 1 1/4 FPT CONNECTOR
1 1/4" BRASS DUST CAP CAMLOCK
DT COUPLER 12V #107112

PLUMBING WASTE, GRAY WATER AND VENT PIPING

PROVIDE ABS, DWV COPPER, NO HUB CAST IRON, BRASS, OR OTHER
APPROVED MATERIAL.

PLUMBING WASTE AND VENT PIPING ACCESSORIES

ROOF VTR FLASHING: PROVIDE DEKTITE (OR EQUAL) FLASHINGS AND SEALS

ROOF VTR: PROVIDE SNOW SPLITTER PER VTR DETAIL

PLUMBING PIPING INSULATION

ALL POTABLE HOT EXPOSED WATER PIPING TO BE INSULATED WITH 1/2 INCH
THICK "MICROLOCK" RIGID WITH APT JACKET. PROVIDE ZESTON FITTINGS FOR
ELBOWS AND TEES. IN WALL PEX IS NOT INSULATED

INSULATION FOR VTR: 2" FIBERGLASS WITH VAPOR BARRIER

PLUMBING PIPING HANGERS

PROVIDE ROD AND CLEVIS OR TRAPEZE HANGERS FOR HANGING PIPING
PROVIDE PLATED HANGERS OR UNISTRUT CUSHA CLAMPS FOR COLD WATER AND
RIGID INSULATION WITH SHIELDS FOR HOT WATER.
PROVIDE WALL HANGERS AS REQUIRED

HANGER SPACING AND SWAY BRACING PER NFPA 13
PROVIDE UNISTRUT CUSH A CLAMPS FOR PUMP PIPING AREAS TO ALLOW FOR
PIPE EXPANSION AND TO REDUCE PIPE STRAIN.

ASV-1 ANTI SCALD VALVE

3 WAY SELF POWERED VALVE 1"SWEAT UNION CONNECTIONS: MFG: HONEYWELL AM-1 1070 1"

THERMOMETERS

PROVIDE 2" DIAL TYPE THERMOMETERS WITH THERMOWELLS: APPROPRIATE RANGE.
MFG: TRERICE OR EQUAL

PLUMBING GENERAL NOTES

PROVIDE CODE REQUIRED CLEANOUTS AT SINKS AND OTHER AREAS AND WHERE SHOWN
DISINFECT POTABLE WATER SYSTEMS PER CODE
MATERIALS AND FIXTURES SHALL BE AS SHOWN OR EQUAL,
ALL FIXTURE COLORS SHALL BE PER ARCHITECT APPROVAL
PROVIDE FLANGED CONNECTIONS OR UNIONS TO ALLOW FOR EQUIPMENT SERVICE

SEISMIC RESTRAINTS

PROVIDE CODE APPROVED WALL STRAPS FOR HOT WATER MAKERS AND HYDROPNEUMATIC TANKS
SWAY BRACE HANGING PIPING PER NFPA 13
PROVIDE GALVANIZED STEEL BASES LAGGED TO FLOOR AND BOLTED TO PUMPS FOR BASE
MOUNTED PUMPS. BASES MAY BE FORMED OR WELDED CONSTUCTION

SHOWER TOKEN-TIME CONTROL 2 SYSTEMS

ST-1, ST-2 SHOWER TIMER SYSTEMS

SYSTEM: SYSTEM IS A MONARCH MONAQSYSTEM1 ONE SHOT WITH SHOWER METER,
TOKEN SLIDE OPERATOR, AND 120 / 24 VAC TRANSFORMER:VENDOR: AUTOMATED LAUNDRY SYSTEMS

SHV-1: SHOWER ON-OFF VALVE: SOLENOID VALVE(NC) MFG: ASCO 2/2 8221 1/2" 24 VAC COIL

PLUMBING FIXTURES OR EQUAL MAY BE PROVIDED

L-1 LAVITORY: WALL MOUNT VITROUS CHINA HANDICAP TYPE W/ SINGLE LEVER HANDICAP MIXING FAUCET
MFG: KOHLER BRENHAM K-1999-4 WITH 4 INCH CENTERS AND DELTA FAUCET 520 MPU INCL POP UP DRAIN
PROVIDE WALL MOUNT KIT, CONCEALED ARMS, WASTE PIPE COVER FOR HANDICAP PROTECTION UNDER LAV.

L-2 LAVITORY: WALL MOUNT VITROUS CHINA TYPE W/ SINGLE LEVER HANDICAP MIXING FAUCET
MFG: KOHLER BRENHAM K-1999-4 WITH 4 INCH CENTERS AND DELTA FAUCET 520 MPU INCL POP UP DRAIN
PROVIDE WALL MOUNT KIT, CONCEALED ARMS

WC-1 WATER CLOSET: TANK TYPE ELONGATED BOWL FLUSH TANK TYPE TOILET
HANDICAP HEIGHT, WITH OPEN FRONT SOLID PLASTIC SEAT. (WHITE COLOR)
MFG: KOHLER HIGHLINE K-76301 OR EQUAL, SEAT:KOHLER K-4731-C OR EQUAL

WC-2 WATER CLOSET: TANK TYPE ELONGATED BOWL FLUSH TANK TYPE TOILET
COMFORT HEIGHT, WITH OPEN FRONT SOLID PLASTIC SEAT. (WHITE COLOR)
MFG: KOHLER HIGHLINE K-76301 OR EQUAL, SEAT:KOHLER K-4731-C OR EQUAL

SH-1 SHOWER: 36 X 36 INSIDE HANDICAP SHOWER KIT: FIBERGLASS PANEL SET UP SURROUND
FIBERGLASS BASE MEETS ADA TWO STAINLESS STEEL GRAB BARS, FOLD DOWN SEAT
MFG: EL MUSTEE CAREGIVER MUSTEE 3739M FLOOR KIT, MUSTEE 572WHT WALL KIT ,
RIGHT HAND FOLD DOWN SEAT MUSTEE 390.403. CORNER GRAB BAR MUSTEE 390.304
VERTICAL GRAB BAR: MUSTEE 390.305. SEAL KIT 360.210
DELTA T-13230 SHOWER, DELTA 57011 HAND SHOWER. PROVIDE SHOWER CURTAIN AND ROD

SH-2 SHOWER: 36 X 36 SHOWER KIT: FIBERGLASS PANELS AND BASE SET UP KIT
WITH INTEGRAL SOAP LEDGES. SINGLE LEVER HANDLE FAUCET WITH TOP SPRAY NOZZLE
MFG; EL MUSTEE 3636M BASE, MUSTEE 736WHT WALL KIT. DELTA T13239 SHOWER. SHOWER CURTAIN W/ ROD

LS-1 LAUNDRY SINK: FREE STANDING STAINLESS STEEL SINK. 18" X 18" WITH BACKSPLASH. MIXING FAUCET
WITH SWING SPOUT. MFG: ADVANCE TABCO 4-18-18 SINK W/ REGENCY FAUCET OR EQUAL

FD-1 FLOOR DRAIN. GENERAL DUTY TYPE SUITABLE FOR FLOOR IN AREA. ADJ HGT. MFG: SMITH OR EQUAL

FD-2 FLOOR DRAIN. GENERAL DUTY TYPE SUITABLE FOR FLOOR IN AREA. ADJ HGT. MFG: SMITH OR EQUAL

US-1 UTILTIY SINK: FLOOR SINK-MOLDED TYPE 24" X 24" X 10" D WITH WALL MIXING FAUCET.
PROVIDE WALL BACK SPLASH, MOP HOLDER. MFG: ZURN Z1996-24 OR EQUAL WITH SERVICE FAUCET,
MOP HOLDER, SS FABRICATED WALL BACKSPLASH 36"X 24"

CAPSTONE ENGINEERING LLC
MECHANICAL ENGINEERS
12110 BUSINESS BLVD. STE 6, PMB 169
EAGLE RIVER, ALASKA 99577
TELEPHONE & TEXT MSG 907-414-1436

STATE OF ALASKA
Frederick A. Belz
NO. 6698
REGISTERED PROFESSIONAL ENGINEER

AUG 23, 2016

PLUMBING FIXTURES-MATERIALS-NOTES
CHEFORNAK WASHETERIA
CHEFORNAK, ALASKA

DATE: AUGUST 23, 2016
DRAWN: F.H. BELZ
CHKD:
SCALE: AS NOTED
REVISED:
JOB NO. C389

SHEET NO. M-1.3
4 OF 21

GLYCOL PIPING MATERIAL

GLYCOL PIPING SHALL BE TYPE L HARD DRAWN COPPER
WITH WROUGHT COPPER FITTINGS, PEX TUBING, HDPE,
BLACK STEEL, GALVANIZED STEEL, BRASS, OR CAST IRON
USE SILVER BEARING SOLDER FOR COPPER PIPING JOINTS
VALVES SHALL BE BRASS FULL PORT BALL-TYPE
USE SWEAT OF NPT CONNECTIONS
MFG: HAMMOND OR EQUAL RATED 400 PSI WOG
CHECK VALVES: BRONZE SWING CHECK
MFG: HAMMOND OR EQUAL
NOTE: GLYCOL PIPING CONNECTIONS TO RADIATOR SYSTEM IN POWER HOUSE
SHALL FOLLOW EXISTING SYSTEM CONSTRUCTION

GLYCOL PIPING ACCESSORIED

AUTO AIR VENTS: ¼" MPT, TACO #426 OR EQUAL, MOUNTED
ON ½" BALL ISOLATION VALVE U.O.N.
FLOW CONTROL VALVES/CIRCUIT SETTERS: TACO ACUF SERIES
PRESSURE GAGES: BOURDON TUBE TYPE 2" DIAL
THERMOMETERS: STRAP ON TYPE- DIAL INDICATOR
THERMOMETERS: STRAP ON TYPE- DIAL INDICATOR
GT-1: GLYCOL MIX BARREL: NOMINAL 30 GALLON TANK:
MFG: ACE AC00032N1V2 WITH BLACKMER MODEL 414 B OR EQ
AS-1 AIR SCOOP 3 INCH SIZE MFG: TACO 436 OR EQUAL
AS-2, AS-3 AIR SCOOP 1 1/2 INCH SIZE MFG: TACO 433 OR EQUAL
MAV MANUAL AIR VENT: SCREWDRIVER VENT MFG: TACO 417 OR EQUAL
AAV AUTO AIR VENT: VENT WITH 1/2"ISOLATION VALVE MFG: TACO 418 OR EQUAL

GLYCOL-DOMESTIC HW PIPING INSULATION GHS-GHR, HW, HETR COPPER

ALL GLYCOL PIPING EXCEPT HETR PEX SHALL BE INSULATED, VALVES ARE NOT INSULATED:
INSULATION: GHS-GHR(180 F PIPING), HW PIPING: 1 INCH FIBERGLASS WITH SEALING
HETR COPPER 1/2" FIBERGLASS W/ SEALING JACKET
JACKET AND FITTING COVERS
HTGHS-HTGHR(205 F PIPING): 1 1/2 INCH FIBERGLASS WITH SEALING
JACKET AND FITTING COVERS

GLYCOL

GLYCOL 50-50 MIX PROPYLENE GLYCOL

GLYCOL OR FUEL OIL PIPING HANGERS

PROVIDE ROD AND CLEVIS HANGERS. PROVIDE UNISTRUT ON
CEILING SPANNING 2 FRAMING SUPPORTS MINIMUM.
PROVIDE RIGID INSULATION AND INSULATION SHIELDS AT HANGERS
PROVIDE UNISTRUT WALL HANGERS AS REQUIRED. SPAN 2 JOISTS MINIMUM
HANGER SPACING AND SWAY BRACING PER NFPA 13
PROVIDE UNISTRUT CUSH A CLAMPS FOR PUMP PIPING AREAS TO ALLOW FOR
PIPE EXPANSION AND TO REDUCE PIPE STRAIN.

FUEL OIL SUPPLY PIPING MATERIAL

FUEL OIL PIPING SHALL BE LOW TEMP SCH 80 BLACK STEEL A333 BLACK STEEL
WITH SOCKET WELD FITTINGS
VALVES SHALL BE BRASS FULL PORT BALL-TYPE WITH NPT CONNECTIONS
MFG: HAMMOND OR EQUAL RATED 400 PSI WOG
OF-1 OIL FILTER. INLINE TYPE WITH SPIN-ON CARTRIDGE. MFG CIM-TEK 50181 ADAPTER 3/4"NPT
SPIN ON FILTER ELEMENT: CIM-TEK 200 SERIES SPIN ON OR EQUAL

FUEL OIL PIPING ACCESSORIES

TL TIGER LOOP AIR ELIMINATOR (1 PER BOILER)
MFG: WESTWOOD PRODUCTS INC TIGERLOOP ULTRA OR EQUAL
FUSIBLE VALVES: FIROMATIC OR EQUAL
CHECK VALVES: FIROMATIC OR EQUAL
FF-1 FUEL FILTER: GAR-BER 11BV-MK (CARTRIDGE GF 2615) OR EQUAL (1 PER BOILER)

GLYCOL/FUEL OIL PIPING GENERAL NOTES

PROVIDE UNIONS OR FLANGES FOR SERVICE AND REPLACEMENT OF EQUIPMENT
CLEAN AND DRY ALL PIPING BEFORE PUTTING INTO SERVICE
MATERIALS AND ACCESSORIES SHALL BE AS SHOWN OR EQUAL,

BOILER INSTALLATION ACCESSORIES

PROVIDE 16 GA GALVANIZED SHEET METAL DRIP PANS UNDER
OIL BURNERS, OIL FILTERS. VALVES AND TIGER LOOPS
BOILER STACKS: SELKIRK METALBESTOS TYPE "PS"
STACK WITH TYPE 304 STAINLESS STEEL INNER AND
OUTER PIPES. VERIFY SIZES

SEISMIC RESTRAINTS

PROVIDE CODE APPROVED WALL STRAPS FOR HOT WATER MAKERS AND HYDROPNEUMATIC TANKS
SWAY BRACE HANGING PIPING PER NFPA 13
PROVIDE GALVANIZED STEEL BASES LAGGED TO FLOOR AND BOLTED TO PUMPS FOR BASE
MOUNTED PUMPS. BASES MAY BE FORMED OR WELDED CONSTUCTION

HVAC DUCT WORK

ALL MATERIAL, SEALING, AND HANGERS TO BE PER IMC AND SMACNA STANDARDS
USE ROD AND CLEVIS OR TRAPESE HANGERS IN OPEN CEILING AREAS
FLEX JOINTS AT INLINE FANS FOR VIBRATION REDUCTION
SQUARE DUCTS: DURO DYNA JR DUROLON CONNECTOR
ROUND DUCTS AT FANS AND DRYER VENTS: VENDOR: HOSECRAFT TD-1 WITH SS WORM OR CLAMPS
SEE EQUIPMENT LIST FOR BALANCING DAMPERS

DRYER VENT ACCESS DOORS

AD-2: DUCT ACCESS DOOR 8 INCH MFG: NAILOR MODEL 890 10 X 7

AD-4: DUCT ACCESS DOOR 6 X 6 INCH MFG: NAILOR MODEL 08SH 6 X 6

GRILLES AND REGISTERS

SG-1 SUPPLY GRILLE: BAR GRILL WITH HORIZONTAL BARS 14 X 10 MFG: SHOEMAKER 901-NO OBD
RG-1 RETURN GRILLE: BAR GRILL WITH HORIZONTAL BARS 10 X 10 MFG: SHOEMAKER 905 NO OBD
RG-2 RETURN GRILLE: BAR GRILL WITH HORIZONTAL BARS 10 X 6 MFG: SHOEMAKER 905 NO OBD
RG-3 RETURN GRILLE: 14 W X 20 H FILTER GRILLE MFG: SHOEMAKER 915 NO OBD
TG-1 RETURN GRILLE: BAR GRILL WITH HORIZONTAL BARS 10 X 4 MFG: SHOEMAKER 905 NO OBD

AIR FILTERS

SF-1 SUMMER FILTERS: 2 EA 20 X 25 X 1 ALUMINUM PERMANENT WASHABLE FILTER:
MFG: AAF 316-001-800 OR EQUAL
SF-2, SF-3 SUMMER AIR FILTER: 1 EA 10 X 20 X 1 ALUMINUM PERMANENT WASHABLE FILTER:
MFG: AAF 316-001-200 OR EQUAL
AF-1 AIR FILTER: 1 EA 14 X 20 X 1 FIBERGLASS DISPOSABLE FILTER:
MFG: AAF OR EQUAL

HVAC DUCT INSULATION

AIR INTAKE DUCTS WHERE SHOWN AND AS NEEDED: 2 INCH RIGID GLASS WITH FSK COVER

CAPSTONE ENGINEERING LLC
MECHANICAL ENGINEERS
12110 BUSINESS BLVD. STE 6 PMB 169
EAGLE RIVER, ALASKA 99577
TELEPHONE & TEXT MSG 907-414-1456

STATE OF ALASKA
AUG 23, 2016

PIPING AND GENERAL MATERIALS
CHEFORNAK WASHETERIA
CHEFORNAK, ALASKA

DATE: AUGUST 23, 2016
DRAWN: F.H. BELZ
CHKD:
SCALE: AS NOTED
REVISED:
JOB NO. C389

SHEET NO. M-1.4
5 OF 21

CONTROL VALVES

CV-1 THRU CV-13 CONTROL VALVE: 1/4 TURN MOTOR OPERATED VALVE 3/4 INCH NPT BRASS BODY
SS BALL, SPRING RETURN 24 VAC ACTUATOR (FAIL CLOSED) MFG: HONEYWELL VB2F 1350 OR EQUAL

CV-14 CONTROL VALVE: 1/4 TURN MOTOR OPERATED VALVE 1' INCH NPT BRASS BODY
SS BALL, SPRING RETURN 24 VAC ACTUATOR (FAIL CLOSED) MFG: HONEYWELL VB2F 1350 OR EQUAL

CV-15 CONTROL VALVE: 3 WAY VALVE-MIXING SERVICE: CV=15, FNPT BRASS BODY, 24 VAC 0-10 VDC SIGNAL
MFG: HONEYWELL V5013N1063/U VALVE WITH HONEYWELL ML7425 OPERATOR. STEM UP ON POWER FAILURE

MOTORIZED DAMPERS-SEE DAMPER SCHEDULE M-1.2 FOR DETAILS

THERMOSTATS
TH-1, TH-2, TH-3, TH-4, TH-5, TH-6, TH-7, TH-13 WALL THERMOSTATS-LINE VOLTAGE STAT
MFG: HONEYWELL T4051A W/LOCKING COVER,
TH-8, TH-9, TH-10, TH-11, TH-12: THERMOSTAT- LINE/LOW VOLTAGE ADJ DIFF MFG: HONEYWELL T631B1005 OR EQUAL

TEMPERATURE CONTROLLERS
TC-1, TC-2 TEMPERATURE CONTROL . IMMERSION TYPE STAT WITH
ADJUSTIBLE SET POINT 100 TO 240 F RANGE MFG: HONEYWELL L4006A2007 OR EQUAL
TC-3 TEMPERATURE CONTROL . IMMERSION TYPE STAT WITH
ADJUSTIBLE SET POINT 40 TO 180 F RANGE MFG: HONEYWELL L4006A1959 WITH THERMOWELL OR EQUAL
TC-4, TC-7, TEMPERATURE CONTROL . BULB TYPE REMOTE BULB, 20 FT CAPILLARY 0-100F, 2 SPDT
3-10 F ADJUSTIBLE DIFF MFG: HONEYWELL T678A1015 OR EQUAL
TC-6, TEMPERATURE CONTROL . BULB TYPE REMOTE BULB, 10 FT CAPILLARY 80 F TO 220 F, 1 SPDT
3-10 DIFFERENTIAL ADJUSTIBLE SET POINT MFG: HONEYWELL T675F1032 OR EQUAL

MULTIPLE BOILER CONTROLLER
BCP-1 BOILER CONTROL PANEL: SEQUENCES B-1,B-2, AND B-3 BASED ON RETURN AND SUPPLY TEMPERATURE.
MFG: HONEYWELL T775P2003 OR APPROVED EQUAL

MULTIPLE UNIT HEATER CONTROLLER
UHTC-1 UNIT HEATER CONTROL PANEL: SEQUENCES UH-1, UH-2, UH-3 BASED ON ROOM AND OSA TEMPERATURE.
MFG: HONEYWELL T775P2003 OR APPROVED EQUAL

HEAT TRACE CONTROLLER
HTTC-1 HEAT TRACE CONTROLLER: STARTS AND STOPS PMP-8 AND RESET CONTROLS CV-17 WHILE SENSING
OUTSIDE AIR TEMP AND HEAT TRACE LOOP TEMP MFG: HONEYWELL T775R2027/U OR APPROVED EQUAL

SEQUENCE OF OPERATION-- BOILER SYSTEMS
BOILER SYSTEM #1
BOILER SYSTEM #1 BOILER B-1, PUMPS PMP-1A & PMP-1B, HC-1, HC-2, HC-3, CV-3, CV-4, CV-5
BOILER OPERATES CONTINUOUSLY ON TC-6 CONTROL: SET 200 ON/ 210 OFF PMP-1A OR PMP-1B OPERATES CONTINUOUSLY
CV-3, CV-4 , CV-5 CYCLE WHEN ASSOCIATED DRYERS OPERATE DURING LAUNDRY OCCUPIED MODE
CV-3, CV-4 , CV-5 ARE DISABLED DURING LAUNDRY UNOCCUPIED MODE

BOILER SYSTEM #2
BOILER SYSTEM #2 BOILER B-2, B-3,B-4, PUMPS PMP-2A & PMP-2B, PHC-1, PHC-2, PHC-3, BUILDING HEAT, TANK HEAT, WATER HEAT, HEAT TRACE
BOILERS OPERATES CONTINUOUSLY CONTROLLED BY BCP-1, SET 180 F. PMP-2A OR PMP-2B OPERATES CONTINUOUSLY MAINTAINING HEAD
CV-6, CV-7 , CV-8 CYCLE WHEN ASSOCIATED DRYERS OPERATE DURING LAUNDRY OCCUPIED MODE
CV-6, CV-7 , CV-8 ARE DISABLED DURING LAUNDRY UNOCCUPIED MODE
UNIT HEATERS UH-1, UH-2, UH-3 OPERATE FROM UHTC DURING LAUNDRY OCCUPIED MODE
UNIT HEATERS UH-1, UH-2, UH-3 ARE DISABLED DURING LAUNDRY UNOCCUPIED MODE
UNIT HEATERS UH-4, UH-5, UH-6, UH-7, UH-8, UH-9, UH-10, UH-11: (COIL FLOW CONTINUOUS) LINE VOLTAGE ROOM THERMOSTATS CYCLE THE FANS.
TANK UTILADOR HEAT TRACE: CV-12, TC-2 REMOTE BULB TSTAT: TSTAT CYCLES CV-12 AS NEEDED
HOT WATER MAKER HWM-1: HWM-1, TC-1, CV-10: TC-1 CYCLES CV-10 TO MAINTAIN TANK TEMPERATURE @ 115 F
UNDERFLOOR-UTILADOR- HEAT TRACING: HTCP CONTROLS CV-15 AND PMP-8 TO TAKE HEAT FROM BOILER LOOP. SEE CONTROL DIAGRAM
WATER TANK HEATING: HWM-2:, TC-2, TC-3, CV-11, PMP-4, TC-3 STARTS/STOPS PMP-4A OR PMP-4B TO MAINTAIN TANK TEMPERATURE 45 F MIN
ADJUSTIBLE TC-2 CYCLES CV-11 TO MAINTAN HWM-2 TANK TEMPERATURE 100 F. PMP-4A AND PMP-4B MANUAL CHANGEOVER
POWER HOUSE ADD HEAT TO BOILER SYSTEM: HX-2, PMP-3: TMP CONTROLS PMP-3 TO EFFECT HEAT ADD TO HEATING LOOP
BOILER ROOM FAN OPERATION: BRF-1, B-1,B-2, B-3, B-4: BOILER ROOM FAN OPERATES WHEN ANY BOILER FIRES
BOILER ROOM FAN ALSO OPERATES WHEN BOILER ROOM COOLING TSTAT (TH-11) CLOSES (SET 80 F CLOSE, 75 F OPEN)

CONTROLS(CONTINUED)
T-1 TRANSFORMER 120 VAC TO 24 VAC 150 VA FOOT MOUNTED TRANSFORMER
MFG: ALLIED 6K149 OR EQUAL. REQUIRES FUSED OR CIRCUIT BREAKER ON SECONDARY
T-2 THROUGH T-7, T-11, T-12 TRANSFORMER 115 VAC TO 24 VAC 40 VA PLATE MOUNTED
MFG: HONEYWELL AT72D-1188/U OR EQUAL.
T-8, T-9, T-10 TRANSFORMER 115 VAC TO 24 VAC 75 VA FOOT MOUNTED
MFG: HONEYWELL AT88 OR EQUAL.

CR-1 CONTROL RELAY: DPDT RELAY, 12 AMP@ 120 VAC POWER DUTY RATED CONTACTS
WITH MAX 25 VA PILOT DUTY @ 24 VAC MFG: HONEYWELL R8222D1029 OR EQUAL

CR-2 CONTROL RELAY: SPDT RELAY, 16.0 AMPS@ 120 VAC POWER DUTY
24 VAC COIL, BOX OR WALL MOUNTED, TOTALLY ENCLOSED. MFG: WHITE RODGERS 8A0-1 OR EQUAL

CSR-1 CURRENT SENSING RELAY: SPST RELAY FOR SWITCHING 24 VAC RELAY OR VALVE
BOX MOUNTED, TOTALLY ENCLOSED. MFG: HONEYWELL 32001754 OR EQUAL

LVCB-1 CIRCUIT BREAKER 10 AMP: 10 AMP RATED @ 24 VAC MFG: CARLING 4VA76 OR EQUAL

TS-1 TOGGLE SWITCH: 10 AMP RATED @ 120 VAC LIGHTED ROCKER MFG: GRAINGER 2VLN1 OR EQ

CB-1 CIRCUIT BREAKER 10 AMP RATED @ 24 VAC MFG: GRAINGER 4VA76 OR EQ

TMP TMP IS A THERMAL MANAGEMENT PANEL DEVELOPED BY AVEC TO DEVELOP A 0-10 VDC
TO CONTROL A VARIABLE SPEED PUMP USING MULTIPLE INPUTS FROM TEMPERATURE ELEMENTS

SEQUENCE OF OPERATION-- EF-2, EF-3, MD-3 LAUNDRY ROOM-EQUIPMENT ROOM COOLING
EQUIPMENT ROOM COOLING EF-3 RUNS & MD-3 OPENS ON MAKE OF TH-8 COOLING STAT SET 80F
LAUNDRY ROOM COOLING: EF-2 RUNS ON MAKE OF TH-9 COOLING STAT SET 80 F ADJ

SEQUENCE OF OPERATION--LAUNDRY AREA VENTILATION MUF-1, EF-1, MD-2
ON-OFF SWITCH IN OFFICE CONTROLS VENTILATION CONTROL PANEL
SWITCH ON: MUF-1 OPERATES, MD-2 OPENS AND EF-1 OPERATES
SWITCH OFF: MUF-1 STOPS, MD-2 CLOSES AND EF-1 STOPS

SEQUENCE OF OPERATION-- LAUNDRY OCCUPIED/UNOCCUPIED MODES
SEE M-1.6, M-1.9 FOR CONTROL DIAGRAMS

OCCUPIED MODE
PHC-1, PHC-2, PHC-3 VALVE OPERATION IS ENABLED
HC-1, HC-2, HC-3 VALVE OPERATION IS ENABLED
MD-1 IS OPEN
UH-1, UH-2, UH-3 MOTOR OPERATION OF UHTC IS ENABLED

UNOCCUPIED MODE
PHC-1, PHC-2, PHC-3 VALVE OPERATION IS DISABLED
HC-1, HC-2, HC-3 VALVE OPERATION IS DISABLED
MD-1 IS CLOSED
UH-1, UH-2, UH-3 MOTOR OPERATION OR UHTC IS ENABLED

SEQUENCE OF OPERATION PMP-7 COLD WATER SUPPLY CIRCULATOR PUMP
PMP-7 OPERATES CONTINUOUSLY

SEQUENCE OF OPERATION: DRYERS: EACH OF 3 DRYERS HAS 2 TUMBLE DRYERS
DRYER STARTS: INDIVIDUAL DRYER COILS (PHC) PREHEAT COILS AND (HC) COILS
ARE CONTROLLED BY DRYER CONTROLS- INTERLOCKED. COIL VOLTAGE IS 24 VAC

CAPSTONE ENGINEERING LLC
MECHANICAL ENGINEERS
12110 BUSINESS BLVD. STE 6 PMB 169
EAGLE RIVER, ALASKA 99577
TELEPHONE & TEXT NBR 907-414-1456

STATE OF ALASKA
Frederick H. Belz
FREDERICK H. BELZ
NE 6696
REGISTERED PROFESSIONAL ENGINEER
AUG 23, 2016

CONTROLS AND SEQUENCE OF OPERATION
CHEFORNAK WASHETERIA
CHEFORNAK, ALASKA

DATE: AUGUST 23, 2016
DRAWN: F.H. BELZ
CHKD:
SCALE: AS NOTED
REVISED:
JOB NO. C389

SHEET NO. M-1.5
6 OF 21

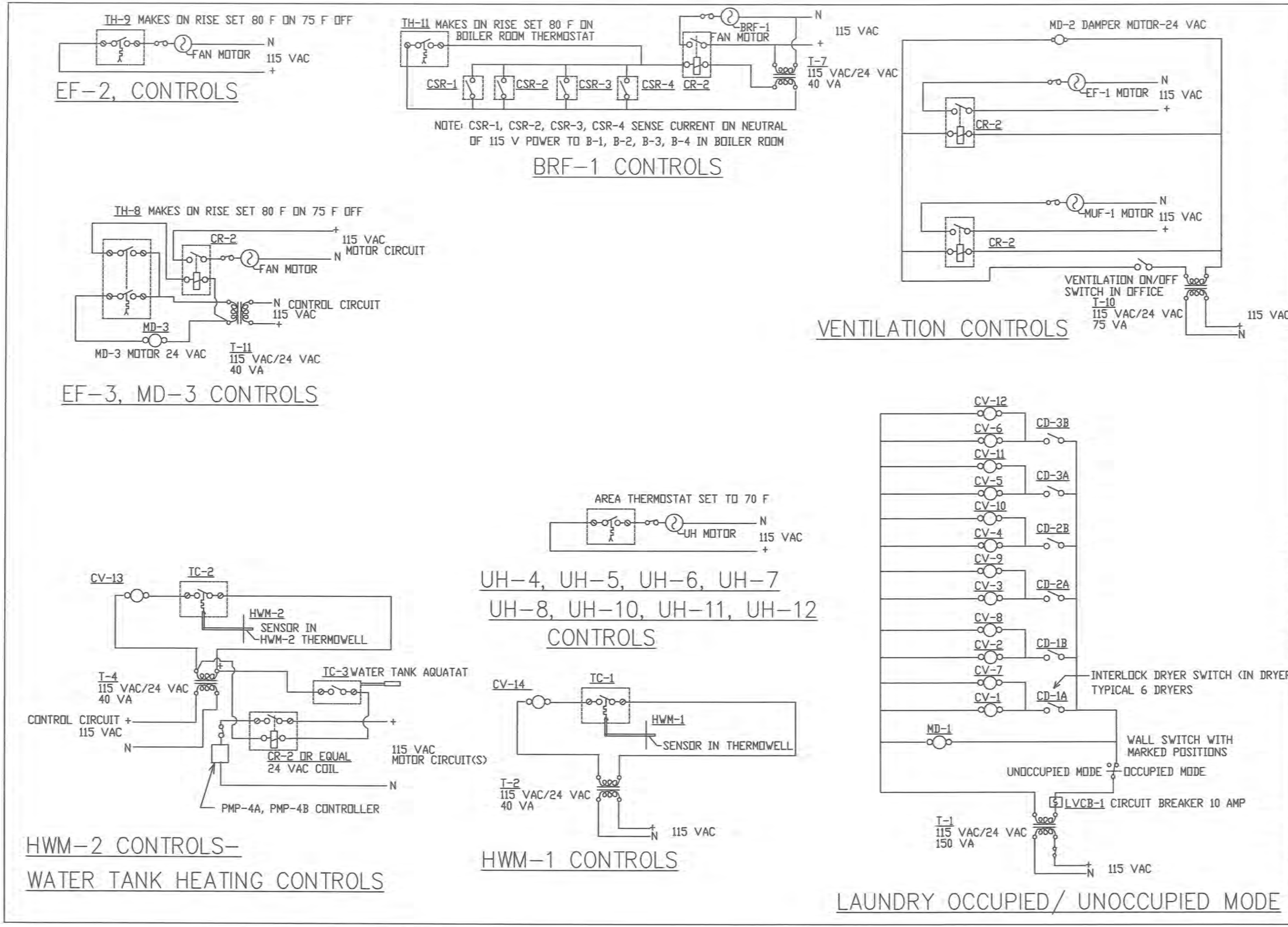

CAPSTONE ENGINEERING LLC
MECHANICAL ENGINEERS
12110 BUSINESS BLVD STE 6 PMB 169
EAGLE RIVER, ALASKA 99577
TELEPHONE & TEXT MSG 907-414-1456

STATE OF ALASKA
ANDERSON H. BELZ
ME 6698
REGISTERED PROFESSIONAL ENGINEER

AUG 23, 2016

CONTROL DIAGRAMS
CHEFORNAK WASHETERIA
CHEFORNAK, ALASKA

DATE: AUGUST 23, 2016
DRAWN: F.H. BELZ
CHKD:
SCALE: AS NOTED
REVISED:
JOB NO. C389

SHEET NO. M-1.6
7 OF 21

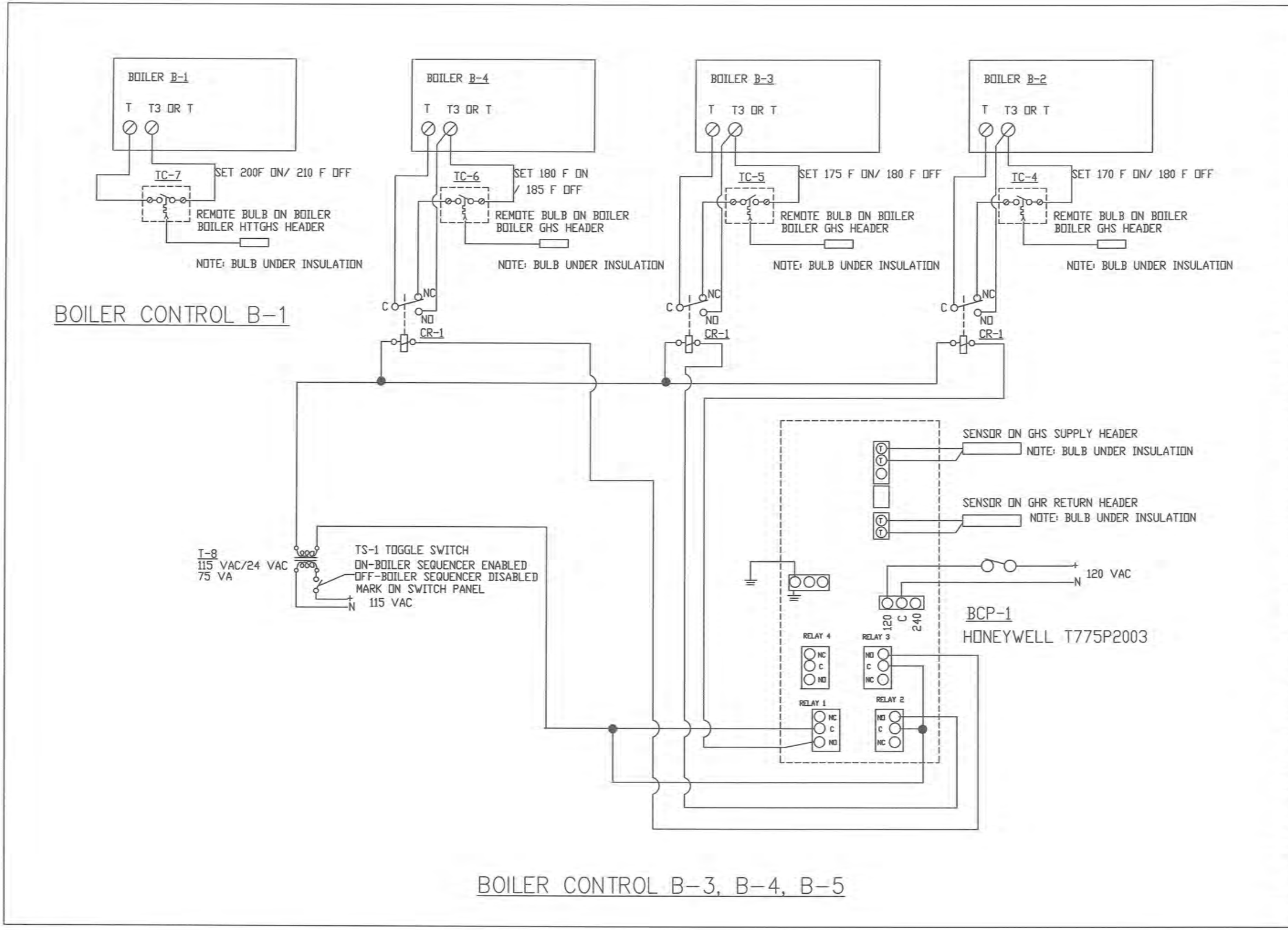

CAPSTONE ENGINEERING LLC
MECHANICAL ENGINEERS
12110 BUSINESS BLVD STE 6 PMB 169
EAGLE RIVER, ALASKA 99577
TELEPHONE & TEXT MSG 907-414-1456

STATE OF ALASKA
REGISTERED PROFESSIONAL ENGINEER
AUG 23, 2016

BOILER B-1, B-2, B-3, B-4 CONTROL DIAGRAM
CHEFORNAK WASHETERIA
CHEFORNAK, ALASKA

DATE: AUGUST 23, 2016
DRAWN: F.H. BELZ
CHKD:
SCALE: AS NOTED
REVISED:
JOB NO. C389

SHEET NO. M-1.7
8 OF 21

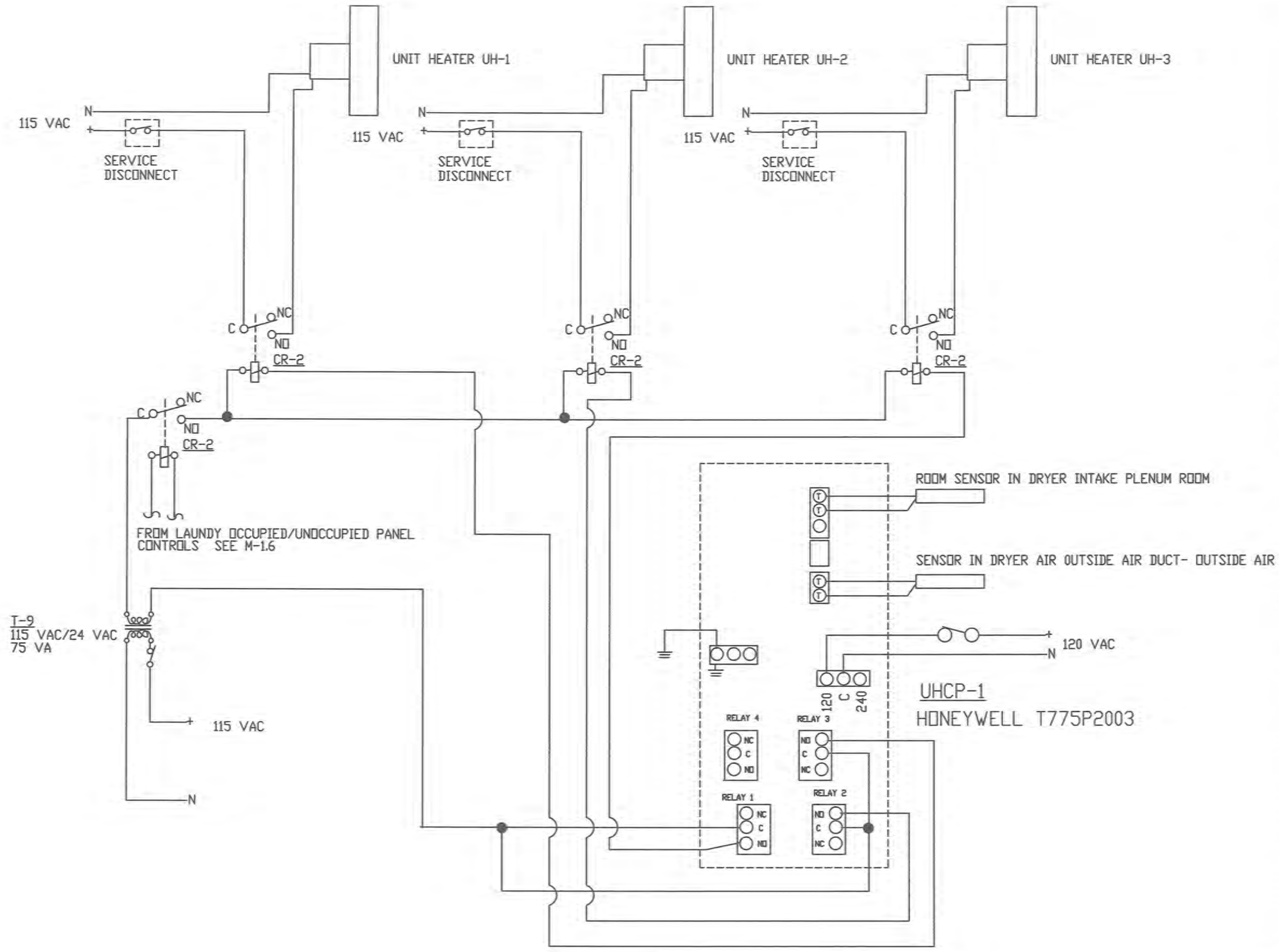

UNIT HEATER UH-1, UH-2, UH-3 CONTROL

CAPSTONE ENGINEERING LLC
MECHANICAL ENGINEERS
12110 BUSINESS BLVD STE 6 PMB 169
EAGLE RIVER, ALASKA 99577
TELEPHONE & TEXT MSG 907-414-1456

STATE OF ALASKA
4 OCT 16
FREDERICK H. BELZ
NE 6698
REGISTERED PROFESSIONAL ENGINEER

AUG 23, 2016

UNIT HEATER UH-1, UH-2, UH-3 CONTROLS
CHEFORNAK WASHETERIA
CHEFORNAK, ALASKA

DATE: AUGUST 23, 2016
DRAWN: F.H. BELZ
CHKD:
SCALE: AS NOTED
REVISED:
JOB NO. C389

SHEET NO. M-1.8
9 OF 21

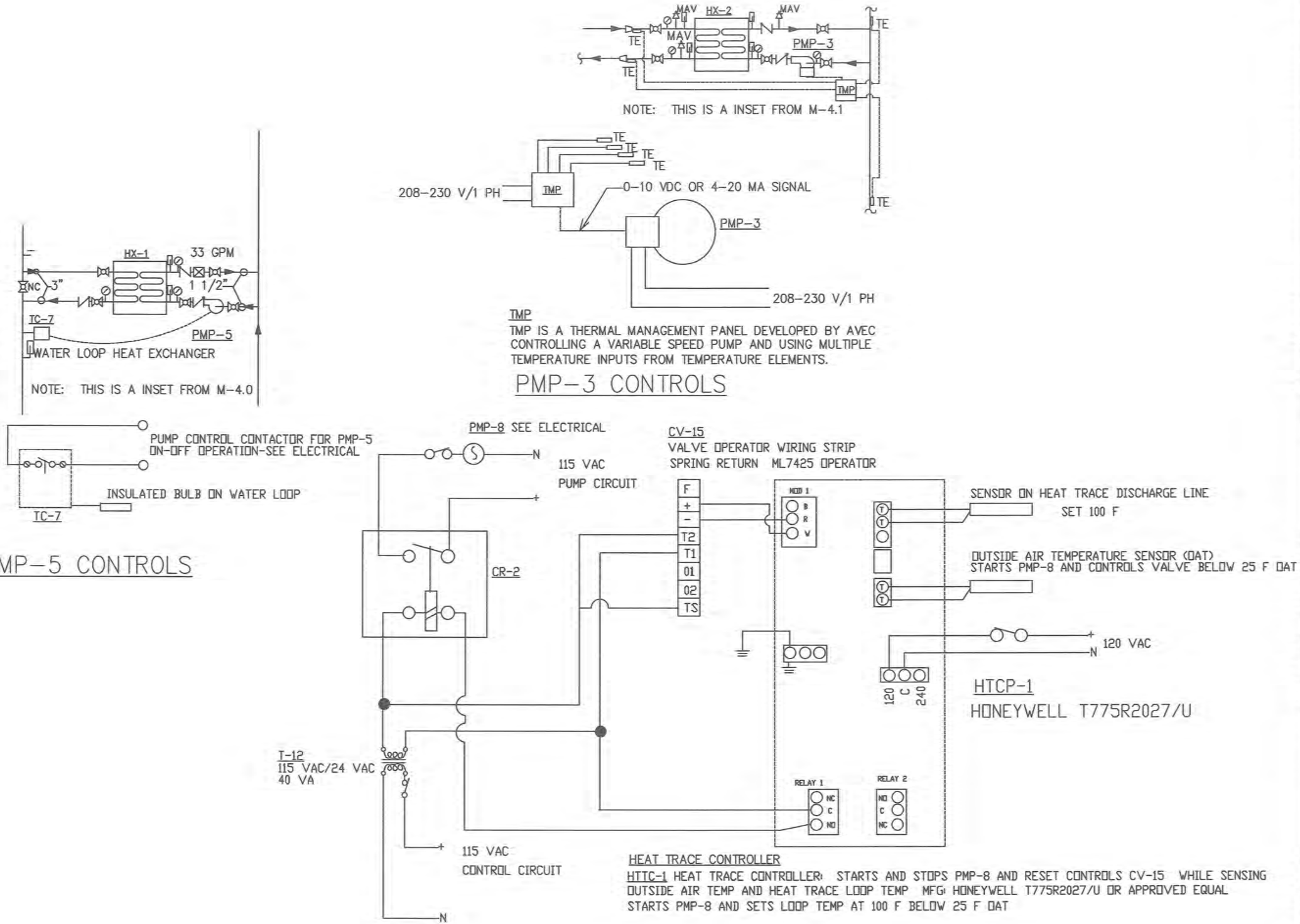

PMP-8, UTILADOR HEAT TRACE CONTROLS

CAPSTONE ENGINEERING LLC
MECHANICAL ENGINEERS
12110 BUSINESS BLVD STE 6 PMB 169
EAGLE RIVER, ALASKA 99577
TELEPHONE & TEXT MSG 907-414-1456

STATE OF ALASKA
49TH
REGISTERED PROFESSIONAL ENGINEER
AUG 23, 2016

CONTROL DIAGRAMS
CHEFORNAK WASHETERIA
CHEFORNAK, ALASKA

DATE: AUGUST 23, 2016
DRAWN: F.H. BELZ
CHKD:
SCALE: AS NOTED
REVISED:
JOB NO. C389

SHEET NO. M-1.9
10 OF 21

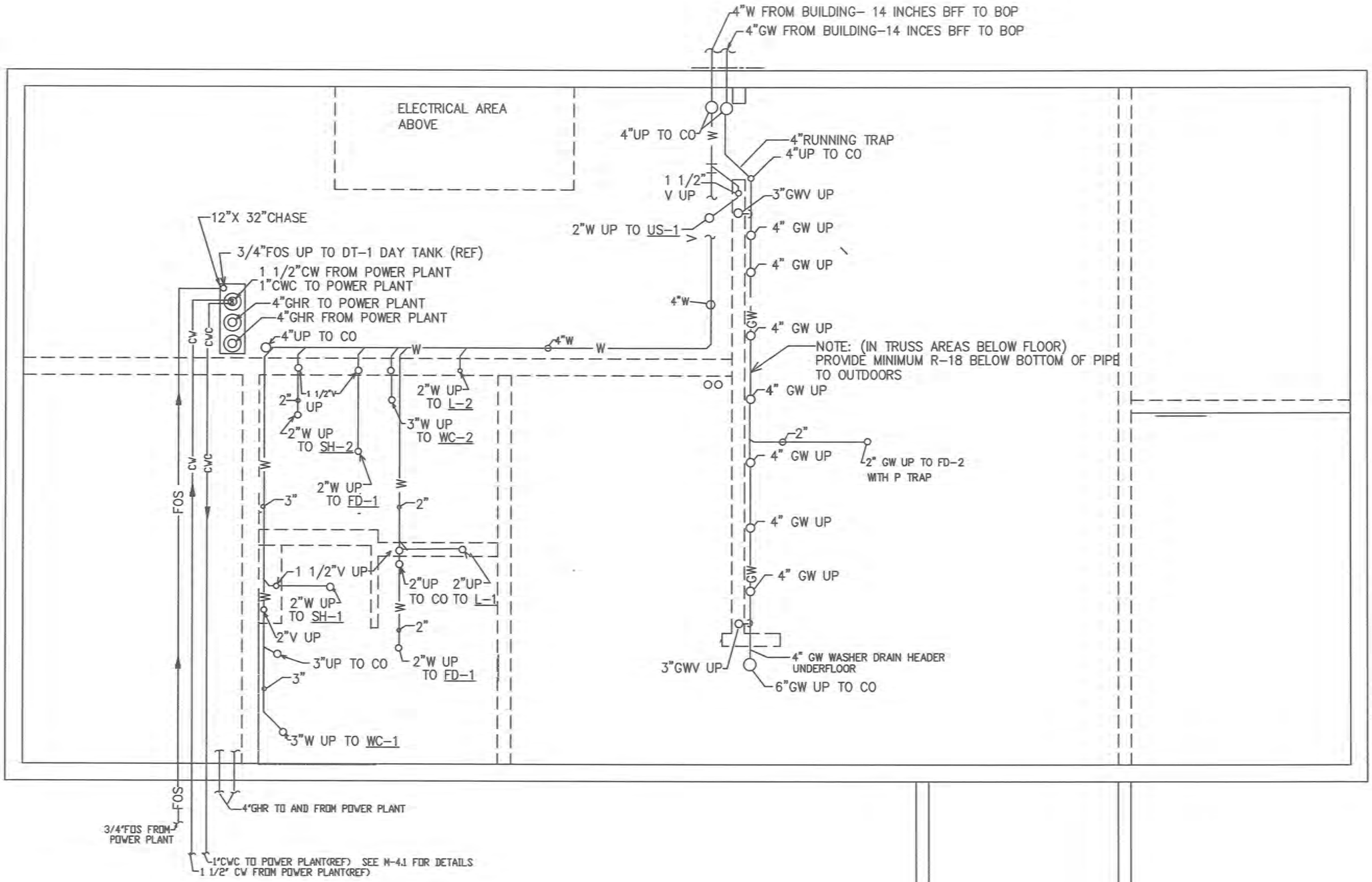

CHEFORNAK WASHETERIA UNDER FLOOR PLUMBING PLAN

SCALE 1/4"=1'-0"

CAPSTONE ENGINEERING LLC
MECHANICAL ENGINEERS
12110 BUSINESS BLVD STE 6 PMB 169
EAGLE RIVER, ALASKA 99577
TELEPHONE & TEXT MSG 907-414-1456

STATE OF ALASKA
AUG 23, 2016

UNDERFLOOR PLUMBING PLAN
CHEFORNAK WASHETERIA
CHEFORNAK, ALASKA

DATE: AUGUST 23, 2016
DRAWN: F.H. BELZ
CHKD:
SCALE: AS NOTED
REVISED:
JOB NO. C389

SHEET NO. M-2.0
11 OF 21

NOTE: STRAP HT-1, HWM-1, HWM-2 TO WALL PER CODE FOR SEISMIC
NOTE: SEE M4.0, M4.1, M2.5 FOR DETAILS

ST-1, ST-2 SHOWER TIMER SYSTEMS
LOCATE TOKEN SLIDE BOX AT SHOWER ENTRY.
LOCATE SHV-1 IN WATER SUPPLY TO SHOWER HEAD BEHIND AD-1 (2 SYSTEMS)
LOCATE TIMER METER AND TRANSFORMER IN ELECTRICAL AREA
ROUTE LOW VOLTAGE CABLES TO SHOWER AREAS

CHEFORNAK WASHETERIA PLUMBING PLAN

SCALE 1/4"=1'-0"

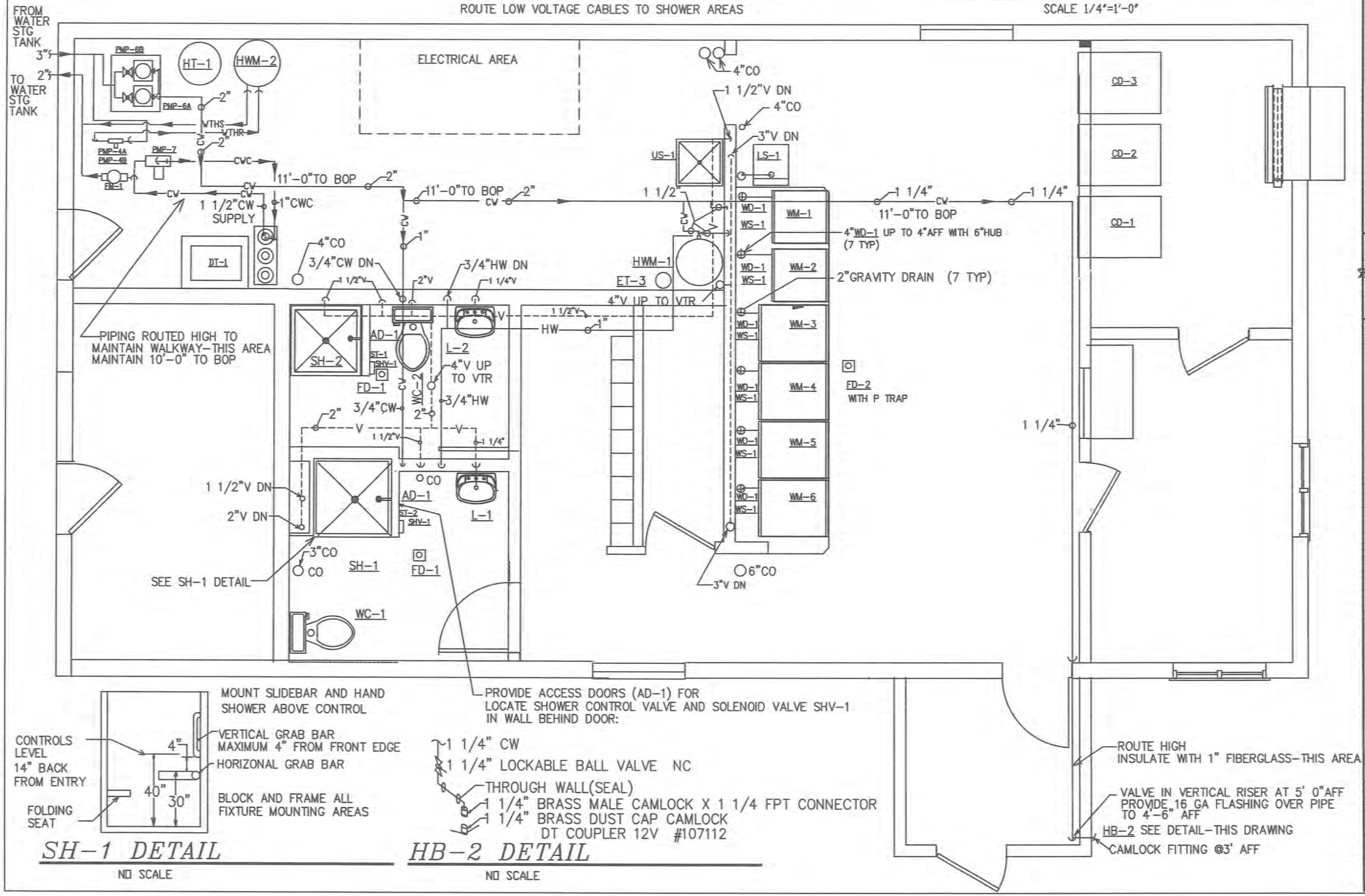

SH-1 DETAIL

NO SCALE

HB-2 DETAIL

NO SCALE

CAPSTONE ENGINEERING LLC
MECHANICAL ENGINEERS
1210 BUSINESS BLVD STE 6 PMB 169
EAGLE RIVER, ALASKA 99577
TELEPHONE & TEXT MSG 907-414-1456

STATE OF ALASKA
49TH
FREDERICK H. BELZ
NE 6650
REGISTERED PROFESSIONAL ENGINEER

AUG 23, 2016

PLUMBING PLAN
CHEFORNAK WASHETERIA
CHEFORNAK, ALASKA

DATE: AUGUST 23, 2016
DRAWN: F.H. BELZ
CHKD:
SCALE: AS NOTED
REVISED:
JOB NO. C389

SHEET NO. M-2.1
12 OF 21

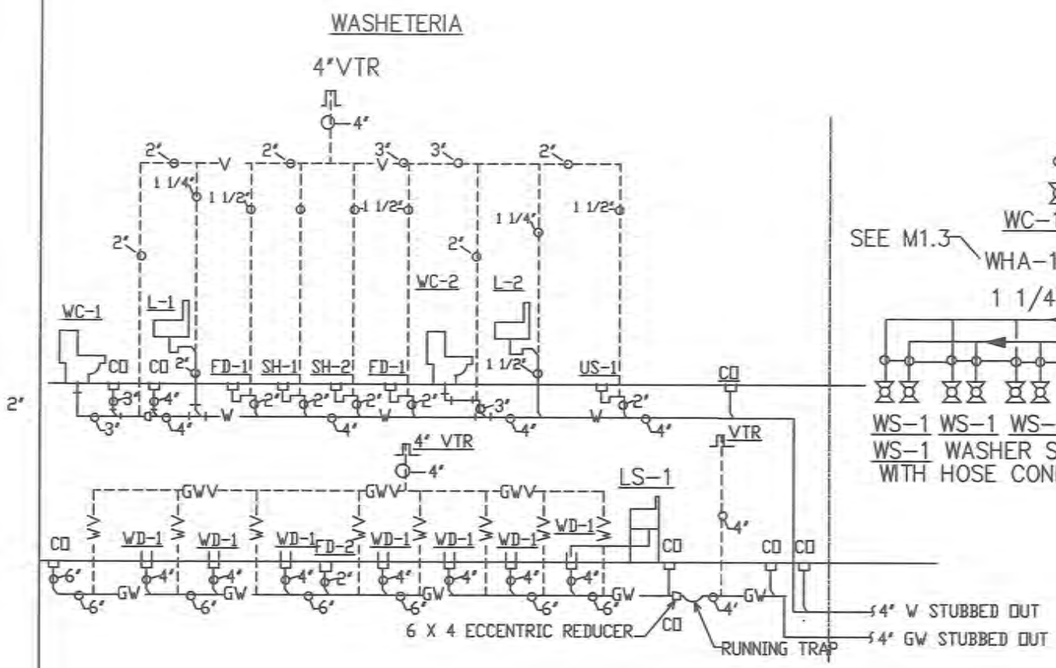

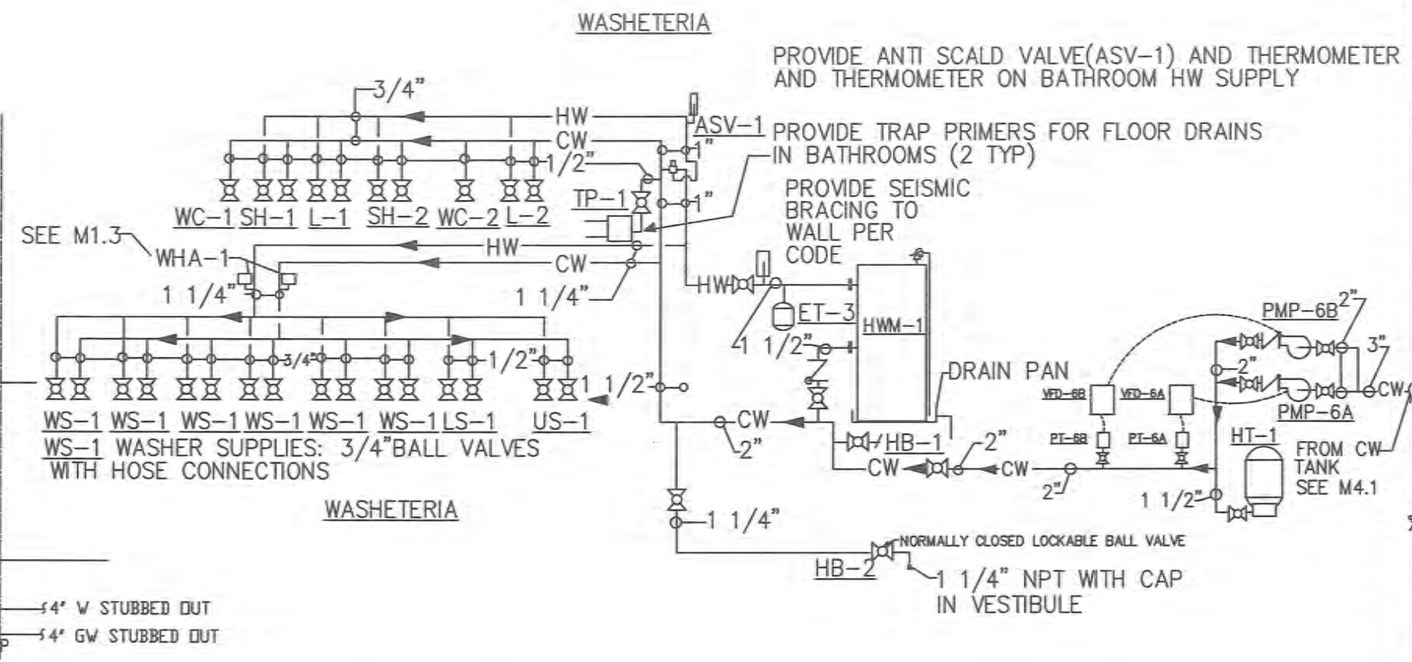

CHEFORNAK WASHETERIA WATER DIAGRAM

NO SCALE

CHEFORNAK WASHETERIA WASTE AND VENT DIAGRAM

NO SCALE

PLUMBING FIXTURE CONNECTION SCHEDULE					
FIXTURE	WASTE	VENT	CW	HW	DESCRIPTION
LS-1	2"IND	1 1/2"	1/2"	1/2"	FLOOR MOUNT LAUNDRY SINK
L-1	1 1/2"	1 1/4"	1/2"	1/2"	LAVITORY
L-2	1 1/2"	1 1/4"	1/2"	1/2"	LAVITORY
WC-1	3"	2"	1/2"		WATER CLOSET-FLUSH TANK
WC-2	3"	2"	1/2"		WATER CLOSET-FLUSH TANK
FD-1	2"	1 1/2"			FLOOR DRAIN-WOOD FLOOR TYPE
FD-2	2"IND				FLOOR DRAIN-WOOD FLOOR TYPE
HB-1			1/2"		1/4 TURN BALL VALVE TYPE 06-13-2016
HB-2			1 1/4"		1/4 TURN LOCKABLE BALL VALVE TYPE
WS-1			3/4"	3/4"	WASHER WATER SUPPLY-USE BALL VALVES
ET-3				3/4"	EXPANSION TANK
WD-1	4"IND				WASHER DRAIN
SH-1	2"	1 1/2"	1/2"	1/2"	SHOWER-HANDICAP
SH-2	2"	1 1/2"	1/2"	1/2"	SHOWER
US-1	2"	1 1/2"	1/2"	1/2"	UTILITY SINK

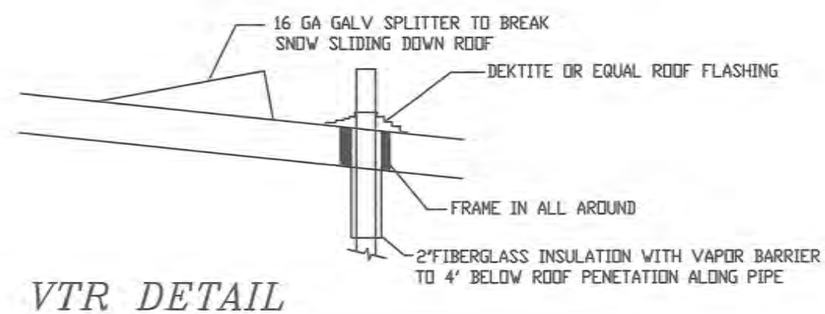

VTR DETAIL

NO SCALE

CAPSTONE ENGINEERING LLC
MECHANICAL ENGINEERS
12110 BUSINESS BLVD STE 6 PMB 169
EAGLE RIVER, ALASKA 99577
TELEPHONE & TEXT MSG 907-414-1456

STATE OF ALASKA
49TH
FREDERICK H. BELZ
NE 6698
REGISTERED PROFESSIONAL ENGINEER

AUG 23, 2016

PLUMBING DIAGRAMS AND DETAILS
CHEFORNAK WASHETERIA
CHEFORNAK, ALASKA

DATE: AUG 23, 2016
DRAWN: F.H. BELZ
CHKD:
SCALE: AS NOTED
REVISED:
JOB NO. C389

SHEET NO. M-2.5
13 OF 21

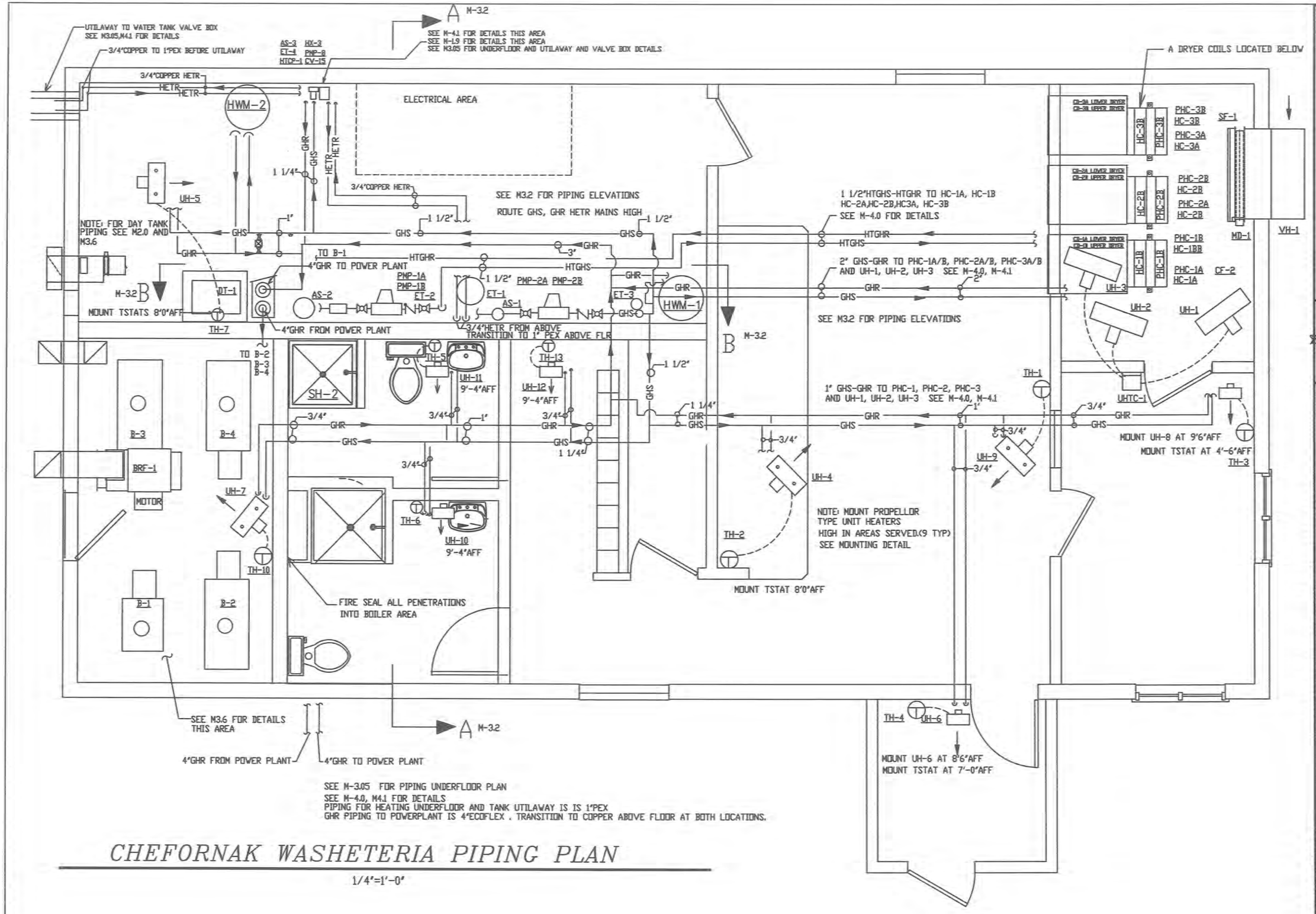

CHEFORNAK WASHETERIA PIPING PLAN

1/4"=1'-0"

CAPSTONE ENGINEERING LLC
MECHANICAL ENGINEERS
12110 BUSINESS BLVD STE 6 PMB 169
EAGLE RIVER, ALASKA 99577
TELEPHONE & TEXT MSG 907-414-1456

STATE OF ALASKA
49TH
FREDERICK H BELZ
ME 6698
REGISTERED PROFESSIONAL ENGINEER

AUG 23, 2016

MECHANICAL PLAN-PIPING
CHEFORNAK WASHETERIA
CHEFORNAK, ALASKA

DATE: AUGUST 23, 2016
DRAWN: F.H. BELZ
CHKD:
SCALE: AS NOTED
REVISED:
JOB NO. C389

SHEET NO. M-3.0
14 OF 21

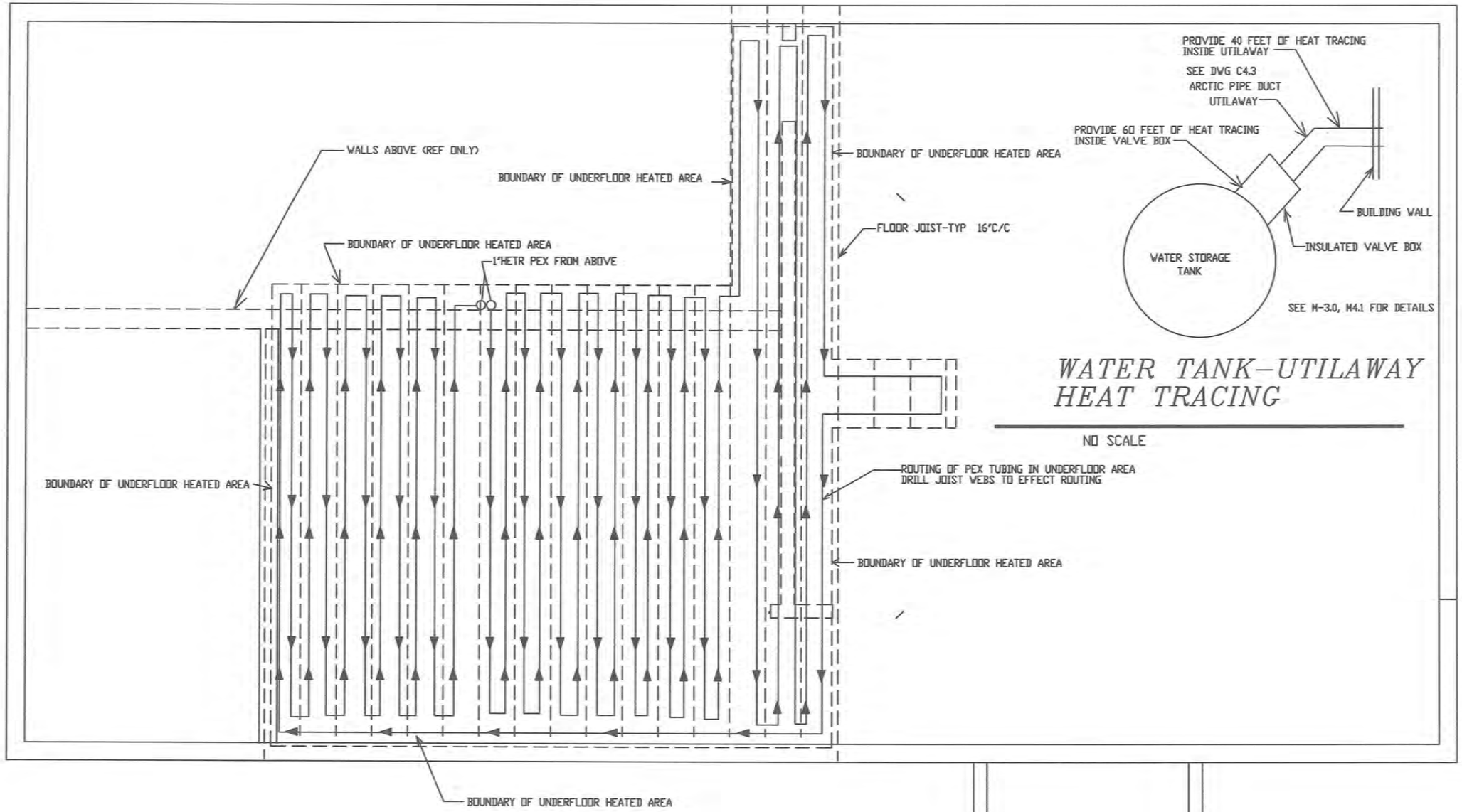

CHEFORNAK WASHETERIA UNDERFLOOR-UTILAWAY HEATING PLAN

1/4"=1'-0"

WATER TANK-UTILAWAY HEAT TRACING

NO SCALE

CAPSTONE ENGINEERING LLC
MECHANICAL ENGINEERS
18110 BUSINESS BLVD STE 6 PMB 169
EAGLE RIVER, ALASKA 99577
TELEPHONE & TEXT MSG 907-414-1456

STATE OF ALASKA
FRANCIS H. BELZ
REGISTERED
ME 6098
REGISTERED PROFESSIONAL ENGINEER

AUG 23, 2016

UNDERFLOOR-UTILAWAY HEAT TRACING
CHEFORNAK WASHETERIA
CHEFORNAK, ALASKA

DATE:	AUGUST 23, 2016
DRAWN:	F.H. BELZ
CHKD:	
SCALE:	AS NOTED
REVISED:	
JOB NO.	C389
SHEET NO.	M-3.05
	15 OF 21

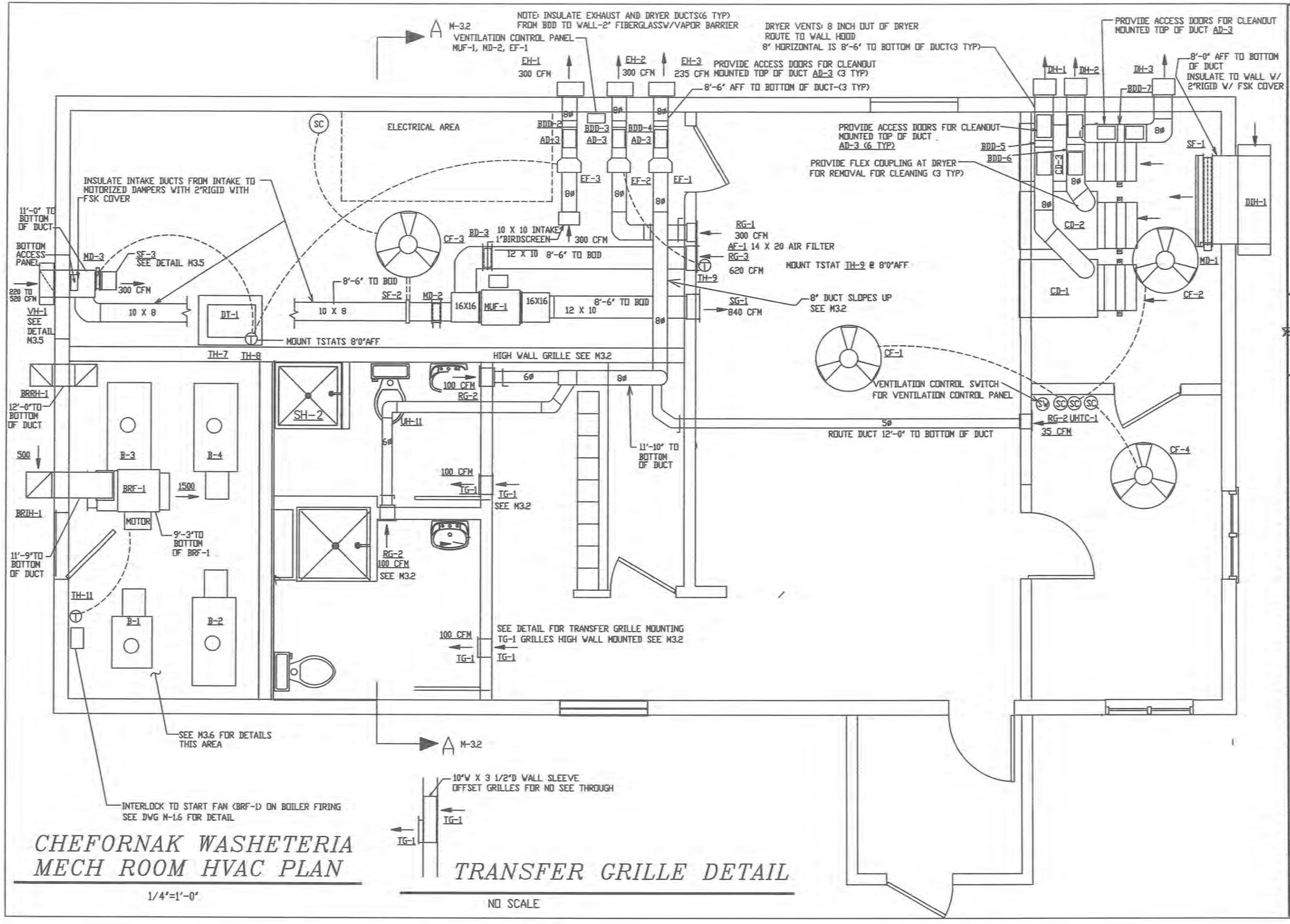

CHEFORNAK WASHETERIA
MECH ROOM HVAC PLAN

1/4"=1'-0"

TRANSFER GRILLE DETAIL

NO SCALE

CAPSTONE ENGINEERING LLC
MECHANICAL ENGINEERS
1210 BUSINESS BLVD STE 6 PMB 169
EAGLE RIVER, ALASKA 99577
TELEPHONE & TEXT MSG 907-414-1456

STATE OF ALASKA
49TH
FREDERICK H. BELZ
NE 6698
REGISTERED PROFESSIONAL ENGINEER

AUG 23, 2016

MECHANICAL PLAN-HVAC
CHEFORNAK WASHETERIA
CHEFORNAK, ALASKA

DATE: AUGUST 23, 2016
DRAWN: F.H. BELZ
CHKD:
SCALE: AS NOTED
REVISED:
JOB NO. C389

SHEET NO. M-3.1

16 OF 20

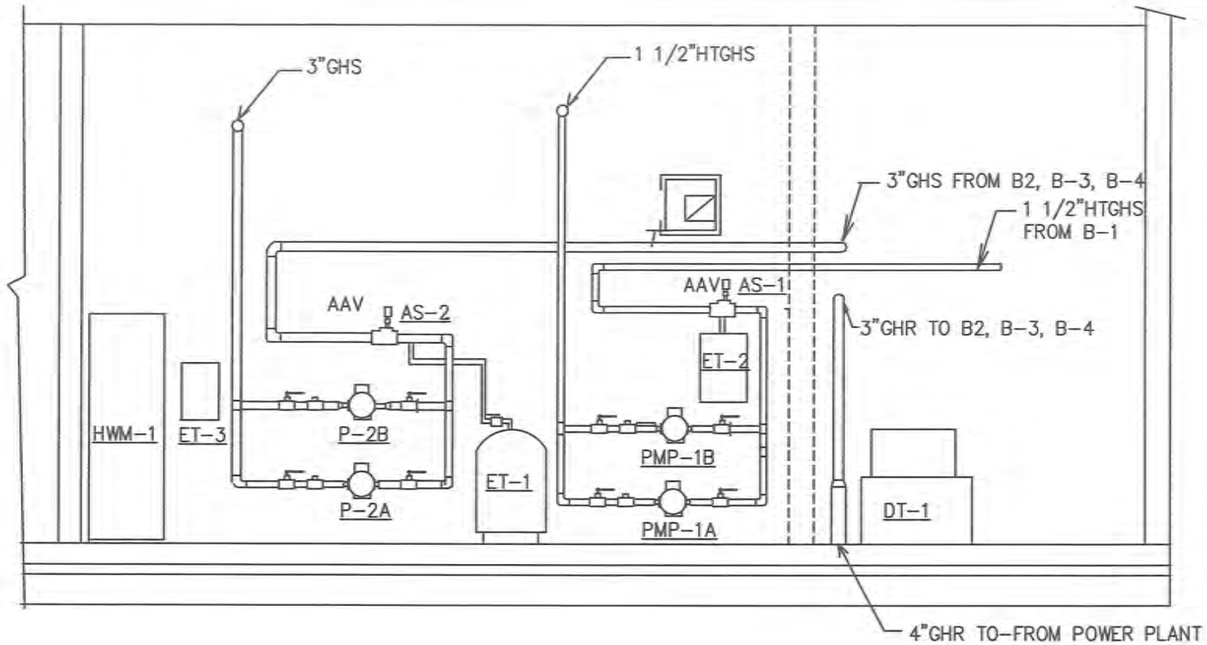

CHEFORNAK WASHETERIA MECH SECTION B-B

1/4"=1'-0"

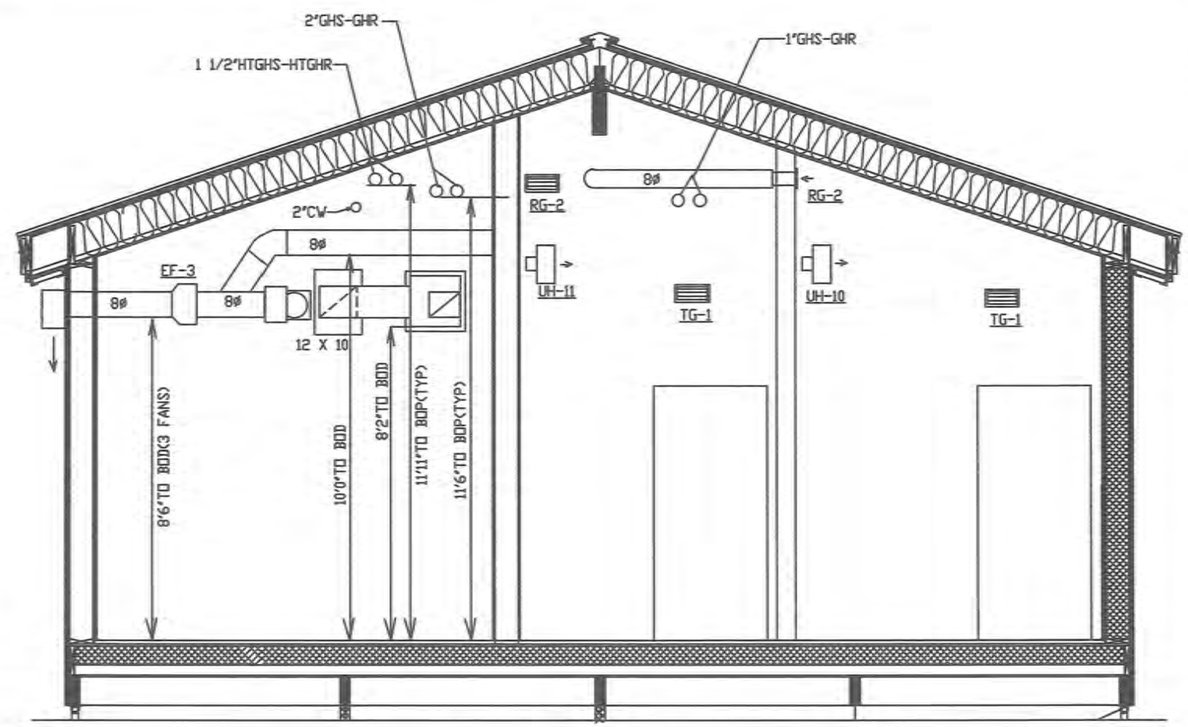

CHEFORNAK WASHETERIA MECH SECTION A-A

1/4"=1'-0"

CAPSTONE ENGINEERING LLC
MECHANICAL ENGINEERS
12110 BUSINESS BLVD STE 6 PMB 169
EAGLE RIVER, ALASKA 99577
TELEPHONE & TEXT MSG 907-414-1456

STATE OF ALASKA
AUG 23, 2016

MECHANICAL SECTIONS-DETAILS
CHEFORNAK WASHETERIA
CHEFORNAK, ALASKA

DATE:	AUGUST 23, 2016
DRAWN:	F.H. BELZ
CHKD:	
SCALE:	AS NOTED
REVISED:	
JOB NO.	C389
SHEET NO.	M-3.2
	17 OF 21

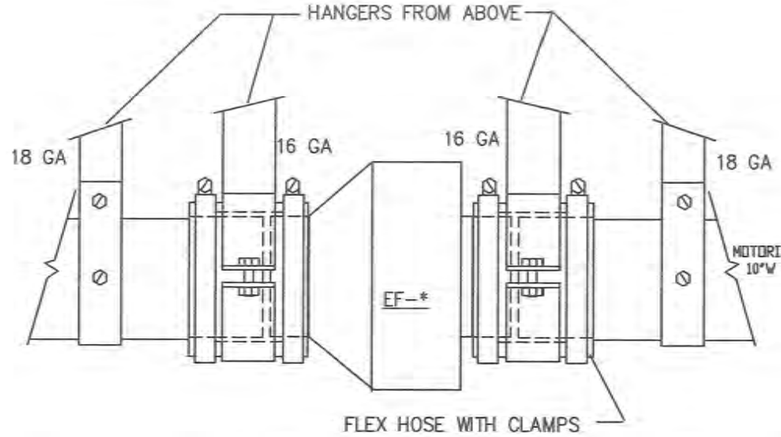

EF-1, EF-2, EF-3 DETAIL

NO SCALE

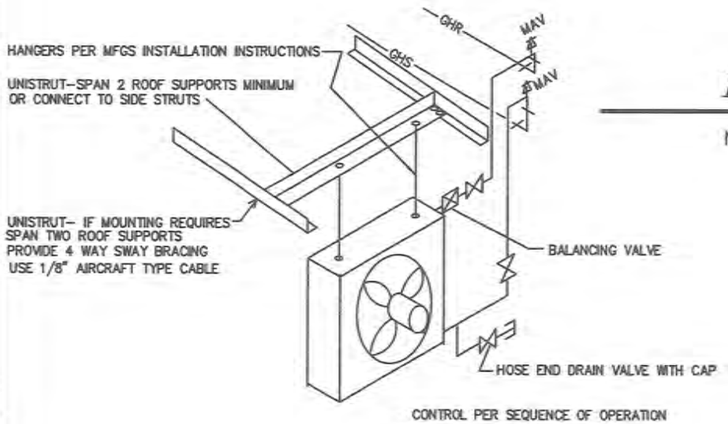

TYPICAL UNIT HEATER MOUNTING DETAIL

NO SCALE

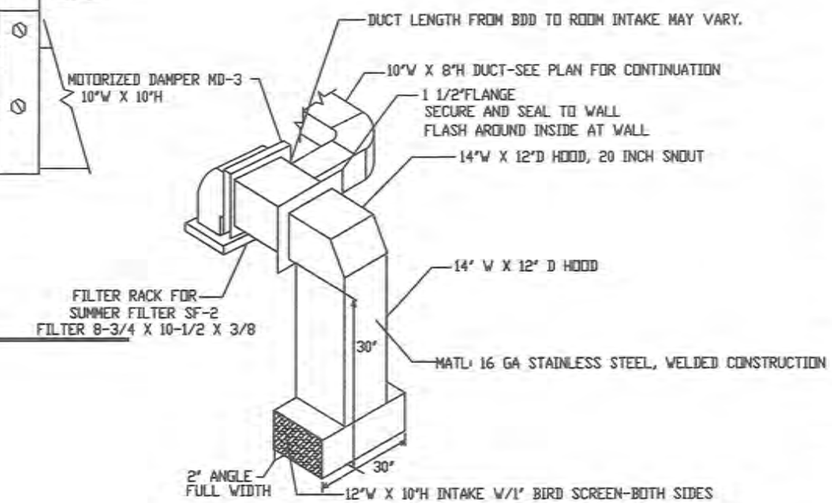

VH-1 INTAKE HOOD

NO SCALE

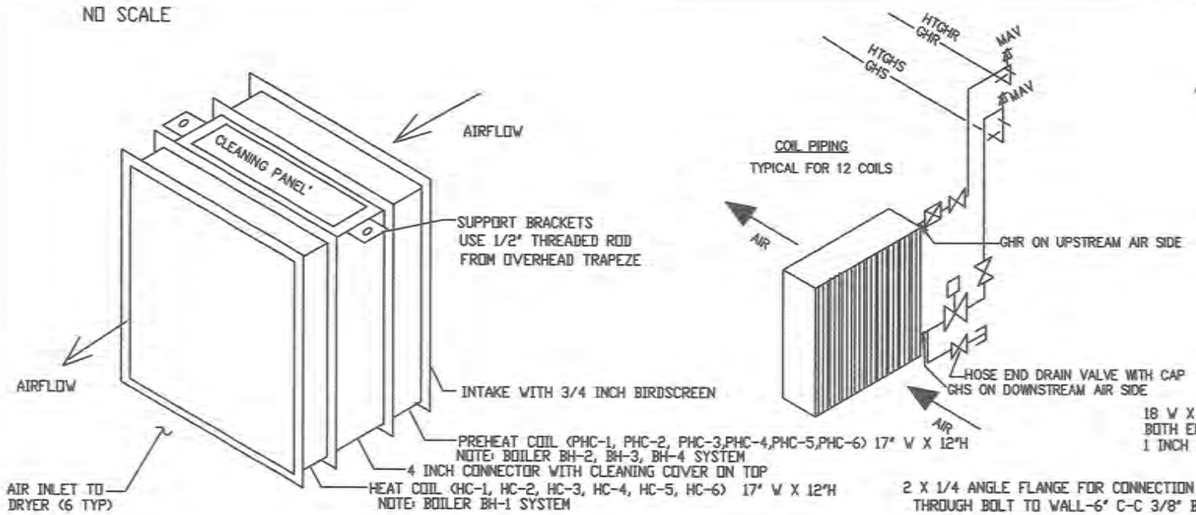

DRYER HEAT COILS- PHC AND HC

NO SCALE

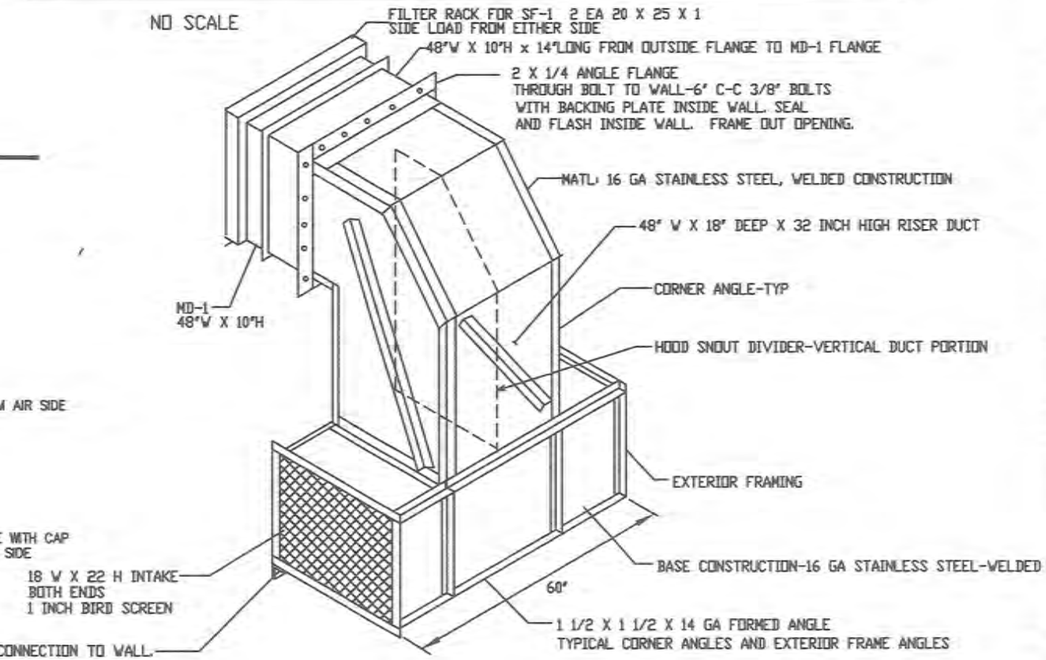

DIH-1 INTAKE HOOD DETAIL

NO SCALE

CAPSTONE ENGINEERING LLC
MECHANICAL ENGINEERS
12110 BUSINESS BLVD STE 6 PMB 169
EAGLE RIVER, ALASKA 99577
TELEPHONE & TEXT MSG 907-414-1456

STATE OF ALASKA
ENDERICK H BELZ
NE 6698
REGISTERED PROFESSIONAL ENGINEER

AUG 23, 2016

HVAC AND HEATING DETAILS
CHEFORNAK WASHETERIA
CHEFORNAK, ALASKA

DATE: AUGUST 23, 2016
DRAWN: F.H. BELZ
CHKD:
SCALE: AS NOTED
REVISED:
JOB NO. C389

SHEET NO. M-3.5
18 OF 21

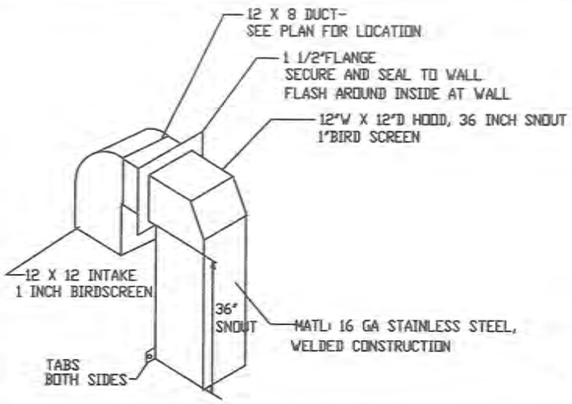

BOILER ROOM RELIEF HOOD BRRH-1

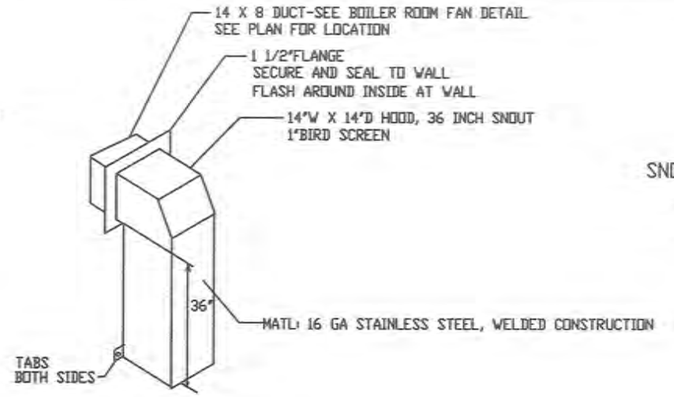

BOILER ROOM INTAKE HOOD BRIH-1

BOILER ROOM HOODS

NO SCALE

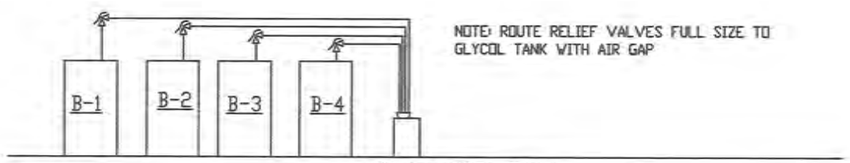

BOILER RELIEF VALVE PIPING

NO SCALE

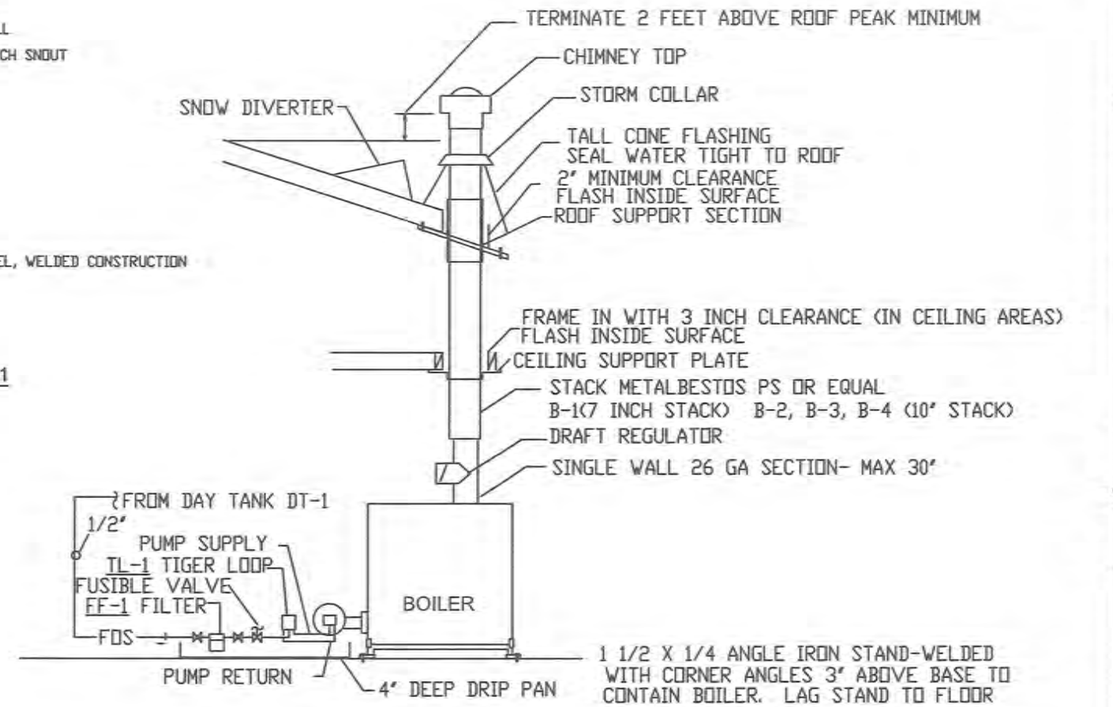

BOILER FUEL OIL & STACK DETAIL (4 TYP)

NO SCALE

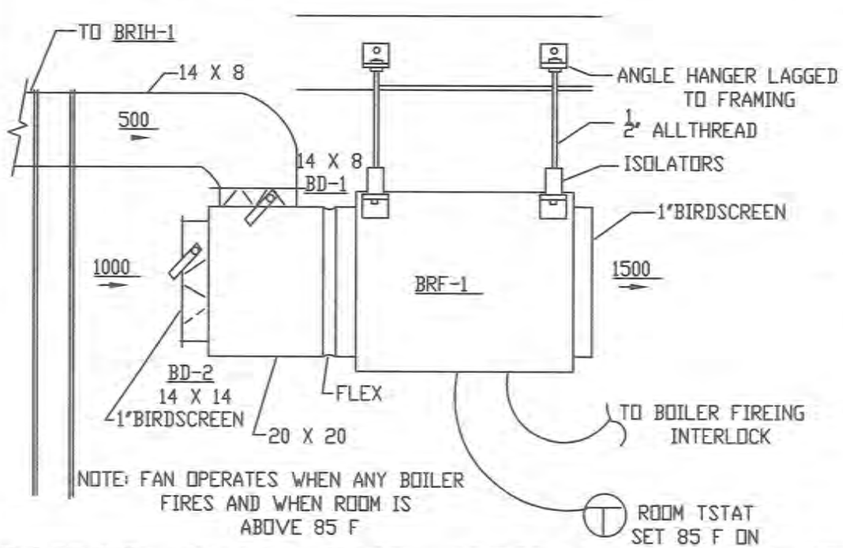

BOILER ROOM FAN BRF-1

NO SCALE

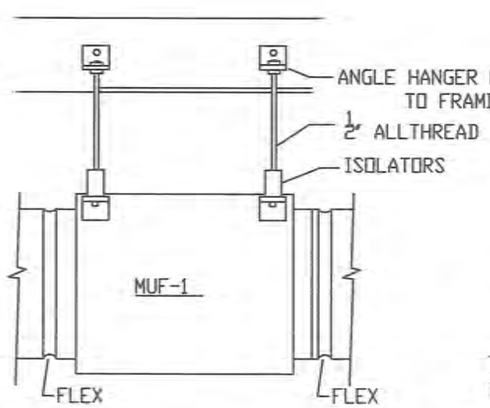

MUF-1 MOUNTING DETAIL

NO SCALE

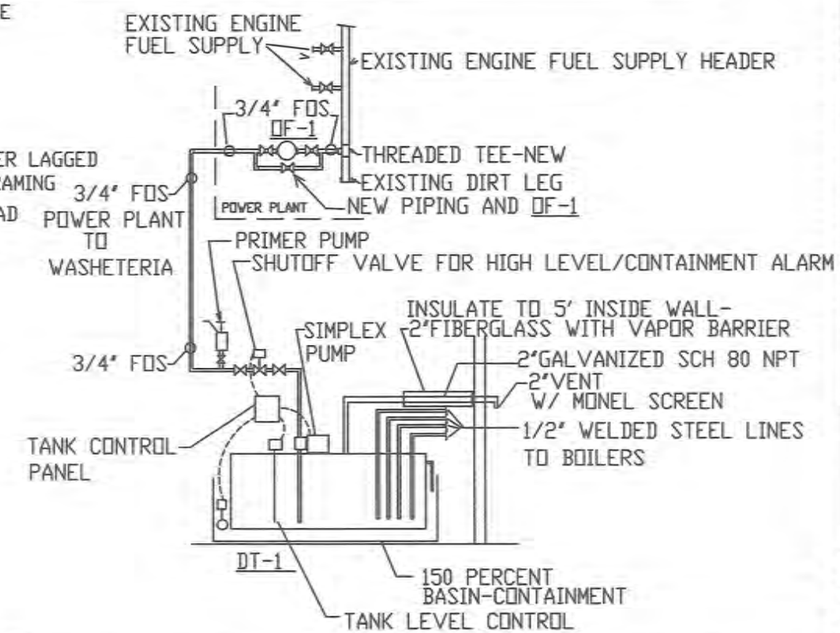

DAY TANK PIPING DIAGRAM

NO SCALE

95% REVIEW—NOT FOR CONSTRUCTION

CAPSTONE ENGINEERING LLC
MECHANICAL ENGINEERS
12110 BUSINESS BLVD STE 6 PMB 169
EAGLE RIVER, ALASKA 99577
TELEPHONE & TEXT MSG 907-414-1456

STATE OF ALASKA
FRANCIS H. BELZ
ME 6639
REGISTERED PROFESSIONAL ENGINEER

AUG 23, 2016

MECHANICAL DETAILS
CHEFORNAK WASHETERIA
CHEFORNAK, ALASKA

DATE: AUGUST 23, 2016
DRAWN: F.H. BELZ
CHKD:
SCALE: AS NOTED
REVISED:
JOB NO. C369

SHEET NO. M-3.6
19 OF 21

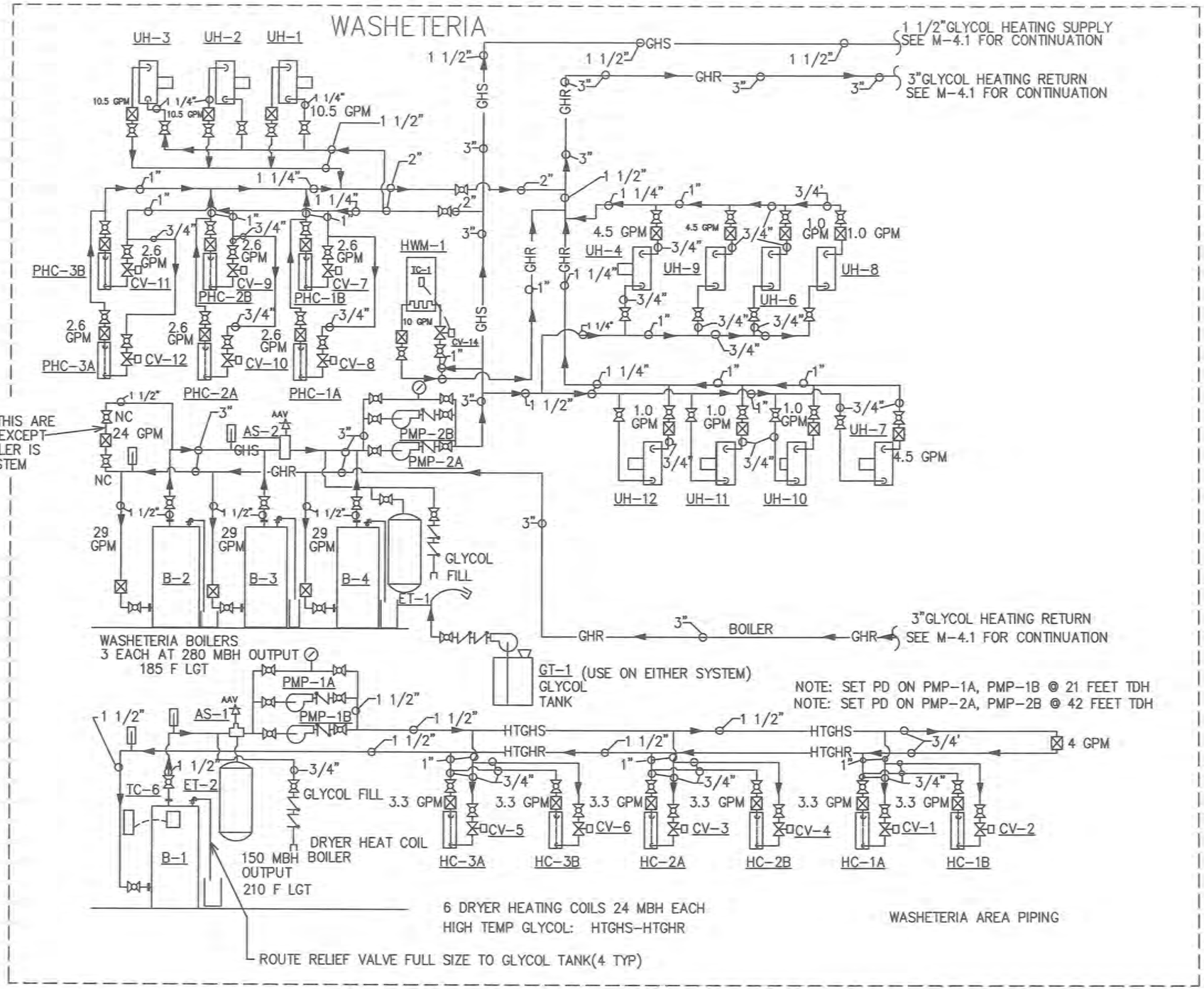

CHEFORNAK WASHETERIA HEATING AND WATER SUPPLY DIAGRAM #1

CAPSTONE ENGINEERING LLC
MECHANICAL ENGINEERS
12110 BUSINESS BLVD STE 6 PMB 169
EAGLE RIVER, ALASKA 99577
TELEPHONE & TEXT MSG 907-414-1456

STATE OF ALASKA
4 CITY
PROFESSIONAL ENGINEER
AUG 23, 2016

HEATING AND WATER SUPPLY DIAGRAM #1
CHEFORNAK WASHETERIA
CHEFORNAK, ALASKA

DATE: AUGUST 23, 2016
DRAWN: F.H. BELZ
CHKD:
SCALE: AS NOTED
REVISED:
JOB NO. C389

SHEET NO. M-4.0
20 OF 21

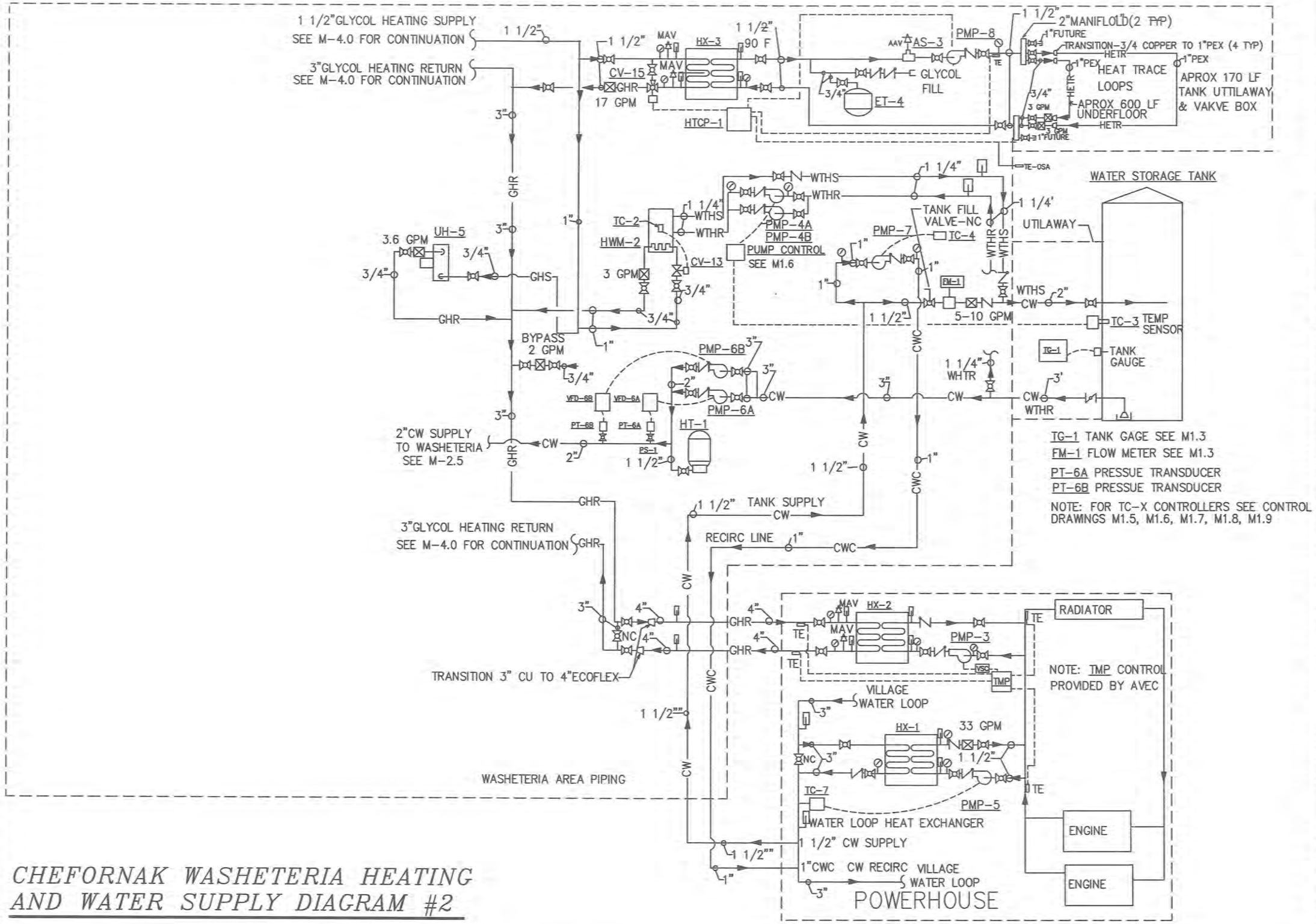

CHEFORNAK WASHETERIA HEATING AND WATER SUPPLY DIAGRAM #2

CAPSTONE ENGINEERING LLC
MECHANICAL ENGINEERS
12110 BUSINESS BLVD STE 6 PMB 169
EAGLE RIVER, ALASKA 99577
TELEPHONE & FAX 541-884-8065

STATE OF ALASKA
REGISTERED PROFESSIONAL ENGINEER
AUG 23, 2016

HEATING AND WATER SUPPLY DIAGRAM #2
CHEFORNAK WASHETERIA
CHEFORNAK, ALASKA

DATE: AUGUST 23, 2016
DRAWN: F.H. BELZ
CHKD:
SCALE: AS NOTED
REVISED:
JOB NO. C389

SHEET NO. M-4.1
21 OF 21

ELECTRICAL LEGEND

(NOTE: THIS IS A STANDARD LEGEND AND NOT ALL SYMBOLS ARE NECESSARILY USED.)

- EXTERIOR LIGHT FIXTURE, POLE MOUNTED, HEADS AS SHOWN
- PHOTOCELL CONTROL
- LUMINAIRE - TYPE AS NOTED ON PLAN. INNER PARALLEL LINES REPRESENT REFLECTOR ORIENTATION.
- LUMINAIRE - WALL MOUNTED: TYPE AS NOTED ON PLAN
- LUMINAIRE - EMERGENCY LIGHT
- TRACK LIGHTING - TRACK LENGTH AS SCALED: TYPE AS NOTED ON PLAN
- EMERGENCY LIGHTING UNIT (WALL; CEILING; REMOTE HEAD)
- EXIT SIGN (CEILING OR WALL - SEE MODEL NUMBER); SHADE DENOTES FACE; ARROWS AS INDICATED
- COMBINATION EMERGENCY UNIT & EXIT SIGN (CEILING OR WALL - SEE MODEL NUMBER); SHADE DENOTES FACE; ARROWS AS INDICATED
- OCCUPANCY SENSOR LIGHTING CONTROL
- SWITCH - SINGLE POLE, SINGLE THROW, UON
- SWITCH LEGEND
  3 (THREE WAY); 4 (FOUR WAY); L (LOW VOLTAGE); D (DIMMER); K (KEYED); P (PILOT LIGHT); V (VARIABLE SPEED CONTROL); OC (OCCUPANCY SENSOR); T (INTEGRAL MOTOR OVERLOAD [WHERE FHP MOTOR REQUIRES AUTOMATIC CONTROL PROVIDE MOTOR RATED "RELAY IN BOX"])
- POWER DISTRIBUTION PANELBOARD
- METERING DEVICE
- POWER PANELBOARD
- TRANSFORMER: APPROX. PHYSICAL SIZE AS SCALED; ACTUAL RATING AS NOTED ON ONE-LINE DIAGRAMS
- MOTOR CONNECTION
- COMBINATION BATHROOM FAN/LIGHT: TYPE AS NOTED ON PLAN
- NON-FUSED SAFETY SWITCH / DISCONNECT
- FUSED SAFETY SWITCH / DISCONNECT
- ENCLOSED CIRCUIT BREAKER SWITCH
- MOTOR STARTER
- COMBINATION MOTOR STARTER SAFETY SWITCH / DISCONNECT
- PUSH BUTTON CONTROL STATION
- JUNCTION BOX OR EQUIPMENT CONNECTION - FLEX OR RECEPTACLE AS REQUIRED (CEILING; WALL; FLOOR)
- SIMPLEX RECEPTACLE
- DUPLEX RECEPTACLE
- DOUBLE DUPLEX RECEPTACLE
- DUPLEX RECEPTACLE - SPLIT WIRED FOR SWITCH CONTROL OF LOWER OUTLET
- DUPLEX RECEPTACLE - GFCI PROTECTED
- DUPLEX RECEPTACLE - GFCI PROTECTED MOUNTED ABOVE COUNTERTOP
- DUPLEX RECEPTACLE - FLOOR MOUNTED
- DOUBLE DUPLEX RECEPTACLE - FLOOR MOUNTED
- RECEPTACLE - PENDANT MOUNTED FROM CEILING WITH KELLUM GRIPS
- RECEPTACLE - FLUSH MOUNTED IN CEILING
- RECEPTACLE - 3 POLE, 4 WIRE
- SPECIAL RECEPTACLE - COORDINATE EXACT NEMA CONFIGURATION IF NOT NOTED (SURFACE; WALL)
- GROUND CONNECTION POINT
- TELECOMMUNICATION OUTLET (WALL; FLOOR)
- TELEPHONE VOICE OUTLET
- TELEVISION OUTLET RG-6 QUAD SHIELD HOMERUN, UON
- CONTROL PANEL - TYPE AS NOTED (SURFACE; RECESSED)
- (XXXX) DENOTES AVAILABLE FAULT CURRENT
- LINETYPE/LINEWEIGHT DENOTING FUTURE WORK
- LINETYPE/LINEWEIGHT DENOTING EXISTING WORK TO REMAIN
- LINETYPE/LINEWEIGHT DENOTING NEW WORK
- LINETYPE/LINEWEIGHT DENOTING DEMO WORK

- SMOKE ALARM - MULTIPLE STATION 120VAC/9VDC
- SMOKE AND CARBON MONOXIDE ALARM - MULTIPLE STATION 120VAC/9VDC
- ALARM STROBE - MULTIPLE STATION 120VAC
- CARBON MONOXIDE ALARM - MULTIPLE STATION 120VAC/9VDC
- DUCT SMOKE DETECTOR REMOTE MONITOR/TEST STATION
- SMOKE DETECTOR - DUCT MOUNTED
- SMOKE DETECTOR - PHOTO ELECTRIC
- HEAT DETECTOR - RATE OF RISE
- HEAT DETECTOR - FIXED TEMPERATURE AS NOTED
- FIRE ALARM CONTROLLED MAGNETIC DOOR HOLDER / RELEASE
- FIRE ALARM HORN (WALL; CEILING)
- FIRE ALARM STROBE (WALL; CEILING)
- FIRE ALARM COMBINATION HORN/STROBE (WALL; CEILING)
- FIRE ALARM PULL STATION
- WATER FLOW BELL - 120V CONTROLLED BY FLOW SWITCH
- FIRE ALARM FLOW SWITCH
- FIRE ALARM TAMPER SWITCH
- DOOR ANNUNCIATOR STROBE
- DOOR ANNUNCIATOR HORN/STROBE
- DOOR MAGNET
- DOOR POSITION SENSOR
- REQUEST TO EXIT
- SECURITY CAMERA (FIXED POSITION)
- SECURITY CAMERA (PAN, TILT, ZOOM)

EQUIPMENT TAG LEGEND

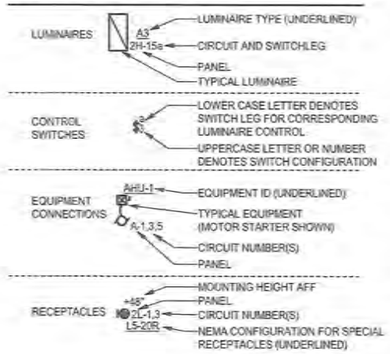

MOUNTING HEIGHT SCHEDULE	
EQUIPMENT	HEIGHT
PANELBOARDS (TOP)	72"
SPECIAL SYSTEM PANELS (TOP)	72"
POWER METER BASE (CENTER LINE OF SOCKET)	PER UTILITY
CONTACTORS, MOTOR STARTERS, DISCONNECT SWITCHES (TOP)	66"
RECEPTACLES IN OFFICE AREAS	18"
RECEPTACLES LOCATED IN HAZARDOUS OR S-2 OCCUPANCIES	24" MINIMUM
RECEPTACLES IN NON-FINISHED AND MECHANICAL SPACES	46"
ABOVE COUNTER/BACKSPLASH DEVICES (DENOTED "AC")	4" ABOVE
WALL MOUNTED SWITCHES	46"
TELECOMMUNICATION OUTLETS (WALL MOUNTED DENOTED "W")	18" (WALL MOUNTED 54")
CLOCK OUTLETS (BOTTOM)	80"
HORNS/STROBES/HORN STROBES/DOORBELL RINGER (BOTTOM)	80"
PULL STATIONS, PUSH BUTTONS, DOORBELL PUSHBUTTON	46"

ABBREVIATIONS	
(D)	DEMOLISH
(E)	EXISTING
(R)	RELOCATED
A	AMPERES
AC	ABOVE COUNTER/BACKSPLASH
AFCI	ARC FAULT CIRCUIT INTERRUPTER
AFF	ABOVE FINISHED FLOOR
AFG	ABOVE FINISHED GRADE
AHJ	AUTHORITY HAVING JURISDICTION
AIC	AMPS INTERRUPTING CAPACITY
AL	ALUMINUM
BJ	BONDING JUMPER
C	CONDUIT OR CELCIUS
CAT	CATEGORY
CB	CIRCUIT BREAKER
CO, C.O.	CONDUIT ONLY
CT	CURRENT TRANSFORMER
CU	COPPER
DISC	DISCONNECT
EGC	EQUIPMENT GROUNDING CONDUCTOR
ERCSP	ELEVATOR RECALL CONTROL AND SUPERVISORY PANEL
F	FARENHEIT
FAA	FIRE ALARM ANNUCIATOR
FACP	FIRE ALARM CONTROL PANEL
FHP	FRACTIONAL HORSEPOWER
FLA	FULL LOAD AMPS
FSD	FIRE SMOKE DAMPER
FT	FEET
FU	FUSE
G, GFCI	GROUND FAULT CIRCUIT INTERRUPTER
GEC	GROUNDING ELECTRODE CONDUCTOR
GFEP	GROUND FAULT EQUIPMENT PROTECTION
HP	HORSEPOWER
ID	IDENTIFICATION
IN	INCHES
KVA	KILOVOLT-AMPERE
KW	KILOWATT
LRA	LOCKED ROTOR AMPS
LTG	LIGHTING
MCA	MINIMUM CIRCUIT AMPACITY
MDP	MAIN DISTRIBUTION PANEL
MDS	MAIN DISTRIBUTION SWITCHBOARD
MFS	MAXIMUM FUSE SIZE
NC	NORMALLY CLOSED
NO	NORMALLY OPEN
P	POLES
PC	PHOTO CELL
PH, Ø	PHASE
PNL	PANEL
PRI	PRIMARY
REC	RECEPTACLE
RIB	RELAY IN A BOX (MOTOR RATED)
SCA	SHORT CIRCUIT AMPS
SCCR	SHORT CIRCUIT CURRENT RATING
SE	SERVICE ENTRANCE RATED
SEC	SECONDARY
SSBJ	SUPPLY SIDE BONDING JUMPER
SSEBJ	SUPPLY SIDE EQUIPMENT BONDING JUMPER
SVC	SERVICE
TELECOM	TELECOMMUNICATION
TGB	TELECOMMUNICATION GROUNDING BUSBAR
TMGB	TELECOMMUNICATION MAIN GROUNDING BUSBAR
TYP	TYPICAL
UON	UNLESS OTHERWISE NOTED
V	VOLTS
VA	VOLTS-AMPERES
VFD	VARIABLE FREQUENCY DRIVE
W	WATTS OR WIRE
WG	WIRE GUARD
WP	WEATHERPROOF (NEMA 4 RATED)
XFMR	TRANSFORMER

GENERAL REQUIREMENTS

26 05 00 - COMMON WORK REQUIREMENTS FOR ELECTRICAL:

A. ALL ELECTRICAL WORK SHALL BE INSTALLED IN ACCORDANCE WITH ALL REQUIREMENTS OF THE LATEST EDITION OF THE NATIONAL ELECTRIC CODE, STATE, MUNICIPAL, FEDERAL LAWS, AND AMENDMENTS GOVERNING THE PROJECT. ALL WORK SHALL BE PERFORMED UNDER THE SUPERVISION OF A CERTIFIED ADMINISTRATOR JOURNEYMAN ELECTRICIAN. CONTRACTOR SHALL SUBMIT REQUEST FOR SUBSTITUTION IN WRITING TO THE ENGINEER. THE CONTRACTOR SHALL OBTAIN ALL REQUIRED CONSTRUCTION PERMITS AND PAY ALL ASSOCIATED FEES. MATERIALS AND EQUIPMENT SHALL BE NEW COMMERCIAL GRADE AND ACCEPTABLE TO THE AUTHORITY HAVING JURISDICTION AS SUITABLE FOR THE USE INTENDED. ALL ELECTRICAL EQUIPMENT SHALL INCLUDE THE SEAL OF A NATIONALLY RECOGNIZED TESTING LABORATORY FOR THE PURPOSE FOR WHICH IT IS INSTALLED.

B. THE CONTRACTOR IS REQUIRED TO COORDINATE THE MINIMUM WORKING CLEARANCES REQUIRED BY THE NATIONAL ELECTRICAL CODE 110.26. THE CONTRACTOR IS REQUIRED TO COORDINATE WITH ALL SUBCONTRACTORS SO THAT ENCROACHMENTS INTO THIS RESTRICTED SPACE ARE PREVENTED.

C. ALL CABLING, RACEWAYS, CABLE TIES AND COMPONENTS LOCATED IN CEILING SPACES THAT ARE PLENUMS SHALL BE PLENUM RATED.

D. PENETRATIONS OF FIRE BARRIERS: ALL ELECTRICAL PENETRATIONS THROUGH FIRE RATED BARRIERS SHALL BE SEALED IN ACCORDANCE WITH NEC ARTICLE 300.21. PROVIDE FIRE PUTTY AT ALL BOXES IN FIRE RATED WALLS. CONTRACTOR TO PROVIDE SUBMITTAL OF ALL FIRE RATING SYSTEMS TO BE USED. VAPOR BARRIERS: SEAL ALL VAPOR BARRIER PENETRATIONS TO MAINTAIN SYSTEM INTEGRITY.

E. ACCESS PANELS: PROVIDE ACCESS PANELS FOR ALL LOCATIONS NECESSARY TO ACCESS ELECTRICAL EQUIPMENT AND JUNCTION BOXES. ACCESS PANELS SHALL BE FIRE RATED EQUAL TO OR EXCEEDING THE ADJACENT WALL OR CEILING CONSTRUCTION AND PAINTED TO MATCH.

F. SEISMIC: CONTRACTOR TO PROVIDE DEFERRED SUBMITTAL FOR SEISMIC ANCHORING DESIGN FOR ALL EQUIPMENT OVER 400 POUNDS.

26 05 19 - POWER CONDUCTORS:

A. ALL POWER AND CONTROL CONDUCTORS SHALL BE COPPER UNLESS NOTED OTHERWISE. ALL CONDUCTORS ROUTED IN UNHEATED SPACES OF THE BUILDING, UNDERGROUND, OR LOCATED OUTSIDE OF THE BUILDING ARE REQUIRED TO HAVE TYPE XHHW 90 DEGREE C INSULATION. ALL CONDUCTORS LOCATED IN HEATED SPACES CAN BE XHHW OR THHN 90 DEGREE C INSULATION UNLESS NOTED OTHERWISE. CONDUCTOR AMPACITY SHALL BE BASED ON TABLE 310-15(B)(16) OF THE NEC. USE 60-DEGREE C. RATING COLUMN FOR CIRCUITS TERMINATING ON DEVICES RATED BELOW 100A. USE 75-DEGREE C RATING COLUMN FOR CIRCUITS TERMINATING ON DEVICES AND IN ENCLOSURES RATED 100A AND OVER. 90-DEGREE C, RATING COLUMN CAN BE USED FOR DERATING CALCULATIONS ONLY. PROVIDE UNSHARED DEDICATED NEUTRAL FOR EACH CIRCUIT.

B. INSTALL IN ACCORDANCE WITH NEC REQUIREMENTS FOR AMBIENT TEMPERATURE DERATING, CONDUIT FILL DERATING AND BOX FILL. COLOR CODE CONDUCTORS: BLACK, RED, WHITE, AND GREEN FOR 240/120V 1 PHASE 3 WIRE CIRCUITS; BLACK, RED, BLUE, WHITE, AND GREEN FOR 208Y/120V 3 PHASE 4 WIRE CIRCUITS AND BROWN, ORANGE, YELLOW, GRAY FOR ALL 480Y/277 V 3 PHASE CIRCUITS. IDENTIFY GROUNDED CONDUCTORS PER NEC FOR ALL CIRCUITS.

C. MINIMUM SIZE CONDUCTORS FOR 15 AND 20 AMP BRANCH CIRCUITS MEASURED FROM THE PANELBOARD TO THE FURTHEST DEVICE ON THE CIRCUIT UNLESS OTHERWISE NOTED ON THE DRAWINGS.
   120 VOLT BRANCH CIRCUITS:
   12 AWG UP TO 75 FEET.
   10 AWG 75 FEET TO 120 FEET.
   8 AWG GREATER THAN 120 FEET.

26 05 33 - RACEWAY AND BOXES FOR ELECTRICAL SYSTEMS:

A. ALL CLASS 1 CIRCUITS SHALL BE INSTALLED IN CONCEALED METALLIC RACEWAY EXCEPT WHERE SPECIFICALLY INDICATED ELSEWHERE IN THE SPECIFICATIONS OR SHOWN ON THE DRAWINGS. CLASS 2 CIRCUITS MAY BE INSTALLED IN CABLE TRAYS OR CAT 5 RATED J-HOOKS SPACED NO MORE THAN 4 FT APART WHERE NO CABLE TRAY IS DENOTED. WHERE WIRING OR CABLING IS ROUTED IN NON-ACCESSIBLE LOCATION, A RACEWAY SYSTEM IS TO BE PROVIDED.
   - BELOW GRADE: PVC, HDPE OR RMC (RMC MUST BE USED FOR 90 DEGREE BENDS AND STUB UPS).
   - EXPOSED INTERIOR: RMC, IMC, OR EMT.
   - CONCEALED INTERIOR: RMC, IMC, EMT, OR MC CABLE.
   - HAZARDOUS CLASSIFIED WIRING: RMC OR MC-HL. (CONDUIT SEALS PER NEC REQUIREMENTS).
   - EXPOSED TO PHYSICAL DAMAGE (INSTALLED EXPOSED BELOW 8 FT): RMC. ALSO PROVIDE RMC FOR ALL PENETRATIONS AND STUB UPS FROM CONCRETE STRUCTURES AND FLOORS. PROVIDE 10 FT MINIMUM STUB OUT FROM UNDERGROUND LIGHT POLE BASES.

B. MAKE CONNECTIONS TO MOTORS, TRANSFORMERS AND OTHER EQUIPMENT WITH FLEXIBLE METAL CONDUIT (FMC) OF GALVANIZED STEEL. USE FITTINGS LISTED FOR USE WITH FLEXIBLE METAL CONDUIT OF ELECTRO ZINC GALVANIZED MALLEABLE IRON OR STEEL CONSTRUCTION. USE LIQUID TIGHT FLEXIBLE CONDUIT FOR ALL FLEXIBLE EXTERIOR LOCATIONS, WET LOCATIONS AND CONNECTIONS TO PUMPS.

C. CONCEAL ALL ELECTRICAL RACEWAYS, BOXES, CABLING, CONDUCTORS AND THE LIKE IN WALLS, BELOW FLOORS, SLABS OR ABOVE FINISHED CEILING SPACES. ELECTRICAL EQUIPMENT AND WIRING CAN BE EXPOSED IN MECHANICAL ROOMS, TELECOMMUNICATION ROOMS OR WHERE SPECIFICALLY NOTED. DO NOT ROUTE RACEWAYS ON THE EXTERIOR SURFACE OF THE BUILDING OR THE ROOF UNLESS SPECIFICALLY NOTED OTHERWISE.

D. PROVIDE ALL WIRING AND EQUIPMENT IN ELEVATOR PITS, WET OR EXTERIOR LOCATIONS USING EQUIPMENT AND WIRING METHODS RATED FOR WET ENVIRONMENTS.

E. BOXES: PROVIDE PULL AND JUNCTION BOXES AS REQUIRED PER NEC REQUIREMENTS RATED FOR THE ENVIRONMENT INSTALLED. BRANCH CIRCUIT JUNCTION BOXES TO BE ELECTRO-GALVANIZED, 4" SQUARE BY 1 1/2" DEEP MINIMUM FOR USE IN INTERIOR AREAS. PROVIDE 4 11/16" SQUARE BY 2 1/8" DEEP OUTLET BOXES FOR ALL VOICE AND DATA OUTLETS. DO NOT INSTALL BOXES BACK-TO-BACK IN WALLS. PROVIDE SEPARATION TO MINIMIZE SOUND TRANSFER. PROVIDE FIRE RATED PADS TO COVER EACH BOX IN FIRE RATED WALLS WHERE NECESSARY TO MAINTAIN FIRE WALL RATING.

26 24 16 - PANELBOARDS AND SWITCHBOARDS:

A. BRANCH CIRCUIT: PROVIDE AND INSTALL NEMA PB1; BOLT-ON CIRCUIT BREAKER TYPE. FS W-P-115; TYPE I, CLASS 1 PANELBOARD OF THE RATING AND CONFIGURATION AS SHOWN ON THE SINGLE LINE DIAGRAM AND PANEL SCHEDULES. PROVIDE TYPED CIRCUIT DIRECTORY SHOWING CIRCUITING ARRANGEMENT.

B. DISTRIBUTION: PROVIDE AND INSTALL I-LINE TYPE; CIRCUIT BREAKER TYPE. CLASS 1 PANELBOARD OR SWITCHBOARD OF THE RATING AND CONFIGURATION AS SHOWN ON THE SINGLE LINE DIAGRAM AND PANEL SCHEDULES.

C. COORDINATE AND PROVIDE THE EQUIPMENT WITH THE SHORT CIRCUIT CURRENT RATING (SCCR) FOR THE AVAILABLE FAULT CURRENT AT THE POINT OF THE SYSTEM WHERE INSTALLED.

26 27 13 - ELECTRICAL SERVICES:

A. THE ELECTRICAL CONTRACTOR SHALL CONTACT THE SERVING UTILITY CO. AND VERIFY EXACT SERVICE REQUIREMENTS FOR POWER. THE CONTRACTOR SHALL COORDINATE AND PROVIDE ALL REQUIREMENTS OF SERVING UTILITY AND ALL EQUIPMENT SHALL CONFORM TO THE SERVING UTILITY STANDARDS AND REQUIREMENTS.

26 27 26 - WIRING DEVICES:

A. DEVICE COLOR: WHITE. DEVICE PLATES: FINISHED AREAS-FLUSH SMOOTH WHITE NYLON WITH MATCHING SCREWS. UNFINISHED AREAS - RAISED GALVANIZED STEEL. EXTERIOR AREAS - DIE CAST METAL, POWDERCOAT FINISH, GASKETED, EXTRA DUTY RATED.

B. RECEPTACLES: PROVIDE 20AMP UL LISTED COMMERCIAL GRADE NEMA 5-20R DUPLEX GROUNDING BACK AND SIDE WIRED. PROVIDE DUPLEX RECEPTACLES WITH CLASS 3 INTEGRAL GROUND FAULT CURRENT INTERRUPTER (GFCI) AND SPECIFIC USE RECEPTACLES WHERE INDICATED ON THE DRAWINGS. THE GFCI SHALL BE INSTALLED IN A READILY ACCESSIBLE LOCATION OR PROVIDE GFCI BREAKER IN PANEL. INSTALL RECEPTACLES WITH GROUNDING POLE ON BOTTOM.

C. SWITCHES: PROVIDE 20 AMP, 120 V AC, BACK AND SIDE WIRED CONFIGURED AS INDICATED ON THE DRAWINGS. PROVIDE NEUTRAL IN ALL SWITCH BOXES FOR EACH SWITCHED CIRCUIT. DIMMING SWITCHES TO BE RATED AND CONFIGURED TO MATCH THE LOAD REQUIREMENTS.

26 51 00 - LUMINAIRES:

A. PROVIDE AND INSTALL ALL LIGHTING EQUIPMENT AS SHOWN ON THE DRAWINGS AND DESCRIBED IN THE LIGHTING FIXTURE SCHEDULE. PROVIDE FLUORESCENT FIXTURES WITH RAPID START, CLASS P, CONSTANT WATTAGE, ELECTRONIC BALLASTS. EXTERIOR FIXTURES SHALL BE RATED FOR OPERATION AT LEAST -20 DEG F. PROVIDE LED FIXTURES WITH LONG-LIFE LED'S, COUPLED WITH HIGH EFFICIENCY DRIVERS, L80 PERFORMANCE FOR 50,000 HOURS. DIMMING BALLASTS SHALL BE FLICKER-FREE, LOW INRUSH, 89% EFFICIENT AND LOW EMI. PROVIDE COMPATIBLE DIMMER SWITCH TO DIMMER DRIVER.

B. CONNECT ALL EMERGENCY LIGHTING UNITS AND MODULES TO THE LOCAL AREA LIGHTING CIRCUITS AHEAD OF ANY SWITCHES OR RELAYS. LOCATE REMOTE TEST SWITCHES AND INDICATOR LIGHTS AS NECESSARY FOR TEST SWITCHES ON EMERGENCY MODULES.

ELECTRICAL SHEET LIST	
NUM	SHEET TITLE
E0.1	ELECTRICAL LEGEND & GENERAL REQUIREMENTS
E1.1	ELECTRICAL SITE PLAN
E2.1	ELECTRICAL LIGHTING PLAN
E3.1	WASHETERIAL POWER PLANS
E3.2	POWER PLANT POWER PLAN
E4.1	WASHETERIA REMOTE MONITORING PLAN
E5.1	ELECTRICAL POWER DIAGRAMS & DETAILS
E5.2	ELECTRICAL POWER DIAGRAMS & DETAILS
E6.1	ELECTRICAL CONTROL DIAGRAMS & DETAILS
TOTAL SHEETS: 9	

E.I.C. ENGINEERS, INC
ELECTRICAL & LIGHTING
EIC JOB NO: E13-1941
6927 OLD SEWARD HWY
SUITE 200
ANCHORAGE, AK 99518
T 907.349.9712
F 907.349.9713
www.eicengs.com

SCALE:

BAR IS ONE INCH ON ORIGINAL DRAWINGS
IF NOT ONE INCH ON THIS SHEET, ADJUST SCALES ACCORDINGLY

CONSTRUCTION RECORD
FIELD BOOK
STAKING
FOREMAN
AS-BUILT
INSPECTOR

STATE OF ALASKA
MILITARY & EMERGENCY SERVICES
FOR CONSTRUCTION
NOT
PROFESSIONAL ENGINEER
EDWARD I. CHAMBERS
No. 9173

WASHETERIA AND WATER TANK
ELECTRICAL LEGEND & GENERAL REQUIREMENTS
CHEFORNAK, ALASKA

CE2 ENGINEERS, INC.
PO BOX 230948 ANCHORAGE, AK 99523 PH: 907-349-1010 FAX: 907-349-1015

REVISION	
NUM	DESCRIPTION

Project No. E13-1941
Date AUGUST 2016
Designed BLS
Drawn BLS
Approved EDC

Sheet No.
E0.1

8/29/2016 5:16:44 P:\E13\E13-1941 Chefornak Washeteria\050 DWG\E13-1941_Chefornak_Washeteria.rvt
[8/29/2016 16:24:39 : fc2 : pschd :>20pschd : tvu0nSH : 0.8,34.7,35.5/1378

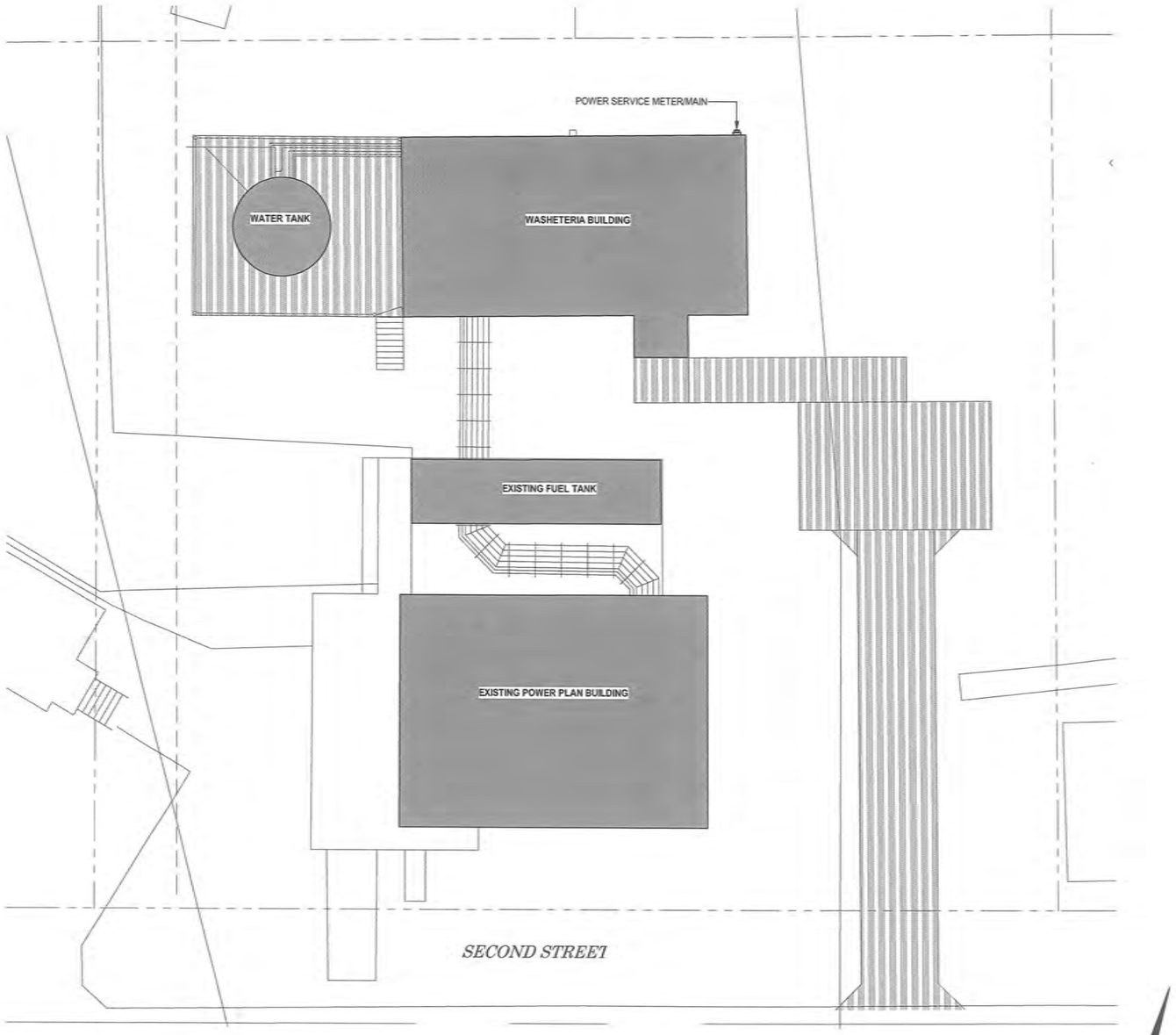

1 E1.1 ELECTRICAL SITE PLAN
SCALE: 1" = 10'-0"

8/29/2016 5:16:45 P:\E13\E13-1941 Chefornak Washeteria\050 DWG\E13-1941_Chefornak_Washeteria.rvt
8/29/2016 16:24:39 : fc-1 : pschd : >20lschd : lvisOnSht : 0.8:34.7:35.5/1378

EIC ENGINEERS, INC
ELECTRICAL ENGINEERS
EIC JOB NO: E13-1941
6927 OLD SEWARD HWY
SUITE 200
ANCHORAGE, AK 99518
T 907.349.9712
F 907.349.9713
www.eiceng.com

SCALE:
BAR IS ONE INCH ON ORIGINAL DRAWING
0 1"
IF NOT ONE INCH ON THIS SHEET, ADJUST SCALES ACCORDINGLY

CONSTRUCTION RECORD
FIELD BOOK
STAKING
FOREMAN
AS-BUILT
INSPECTOR

STATE OF ALASKA
49TH
PROFESSIONAL ENGINEER
PRELIMINARY NOT FOR CONSTRUCTION
DRAWING
Date: 9/7/16

WASHETERIA AND WATER TANK
ELECTRICAL SITE PLAN
CHEFORNAK, ALASKA

CE2 ENGINEERS, INC.
PO BOX 232946 ANCHORAGE, AK 99523 PH: 907-349-1010 FAX: 907-349-1015

REVISION
NU M
DESCRIPTION

Project No. E13-1941
Date AUGUST 2016
Designed BLS
Drawn BLS
Approved EDC

Sheet No.
E1.1

REFERENCED SHEET NOTES

1	PROVIDE DUAL TECHNOLOGY WALL MOUNTED OCCUPANCY SENSOR.
2	TO ROOM RECEPTACLE BRANCH CIRCUIT. SEE POWER PLAN FOR CONTINUATION.
3	TO CEILING FAN CONTROL SWITCHES. SEE POWER PLAN FOR CONTINUATION.
4	PROVIDE LINE VOLTAGE 120V 600W PHOTOCELL FOR EXTERIOR LIGHTING AUTOMATIC CONTROL.

LUMINAIRE SCHEDULE

NOTES

(KEY)	'(x)' DENOTES A GENERAL, NON-REFERENCED, NOTE. NUMBERED NOTES ARE REFERENCED IN THE SCHEDULE.
(A)	QUANTITIES/COUNTS SHOWN IN SCHEDULES ARE FOR CONVENIENCE ONLY. CONTRACTOR TO VERIFY ALL QUANTITIES/COUNTS FROM PLANS.
(B)	CATALOG NUMBERS ARE FOR GENERAL REFERENCE AND ARE NOT INCLUSIVE OF ALL OPTIONS OR REQUIREMENTS DENOTED ON PLANS AND SPECIFICATIONS.
(C)	REFER TO ARCHITECTURAL DRAWINGS FOR EXACT LOCATION AND PROVIDE MOUNTING HARDWARE/FLANGES ETC FOR ALL LUMINAIRES FOR CEILING TYPES SHOWN.
(D)	LUMINAIRES NOTED ON THE FLOOR PLANS AS 'NL' (NIGHTLIGHT) SHALL BE CONNECTED TO UNSWITCHED POWER CIRCUIT NOTED ON DRAWINGS.
1	PROVIDE STRIP LIGHT WITH AIRCRAFT CABLE SUPPORTS AS NECESSARY TO SUSPEND FROM CEILING.
2	COORDINATE LUMINAIRE FINISH/COLOR WITH ARCHITECT/OWNER.

SCHEDULE

QTY	TYPE	DESCRIPTION	WATTS	LAMPS	MOUNTING	MANUFACTURER	MODEL	NOTES
13	CZ5	4FT LED STRIP LIGHT W/ LENS	42 W	5000 LM LED	CEILING SUSPENDED +9'-0"	LITHONIA	ZL1N-L48-5000LM-FST-MVOLT-40K-80CRI-WH	1
6	CZ10	8FT LED STRIP LIGHT W/ LENS	84 W	10000 LM LED	CEILING SUSPENDED +9'-0"	LITHONIA	TZL1N-L96-10000LM-FST-MVOLT-40K-80CRI-WH	1
9	E1	LED EMERGENCY LIGHTING UNIT W/ TWO ADJUSTABLE HEADS	5 W	(2)1.5W LED	WALL +7'-0" OR CEILING	LITHONIA	ELM2-LED	
1	E2	LED EMERGENCY LIGHTING UNIT W/ TWO ADJUSTABLE HEADS & CAPACITY TO POWER REMOTE HEAD	5 W	(2)1.5W LED	WALL +7'-0"	LITHONIA	ELM2-LED-HO	
1	ER1	LED EMERGENCY TWIN REMOTE HEAD W/ EXTERIOR RATING	3 W	(2)1.5W LED	WALL ABOVE DOOR	LITHONIA	EL4-T-QWP-L0304	
2	WL21	2FT LED WALL BRACKET	12 W	1200 LM LED	WALL	LITHONIA	WL2-12L-EZ1-LP840	
2	X	LED EXIT SIGN W/ BATTERY BACKUP	1 W	GREEN LED	WALL OR CEILING	LITHONIA	LQM-S-W-3-G-120/277-ELN	
3	ZW1	WALL MOUNTED LED AREA LIGHT W/ CUTOFF OPTICS & TYPE 3 DISTRIBUTION	36 W	3600 LM LED	WALL +10'-0"	LITHONIA	DSXW1-LED-20C-530-40K-T3M-MVOLT	2

INTERIOR LIGHTING CALCULATIONS

ROOM NUMBER	NAME	AREA (FT^2)	PERIMETER	CALC LUMINAIRE PLANE	CALC TASK PLANE	REFLECTANCES CEILING	REFLECTANCES WALL	REFLECTANCES FLOOR	AVERAGE LIGHTING LEVEL
101	VESTIBULE	53.7	29' - 4"	9' - 0"	2' - 6"	80.00%	50.00%	20.00%	34 fc
102	OFFICE	131.6	47' - 5"	9' - 0"	2' - 6"	80.00%	50.00%	20.00%	37 fc
103	DRYER/MECH	102.0	40' - 9"	9' - 0"	2' - 6"	80.00%	50.00%	20.00%	22 fc
104	LAUNDRY	384.8	82' - 7"	9' - 0"	2' - 6"	80.00%	50.00%	20.00%	58 fc
105	HALL	43.7	29' - 10"	9' - 0"	2' - 6"	80.00%	50.00%	20.00%	36 fc
106	STORAGE	40.3	29' - 4"	9' - 0"	2' - 6"	80.00%	50.00%	20.00%	66 fc
107	TOILET	64.8	39' - 10"	9' - 0"	2' - 6"	80.00%	50.00%	20.00%	33 fc
108	ADA TOILET	77.7	42' - 1"	9' - 0"	2' - 6"	80.00%	50.00%	20.00%	30 fc
109	LOCKERS	56.3	32' - 8"	9' - 0"	2' - 6"	80.00%	50.00%	20.00%	56 fc
110	MECHANICAL ROOM	300.4	77' - 8"	8' - 6"	2' - 6"	80.00%	50.00%	20.00%	40 fc
111	MECHANICAL	122.5	46' - 8"	8' - 6"	2' - 6"	80.00%	50.00%	20.00%	40 fc

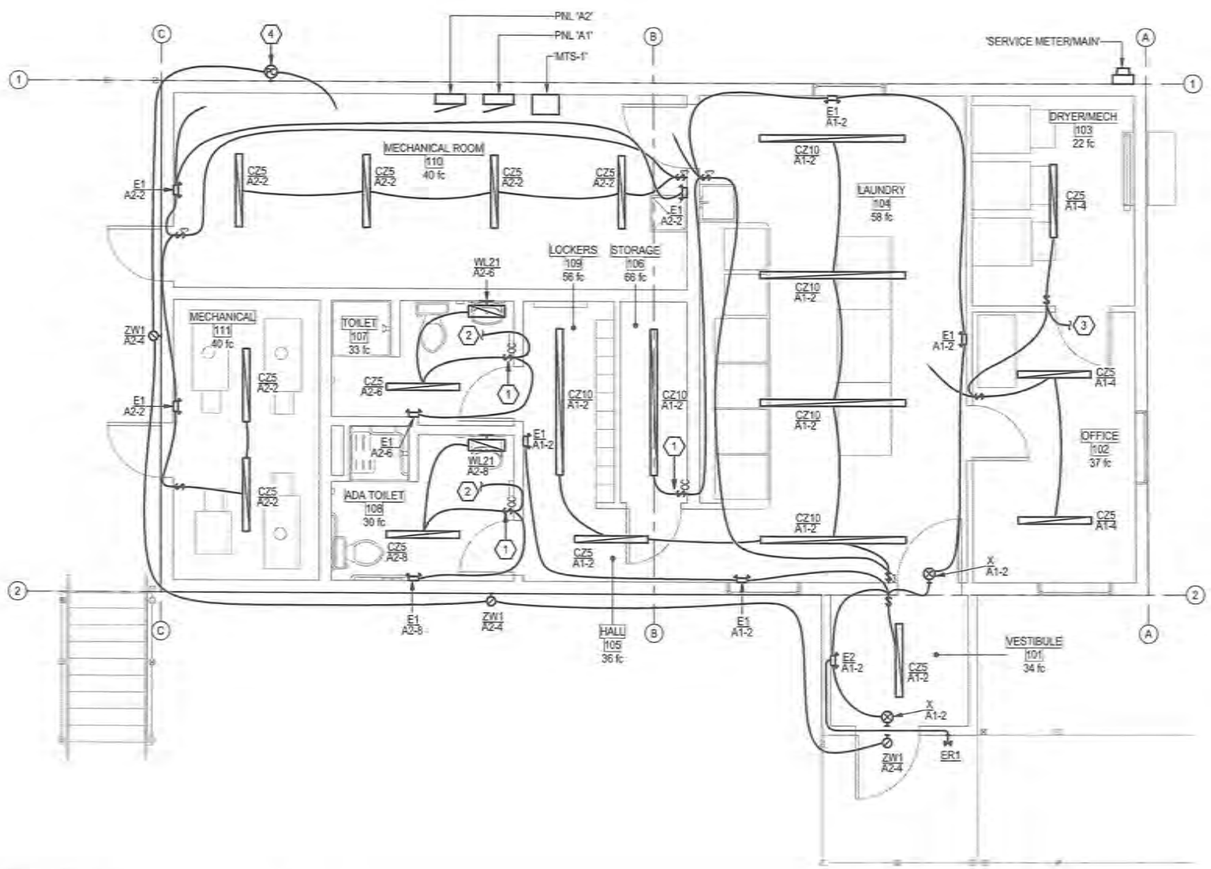

1 WASHETERIA LIGHTING PLAN
E2.1 SCALE: 1/4" = 1'-0"

EIC ENGINEERS, INC
ELECTRICAL CONSULTANTS
EIC JOB NO: E13-1941
6927 OLD SEWARD HWY
SUITE 200
ANCHORAGE, AK 99518
T 907.349.9712
F 907.349.9713
www.eiceng.com

SCALE:

BAR IS ONE INCH ON ORIGINAL DRAWING 0 1"

IF NOT ONE INCH ON THIS SHEET, ADJUST SCALES ACCORDINGLY

CONSTRUCTION RECORD
FIELD BOOK
STAKING
FOREMAN
AS-BUILT
INSPECTOR

STATE OF ALASKA PRELIMINARY NOT FOR CONSTRUCTION

WASHETERIA AND WATER TANK
ELECTRICAL LIGHTING PLAN
CHEFORNAK, ALASKA

CE2 ENGINEERS, INC.
PO BOX 220246 ANCHORAGE, AK 99522 PH 907-349-1015 FAX 907-349-1015

REVISION NUM	DESCRIPTION

Project No. E13-1941
Date AUGUST 2016
Designed BLS
Drawn BLS
Approved EDC

Sheet No.
E2.1

8/29/2016 5:16:48 P:\E13\E13-1941 Chefornak Washeteria\050 DWG\E13-1941_Chefornak_Washeteria.rvt
8/29/2016 16:24:39 1:64 : pschd : >20%chd : NoOnSht : 0:8:34.7335/5/1378

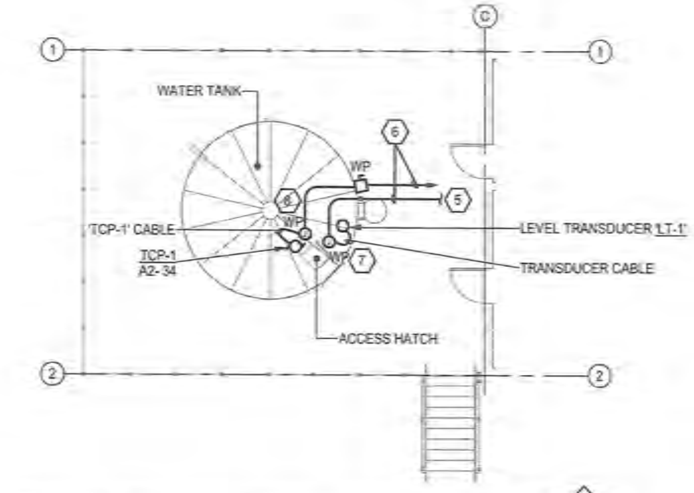

2 WASHETERIA WATER TANK POWER PLAN
E3.1 SCALE: 1/8" = 1'-0"

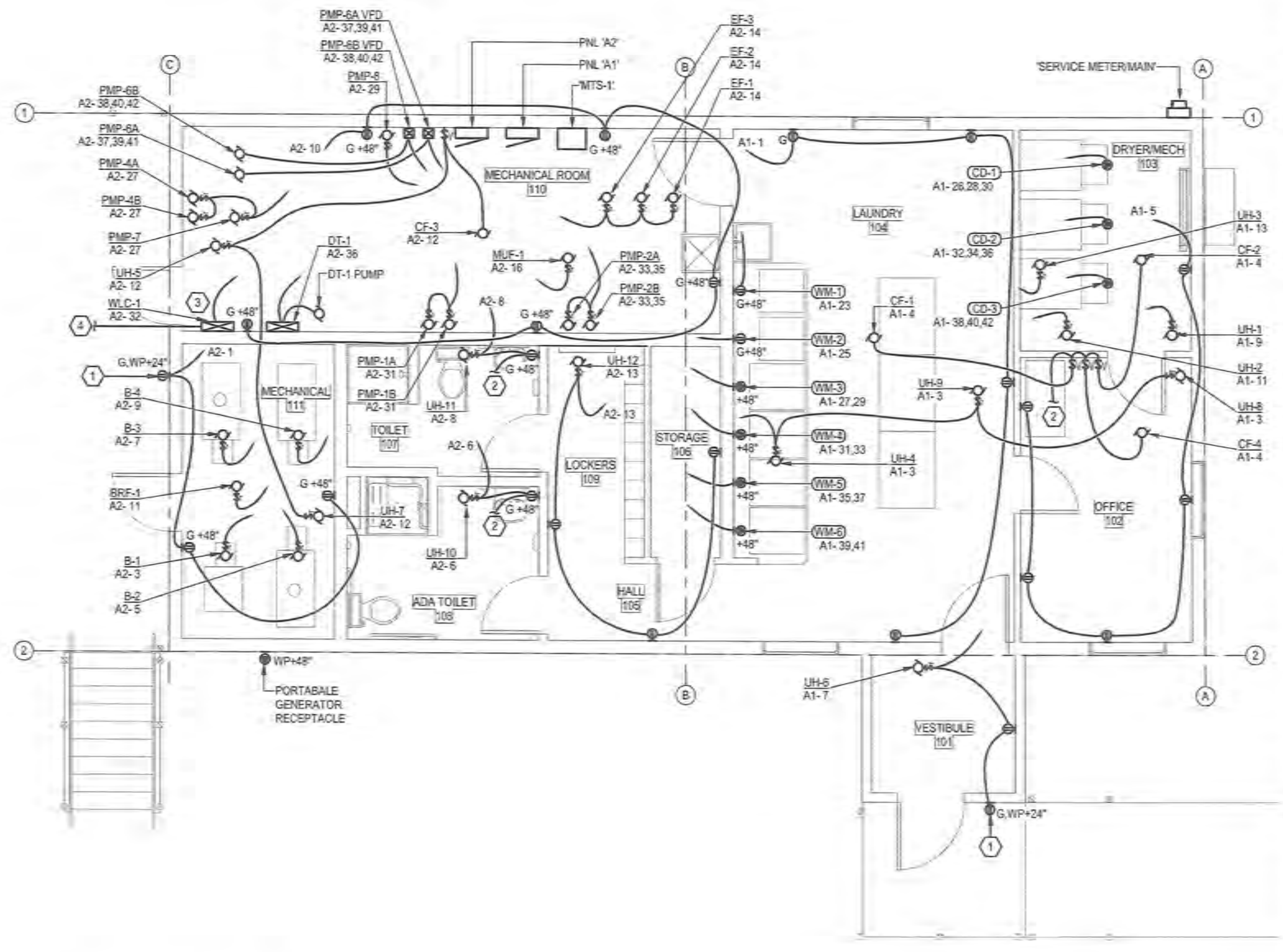

1 WASHETERIA POWER PLAN
E3.1 SCALE: 1/4" = 1'-0"

GENERAL NOTES

1. CONTRACTOR TO COORDINATE VARIOUS 120V CONTROL TRANSFORMER POWER CONNECTIONS AND LOCATIONS WITH MECHANICAL.

REFERENCED SHEET NOTES	
1	PROVIDE WEATHERPROOF WHILE-IN-USE COVER FOR EXTERIOR RECEPTACLE.
2	TO ROOM LIGHTING BRANCH CIRCUIT. SEE LIGHTING PLAN FOR CONTINUATION.
3	WATER TANK LEVEL CONTROLLER, SEE 1/E6.1 FOR DETAIL.
4	PROVIDE 1" CONDUIT WITH LEVEL TRANSDUCER CONTROL WIRING TO EXTERIOR WATER TANK.
5	1" CONDUIT WITH LEVEL TRANSDUCER CONTROL WIRING TO INTERIOR WATER TANK LEVEL CONTROLLER.
6	ROUTE CONDUITS UNDER DECKING.
7	PROVIDE WEATHERPROOF JUNCTION BOX WITH TERMINAL STRIP ADJACENT TO WATER TANK ACCESS HATCH FOR TRANSITIONING BETWEEN TRANSDUCER CABLE AND BUILDING CONTROL WIRING. PROVIDE 1" CONDUIT FROM JUNCTION BOX INTO WATER TANK FOR MOUTING TRANSDUCER. COORDINATE EXACT WATER TANK PENETRATION, AND TRANSDUCER LOCATION WITH CIVIL. PROVIDE CABLE STRAIN RELIEF AND SEAL ALL PENETRATIONS.
8	PROVIDE WEATHERPROOF JUNCTION BOX WITH TERMINAL STRIP ADJACENT TO WATER TANK ACCESS HATCH FOR TRANSITIONING BETWEEN PUMP CABLE AND BUILDING WIRING. PROVIDE 1" CONDUIT FROM JUNCTION BOX INTO WATER TANK FOR ROUTING PUMP CABLE. COORDINATE EXACT WATER TANK PENETRATION, AND PUMP LOCATION WITH CIVIL. PROVIDE CABLE STRAIN RELIEF AND SEAL ALL PENETRATIONS.

WASHETERIA MECHANICAL EQUIPMENT CONNECTION SCHEDULE

NOTES

(KEY)	'(x)' DENOTES A GENERAL, NON-REFERENCED, NOTE. NUMBERED NOTES ARE REFERENCED IN THE SCHEDULE.
(A)	QUANTITIES/COUNTS SHOWN IN SCHEDULES ARE FOR CONVENIENCE ONLY. CONTRACTOR TO VERIFY ALL QUANTITIES/COUNTS FROM PLANS.
(B)	REFER TO FLOOR PLAN DRAWINGS FOR EQUIPMENT TYPE REQUIREMENTS, LOCATIONS AND QUANTITIES.
(C)	COORDINATE ALL CONNECTION REQUIREMENTS WITH ACTUAL EQUIPMENT SUPPLIED PRIOR TO ROUGH-IN.
1	PROVIDE HP RATED RELAY-IN-A-BOX (RIB) AS NECESSARY FOR CONTROL. COORDINATE ALL CONTROL REQUIREMENTS WITH MECHANICAL.
2	UNIT PROVIDED WITH VFD AS PART OF MECHANICAL PACKAGE. COORDINATE REQUIREMENTS WITH MECHANICAL.
3	VFD PROVIDED WITH INTEGRAL LOCKABLE CIRCUIT BREAKER DISCONNECT SWITCH.
4	CEILING FAN PROVIDED WITH VARIABLE SPEED WALL SWITCH AS PART OF MECHANICAL PACKAGE. COORDINATE WITH MECHANICAL.
5	ECM MOTOR UNIT PROVIDED WITH INTEGRAL CONTROLLER. ELECTRICIAN TO PROVIDE DISCONNECT ONLY. COORDINATE WITH MECHANICAL.
6	PUMP CONTROLLED THROUGH HEAT TRACE CONTROLLER 'HTTC-1'. COORDINATE WITH MECHANICAL.
7	PUMP CONTROLLED THROUGH WATER TANK HEATING 'HWM-2' CONTROLS. COORDINATE WITH MECHANICAL.
8	UNIT HEATER CONTROLLED THROUGH CONTROLLER 'UHCP-1'. COORDINATE WITH MECHANICAL.
9	UNIT CONTROLLED BY LINE VOLTAGE THERMOSTAT. COORDINATE WITH MECHANICAL.

SCHEDULE

QTY	EQUIP ID	LOCATION OR FUNCTION	KVA	HP	FLA	MCA	MFS	V	PH	FEEDER (MINIMUM) CU UON	NOTES
1	B-1	BOILER	0.600		5			120	1	0.5"C, (2)12 AWG, (1)12 AWG EGC	
1	B-2	BOILER	0.600		5			120	1	0.5"C, (2)12 AWG, (1)12 AWG EGC	
1	B-3	BOILER	0.600		5			120	1	0.5"C, (2)12 AWG, (1)12 AWG EGC	
1	B-4	BOILER	0.600		5			120	1	0.5"C, (2)12 AWG, (1)12 AWG EGC	
1	BRF-1	BOILER ROOM FAN	0.864	1/3				120	1	0.5"C, (2)12 AWG, (1)12 AWG EGC	1
1	CF-1	CEILING FAN	0.078	FHP	0.65			120	1	0.5"C, (2)12 AWG, (1)12 AWG EGC	4
1	CF-2	CEILING FAN	0.078	FHP	0.65			120	1	0.5"C, (2)12 AWG, (1)12 AWG EGC	4
1	CF-3	CEILING FAN	0.078	FHP	0.65			120	1	0.5"C, (2)12 AWG, (1)12 AWG EGC	4
1	CF-4	CEILING FAN	0.078	FHP	0.65			120	1	0.5"C, (2)12 AWG, (1)12 AWG EGC	4
1	DT-1	DAY TANK	0.864	1/3				120	1	0.5"C, (2)12 AWG, (1)12 AWG EGC	
1	EF-1	EXHAUST FAN	0.118	FHP				120	1	0.5"C, (2)12 AWG, (1)12 AWG EGC	1
1	EF-2	EXHAUST FAN	0.118	FHP				120	1	0.5"C, (2)12 AWG, (1)12 AWG EGC	9
1	EF-3	EXHAUST FAN	0.118	FHP				120	1	0.5"C, (2)12 AWG, (1)12 AWG EGC	1
1	MUF-1	MAKE-UP FAN	0.864	1/3				120	1	0.5"C, (2)12 AWG, (1)12 AWG EGC	1
1	PMP-1A	CIRCULATION PUMP	0.240		2			120	1	0.5"C, (2)12 AWG, (1)12 AWG EGC	5
1	PMP-1B	CIRCULATION PUMP	0.240		2			120	1	0.5"C, (2)12 AWG, (1)12 AWG EGC	5
1	PMP-2A	CIRCULATION PUMP	2.160		6			208	1	0.5"C, (2)12 AWG, (1)12 AWG EGC	5
1	PMP-2B	CIRCULATION PUMP	2.160		6			208	1	0.5"C, (2)12 AWG, (1)12 AWG EGC	5
1	PMP-4A	CIRCULATION PUMP	0.528	1/6				120	1	0.5"C, (2)12 AWG, (1)12 AWG EGC	7
1	PMP-4B	CIRCULATION PUMP	0.528	1/6				120	1	0.5"C, (2)12 AWG, (1)12 AWG EGC	7
1	PMP-6A	PRESSURE PUMP	3.620	3				208	3	0.5"C, (3)12 AWG, (1)12 AWG EGC	2,3
1	PMP-6B	PRESSURE PUMP	3.820	3				208	3	0.5"C, (3)12 AWG, (1)12 AWG EGC	2,3
1	PMP-7	CIRCULATION PUMP	0.264	1/12				120	1	0.5"C, (2)12 AWG, (1)12 AWG EGC	
1	PMP-8	CIRCULATION PUMP	0.528	1/6				120	1	0.5"C, (2)12 AWG, (1)12 AWG EGC	1,6
1	TCP-1	WATER TANK CIRCULATION PUMP	1.180	1/2				120	1	0.5"C, (2)12 AWG, (1)12 AWG EGC	
1	UH-1	UNIT HEATER	0.864	1/3				120	1	0.5"C, (2)12 AWG, (1)12 AWG EGC	1,8
1	UH-2	UNIT HEATER	0.864	1/3				120	1	0.5"C, (2)12 AWG, (1)12 AWG EGC	1,8
1	UH-3	UNIT HEATER	0.864	1/3				120	1	0.5"C, (2)12 AWG, (1)12 AWG EGC	1,8
1	UH-4	UNIT HEATER	0.360	1/8				120	1	0.5"C, (2)12 AWG, (1)12 AWG EGC	9
1	UH-5	UNIT HEATER	0.360	1/8				120	1	0.5"C, (2)12 AWG, (1)12 AWG EGC	9
1	UH-6	UNIT HEATER	0.100	1/60				120	1	0.5"C, (2)12 AWG, (1)12 AWG EGC	9
1	UH-7	UNIT HEATER	0.360	1/8				120	1	0.5"C, (2)12 AWG, (1)12 AWG EGC	9
1	UH-8	UNIT HEATER	0.100	1/60				120	1	0.5"C, (2)12 AWG, (1)12 AWG EGC	9
1	UH-9	UNIT HEATER	0.360	1/8				120	1	0.5"C, (2)12 AWG, (1)12 AWG EGC	9
1	UH-10	UNIT HEATER	0.100	1/60				120	1	0.5"C, (2)12 AWG, (1)12 AWG EGC	9
1	UH-11	UNIT HEATER	0.100	1/60				120	1	0.5"C, (2)12 AWG, (1)12 AWG EGC	9
1	UH-12	UNIT HEATER	0.100	1/60				120	1	0.5"C, (2)12 AWG, (1)12 AWG EGC	9

WASHETERIA LAUNDRY EQUIPMENT CONNECTION SCHEDULE

NOTES

(KEY)	'(x)' DENOTES A GENERAL, NON-REFERENCED, NOTE. NUMBERED NOTES ARE REFERENCED IN THE SCHEDULE.
(A)	QUANTITIES/COUNTS SHOWN IN SCHEDULES ARE FOR CONVENIENCE ONLY. CONTRACTOR TO VERIFY ALL QUANTITIES/COUNTS FROM PLANS.
(B)	REFER TO FLOOR PLAN DRAWINGS FOR EQUIPMENT TYPE REQUIREMENTS, LOCATIONS AND QUANTITIES.
(C)	COORDINATE ALL CONNECTION REQUIREMENTS WITH ACTUAL EQUIPMENT TO BE SUPPLIED PRIOR TO ROUGH-IN.
1	COORDINATE RECEPTACLE CONFIGURATION WITH EQUIPMENT PROVIDED.

SCHEDULE

QTY	EQUIP ID	LOCATION OR FUNCTION	KVA	HP	FLA	MCA	MFS	V	PH	FEEDER (MINIMUM) CU UON	NOTES
1	CD-1	30# STACKED DRYER	2.310		6.4			208	3	0.5"C, (4)12 AWG, (1)12 AWG EGC	1
1	CD-2	30# STACKED DRYER	2.310		6.4			208	3	0.5"C, (4)12 AWG, (1)12 AWG EGC	1
1	CD-3	30# STACKED DRYER	2.310		6.4			208	3	0.5"C, (4)12 AWG, (1)12 AWG EGC	1
1	WM-1	20# FRONT LOAD WASHER	1.800		15			120	1	0.5"C, (2)12 AWG, (1)12 AWG EGC	
1	WM-2	20# FRONT LOAD WASHER	1.800		15			120	1	0.5"C, (2)12 AWG, (1)12 AWG EGC	
1	WM-3	30# FRONT LOAD WASHER	2.080		10			208	1	0.5"C, (3)12 AWG, (1)12 AWG EGC	1
1	WM-4	30# FRONT LOAD WASHER	2.080		10			208	1	0.5"C, (3)12 AWG, (1)12 AWG EGC	1
1	WM-5	30# FRONT LOAD WASHER	2.080		10			208	1	0.5"C, (3)12 AWG, (1)12 AWG EGC	1
1	WM-6	30# FRONT LOAD WASHER	2.080		10			208	1	0.5"C, (3)12 AWG, (1)12 AWG EGC	1

EIC ENGINEERS, INC
ELECTRICAL ENGINEERS
EIC JOB NO: E13-1941
6927 OLD SEWARD HWY
SUITE 200
ANCHORAGE, AK 99518
T 907.349.9712
F 907.349.9713
www.eiceng.com

SCALE:
BAR IS ONE INCH ON ORIGINAL DRAWING
IF NOT ONE INCH ON THIS SHEET, ADJUST SCALES ACCORDINGLY

CONSTRUCTION RECORD
FIELD BOOK
STAKING
FOREMAN
AS-BUILT
INSPECTOR

PRELIMINARY NOT FOR CONSTRUCTION

WASHETERIA AND WATER TANK
WASHETERIAL POWER PLANS
CHEFORNAK, ALASKA

CE2 ENGINEERS, INC.
PO BOX 232946 ANCHORAGE, AK 99523 PH: 907-349-1010 FAX: 907-349-1015

REVISION
NU M
DESCRIPTION

Project No. E13-1941
Date AUGUST 2016
Designed BLS
Drawn BLS
Approved EDC

Sheet No.
E3.1

8/29/2016 5:16:51 P:\E13\E13-1941 Chefornak Washeteria\050 DWG\E13-1941_Chefornak_Washeteria.rvt

POWER PLANT MECHANICAL EQUIPMENT CONNECTION SCHEDULE												
NOTES												
(KEY)	'(x)' DENOTES A GENERAL, NON-REFERENCED, NOTE. NUMBERED NOTES ARE REFERENCED IN THE SCHEDULE.											
(A)	QUANTITIES/COUNTS SHOWN IN SCHEDULES ARE FOR CONVENIENCE ONLY. CONTRACTOR TO VERIFY ALL QUANTITIES/COUNTS FROM PLANS.											
(B)	REFER TO FLOOR PLAN DRAWINGS FOR EQUIPMENT TYPE REQUIREMENTS, LOCATIONS AND QUANTITIES.											
(C)	COORDINATE ALL CONNECTION REQUIREMENTS WITH ACTUAL EQUIPMENT SUPPLIED PRIOR TO ROUGH-IN.											
1	ECM MOTOR UNIT PROVIDED WITH INTEGRAL CONTROLLER. ELECTRICIAN TO PROVIDE DISCONNECT ONLY. COORDINATE WITH MECHANICAL.											
2	PUMP CONTROLLED THROUGH AVEC THERMAL MANAGEMENT PANEL 'TMP'. COORDINATE WITH MECHANICAL.											
3	PUMP CONTROLLED BY TEMPERATURE CONTROLLER 'TC-7'. COORDINATE WITH MECHANICAL.											
SCHEDULE												
QTY	EQUIP ID	LOCATION OR FUNCTION	KVA	HP	FLA	MCA	MFS	V	PH	FEEDER (MINIMUM) CU UON	NOTES	
1	PMP-3	CIRCULATION PUMP	0.832		4			208	1	0.5"C, (2)12 AWG, (1)12 AWG EGC	1,2	
1	PMP-5	CIRCULATION PUMP	0.864	1/2				208	3	0.5"C, (3)12 AWG, (1)12 AWG EGC	3	

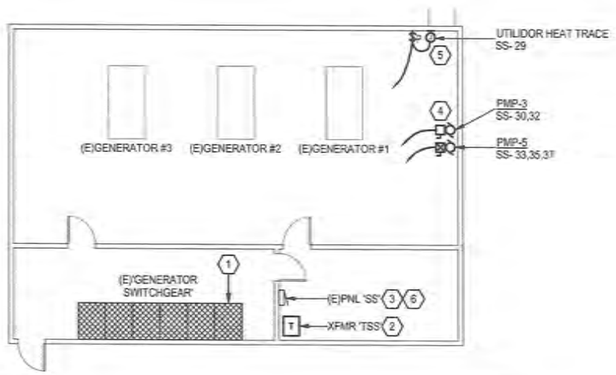

1 POWER PLANT POWER PLAN
E3.2 SCALE: 1/8" = 1'-0"

PLAN
N

REFERENCED SHEET NOTES

1	REMOVE AND REPLACE PANEL 'SS'/TRANSFORMER 'TSS' CIRCUIT BREAKER IN EXISTING GENERATOR SWITCHGEAR. SEE POWER PLANT ONE-LINE DIAGRAMS FOR DETAIL.
2	REMOVE AND REPLACE TRANSFORMER 'TSS' AND FEEDERS. SEE POWER PLANT ONE-LINE DIAGRAMS FOR DETAIL.
3	UTILIZE SPARE/SPACE IN EXISTING PANEL 'SS' FOR NEW BRANCH CIRCUITS. SEE POWER PLANT ONE-LINE DIAGRAMS FOR DETAIL.
4	PROVIDE POWER CONNECTIONS FOR NEW PUMPS. COORDINATE EXACT LOCATION AND REQUIREMENTS WITH MECHANICAL.
5	PROVIDE POWER CONNECTION TO UTILIDOR HEAT TRACE. CONTROL FROM WALL MOUNT PILOT LIGHT SWITCH. COORDINATE EXACT LOCATION AND REQUIREMENTS WITH MECHANICAL.
6	PROVIDE UPDATED TYPED PANEL DIRECTORY. SEE PANEL 'SS' SCHEDULE ON SHEET E5.2 FOR DETAIL.

E.I.C. ENGINEERS, INC
ELECTRICAL CONSULTANTS
EIC JOB NO: E13-1941
6927 OLD SEWARD HWY
SUITE 200
ANCHORAGE, AK 99518
T 907-349-9712
F 907-349-9713
www.eiceng.com

SCALE:

BAR IS ONE INCH ON ORIGINAL DRAWING 0 1"

IF NOT ONE INCH ON THIS SHEET, ADJUST SCALE ACCORDINGLY

CONSTRUCTION RECORD
FIELD BOOK:
BY MING:
FOREMAN
AS-BUILT
INSPECTOR

STATE OF ALASKA
JOSEPH MINARY NOTT
ELECTRICAL
ALASKA
10973
PROFESSIONAL ENGINEER
FOR CONSTRUCTION

WASHETERIA AND WATER TANK
POWER PLANT
POWER PLAN
CHEFORNAK, ALASKA

CE2 ENGINEERS, INC.
PO BOX 223546 ANCHORAGE, AK 99523 PH: 907-348-1010 FAX: 907-348-1015

REVISION

NUM	DESCRIPTION

Project No. E13-1941
Date AUGUST 2016
Designed BLS
Drawn BLS
Approved EDC

Sheet No.
E3.2

8/29/2016 5:16:54 P:\E13\E13-1941 Chefornak Washeteria\050 DWG\E13-1941_Chefornak_Washeteria.rvt
8/08/2016 10:24:19 : fe-1 : mehd : s20fschd : hvsOnlyht : 0.834,735.5/1378

REMOTE MONITORING EQUIPMENT

TAG	DESCRIPTION	FUNCTION	MANUFACTURER/PART #
CPM-1	CELL PHONE MODEM	RECEIVES SENSOR DATA FROM ETHERNET GATEWAY AND SENDS IT OVER LOCAL CELL NETWORK TO MONNIT CLOUD	MONNIT CLOUD GATE CELL PHONE MODEM
EG-1	ETHERNET GATE	GATHERS WIRELESS SENSOR DATA AND SENDS IT TO CELL PHONE MODEM	MONNIT ETHERNET GATEWAY
W-RMCS-1	WIRELESS SENSOR	NOTES BOILER 1 ON TIME THROUGH CONTACT SWICTH ON BOILER CONTROL	MONNIT #MNS-9-CF-W1-LD
W-RMCS-2	WIRELESS SENSOR	NOTES BOILER 2 ON TIME THROUGH CONTACT SWICTH ON BOILER CONTROL	MONNIT #MNS-9-CF-W1-LD
W-RMCS-3	WIRELESS SENSOR	NOTES BOILER 3 ON TIME THROUGH CONTACT SWICTH ON BOILER CONTROL	MONNIT #MNS-9-CF-W1-LD
W-RMCS-4	WIRELESS SENSOR	NOTES BOILER 4 ON TIME THROUGH CONTACT SWICTH ON BOILER CONTROL	MONNIT #MNS-9-CF-W1-LD
W-RMLS-1	WIRELESS SENSOR	MEASURES LEVEL IN WATER TANKS IN GALLONS THROUGH 4-20mA SIGNAL FROM LC-1 ON WT-1	MONNIT #MNS-9-MA-W1-LD
W-RMPS-1	WIRELESS SENSOR	MEASURES WATER SYSTEM PRESSURE FROM 4-20mA LOOP SIGNAL OFF PRESSURE TRANSMITTER FROM PMP-6A OR B	MONNIT #MNS-9-MA-W1-LD
W-RMTS-1	WIRELESS SENSOR	MEASURES TANK WATER TEMPERATURE OUT OF TANK ON 3-IN SS MANIFOLD PIPING IN VALVE BOX	MONNIT #MNS-9-WT-W1-LD
W-RMTS-2	WIRELESS SENSOR	MEAUSRES OUTSIDE AIR TEPERATURE WITH 3-FT LONG REMOTE PROBE	MONNIT #MNS-9-TS-W1-LD
W-RMTS-3	WIRELESS SENSOR	MEASURES HYDRONIC LOOP SUPPLY TEMPERATURE	MONNIT #MNS-9-WT-W1-LD
W-RMTS-4	WIRELESS SENSOR	MEASURES HYDRONIC LOOP RETURN TEMPERATURE	MONNIT #MNS-9-WT-W1-LD

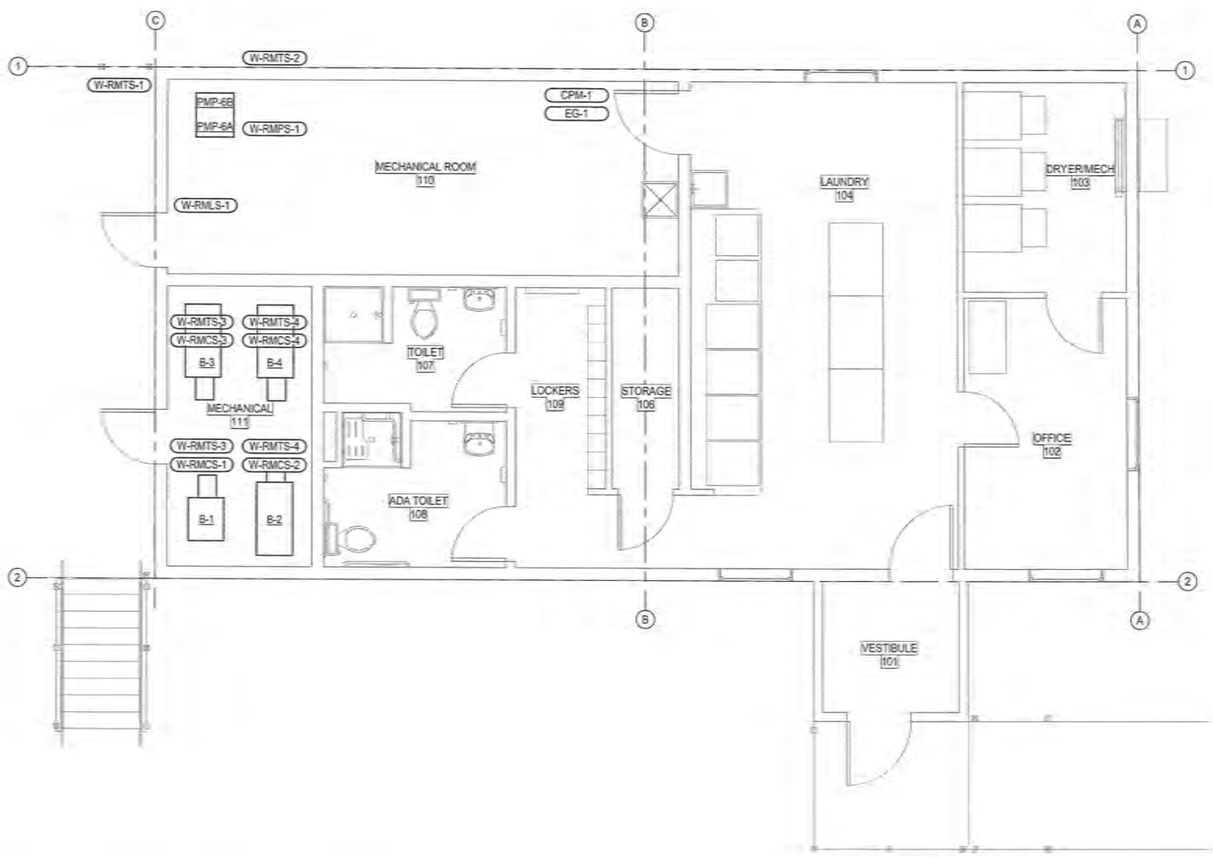

1 WASHETERIA ANTHC REMOTE MONITORING PLAN
E4.1 SCALE: 1/4" = 1'-0"

GENERAL NOTES

1. IN MANY NEW VILLAGE SAFE WATER PROJECTS, REMOTE SENSORS ARE BEING INSTALLED TO REMOTELY MONITOR CRITICAL OPERATIONAL PARAMETERS IN A CLOUD SYSTEM. THE ALASKA NATIVE TRIBAL HEALTH CONSORTIUM (ANTHC) IS SET UP WITH A STANDARD SET OF SENSORS, ETHERNET GATEWAYS, AND CELL PHONE MODEMS TO TRANSMIT THESE PARAMETERS. THE CLOUD DATA IS USED TO PRODUCE REPORTS AND GENERATE ALERTS FOR INTERESTED PARTIES, SUCH AS AREA REMOTE MAINTENANCE WORKS (RMWs) AND PROJECT ENGINEERS.
2. ANTHC HAS STANDARDIZED THEIR REMOTE MONITORING SENSORS AND OTHER DEVICES TO THAT OF MONNIT CORP. IN THE FUTURE, ANTHC MAY BE TASKED TO INSTALL THIS SYSTEM AT THE CHEFORNAK WASHETERIA. THIS PLAN IS MEANT AS A REFERENCE AS TO WHAT THAT SYSTEM WOULD ENTAIL.

EIC ENGINEERS, INC
ELECTRICAL ENGINEERS
EIC JOB NO: E13-1941
6927 OLD SEWARD HWY
SUITE 200
ANCHORAGE, AK 99518
T 907.349.9772
F 907.349.9713
www.eicengr.com

SCALE:

BAR IS ONE INCH ON ORIGINAL DRAWING 1"
IF NOT ONE INCH ON THIS SHEET, ADJUST SCALES ACCORDINGLY

CONSTRUCTION RECORD
FIELD BOOK
STAKING
FOREMAN
AS-BUILT
INSPECTOR

STATE OF ALASKA 49TH PROFESSIONAL ENGINEER
PRELIMINARY NOT FOR CONSTRUCTION

WASHETERIA AND WATER TANK
WASHETERIA REMOTE MONITORING PLAN
CHEFORNAK, ALASKA

CE2 ENGINEERS, INC.
PO BOX 230266 ANCHORAGE, AK 99523 PH: 907-345-1010 FAX: 907-345-1015

NU	REVISION DESCRIPTION
M	

Project No. E13-1941
Date AUGUST 2016
Designed BLS
Drawn BLS
Approved EDC

Sheet No.
E4.1

8/29/2016 5:16:54 P:\E13\E13-1941 Chefornak Washeteria\050 DWG\E13-1941_Chefornak_Washeteria.rvt
[[Mon/29/2016 16:24:39 (C-1 parte1 >20%sel) WOONIT 15.0.347.35.41378

DETAIL EQUIPMENT

1. SERVICE METER/MAIN - SE RATED, NEMA 4, 200A MAIN CB, 208/120V, 3PH, 4W. CIRCLE AW OR EQUIVALENT.
2. PANEL 'A1' - NEMA 1, 225A, 208Y/120V, 3PH, 4W, 42 SPACE. SQUARE D TYPE NQOD OR EQUIVALENT. PROVIDE WITH TRANSIENT VOLTAGE SURGE SUPPRESSION (TVSS).
3. PANEL 'A2' - NEMA 1, 225A, 208Y/120V, 3PH, 4W, 42 SPACE. SQUARE D TYPE NQOD OR EQUIVALENT.
4. MANUAL TRANSFER SWITCH 'MTS-1' - NEMA 1, 200A, 208Y/120V, 3PH, 4W, 4-POLE. ASCO OR EQUIVALENT.
5. PORTABLE GENERATOR RECEPTACLE- 200A, 208Y/120V, 3PH, 5W, 4-POLE WEATHER PROOF PIN & SLEEVE TYPE. HUBBELL OR EQUIVALENT.

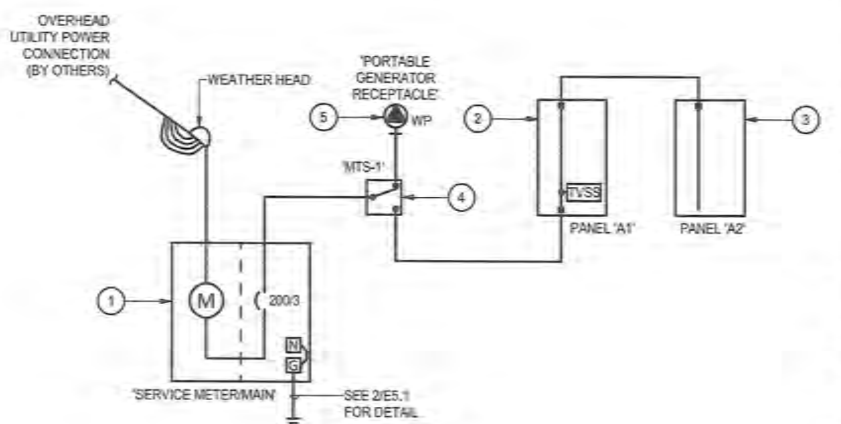

1 / E5.1 WASHETERIA POWER ONE-LINE DIAGRAM
SCALE: NONE

FEEDER SCHEDULE		
ID	AMPERAGE	FEEDER (MINIMUM) CU UON
SERVICE METER/MAIN	200	2"C, (4)3/0 AWG, (1)4 AWG BJ
MTS-1	200	2"C, (4)3/0 AWG, (1)6 AWG EGC
PORTABLE GENERATOR RECEPTACLE	200	2"C, (4)3/0 AWG, (1)6 AWG EGC
A1	200	2"C, (4)3/0 AWG, (1)6 AWG EGC
A2	200	2"C, (4)3/0 AWG, (1)6 AWG EGC

EQUIPMENT SCCR SCHEDULE

ALL EQUIPMENT TO HAVE SCCR EXCEEDING THE AVAILABLE SCA AT THE CALCULATED X/R RATIO. WHERE X/R RATIO IS GREATER THAN THE INDUSTRY STANDARD TEST X/R RATIOS THE APPROPRIATE MULTIPLICATION FACTOR SHALL BE APPLIED TO PROPERLY RATE THE EQUIPMENT. DOWNSTREAM BRANCH CIRCUIT EQUIPMENT AND ASSOCIATED CIRCUIT BREAKER RATINGS MAY BE SATISFIED BY USING FULLY RATED EQUIPMENT OR MANUFACTURER TESTED COMBINATIONS PER NEC 240.86(B) TO SERIES RATE FOR THE AVAILABLE SCA AT EQUIPMENT. ALL SERIES RATED EQUIPMENT TO BE CLEARLY LABELED & IDENTIFIED PER NEC 110.22(C). SERIES RATED EQUIPMENT MOTOR LOADS CANNOT EXCEED 1% OF AIC RATING PER NEC 240.86(C).

CONTRACTOR TO VERIFY ACTUAL EQUIPMENT TO BE PROVIDED WITH SERVING UTILITY PRIOR TO EQUIPMENT PROCUREMENT. ANY DECREASE OF TRANSFORMER %Z, CONDUCTOR LENGTHS, OR INCREASE IN TRANSFORMER KVA OR CABLE SIZES TO BE REPORTED TO CONTRACT OFFICER FOR RECALCULATION OF AVAILBLE FAULT CURRENT PRIOR TO PROCUREMENT OF EQUIPMENT. PROVIDE WARNING PLACARD INSTALLED ON SERVICE DISCONNECT PER NEC 110.24 DENOTING ALL PROJECT PARAMETERS REQUIRED BY NEC.

ASSUMED UTILITY SYSTEM CONFIGURATION (BASIS FOR CALCULATION)

SERVICE TRANSFORMER				
KVA	%Z	X/R	SCA (PRI.)	SCA (SEC.)
75	1.20	2.50	1,000,000	17,343

SERVICE AMPS	- FOR FAULT CURRENT CALCULATION ONLY - SERVICE LATERAL	FT
200	2"C, (4)3/0 AWG, (1)4 AWG BJ	15

EQUIPMENT ID	SCAmps	X/R
SERVICE METER/MAIN	15,885	1.95
MTS-1	12,658	1.41
A1	12,138	1.35
A2	11,932	1.32

DETAIL NOTES:

1. BOND ALL PIPING AND BUILDING DISCONTINUITIES TO PROVIDE AN ELECTRICALLY CONTINUOUS SYSTEM. PROVIDE BOND JUMPER EQUAL TO GROUNDING ELECTRODE CONDUCTOR.
2. PROVIDE RACEWAY FOR ALL CONDUCTORS. RACEWAYS TO BE METALLIC IN PLENUM AIR SPACES. WHERE METALLIC RACEWAY IS USED, BOND EACH END TO THE CONDUCTOR.
3. ALL CONDUCTOR SIZES NOTED ARE IN COPPER.

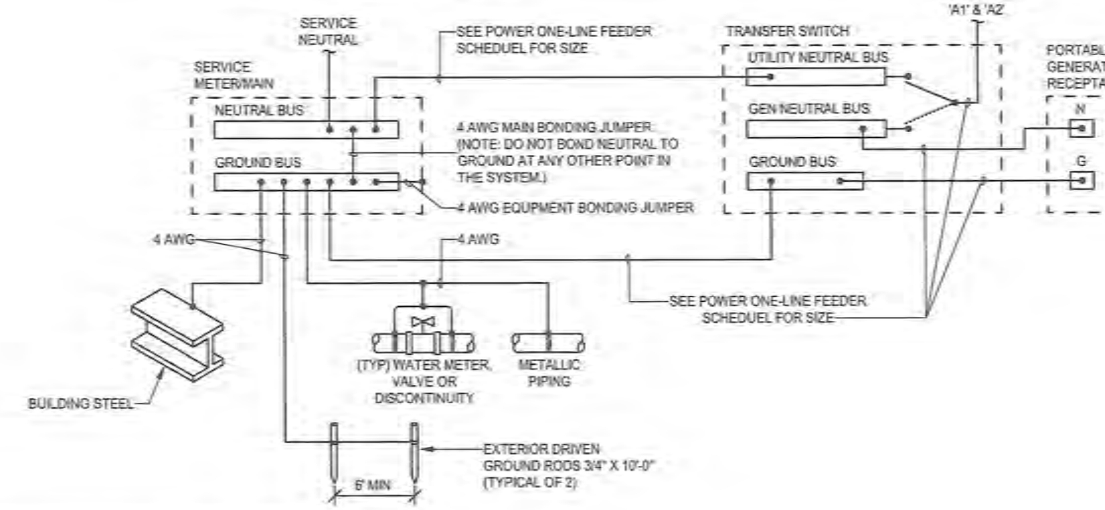

2 / E5.1 WASHETERIA GROUNDING SYSTEM DIAGRAM
SCALE: NONE

PANEL "A1" SCHEDULE

VOLTAGE: 208Y/120V, 3PH, 4W
OPD RATING: 200 A
MAIN: MLO W/ SUB-FEED LUGS
LOCATION: MECHANICAL ROOM 110
ENCLOSURE: NEMA 1
MOUNTING: SURFACE

CKT	LOAD DESCRIPTION	AMP	P	A	A	B	B	C	C	P	AMP	LOAD DESCRIPTION	CKT
1	REC: RM 104	20	1	0.72	0.66					1	20	LTG: RM 101,104,105,106,109	2
3	MTR: RM 102,104 UH-4,UH-8,UH-9	20	1			0.82	0.36			1	20	MTR/LTG: RM 1 s,CF-1,CF-2,CF-4	4
5	REC: RM 102,103	20	1					0.90	0.00	1	20	SPARE	6
7	MTR/REC: RM 101 UH-6 EXTERIOR	20	1	0.46	0.00					1	20	SPARE	8
9	MTR: RM 103 UH-1	15	1			0.86	0.00			1	20	SPARE	10
11	MTR: RM 103 UH-2	15	1					0.86	0.00	1	20	SPARE	12
13	MTR: RM 103 UH-3	15	1	0.86	0.00					1	20	SPARE	14
15	SPARE	20	1			0.00	0.00			1	20	SPARE	16
17	SPARE	20	1					0.00	0.00	1	20	SPARE	18
19	SPARE	20	1	0.00	0.00					1	20	SPARE	20
21	SPARE	20	1			0.00	0.00			1	20	SPARE	22
23	NCNT: RM 104 WM-1 20# WASHER	20	1					1.80	0.00	1	20	SPARE	24
25	NCNT: RM 104 WM-2 20# WASHER	20	1	1.80	0.77					3	15	NCNT: R CD-1 30# STACKED DRYER	26
27	NCNT: RM 104 WM-3 30# WASHER	15	2			1.04	0.77			–	–	–	28
29	–	–	–					1.04	0.77	–	–	–	30
31	NCNT: RM 104 WM-4 30# WASHER	15	2	1.04	0.77					3	15	NCNT: R CD-2 30# STACKED DRYER	32
33	–	–	–			1.04	0.77			–	–	–	34
35	NCNT: RM 104 WM-5 30# WASHER	15	2					1.04	0.77	–	–	–	36
37	–	–	–	1.04	0.77					3	15	NCNT: R CD-3 30# STACKED DRYER	38
39	NCNT: RM 104 WM-6 30# WASHER	15	2			1.04	0.77			–	–	–	40
41	–	–	–					1.04	0.77	–	–	–	42
	TOTAL KVA/PHASE:			15.2		17.8		17.7					
	TOTAL AMPS/PHASE:			126.3		151.3		150.7					
	PHASE BALANCE %: A-B | B-C | C-A			15		0		15					

SUMMARY BY LOAD TYPE

LOAD CLASSIFICATION	CONNECTED	NEC FACTORS	TOTAL NEC
CONT	0.500 kVA	125.00%	0.625 kVA
LTG	1.290 kVA	125.00%	1.613 kVA
MTR	25.658 kVA	103.72%	26.613 kVA
NCNT	18.850 kVA	100.00%	18.850 kVA
REC	4.320 kVA	100.00%	4.320 kVA

PANEL TOTALS	
CONNECTED KVA:	50.618 kVA
NEC CALCULATED KVA:	52.021 kVA
CONNECTED AMPS:	141 A
NEC CALCULATED AMPS:	144 A

PANEL "A2" SCHEDULE

VOLTAGE: 208Y/120V, 3PH, 4W
OPD RATING: 200 A
MAIN: MLO
LOCATION: MECHANICAL ROOM 110
ENCLOSURE: NEMA 1
MOUNTING: SURFACE

CKT	LOAD DESCRIPTION	AMP	P	A	A	B	B	C	C	P	AMP	LOAD DESCRIPTION	CKT
1	REC: RM 111 EXTERIOR	20	1	0.54	0.27					1	20	LTG: RM 110,111	2
3	MTR: RM 111 B-1	15	1			0.60	0.12			1	20	LTG: EXTERIOR	4
5	MTR: RM 111 B-2	15	1					0.60	0.34	1	20	MTR/REC/LTG: RM 107,108 UH-10	6
7	MTR: RM 111 B-3	15	1	0.60	0.34					1	20	MTR/REC/LTG: RM 107,108 UH-11	8
9	MTR: RM 111 B-4	15	1			0.60	0.90			1	20	REC: RM 110	10
11	MTR: RM 111 BRF-1	15	1					0.86	0.80	1	20	MTR: RM 110,11 ,CF-3,UH-5,UH-7	12
13	MTR/REC: RM 105,106,109 UH-12	20	1	0.64	0.35					1	20	MTR: RM 110 EF-1,EF-2,EF-3	14
15	SPARE	20	1			0.00	0.86			1	15	MTR: RM 110 MUF-1	16
17	SPARE	20	1					0.00	0.00	1	20	SPARE	18
19	SPARE	20	1	0.00	0.00					1	20	SPARE	20
21	SPARE	20	1			0.00	0.00			1	20	SPARE	22
23	SPARE	20	1					0.00	0.00	1	20	SPARE	24
25	SPARE	20	1	0.00	0.00					1	20	SPARE	26
27	MTR: RM 110 PMP-4A,PMP-4B,PMP-7	20	1			1.32	0.00			1	20	SPARE	28
29	MTR: RM 110 PMP-8	20	1					0.53	0.00	1	20	SPARE	30
31	MTR: RM 110 PMP-1A,PMP-1B	20	1	0.48	0.50					1	20	CONT: RM 106 WLC-1	32
33	MTR: RM 110 PMP-2A,PMP-2B	20	2			2.16	1.18			1	20	MTR: TCP-1 WATER TANK	34
35	–	–	–					2.16	0.86	1	20	MTR: RM 110 DT-1	36
37	MTR: RM 110 PMP-6A,PMP-6A VFD	20	3	1.27	1.27					3	20	MTR: RM 110 PMP-6B,PMP-6B VFD	38
39	–	–	–			1.27	1.27			–	–	–	40
41	–	–	–					1.27	1.27	–	–	–	42
	TOTAL KVA/PHASE:			6.3		10.3		8.7					
	TOTAL AMPS/PHASE:			52.2		88.9		75.6					
	PHASE BALANCE %: A-B | B-C | C-A			48		19		29					

SUMMARY BY LOAD TYPE

LOAD CLASSIFICATION	CONNECTED	NEC FACTORS	TOTAL NEC
CONT	0.500 kVA	125.00%	0.625 kVA
LTG	0.505 kVA	125.00%	0.631 kVA
MTR	21.912 kVA	104.36%	22.867 kVA
REC	2.340 kVA	100.00%	2.340 kVA

PANEL TOTALS	
CONNECTED KVA:	25.257 kVA
NEC CALCULATED KVA:	26.463 kVA
CONNECTED AMPS:	70 A
NEC CALCULATED AMPS:	73 A

PANEL SCHEDULE NOTES	
REF	NOTE
'KEY'	'(x)' DENOTES A GENERAL, NON-REFERENCED, NOTE. NUMBERED NOTES ARE REFERENCED FROM THE PANEL SCHEDULES DENOTED BY '[#]'. (NOT ALL NUMBERED NOTES ARE REFERENCED.)
(A)	REFER TO EQUIPMENT SCCR SCHEDULE FOR PANEL SHORT CIRCUIT RATINGS.
[1]	EXISTING LOAD TO REMAIN.
[2]	NEW LOAD ON EXISTING BREAKER.
[3]	PROVIDE CIRCUIT BREAKER FOR NEW LOAD.
[4]	PROVIDE 30mA GFPE CIRCUIT BREAKER.
[5]	PROVIDE OEM DEVICE THAT CAN BE LOCKED IN THE "OFF" POSITION FOR USE AS DISCONNECT PER NEC.

LOAD CLASSIFICATIONS SCHEDULE

NOTES	
(KEY)	'(x)' DENOTES A GENERAL, NON-REFERENCED, NOTE. NUMBERED NOTES ARE REFERENCED IN THE SCHEDULE.
(A)	NOT ALL LOAD CLASSIFICATIONS ARE NECESSARILY USED. ONLY CLASSIFICATIONS FROM LOADS THAT ARE CONNECTED TO EACH PANEL ARE SHOWN IN THE SUMMARY SECTION OF THE PANEL SCHEDULES.
(B)	PANELBOARD BUS RATINGS TO EQUAL OR EXCEED OPD RATINGS SHOWN IN PANEL SCHEDULES UNLESS OTHERWISE.
1	THE NEC DEMAND PERCENTAGE IS SHOWN AS A WEIGHTED AVERAGE. FOR EXAMPLE 125% OF 100VA PLUS 100% OF 100VA WILL SHOW THE WEIGHTED AVERAGE PERCENTAGE OF 112.5% RESULTING IN 225VA.

SCHEDULE

CLASS.	NEC REFERENCE	DESCRIPTION
CONT	NEC 2014: 210.20(A)	125% OF THE CONTINUOUS LOAD
ETR	NEC 2014: 220.87	RECORDED DEMAND LOAD * 125%
LTG	NEC 2014: 210.20(A)	LIGHTING LOADS CONSIDERED TO BE CONTINUOUS. 125% OF THE CONTINOUS LOAD.
MTR	NEC 2014: 430.24	125% OF THE FULL-LOAD CURRENT RATING OF THE HIGHTEST RATED MOTOR PLUS THE SUM OF THE FULL-LOAD CURRENT RATINGS OF ALL OTHER MOTORS. (SEE NOTE 1)
NCDN	NEC 2014: 220.60	NONCOINCIDENT LOADS: WHERE IT IS UNLIKELY THAT TWO OR MORE NONCOINCIDENT LOADS WILL BE IN USE SIMULTANEOUSLY, THE LARGEST LOAD WILL BE USED. LOADS CLASSIFIED AS NCDN WILL HAVE ZERO LOAD.
NCNT	NEC 2014: 210.20(A)	100% OF THE NON-CONTINUOUS LOAD
REC	NEC 2014: 220.44	NON-DWELLING RECEPTACLE LOADS = FIRST 10KVA OR LESS AT 100% PLUS REMAINDER OVER 10KVA AT 50%. (SEE NOTE 1)
MCA	(SEE MTR)	THE LOAD IS BASED ON THE GIVEN MCA (MINIMUM CIRCUIT AMPACITY) WHICH INCLUDES 125% OF THE LARGEST MOTOR OF THE UNIT. 100% OF THE MCA LOAD.

EIC ENGINEERS, INC
ELECTRICAL ENGINEERS
EIC JOB NO: E13-1941
6927 OLD SEWARD HWY
SUITE 200
ANCHORAGE, AK 99518
T 907.349.9712
F 907.349.9713
www.eiceng.com

SCALE:

BAR IS ONE INCH ON ORIGINAL DRAWING
IF NOT ONE INCH ON THIS SHEET, ADJUST SCALES ACCORDINGLY

CONSTRUCTION RECORD
FIELD BOOK
STAKING
FOREMAN
AS-BUILT
INSPECTOR

WASHETERIA AND WATER TANK
ELECTRICAL POWER DIAGRAMS & DETAILS
CHEFORNAK, ALASKA

CE2 ENGINEERS, INC.
PO BOX 232946 ANCHORAGE, AK 99523 PH: 907-349-1010 FAX: 907-349-1015

REVISION
NUM | DESCRIPTION

Project No. E13-1941
Date AUGUST 2016
Designed BLS
Drawn BLS
Approved EDC

Sheet No.
E5.1

8/29/2016 5:16:57 P:\E13\E13-1941 Chefornak Washeteria\050 DWG\E13-1941_Chefornak_Washeteria.rvt
RM08/29/2016 16:24:39 : fc-1 : pschd : >20lschd : lvisOnSht : 0.8;34.7;35.5/1378

REFERENCED DETAIL NOTES (#)

1. DEMOLISH 25A 3-POLE CIRCUIT BREAKER. CIRCUIT BREAKER TO BE REPLACED.
2. DEMOLISH 15KVA TRANSFORMER AND FEEDERS. TRANSFORMER TO BE REPLACED.

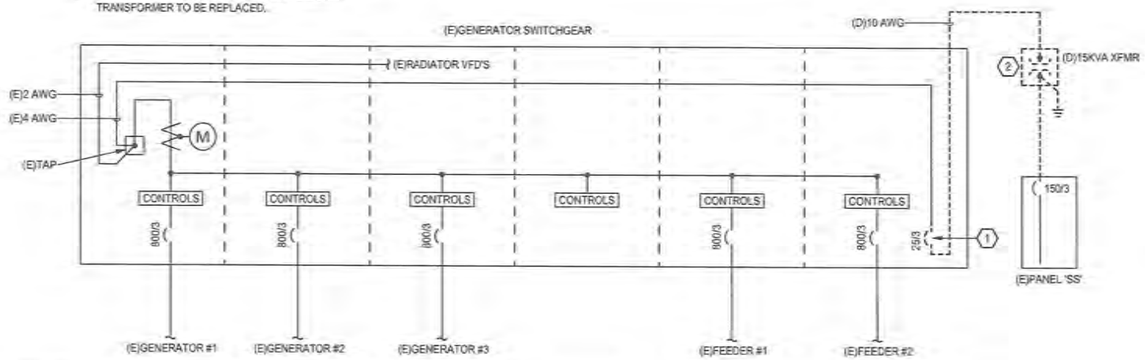

1 E5.2 POWER PLANT DEMOLITION WORK POWER ONE-LINE DIAGRAM
SCALE: NONE

REQUIRED MINIMUM CONDUCTOR SIZE COPPER CONDUCTORS	
XFMR SECONDARY	JUMPER OR ELECTRODE
1/0 AWG OR SMALLER	6 AWG
2/0 AWG - 3/0 AWG	4 AWG
> 3/0 AWG - 350 KCMIL	2 AWG
> 350 KCMIL - 600 KCMIL	1/0 AWG
> 600 KCMIL - 1100 KCMIL	2/0 AWG
> 1100 KCMIL	12.5% * XFMR SECONDARY

REQUIRED MINIMUM CONDUCTOR SIZE ALUMINUM OR COPPER-CLAD CONDUCTORS	
XFMR SECONDARY	JUMPER OR ELECTRODE
3/0 AWG OR SMALLER	4 AWG
> 3/0 AWG - 250 KCMIL	2 AWG
> 250 KCMIL - 500 KCMIL	1/0 AWG
> 500 KCMIL - 900 KCMIL	3/0 AWG
> 900 KCMIL - 1750 KCMIL	4/0 AWG
> 1750 KCMIL	12.5% * XFMR SECONDARY

"XFMR SECONDARY" DENOTES THE AREA OF THE LARGEST UNGROUNDED SECONDARY CONDUCTOR OR EQUIVALENT AREA FOR PARALLEL SECONDARY CONDUCTORS.
">" DENOTES GREATER THAN.

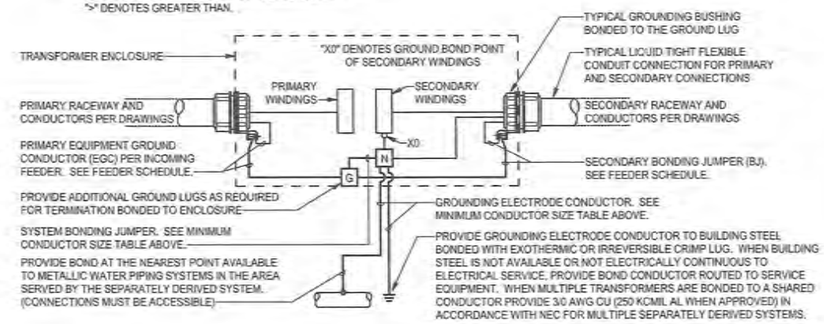

3 E5.2 TYPICAL TRANSFORMER GROUNDING DIAGRAM
SCALE: NONE

PANEL SCHEDULE NOTES	
REF	NOTE
KEY	'(x)' DENOTES A GENERAL, NON-REFERENCED, NOTE. NUMBERED NOTES ARE REFERENCED FROM THE PANEL SCHEDULES DENOTED BY '[#]'. (NOT ALL NUMBERED NOTES ARE REFERENCED.)
(A)	REFER TO EQUIPMENT SCCR SCHEDULE FOR PANEL SHORT CIRCUIT RATINGS.
[1]	EXISTING LOAD TO REMAIN.
[2]	NEW LOAD ON EXISTING BREAKER.
[3]	PROVIDE CIRCUIT BREAKER FOR NEW LOAD.
[4]	PROVIDE 30mA GFPE CIRCUIT BREAKER.
[5]	PROVIDE OEM DEVICE THAT CAN BE LOCKED IN THE "OFF" POSITION FOR USE AS DISCONNECT PER NEC.

LOAD CLASSIFICATIONS SCHEDULE	
NOTES	
(KEY)	'(x)' DENOTES A GENERAL, NON-REFERENCED, NOTE. NUMBERED NOTES ARE REFERENCED IN THE SCHEDULE.
(A)	NOT ALL LOAD CLASSIFICATIONS ARE NECESSARILY USED. ONLY CLASSIFICATIONS FROM LOADS THAT ARE CONNECTED TO EACH PANEL ARE SHOWN IN THE SUMMARY SECTION OF THE PANEL SCHEDULES.
(B)	PANELBOARD BUS RATINGS TO EQUAL OR EXCEED OPD RATINGS SHOWN IN PANEL SCHEDULES UNLESS OTHERWISE...
1	THE NEC DEMAND PERCENTAGE IS SHOWN AS A WEIGHTED AVERAGE. FOR EXAMPLE 125% OF 100VA PLUS 100% OF 100VA WILL SHOW THE WEIGHTED AVERAGE PERCENTAGE OF 112.5% RESULTING IN 225VA.

SCHEDULE		
CLASS.	NEC REFERENCE	DESCRIPTION
CONT	NEC 2014: 210.20(A)	125% OF THE CONTINUOUS LOAD
ETR	NEC 2014: 220.87	RECORDED DEMAND LOAD * 125%
LTG	NEC 2014: 210.20(A)	LIGHTING LOADS CONSIDERED TO BE CONTINUOUS. 125% OF THE CONTINOUS LOAD.
MTR	NEC 2014: 430.24	125% OF THE FULL-LOAD CURRENT RATING OF THE HIGHTEST RATED MOTOR PLUS THE SUM OF THE FULL-LOAD CURRENT RATINGS OF ALL OTHER MOTORS. (SEE NOTE 1)
NCDN	NEC 2014: 220.60	NONCOINCIDENT LOADS: WHERE IT IS UNLIKELY THAT TWO OR MORE NONCOINCIDENT LOADS WILL BE IN USE SIMULTANEOUSLY, THE LARGEST LOAD WILL BE USED. LOADS CLASSIFIED AS NCDN WILL HAVE ZERO LOAD.
NCNT	NEC 2014: 210.20(A)	100% OF THE NON-CONTINUOUS LOAD
REC	NEC 2014: 220.44	NON-DWELLING RECEPTACLE LOADS = FIRST 10KVA OR LESS AT 100% PLUS REMAINDER OVER 10KVA AT 50%. (SEE NOTE 1)
MCA	(SEE MTR)	THE LOAD IS BASED ON THE GIVEN MCA (MINIMUM CIRCUIT AMPACITY) WHICH INCLUDES 125% OF THE LARGEST MOTOR OF THE UNIT. 100% OF THE MCA LOAD.

DETAIL EQUIPMENT

1. CIRCUIT BREAKER - 70A, 3-POLE, 480V, 65kAIC, GENERAL ELECTRIC TYPE SPECTRA RMS.
2. TRANSFORMER TSS: 45KVA, 480V DELTA PRIMARY, 208/120V WYE SECONDARY, NEMA 1 ENCLOSURE. SQUARE D EX SERIES OR EQUIVALENT.

REFERENCED DETAIL NOTES (#)

1. UTILIZE SPARE/SPACE IN EXISTING PANEL FOR NEW POWER PLANT BRANCH CIRCUITS. SEE PANEL SCHEDULE FOR DETAIL.

FEEDER SCHEDULE		
ID	AMPERAGE	FEEDER (MINIMUM) CU UON
TSS	70	1.25"C, (3)#4 AWG, (1)8 AWG EGC
SS	150	2"C, (4)1/0 AWG, (1)6 AWG BJ

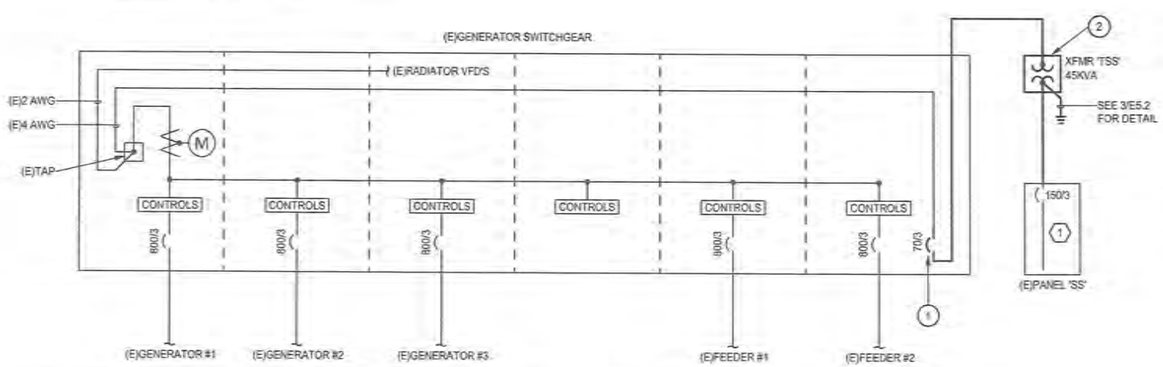

2 E5.2 POWER PLANT NEW WORK POWER ONE-LINE DIAGRAM
SCALE: NONE

(E)PANEL "SS" SCHEDULE

VOLTAGE: 208V/120V, 3PH, 4W
OPD RATING: 150 A
MAIN: MCB
LOCATION:
ENCLOSURE: NEMA 1
MOUNTING: SURFACE

CKT	LOAD DESCRIPTION	AMP	P	A		B		C		P	AMP	LOAD DESCRIPTION	CKT
1	MTR: EF-1 [1]	20	2	0.92	3.83					3	40	NCNT: FUEL SYSTEM CONTROL [1]	2
3	--	--	--			0.92	3.83			--	--	--	4
5	MTR: EF-2 [1]	20	2					0.00	3.83	--	--	--	6
7	--	--	--	0.00	1.00					1	15	NCNT: INTER. TANK CONTROL [1]	8
9	MTR: EF-3 [1]	20	2			0.00	1.18			1	20	MTR: USED OIL PUMP P-U01 [1]	10
11	--	--	--					0.00	1.59	1	20	MTR: UH-1& P-HR1 [1]	12
13	CONT: BATTERY CHARGER #1 [1]	20	1	1.50	1.00					1	20	MTR: P-HR2 & P-HR3 [1]	14
15	CONT: BATTERY CHARGER #2 [1]	20	1			1.50	0.00			1	20	SPARE	16
17	CONT: BATTERY CHARGER #3 [1]	20	1					1.50	1.08	1	20	REC: GENERATOR RM [1]	18
19	LTG: GENERATOR RM A [1]	20	1	1.00	0.92					1	20	REC: CONTROL RM [1]	20
21	LTG: GENERATOR RM B [1]	20	1			1.00	0.00			1	20	SPARE	22
23	LTG: CONTROL ROOM [1]	20	1					0.50	1.22	1	20	REC/LTG: SWITCHGEAR RMs [1]	24
25	MTR: AIR COMPRESSOR [1]	30	2	1.95	0.50					1	20	NCNT: FIRE SUPPRESSION CON [1]	26
27	--	--	--			1.95	1.18			1	20	MTR: COMBUSTION AIR [1]	28
29	CONT: UTILIDOR HEAT TRACE [3][4]	20	1					1.00	0.42	2	15	MTR: PMP-3 [3]	30
31	SPARE	20	1	0.00	0.42					--	--	--	32
33	MTR: PMP-5 [3]	15	3			0.29	0.00			1	20	SPARE	34
35	--	--	--					0.29	0.00	1	20	SPARE	36
37	--	--	--	0.29	0.00					1	20	SPARE	38
39	SPARE	20	2			0.00	0.00			2	20	SPARE	40
41	--	--	--					0.00	0.00	--	--	--	42
	TOTAL KVA/PHASE:			13.3		11.8		11.3					
	TOTAL AMPS/PHASE:			111.5		99.3		94.5					
	PHASE BALANCE %: A-B | B-C | C-A			12		4		15					

SUMMARY BY LOAD TYPE

LOAD CLASSIFICATION	CONNECTED	NEC FACTORS	TOTAL NEC
CONT	5.500 kVA	125.00%	6.875 kVA
LTG	3.000 kVA	125.00%	3.750 kVA
MTR	12.276 kVA	107.52%	13.249 kVA
NCNT	13.000 kVA	100.00%	13.000 kVA
REC	2.700 kVA	100.00%	2.700 kVA

PANEL TOTALS	
CONNECTED KVA:	36.476 kVA
NEC CALCULATED KVA:	39.574 kVA
CONNECTED AMPS:	101 A
NEC CALCULATED AMPS:	110 A

E.I.C. ENGINEERS, INC
ELECTRICAL CONSULTANTS
6927 OLD SEWARD HWY
SUITE 200
ANCHORAGE, AK 99518
T 907.349.9712
F 907.349.9713
www.eicengs.com

EIC JOB NO: E13-1941

SCALE:

PAR IN ONE PLOT OF ORIGINAL DRAWING "F"
IF NOT ONE INCH ON THIS SHEET, ADJUST SCALES ACCORDINGLY

CONSTRUCTION RECORD
FIELD BOOK
STAKING
FOREMAN
AS-BUILT
INSPECTOR

STATE OF ALASKA
PRELIMINARY NOT FOR CONSTRUCTION
BRIAN L. SCHMIDT
CE-9973
ENGINEER

WASHETERIA AND WATER TANK
ELECTRICAL POWER DIAGRAMS & DETAILS
CHEFORNAK, ALASKA

CE2 ENGINEERS, INC.
PO BOX 202941 ANCHORAGE, AK 99520 PH: 907-349-1019 FAX: 907-349-1015

REVISION		
NUM	DESCRIPTION	

Project No. E13-1941
Date AUGUST 2016
Designed BLS
Drawn BLS
Approved EDC

Sheet No. E5.2

8/29/2016 5:16:58 P:\E13\E13-1941 Chefornak Washeteria\050 DWG\E13-1941_Chefornak_Washeteria.rvt
[illegible] 16:24:39 [illegible] pm hrt -2016chd 1 WASHSRT: 0.8;34.7;35.57;1978

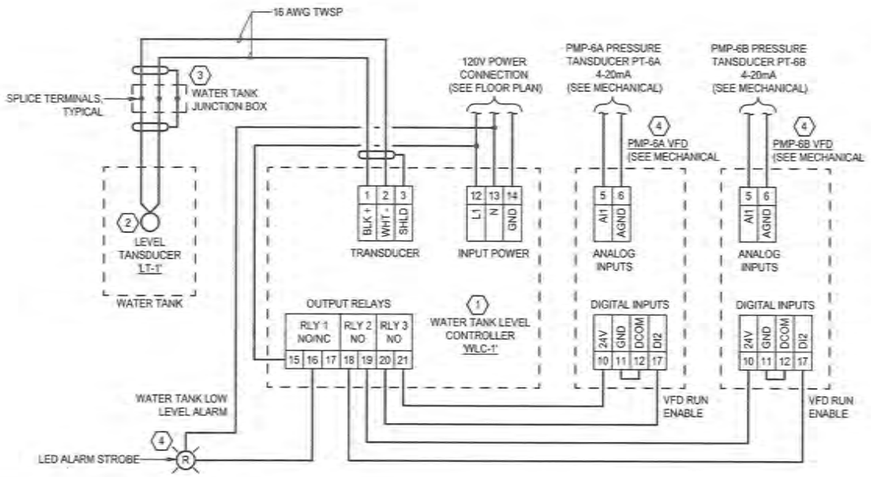

1 WATER TANK LEVEL CONTROLS
E6.1 SCALE: NONE

REFERENCED DETAIL NOTES (#)

1. BASIS OF DESIGN FOR 'WLC-1' WATER TANK LEVEL CONTROLLER: SIEMENS #SITRANS LUT400.
2. BASIS OF DESIGN FOR WATER 'LT-1' TANK LEVEL TRANSDUCER: SIEMENS #XRS-5 ECHOMAX ULTRASONIC TRANSDUCER.
3. PROVIDE WEATHERPROOF JUNCTION BOX WITH TERMINAL STRIP AT TOP OF WATER TANK FOR TRANSITIONING BETWEEN TRANSDUCER CABLE AND BUILDING CONTROL WIRING.
4. BASIS OF DESIGN FOR VFD: ABB #ACQ550. COORDINATE EXACT WIRING WITH VFD SPECIFIED AND PROVIDED BY MECHANICAL. INTENT IS TO WIRE VFD TO 'WLC-1' TANK LEVEL CONTROLLER SO THAT VFD WILL NOT ENABLE UNLESS THERE IS ADEQUATE TANK WATER LEVEL.
5. PROVIDE WEATHERPROOF 120V LED ALARM STROBE AT BUILDING EXTERIOR AND LABEL 'WATER TANK LOW LEVEL ALARM'. COORDINATE EXACT LOCATION WITH OWNER.

EIC ENGINEERS, INC
ELECTRICAL ENGINEERS
EIC JOB NO: E13-1941
6927 OLD SEWARD HWY
SUITE 200
ANCHORAGE, AK 99518
T 907.349.9712
F 907.349.9713
www.eicemp.com

SCALE:

BAR IS ONE INCH ON ORIGINAL DRAWING. IF NOT ONE INCH ON THIS SHEET, ADJUST SCALES ACCORDINGLY

CONSTRUCTION RECORD
FIELD BOOK
STANRIG
FOREMAN
AS-BUILT
INSPECTOR

STATE OF ALASKA
BRIAN L. SPERL
EIC ENGINEERS, INC.
NOT FOR CONSTRUCTION

WASHETERIA AND WATER TANK

ELECTRICAL CONTROL DIAGRAMS & DETAILS

CHEFORNAK, ALASKA

CE2 ENGINEERS, INC.
PO BOX 223246 ANCHORAGE, AK 99523 PH: 907-349-1018 FAX: 907-349-1015

REVISION	
NUM	DESCRIPTION

Project No. E13-1941
Date AUGUST 2016
Designed BLS
Drawn BLS
Approved EDC

Sheet No.
E6.1

8/29/2016 5:16:59 P:\E13\E13-1941 Chefornak Washeteria\050 DWG\E13-1941_Chefornak_Washeteria.rvt
8/29/2016 16:24:39 ; fc-1 : psbhd : >20lcfhd : IvisOnSht : 0.8;34.7;35.5/1378