City of Atka
Incorporated
September 1, 1988
State of Alaska

# City of Atka Water And Sewer Improvements

## PHASE 1
## MAY 2007

**In Cooperation with the State of Alaska**
**Department of Environmental Conservation**
**Village Safe Water Program**

## SHEET INDEX


| | Title | No. |
|---|---|---|
| **GENERAL** | COVER SHEET/INDEX | G1.1 |
| | VICINITY MAP AND PROJECT LOCATIONS | G1.2 |
| | GENERAL NOTES, ABBREVIATIONS, AND CALLOUTS | G1.3 |
| | SURVEY CONTROL | G1.4 |
| | DESIGN CRITERIA | G1.5 |
| | NOT USED | G1.6 |
| | NOT USED | G1.7 |
| | GEOTECHNICAL INFORMATION | G1.8 |
| | GEOTECHNICAL INFORMATION | G1.9 |
| **CIVIL** | CIVIL LEGEND | C1.1 |
| | PLAN AND PROFILE KEY MAP | C1.2 |
| OLD ATKA VILLAGE WATER LINE REPLACEMENT | SITE PLAN | C2.1 |
| | PLAN AND PROFILE | C2.2 |
| | PLAN AND PROFILE | C2.3 |
| | PLAN AND PROFILE | C2.4 |
| | NOT USED | C2.5 |
| | NOT USED | C2.6 |
| | DETAILS | C2.7 |
| | DETAILS | C2.8 |
| | DETAILS | C2.9 |
| OLD ATKA VILLAGE OUTFALLS | NORTH AND SOUTH OUTFALLS SITE PLAN | C6.0 |
| | NORTH OUTFALL PLAN AND PROFILE | C6.1 |
| | SOUTH OUTFALL PLAN AND PROFILE | C6.2 |
| | DETAILS | C6.3 |
| | DETAILS | C6.4 |
| | DETAILS | C6.5 |
| | DETAILS | C6.6 |


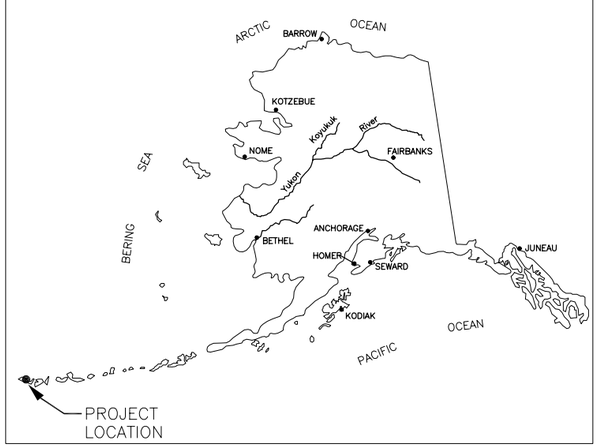


**Location Map**

**VILLAGE SAFE WATER**

HDR Alaska, Inc.

**Consultant**

RECORD DRAWING CERTIFICATE

STATE OF ALASKA 49TH TODD B. BETHARD No. CE-10463 REGISTERED PROFESSIONAL ENGINEER

THESE DRAWINGS REFLECT RECORDED INFORMATION OBTAINED DURING CONSTRUCTION.
INFORMATION PROVIDED HEREIN IS ACCURATE TO THE BEST OF MY KNOWLEDGE.

NAME DATE

Project Number (Consultant) _____ (VSW) _____
VSW Project Engineer _____
Construction Foreman _____
Final Design (Date) _____
ADEC Approval (Date) _____
Construction Period (From) _____ (To) _____
As-Builts (Date) _____

C:\PWworking\SEA\jumarcum\d0116251\ATKA-G1.1.dwg, Layout1, 5/24/2007 7:59:38 AM, jumarcum

## KEY

1 —— OLD ATKA VILLAGE WATER LINE REPLACEMENT

2 —— OLD ATKA VILLAGE OUTFALLS

## VICINITY MAP

Scale: 1" = 1 Mile

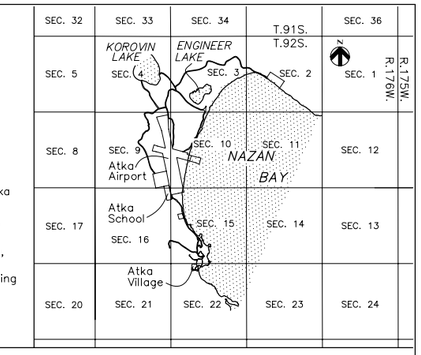


Source:

U.S.G.S. Quadrangle Atka 1:250,000

Located within partially surveyed T92S, R176W Seward Meridian Alaska,

Aleutian Islands Recording District

RECORD DRAWING CERTIFICATE

THESE DRAWINGS REFLECT RECORDED INFORMATION OBTAINED DURING CONSTRUCTION. INFORMATION PROVIDED HEREIN IS ACCURATE TO THE BEST OF MY KNOWLEDGE.

NAME DATE

VILLAGE SAFE WATER

STATE OF ALASKA 49TH TODD B. BETHARD No. CE-10463 REGISTERED PROFESSIONAL ENGINEER

HDR Alaska, Inc.

**City of Atka**
**Water and Sewer Improvements**

**VICINITY MAP AND PROJECT LOCATIONS**

| REVISION | BY | DATE |
|---|---|---|
| ADEC PLAN REVIEW | SJM | 05/07 |

Project No. 28445
Date MAY 2007
Designed SJM
Drawn SJM
Approved TBB

Sheet No. **G1.2**

SHEET 2 OF 23

C:\PWworking\SEA\jumarcum\d0116251\ATKA-G1.2.dwg, Layout1, 5/24/2007 8:01:30 AM, jumarcum

User: JUMARCUM
Drawing: C:\PWWORKING\SEA\JUMARCUM\D0116251\ATKA-G1.2.DWG - Layout: LAYOUT1
Xrefs: 22X34-V.DWG 05-18759-HDR.DWG - Images: 16490-4-1978.SID ATKA_1FT.TIF ATKA_2FT.TIF ATKA 750-3.TIF ATKA 9-27-96.TIF

# GENERAL NOTES

INFORMATION PRESENTED ON THIS DRAWING SHALL APPLY TO THE ENTIRE PROJECT EXCEPT WHERE STATED OTHERWISE ON SPECIFIC DRAWINGS OR IN THE SPECIFICATIONS.

1. ALL WORK SHOWN IN THESE DRAWINGS IS INCLUDED IN THE CONSTRUCTION CONTRACT, EXCEPT ITEMS SPECIFICALLY LABELED AS "NOT IN CONTRACT" OR "N.I.C."

2. THE SUPERINTENDENT SHALL EXAMINE THE DRAWINGS AND SHALL NOTIFY THE ENGINEER OF ANY DISCREPANCIES OR CONFLICTS THE CONTRACTOR MAY FIND BEFORE PROCEEDING WITH THE WORK.

3. THE SUPERINTENDENT SHALL VERIFY AND BE RESPONSIBLE FOR ALL DIMENSIONS AND CONDITIONS AT THE SITE AND SHALL NOTIFY THE ENGINEER OF DISCREPANCIES BETWEEN THE ACTUAL CONDITIONS AND INFORMATION SHOWN ON THE DRAWINGS BEFORE PROCEEDING WITH THE WORK.

4. THE SUPERINTENDENT SHALL REFER TO THE SPECIFICATIONS FOR ANY INFORMATION NOT COVERED BY THESE GENERAL NOTES OR THE DRAWINGS.

5. THE SUPERINTENDENT SHALL PROVIDE AND BE RESPONSIBLE FOR TEMPORARY ERECTION BRACING AND SHORING FOR ALL STRUCTURAL MEMBERS AS REQUIRED FOR STRUCTURAL STABILITY OF THE STRUCTURES DURING CONSTRUCTION.

6. THE CONTRACT DRAWINGS AND SPECIFICATIONS REPRESENT THE FINISHED STRUCTURE. THEY DO NOT INDICATE THE METHOD OF CONSTRUCTION. SUPERINTENDENT SHALL ENGAGE QUALIFIED PERSONS TO DETERMINE THAT ALL COMPLETED WORK IS IN ACCORDANCE WITH THE CONTRACT DOCUMENTS.

7. THE SUPERINTENDENT SHALL COMPLY WITH THE EROSION AND SEDIMENT CONTROL REQUIREMENTS FOR THIS PROJECT DURING ALL PHASES OF CONSTRUCTION.

8. ALL METHODS, MATERIALS, DESIGN AND WORKMANSHIP SHALL CONFORM TO THE INTERNATIONAL BUILDING CODE (LATEST EDITION), PROJECT SPECIFICATIONS, AND APPLICABLE CODES AS REFERENCED IN THE SPECIFICATIONS.

9. THE SUPERINTENDENT SHALL STORE ALL FUELS, OILS, SOLVENTS AND HAZARDOUS MATERIALS (OHM) IN ENGINEER–APPROVED STORAGE LOCATIONS AT STAGING AREAS. APPROVED AREAS SHALL BE EXCAVATED AND LINED WITH AN IMPERMEABLE LINER TO CREATE A DEPRESSION HAVING A VOLUME LARGE ENOUGH TO CONTAIN THE TOTAL VOLUME OF OHM BEING STORED. THE SUPERINTENDENT SHALL KEEP CLEAN–UP CONTAINMENT KITS AT EACH STORAGE SITE.

10. SITE SOILS INVESTIGATION DATA IS PROVIDED IN THE FINAL GEOTECHNICAL REPORT TITLED "GEOTECHNICAL EXPLORATION, ATKA WATER PROJECT, ATKA, AK." DATED MARCH 24, 2006, BY DUANE L. MILLER, P.E.

11. ALL CONSTRUCTION SHALL BE DONE IN A WORKMANLIKE MANNER AND IN CONFORMANCE WITH APPLICABLE CODES, ADEC REGULATIONS, AND PERMIT CONDITIONS.

12. RECORD DRAWINGS – THE PROJECT FOREMAN SHALL BE RESPONSIBLE FOR MAINTAINING A CLEAN SET OF DRAWINGS AT THE PROJECT OFFICE FOR RECORD INFORMATION. ALL REQUIRED INFORMATION SHALL BE RECORDED NEATLY AND LEGIBLY IN RED PENCIL DAILY. ALL ELEVATIONS AND PLANS SHALL BE MARKED R (RECORD) OR F.C. (FIELD CHANGE) WITH THE CORRECT VALUE INSERTED. ALL SURVEY NOTES SHALL BE KEPT IN GOOD QUALITY FIELD BOOKS SUBMITTED TO THE OWNER WITH THE RECORD DRAWINGS AT THE END OF THE PROJECT.

13. UTILITY EASEMENTS – ALL WATER AND SEWER MAIN LINES SHALL BE INSTALLED WITHIN PUBLIC RIGHT–OF–WAY OR DEDICATED UTILITY EASEMENTS.

14. HISTORICAL PRESERVATION – SHOULD ANY ARCHAEOLOGICAL, CULTURAL OR PALEONTOLOGICAL RESOURCES BE DISCOVERED AS A RESULT OF CONSTRUCTION ACTIVITY, WORK THAT WOULD DISTURB SUCH RESOURCES WILL BE STOPPED AND THE STATE HISTORIC PRESERVATION OFFICE SHALL BE CONTACTED IMMEDIATELY.

15. GENERAL RESTORATION – THE AREAS IMPACTED BY CONSTRUCTION SHALL BE RETURNED TO PRE–CONSTRUCTION CONDITION OR BETTER. DISTURBED AREAS OUTSIDE THE TRAVELED WAY SHALL BE GROOMED AND SEEDED TO MATCH SURROUNDING TERRAIN. DISTURBED AREAS WITHIN THE TRAVELED WAY SHALL BE RESURFACED PER THE DRAWINGS. CONSTRUCTION DEBRIS SHALL BE REMOVED FROM THE AREA AND DISPOSED AS DIRECTED BY THE OWNER. DUE CARE AND CAUTION SHALL BE TAKEN TO AVOID DISTURBING PERSONAL PROPERTY.

16. BARRICADES AND WARNING SIGNS SHALL BE PROVIDED TO ADVISE RESIDENTS OF ROAD CLOSURES, DETOURS, AND HAZARDOUS OPEN TRENCH CONDITIONS.

17. SEPARATION DISTANCE – THE WATER MAIN SHALL NOT BE CLOSER HORIZONTALLY THAN 10 FEET TO A SANITARY SEWER MAIN. THE DISTANCE SHALL BE MEASURED EDGE TO EDGE. WATER MAINS CROSSING SEWER MAINS SHALL BE LAID TO PROVIDE A MINIMUM VERTICAL DISTANCE OF EIGHTEEN (18) INCHES BETWEEN THE OUTSIDE OF THE SEWER AND THE OUTSIDE OF THE WATER MAIN. IT IS PREFERABLE TO LOCATE THE SEWER MAIN BELOW THE WATER MAIN. AT CROSSINGS, ONE FULL LENGTH OF WATER PIPE SHALL BE LOCATED SO BOTH JOINTS WILL BE AS FAR FROM THE SEWER MAIN AS POSSIBLE. THE 18 INCH VERTICAL SEPARATION OR 10 FOOT HORIZONTAL SEPARATION DISTANCE DOES NOT APPLY TO WATER AND SEWER SERVICES CROSSING MAIN LINES. HOWEVER, THE PROJECT SUPERINTENDENT SHALL ATTEMPT TO PROVIDE THESE VERTICAL AND HORIZONTAL SEPARATION DISTANCES OF SERVICES FROM WATER AND SEWER MAINS WHENEVER POSSIBLE. WATER AND SEWER SERVICE LINES SHALL BE SEPARATED BY A DISTANCE OF 5 FEET HORIZONTALLY.

# DETAIL AND SECTION CALLOUTS

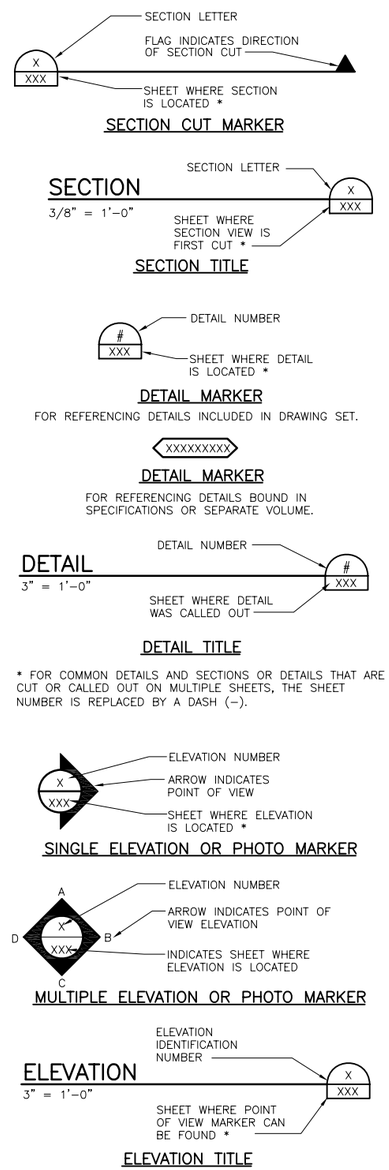


* FOR COMMON DETAILS AND SECTIONS OR DETAILS THAT ARE CUT OR CALLED OUT ON MULTIPLE SHEETS, THE SHEET NUMBER IS REPLACED BY A DASH (–).

# ABBREVIATIONS

| | |
|---|---|
| AASHTO | AMERICAN ASSOCIATION OF STATE HIGHWAY AND TRANSPORTATION OFFICIALS |
| APPROX | APPROXIMATE |
| ASTM | AMERICAN SOCIETY FOR TESTING AND MATERIALS |
| BH | BORE HOLE |
| BLDG | BUILDING |
| BM | BENCH MARK |
| BVC | BEGIN VERTICAL CURVE |
| CAV | COMBINATION AIR RELEASE/ VACUUM RELIEF |
| ℄ | CENTERLINE |
| C/L | CLEARING LIMIT |
| CC | CENTER TO CENTER |
| CFS | CUBIC FEET PER SECOND |
| CMP | CORRUGATED METAL PIPE |
| CTRS | CENTERS |
| CU | COPPER |
| CY | CUBIC YARD |
| DET | DETAIL |
| DI | DUCTILE IRON |
| DIA | DIAMETER |
| DL | DEADLOAD |
| DWG | DRAWING |
| EA | EACH |
| EVC | END VERTICAL CURVE |
| EL | ELEVATION |
| EXIST | EXISTING |
| FDN | FOUNDATION |
| FF | FINISH FLOOR |
| FG | FINISH GRADE |
| FPS | FEET PER SECOND |
| FT | FOOT OR FEET |
| FTG | FOOTING |
| GA | GAGE |
| GALV | GALVANIZED |
| GS | GROUND |
| GND | GROUND |
| GPD | GALLONS PER DAY |
| GPM | GALLONS PER MINUTE |
| HDPE | HIGH DENSITY POLYETHYLENE |
| HOR | HORIZONTAL |
| HPM | HIGHWAY PRECONSTRUCTION MANUAL |
| IE | INVERT ELEVATION |
| ID | INSIDE DIAMETER |
| IN | INCH OR INCHES |
| IP | IRON PIPE |
| LB | POUND |
| LBS | POUNDS |
| LF | LINEAR FEET |
| LL | LIVE LOAD |
| MAX | MAXIMUM |
| MGAL | MILLION GALLONS |
| MG/L | MILLIGRAMS PER LITER |
| MIN | MINIMUM OR MINUTE |
| MISC | MISCELLANEOUS |
| MPH | MILES PER HOUR |
| N | NORTH |
| NA | NOT APPLICABLE |
| NOM | NOMINAL |
| NTS | NOT TO SCALE |
| OC | ON CENTER |
| OD | OUTSIDE DIAMETER |
| PC | POINT OF CURVE |
| PERF | PERFORATED |
| PI | POINT OF INTERSECTION |
| ? | PLATE OR PROPERTY LINE |
| PPCD | POUNDS PER CAPITA PER DAY |
| PPCD | PARTS PER MILLION |
| PRV | PRESSURE REDUCING VAULT |
| PSF | POUND PER SQUARE FOOT |
| PSI | POUND PER SQUARE INCH |
| PT | POINT OF TANGENT |
| PVC | POINT OF VERTICAL CURVE OR POLYVINYL CHLORIDE |
| PVI | POINT OF VERTICAL INTERSECTION |
| PVT | POINT OF VERTICAL TANGENT |
| QTY | QUANTITY |
| R | RADIUS |
| REF | REFERENCE |
| REINF | REINFORCEMENT |
| REQD | REQUIRED |
| RW | RAW WATER |
| R/W | RIGHT–OF–WAY |
| S | SOUTH, SLOPE |
| SCH | SCHEDULE |
| SECT | SECTION |
| SHT | SHEET |
| SIM | SIMILAR |
| SS | STAINLESS STEEL OR SANITARY SEWER |
| STA | STATION |
| STD | STANDARD |
| STL | STEEL |
| TW | TREATED WATER |
| TYP | TYPICAL |
| TP | TEST PIT |
| UG | UNDERGROUND |
| USGS | UNITED STATES GEOLOGICAL SURVEY |
| VC | VERTICAL CURVE |
| VER | VERTICAL |
| VPI | VERTICAL POINT OF INTERSECTION |
| W/ | WITH |
| W/O | WITHOUT |
| WS | WATER SURFACE |
| WT | WEIGHT |
| WWF | WELDED WIRE FABRIC |
| XS | EXTRA STRONG |
| YD | YARD |

* FOR ADDITIONAL DISCIPLINE–SPECIFIC ABBREVIATIONS SEE SHEETS C1.1, M1.1, S1.1 AND E1.1

# LOCAL UTILITIES

| | | | |
|---|---|---|---|
| ELECTRICAL | ANDREANOF ELECTRIC CORPORATION | 907–581–6226 | JULIE DIRKS |
| FUEL | CITY OF ATKA | 839–2233 | LEONTY LOKANIN |
| GAS | N/A | N/A | N/A |
| SEWER | CITY OF ATKA | 839–2233 | LEONTY LOKANIN |
| STORM DRAIN | N/A | N/A | N/A |
| TRAFFIC/ROADS | CITY OF ATKA | 839–2233 | RON SNIGAROFF |
| TELEPHONE | ACS OF NORTHLAND<br>GCI<br>AT&T ALASCOM | 800–808–8083<br>800–800–4800<br>800–252–7266 | N/A<br>N/A<br>N/A |
| TELEVISION | ATXAM VILLAGE CORPORATION | 839–2237 | MARK SNIGAROFF |
| WATER | CITY OF ATKA | 839–2233 | ARNOLD GOLODOF |

RECORD DRAWING CERTIFICATE

THESE DRAWINGS REFLECT RECORDED INFORMATION OBTAINED DURING CONSTRUCTION. INFORMATION PROVIDED HEREIN IS ACCURATE TO THE BEST OF MY KNOWLEDGE.

NAME DATE

VILLAGE SAFE WATER

STATE OF ALASKA 49TH TODD B. BETHARD No. CE-10463 REGISTERED PROFESSIONAL ENGINEER

HDR Alaska, Inc.

**City of Atka**
**Water and Sewer Improvements**

**GENERAL NOTES, ABBREVIATIONS, AND CALLOUTS**

| REVISION | BY | DATE |
|---|---|---|
| ADEC PLAN REVIEW | SJM | 05/07 |

Project No. 28445
Date MAY 2007
Designed SJM
Drawn SJM
Approved TBB

Sheet No. **G1.3**
SHEET 3 OF 23

User: JUMARCUM
Drawing: C:\P*W*WORKING\SEA\jumarcum\d0116251\ATKA-G1.3.DWG - Layout: LAYOUT1
Xrefs: 22X34-V.DWG - Images:
G:\P*W*WORKING\SEA\jumarcum\d0116251\ATKA-G1.3.dwg, Layout1, 5/24/2007 8:03:01 AM, jumarcum

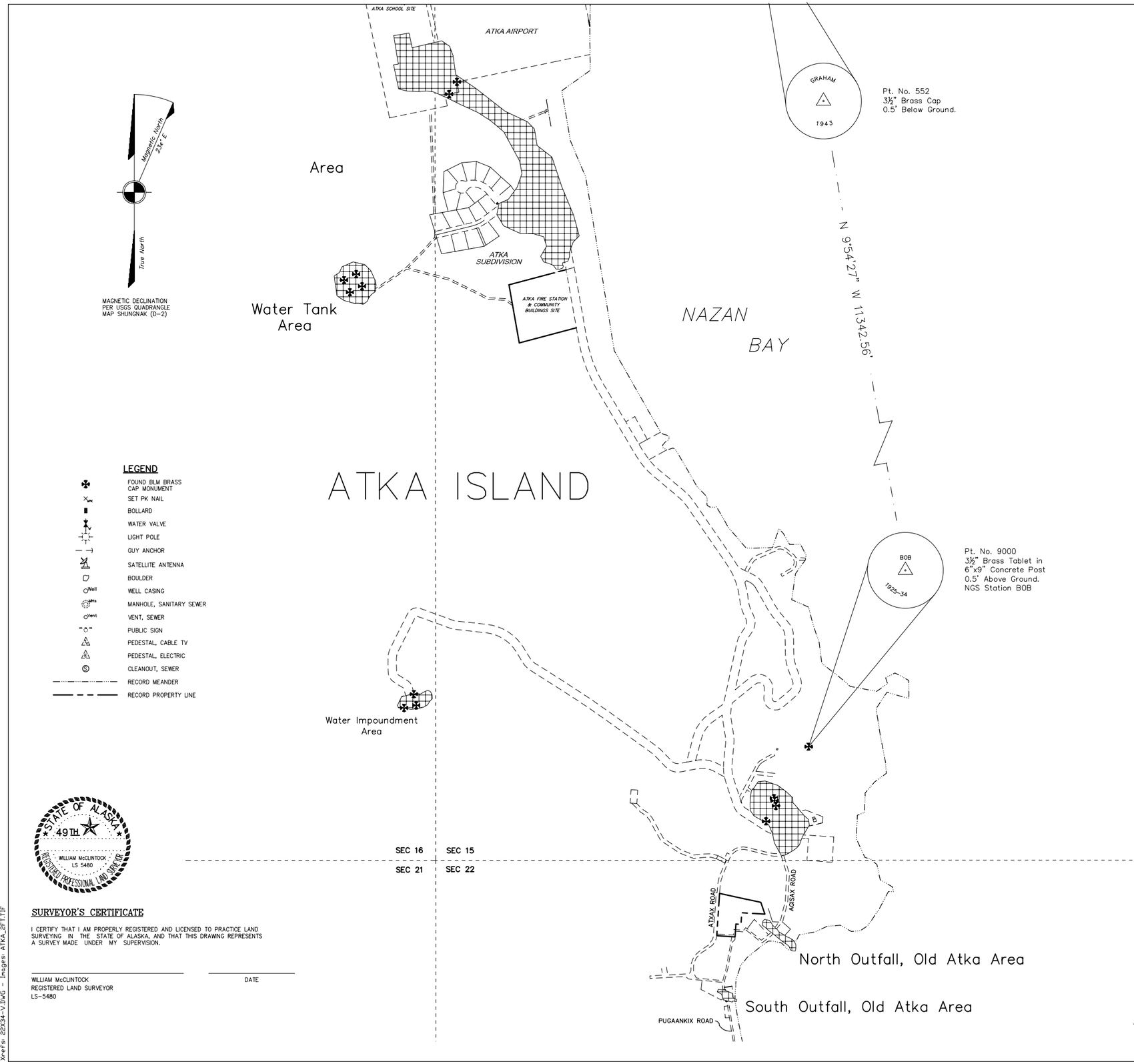


## LEGEND

- FOUND BLM BRASS CAP MONUMENT
- SET PK NAIL
- BOLLARD
- WATER VALVE
- LIGHT POLE
- GUY ANCHOR
- SATELLITE ANTENNA
- BOULDER
- WELL CASING
- MANHOLE, SANITARY SEWER
- VENT, SEWER
- PUBLIC SIGN
- PEDESTAL, CABLE TV
- PEDESTAL, ELECTRIC
- CLEANOUT, SEWER
- RECORD MEANDER
- RECORD PROPERTY LINE

STATE OF ALASKA 49TH WILLIAM McCLINTOCK LS 5480 REGISTERED PROFESSIONAL LAND SURVEYOR

## SURVEYOR'S CERTIFICATE

I CERTIFY THAT I AM PROPERLY REGISTERED AND LICENSED TO PRACTICE LAND SURVEYING IN THE STATE OF ALASKA, AND THAT THIS DRAWING REPRESENTS A SURVEY MADE UNDER MY SUPERVISION.

WILLIAM McCLINTOCK
REGISTERED LAND SURVEYOR
LS-5480

DATE

## VICINITY MAP

Scale: 1" = 1 Mile

Source:

U.S.G.S. Quadrangle Atka 1:250,000

Located within partially surveyed T92S, R176W Seward Meridian Alaska,

Aleutian Islands Recording District

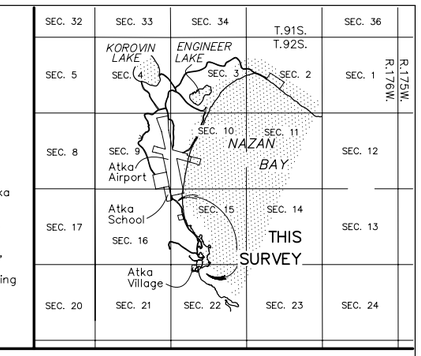


## Horizontal Control

A local surface plane coordinate system based on a series of least square adjusted static GPS observations performed by McClintock Land Associates in 2001.

NGS Station "BOB", a 3 ½" Brass Tablet in a 6" x 9" concrete post has a NAD83(CORS96) geodetic position of Latitude 52°12'5.8182" North, Longitude 174°11'46.9733" West, determined using multiple static GPS observations and an averaged NGS OPUS solution. Local coordinates for station "Bob" (pt 9000), are: N. 41340.44'; E. 152612.54'.
NGS Station "Graham", a 3 ½" Brass Cap bears North 09°54'27" West, 11342.56' and has local coordinates of N. 52513.85; E. 150660.94'.

These points establish the Basis of Bearings. All bearings shown are local bearings as oriented to this Basis of Bearings and the distances shown are local horizontal ground distances.

## Vertical Control

The vertical datum is NAVD88, expressed in feet, as established by the post processed GPS position of station "Bob" as described in the Horizontal Control Statement (NAVD88 elevation of 193.81'); the RTK GPS survey data shown hereon contains orthometric heights determined with a geoid model ("GEOID99").

To convert from this datum to the Mean Lower Low Water (MLLW) datum, add 3.0 feet to the surveyed elevations. Mean High Water (MHW) is approximately 3.3 feet above MLLW.
Conversion from the NAVD88 datum to MLLW was determined with a series of GPS tida

RECORD DRAWING CERTIFICATE

THESE DRAWINGS REFLECT RECORDED INFORMATION OBTAINED DURING CONSTRUCTION. INFORMATION PROVIDED HEREIN IS ACCURATE TO THE BEST OF MY KNOWLEDGE.

NAME DATE

VILLAGE SAFE WATER


McCLINTOCK LAND ASSOCIATES, INC
11940 BUSINESS BOULEVARD, SUITE 205
EAGLE RIVER, ALASKA 99577
(907) 694-4499


City of Atka
Water and Sewer Improvements

SURVEY CONTROL

| REVISION | BY | DATE |
|---|---|---|
| ADEC PLAN REVIEW | SJM | 05/07 |

Project No. 28445
Date 8-09-05
Designed
Drawn CH
Approved BM

Sheet No. G1.4
SHEET 4 OF 23


User: JUMARCUM\DWG\Working\SEA\jumarcum\d0116251\ATKA-G1.4.dwg, Index Sheet, 5/24/2007 8:06:37 AM, jumarcum
Drawing: C:\PW\WORKING\SEA\JUMARCUM\D0116251\ATKA-G1.4.DWG - Layout: INDEX SHEET
Xrefs: 22X34-V.DWG - Images: ATKA_2FT.TIF

## SUMMARY OF WORK

THIS PHASE OF WORK INCLUDES THE REPLACEMENT OF THE PIPED WATER DISTRIBUTION SYSTEM IN OLD ATKA VILLAGE, REPLACEMENT OF THE TWO WASTEWATER OCEAN OUTFALLS IN OLD ATKA VILLAGE INCLUDING INSTALLATION OF TWO 10,000-GALLON COMMUNITY SEPTIC TANKS.

### CITY POPULATION

| | |
|---|---|
| CURRENT | 92 |
| 20-YEAR DESIGN | 139 |

### CURRENT DESIGN FLOW

OLD ATKA VILLAGE (POPULATION – 52)

| | |
|---|---|
| AVG DAILY FLOW | |
| RESIDENTIAL (145 GPCD) | 7,540 GPD |
| HEALTH CLINIC | 150 GPD |
| COMMERCIAL | 300 GPD |
| UNACCOUNTED LEAKS/LOSSES (15%) | 1,200 GPD |
| TOTAL | 9,190 GPD (6.4 GPM) |

NEW ATKA SUBDIVISION (POPULATION – 40)

| | |
|---|---|
| AVG DAILY FLOW | |
| RESIDENTIAL (145 GPCD) | 5,800 GPD |
| SCHOOL | 630 GPD |
| UNACCOUNTED LEAKS/LOSSES (15%) | 965 GPD |
| TOTAL | 7,395 GPD (5.1 GPM) |
| MAX DAILY FLOW (2X AVG DAILY)[1] | |
| OLD ATKA VILLAGE | 17,180 GPD (11.9 GPM) |
| NEW ATKA SUBDIVISION | 13,825 GPD (9.6 GPM) |
| PEAK HOURLY FLOW (4.5X AVG DAILY)[1] | |
| OLD ATKA VILLAGE | 25.8 GPM |
| NEW ATKA SUBDIVISION | 20.8 GPM |
| ATKA PRIDE SEAFOODS | |
| SEAFOOD PROCESSING (MAY-OCT) | 13,110 GPD |

### 20-YEAR DESIGN FLOW

OLD ATKA VILLAGE (POPULATION – 79)

| | |
|---|---|
| AVG DAILY FLOW | |
| RESIDENTIAL (145 GPCD) | 11,455 GPD |
| HEALTH CLINIC | 200 GPD |
| COMMERCIAL | 350 GPD |
| UNACCOUNTED LEAKS/LOSSES (15%) | 1,800 GPD |
| TOTAL | 13,805 GPD |

NEW ATKA SUBDIVISION (POPULATION – 60)

| | |
|---|---|
| AVG DAILY FLOW | |
| RESIDENTIAL (145 GPCD) | 8,700 GPD |
| SCHOOL | 955 GPD |
| UNACCOUNTED LEAKS/LOSSES (15%) | 1,448 GPD |
| TOTAL | 11,103 GPD |
| MAX DAILY FLOW (2X AVG DAILY)[1] | |
| OLD ATKA VILLAGE | 25,810 GPD (17.9 GPM) |
| NEW ATKA SUBDIVISION | 20,758 GPD (14.4 GPM) |
| PEAK HOURLY FLOW (4.5X AVG DAILY)[1] | |
| OLD ATKA VILLAGE | 38.8 GPM |
| NEW ATKA SUBDIVISION | 31.2 GPM |
| ATKA PRIDE SEAFOODS | |
| SEAFOOD PROCESSING (MAY-OCT) | 19,700 GPD |

### EXISTING STORAGE CAPACITY

OLD ATKA VILLAGE
30,000 GALLONS (NOMINAL)
2.2 DAYS @ AVG DAILY FLOW
1.2 DAYS @ MAX DAILY FLOW

NEW ATKA SUBDIVISION
30,000 GAL (NOMINAL)
2.7 DAYS @ AVG DAILY FLOW
1.4 DAYS @ MAX DAILY FLOW

### SYSTEM PRESSURES

| | |
|---|---|
| MINIMUM DISTRIBUTION SYSTEM PRESSURE | 20 PSI |
| MAXIMUM DISTRIBUTION SYSTEM PRESSURE | 70 PSI |

NOTES
1 A MULTIPLIER IS NOT USED FOR SEAFOOD PROCESSING FLOW OR UNACCOUNTED LEAKS/LOSSES IN CALCULATION OF MAX DAILY FLOW AND PEAK HOUR FLOW.

**DESIGN CRITERIA**

RECORD DRAWING CERTIFICATE
THESE DRAWINGS REFLECT RECORDED INFORMATION OBTAINED DURING CONSTRUCTION. INFORMATION PROVIDED HEREIN IS ACCURATE TO THE BEST OF MY KNOWLEDGE.
NAME DATE

VILLAGE SAFE WATER

STATE OF ALASKA 49TH TODD B. BETHARD No. CE-10463 REGISTERED PROFESSIONAL ENGINEER

HDR Alaska, Inc.

City of Atka
Water and Sewer Improvements

PROJECT SCHEMATIC AND DESIGN CRITERIA

| REVISION | BY | DATE |
|---|---|---|
| ADEC PLAN REVIEW | SJM | 05/07 |

Project No. 28445
Date MAY 2007
Designed SJM
Drawn SJM
Approved TBB

Sheet No. G1.5
SHEET 5 OF 23

C:\PWworking\SEA\jumarcum\d0116251\ATKA-G1.5.dwg, Layout1, 5/24/2007 8:07:53 AM, jumarcum
User: JUMARCUM
Drawing: C:\PWWORKING\SEA\JUMARCUM\D0116251\ATKA-G1.5.DWG - Layout: LAYOUT1
Xrefs: 22X34-V.DWG - Images:

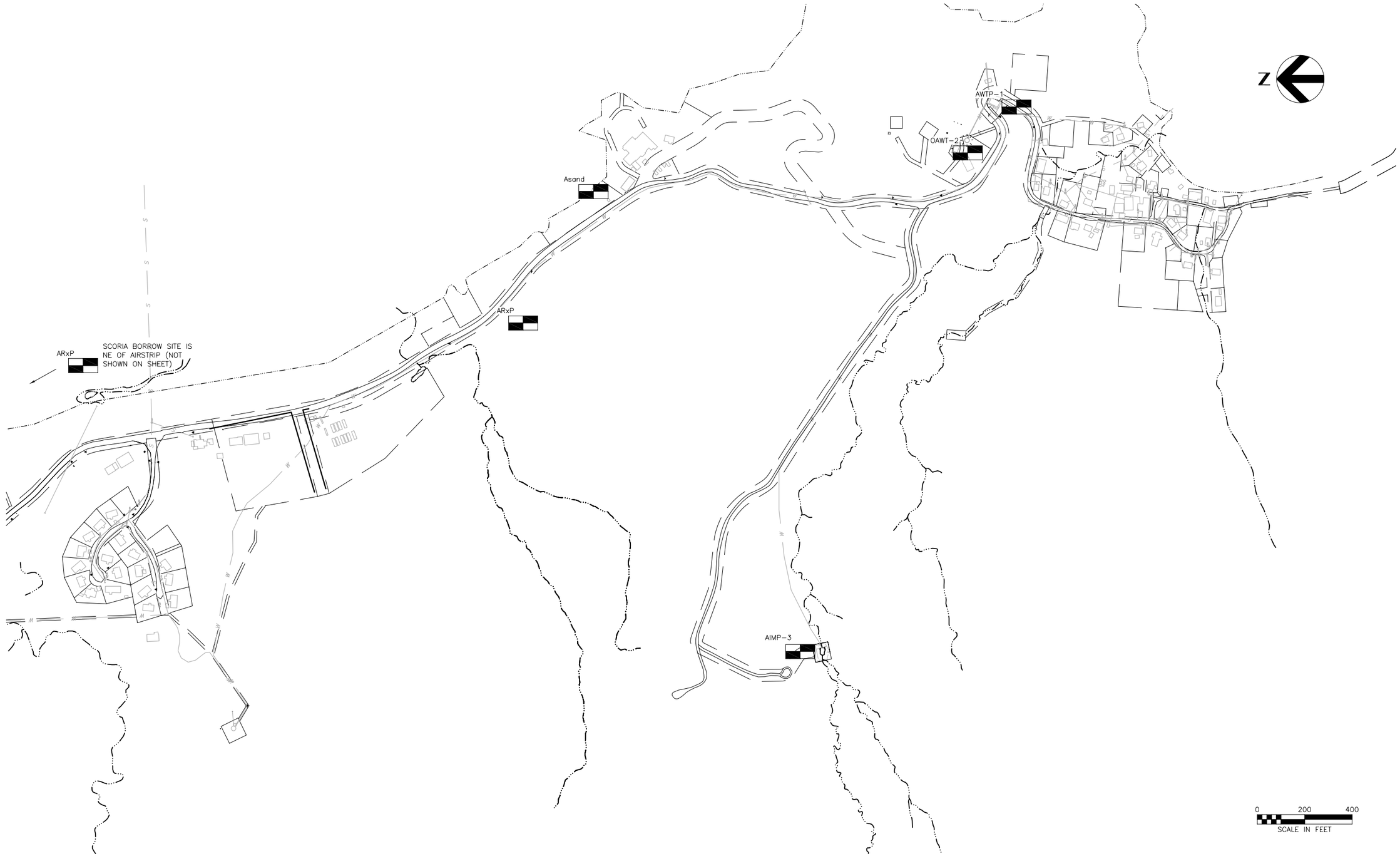


SOURCE:

TESTHOLE LOCATION AND CLASSIFICATION INFORMATION TAKEN FROM DUANE MILLER & ASSOCIATES GEOTECHNICAL INVESTIGATION FOR THE ATKA WATER PROJECT – MARCH 2006. TYPICAL FOR G1.8 & G1.9.

RECORD DRAWING CERTIFICATE

THESE DRAWINGS REFLECT RECORDED INFORMATION OBTAINED DURING CONSTRUCTION. INFORMATION PROVIDED HEREIN IS ACCURATE TO THE BEST OF MY KNOWLEDGE.

NAME DATE

VILLAGE SAFE WATER

STATE OF ALASKA 49TH TODD B. BETHARD No. CE-10463 REGISTERED PROFESSIONAL ENGINEER

HDR Alaska, Inc.

**City of Atka**
**Water and Sewer Improvements**

**GEOTECHNICAL INFORMATION**

| REVISION | BY | DATE |
|---|---|---|
| ADEC PLAN REVIEW | SJM | 05/07 |

Project No. 28445
Date MAY 2007
Designed SJM
Drawn SJM
Approved TBB

Sheet No. **G1.8**
SHEET 6 OF 23

User: JUMARCUM
Drawing: C:\PWWORKING\SEA\jumarcum\d0116251\ATKA-G1.8-9.dwg, G1.8, 5/24/2007 8:09:42 AM, jumarcum
Xrefs: 22X34-Y.DWG 05-1875P-HDR.DWG – Images: PLATE2.JPG PLATE3.JPG PLATE4.JPG PLATE5.JPG PLATE6.JPG PLATE7.JPG PLATE8.JPG 16490-4-1978.SID ATKA_1FT.TIF ATKA_2FT.TIF ATKA 750-3.

**DUANE MILLER & ASSOCIATES**

Project: Atka Water Project
DM&A Job No.: 4086.055
Logged By: L. Silliphant

Moisture Content % (●), PL & LL (–),Salinity (△) and Sampling Blows/ft (□)

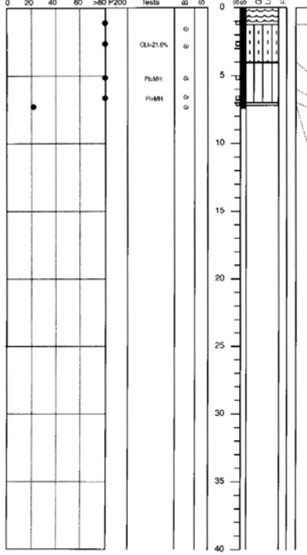


**Log of HOLE: AWTP-1**

Date Drilled: 9/1/05
Contractor: City of Atka
Equipment: Catepillar 420D
GPS Coord.: N 52°12'00.7", W 174°11'48.2" NAD 83
Elevation: 67'

Description

**Peat (Pt)** Brown, fibrous, soft, wet.

**Organic Silt (OL)** Brown to red-brown, fibrous, w/ trace fine sand, soft, wet, (ash), water slowly dripping into test pit. 2.5" tan silty ash layer at 2.8'

**Sandy Silt (MH)** Light brown, w/ some fibrous organics (roots), wet, plastic (ash)

Red, medium stiff, moist, plastic below 6'

**Bedrock (Rock)** Green, cobble size pieces of volcanic rock to 6". w/ brown and gray clay interspersed between pieces of bedrock, moist

Bottom of test pit at 7.2'. Note: sides of test pit slumping into hole due to high moisture content in the soil.

Duane Miller & Associates
Job No.: 4086.055
Date: March 2006

**LOG of TEST Test Hole AWTP-1**
Atka Water Project
Atka, Alaska

Plate 2

**DUANE MILLER & ASSOCIATES**

Project: Atka Water Project
DM&A Job No.: 4086.055
Logged By: L. Silliphant

Moisture Content % (●), PL & LL (–),Salinity (△) and Sampling Blows/ft (□)

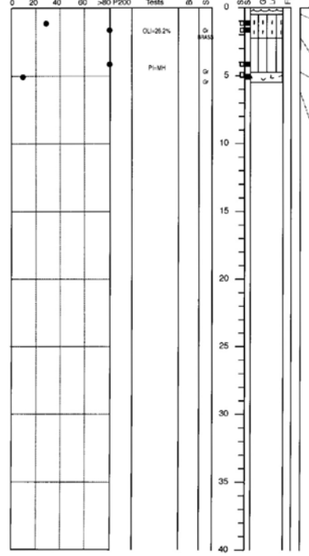


**Log of HOLE: OAWT-2**

Date Drilled: 9/1/05
Contractor: City of Atka
Equipment: Catepillar 420D
GPS Coord.: N 52°12'02.2", W 174°11'50.6" NAD 83
Elevation: 109'

Description

**Peat (Pt)** Red-brown, fibrous, soft

**Organic Silt (OL)** Black, w/ some fibrous organics (roots), w/ trace fine to medium sand, soft, dry (ash)

**Sandy Silt (MH)** Red, medium stiff, moist, plastic, hard to get out of bucket, (ash)

**Bedrock (Rock)** Black and green cobble size pieces of bedrock to 4" (andesite), w/ tan clay interspersed between pieces of bedrock.

Bottom of test pit at 5.5'.

Duane Miller & Associates
Job No.: 4086.055
Date: March 2006

**LOG of TEST Test Hole OAWT-2**
Atka Water Project
Atka, Alaska

Plate 3

**DUANE MILLER & ASSOCIATES**

Project: Atka Water Project
DM&A Job No.: 4086.055
Logged By: L. Silliphant

Moisture Content % (●), PL & LL (–),Salinity (△) and Sampling Blows/ft (□)

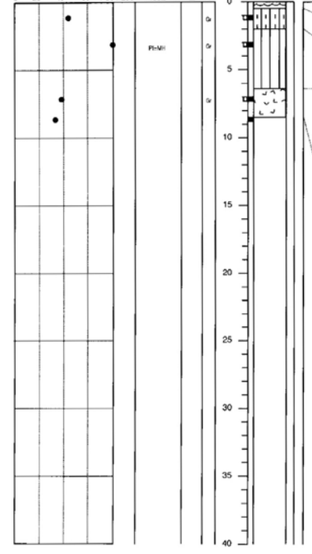


**Log of HOLE: AIMP-3**

Date Drilled: 9/1/05
Contractor: City of Atka
Equipment: Catepillar 420D
GPS Coord.: N 52°12'09.9", W 174°12'26.3" NAD 83
Elevation: 260'

Description

**Peat (Pt)** Brown, fibrous, soft

**Organic Silt (OL)** Black, soft, moist, w/ tan, silty ash layer at 1.2'

**Sandy Silt (MH)** Red, w/ trace fibrous organics, moist, plastic (ash)

**Weathered Bedrock (CL+Rock)** Brown and gray, cobble size pieces of bedrock to 6" (porphyritic basalt and andesite), brown and gray clumps of hard clay (weathered bedrock), w/ gray and brown clay interspersed between hard clay balls and pieces of bedrock, moist

Bottom of test pit at 8.5'. Note: water seeping into test pit from a small seep perched above the clay and bedrock interval.

Duane Miller & Associates
Job No.: 4086.055
Date: March 2006

**LOG of TEST Test Hole AIMP-3**
Atka Water Project
Atka, Alaska

Plate 4

| MAJOR DIVISIONS | | | SYMBOL | TYPICAL NAMES |
|---|---|---|---|---|
| COARSE GRAINED SOILS 50% or more larger than #200 sieve, 0.075 mm | GRAVELS More than half of the coarse fraction is larger than #4 sieve size, > 4.75 mm. | Clean gravels with little or no fines | GW | Well graded gravels, sandy gravel |
| | | | GP | Poorly graded gravels, sandy gravel |
| | | Gravels with more than 12% fines | GM | Silty gravels, silt sand gravel mixtures |
| | | | GC | Clayey gravels, clay sand gravel mixtures |
| | SANDS More than half of the coarse fraction is smaller than #4 sieve size, < 4.75 mm. | Clean sands with little or no fines | SW | Well graded sand, gravelly sand |
| | | | SP | Poorly graded sands, gravelly sand |
| | | Sands with more than 12% fines | SM | Silty sand, silt gravel sand mixtures |
| | | | SC | Clayey sand, clay gravel sand mixtures |
| FINE GRAINED SOILS >50% less than #200 sieve | SILTS and CLAYS | Liquid limit less than 50 | ML | Inorganic silt and very fine sand, rock flour |
| | | | CL | Inorganic clay, gravelly and sandy clay, silty clay |
| | | | OL | Organic silts and clay of low plasticity |
| | | Liquid limit greater than 50 | MH | Inorganic silt |
| | | | CH | Inorganic clay, fat clay |
| | | | OH | Organic silt and clay of high plasticity |
| HIGHLY ORGANIC SOILS | | | Pt | Peat and other highly organic soil |

Plasticity Chart: Plasticity Index (0, 20, 40) vs. Liquid Limit (0, 50); CL, CH, ML, MH

**KEY TO TEST DATA**

PP = Pocket Penetrometer
Dd = Dry Density (pcf)
LL = Liquid Limit
PL = Plastic Limit
PI = Plastic Index
NP = non Plastic
SpG = Specific Gravity
SA = Sieve Analysis
MA = Sieve and Hydrometer Analysis
OLI = Organic Loss
RD = Relative Density
D1557 = modified Proctor
TS = Thaw Consolidation
Cons = Consolidation
TXUU = Unconsolidated Undrained Triaxial
TXCU = Consolidated Undrained Triaxial
TXCD = Consolidated Drained Triaxial
Strength Data XXX(YYY), where XXX = $(\sigma_1-\sigma_3)/2$, YYY = $\sigma_3$

**KEY TO SAMPLE TYPE**

gr = Grab sample
Ag = Auger grab
Ab = Auger bulk
Sh = 2.5" ID split barrel w/ 340 lb. manual hammer
Sh* = 2.5" ID split barrel w/ 140 lb. manual hammer
Sha= 2.5" ID split barrel w/ 340 lb. automatic hammer
P = Pushed Sampler
Tw = Shelby tube
Ss = 1.4" ID split barrel w/ 140 lb. manual hammer
Cc = 3.25" continuous core barrel

**UNIFIED SOIL CLASSIFICATION SYSTEM**

| GROUP | ICE VISIBILITY | DESCRIPTION | | | SYMBOL | |
|---|---|---|---|---|---|---|
| N | Segregated ice not visible by eye | Poorly bonded or friable | | | Nf | |
| | | Well bonded | No excess ice | | Nb | Nbn |
| | | | Excess microscopic ice | | | Nbe |
| V | Segregated ice is visible by eye and is one inch or less in thickness | Individual ice crystals or inclusions | | | Vx | |
| | | Ice coatings on particles | | | Vc | |
| | | Random or irregularly oriented ice | | | Vr | |
| | | Stratified or distinctly oriented ice | | | Vs | |
| | | Uniformly distributed ice | | | Vu | |
| ICE | Ice greater than one inch in thickness | Ice with soil inclusions | | | ICE + soil type | |
| | | Ice without soil inclusions | | | ICE | |

**ICE CLASSIFICATION SYSTEM**

Duane Miller & Associates
Job No.: 4086.055
Date: March 2006

**SOIL and ICE CLASSIFICATION and KEY TO DATA**
Atka Water Project
Atka, Alaska

Plate 5

| Test Hole | Sample Depth | Soil Type (USCS) | Thermal State | Sampler Type | Moisture Content | Dry Density | Organic Loss | Salinity | Passing #200 | Other Tests |
|---|---|---|---|---|---|---|---|---|---|---|
| AWTP-1 | 1.0 ft. | Pt | Unfrozen | Gr | 164.7% | | | | | |
| AWTP-1 | 2.5 ft. | OL | Unfrozen | Gr | 208.3% | | 22% | | | |
| AWTP-1 | 5.0 ft. | MH | Unfrozen | Gr | 102.0% | | | | | PI |
| AWTP-1 | 6.5 ft. | MH | Unfrozen | Gr | 124.1% | | | | | PI |
| AWTP-1 | 7.2 ft. | ROCK | Unfrozen | Gr | 22.0% | | | | | |
| OAWT-2 | 1.0 ft. | ML | Unfrozen | Gr | 28.9% | | | | | |
| OAWT-2 | 1.5 ft. | OL | Unfrozen | Brass | 154.2% | 26 pcf | 26% | | | |
| OAWT-2 | 4.0 ft. | MH | Unfrozen | Gr | 220.5% | | | | | PI |
| OAWT-2 | 4.9 ft. | ROCK | Unfrozen | Gr | 9.8% | | | | | |
| AIMP-3 | 1.0 ft. | OL | Unfrozen | Gr | 44.1% | | | | | |
| AIMP-3 | 3.0 ft. | MH | Unfrozen | Gr | 140.4% | | | | | PI |
| AIMP-3 | 7.0 ft. | CL + Rock | Unfrozen | Gr | 38.5% | | | | | |
| AIMP-3 | 8.5 ft. | CL + Rock | Unfrozen | Gr | 33.4% | | | | | |
| AWTP-SE | 1.5 ft. | SP | Unfrozen | Gr | 69.3% | | | 0 ppt | | |
| NAWT-4 | 1.6 ft. | ML | Unfrozen | Gr | 137.9% | | | | | |
| NAWT-4 | 1.0 ft. | OL | Unfrozen | Gr | 154.2% | | | | | |
| DAM-5 | 1.5 ft. | OL | Unfrozen | Gr | 159.1% | | | | | |
| AScP-1 | 0.0 ft. | GW-GM | Unfrozen | Gr | 8.5% | | | | 6.8% | |
| AScP-2 | 0.0 ft. | GW-GM | Unfrozen | Gr | | | | | | |
| Asand-1 | 0.0 ft. | SP | Unfrozen | Gr | 6.0% | | | 0 ppt | 0.3% | |
| ARxP-1 | 0.0 ft. | Rock | Unfrozen | Gr | | | | | | |

Duane Miller & Associates
Job No. 4086.055
March 2006

**SUMMARY OF SAMPLES**
Atka Water Project
Atka, Alaska

Plate 6

| Boring => | AScP-1 | Asand-1 |
|---|---|---|
| Depth => | 0.0 ft. | 0.0 ft. |
| 3" => | 100% | 100% |
| 1.5" => | 77% | 100% |
| 3/4" => | 53% | 100% |
| 3/8" => | 41% | 100% |
| #4 => | 35% | 100% |
| #10 => | 29% | 100% |
| #20 => | 22% | 100% |
| #40 => | 17% | 93% |
| #60 => | 13% | 23% |
| #100 => | 10% | 1% |
| #200 => | 6.8% | 0.3% |
| ***Analysis of Data*** | | |
| D10 size => | 0.153 mm | 0.186 mm |
| D30 size => | 2.329 mm | 0.264 mm |
| D50 size => | 16.197 mm | 0.308 mm |
| D60 size => | 23.371 mm | 0.332 mm |
| Coeff. of Uniformity, Cu = | 152.27 | 1.79 |
| Coeff. of Curvature, Cc = | 1.51 | 1.13 |
| Gravel (+#4) percentage = | 65.3% | 0.0% |
| AASHTO Gravel (+#10) = | 71.0% | 0.0% |
| Sand percentage = | 27.9% | 99.7% |
| Fines percentage = | 6.8% | 0.3% |
| Unified Soil Class Symbol = | **GW-GM** | **SP** |

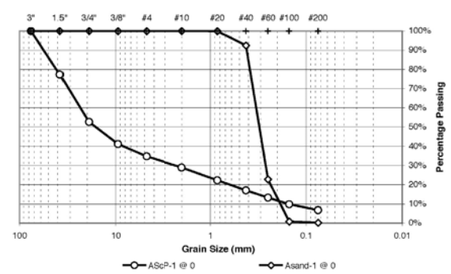


Duane Miller & Associates
Job No. 4086.055
March 2006

**PARTICLE SIZE DATA**
Atka Water Project
Atka, Alaska

Plate 7

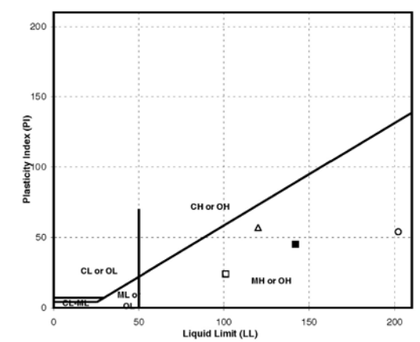


| Sample Location | Plastic Limit | Liquid Limit | Plasticity Index | Natural Moisture Content | USCS |
|---|---|---|---|---|---|
| □ AWTP @ 5.0 ft | 77 | 101 | 24 | 102.0% | MH |
| △ AWTP @ 6.5 ft | 63 | 120 | 57 | 124.1% | MH |
| ○ OAWT @ 4.0 ft | 148 | 202 | 54 | 220.5% | MH |
| ■ AIMP @ 3.5 ft | 97 | 142 | 45 | 140.0% | MH |

Duane Miller & Associates
Job No. 4086.055
March 2006

**PLASTICITY CHART**
Atka Water Project
Atka, Alaska

Plate 8

RECORD DRAWING CERTIFICATE

THESE DRAWINGS REFLECT RECORDED INFORMATION OBTAINED DURING CONSTRUCTION. INFORMATION PROVIDED HEREIN IS ACCURATE TO THE BEST OF MY KNOWLEDGE.

NAME DATE

VILLAGE SAFE WATER

STATE OF ALASKA 49TH TODD B. BETHARD No. CE-10463 REGISTERED PROFESSIONAL ENGINEER

HDR Alaska, Inc.

**City of Atka**
**Water and Sewer Improvements**

**GEOTECHNICAL INFORMATION**

| REVISION | BY | DATE |
|---|---|---|
| ADEC PLAN REVIEW | SJM | 05/07 |

Project No. 28445
Date MAY 2007
Designed SJM
Drawn SJM
Approved TBB

Sheet No. **G1.9**
SHEET 7 OF 23

User: JUMARCUM
Drawing: C:\PWWORKING\SEA\jumarcum\d0116251\ATKA-G1.8-9.dwg, G1.9, 5/24/2007 8:10:23 AM, jumarcum
Xrefs: 22X34-V.DWG 05-187SP-HDR.DWG – Images: PLATE2.JPG PLATE3.JPG PLATE4.JPG PLATE5.JPG PLATE6.JPG PLATE7.JPG PLATE8.JPG 16490-4-1978.SID ATKA_1FT.TIF ATKA_2FT.TIF ATKA_750-3.

# CIVIL LEGEND

- EMBANKMENT SLOPE
- 50.5 — CONTOUR
- VEGETATION (SIZE)
- CO — CLEANOUT
- MH — MANHOLE
- MW — MONITORING WELL
- PZ — PIEZOMETER
- CB — STORM DRAIN CATCH BASIN
- UV — UTILITY VAULT
- PP — POWER POLE
- TP — TELEPHONE POLE
- FH — FIRE HYDRANT
- LIGHT POLE
- 75.5 — EXISTING SPOT ELEVATION
- 75.8 — FINISHED SPOT ELEVATION
- BENCHMARK
- TH-"X" — IDENTIFICATION AND APPROXIMATE LOCATION OF SOIL TEST HOLE
- WATER WELL
- DOWNGUY
- PEDESTAL, ELECTRIC
- PEDESTAL, CABLE TV
- PEDESTAL, TELEPHONE
- SIGN
- CULVERT
- HORIZONTAL CONTROL
- VERTICAL CONTROL
- HORIZONTAL/VERTICAL CONTROL
- STRUCTURE
- MISC. OBJECT
- AIR RELEASE VALVE
- WATER ISOLATION VALVE
- N — NORTH ARROW

## NOTES:

1. UTILITIES THAT ARE SUSPENDED ABOVE GRADE ARE DESIGNATED BY THE PREFIX "OH" (OVERHEAD).

- T — TELEPHONE LINE
- E — ELECTRIC LINE
- W — WATER LINE
- S — SEWER LINE
- TV — CABLE TV LINE
- POL — PETROLEUM FUEL/OIL/LUBRICANT LINE
- PIPELINE
- LARGE PIPELINE
- UTILITY BENEATH STRUCTURE
- RAILROAD
- DRAINAGE FLOW
- NATURAL WATERWAY
- X — CHAIN LINK FENCE
- X — FIELD FENCE
- PROPERTY LINE
- CENTERLINE
- RB — ROCK BERM
- SF — SILT FENCE
- EASEMENT
- LIMITS OF CONSTRUCTION
- ROW
- TO BE REMOVED
- ROAD
- EDGE OF WATER

# CIVIL LEGEND

## MATERIALS IN PLAN/SECTION

- ACOUSTICAL CEILING TILE (SECTION)
- ASPHALT (PLAN OR SMALL-SCALE SECTION)
- ASPHALT (LARGE-SCALE SECTION)
- BATT INSULATION (SECTION)
- BRICK MASONRY (PLAN AND/OR SECTION)
- CHECKERED PLATE (PLAN)
- CONCRETE (PLAN AND/OR SECTION)
- CONCRETE MASONRY (PLAN AND/OR SECTION)
- DEMOLITION (PLAN AND/OR SECTION)
- EARTH (SECTION)
- FILTER POINT MAT (PLAN)
- FINISHED WOOD (SECTION)
- GLULAM LUMBER (SECTION)
- GRANULAR FILL (SECTION)
- GRATING (SECTION)
- GRATING (PLAN)
- GROUT (SECTION)
- GYPSUM BOARD (SECTION)
- METAL (SECTION)
- ORIENTED STRAND BOARD (SECTION)
- PARTICLE BOARD (SECTION)
- PLYWOOD (LARGE-SCALE SECTION)
- PLYWOOD (SMALL-SCALE SECTION)
- PRECAST CONCRETE (PLAN AND/OR SECTION)
- RIGID INSULATION (SECTION)
- RIPRAP (PLAN AND/OR SECTION)
- SAND (SECTION)
- SOD (SECTION)
- WEEP JOINT MORTAR PROTECTION SYSTEM (SECTION)
- WOOD – CONTINUOUS (SECTION)
- WOOD BLOCKING (SECTION)

## GENERAL NOTES:

1. THIS IS A STANDARD SHEET SHOWING COMMON SYMBOLOGY. ALL SYMBOLS ARE NOT NECESSARILY USED ON THIS PROJECT.
2. SCREENING OR SHADING OF WORK IS USED TO INDICATE EXISTING COMPONENTS OR TO DE-EMPHASIZE PROPOSED IMPROVEMENTS TO HIGHLIGHT SELECTED TRADE WORK. REFER TO CONTEXT OF EACH SHEET FOR USAGE.

RECORD DRAWING CERTIFICATE

THESE DRAWINGS REFLECT RECORDED INFORMATION OBTAINED DURING CONSTRUCTION. INFORMATION PROVIDED HEREIN IS ACCURATE TO THE BEST OF MY KNOWLEDGE.

NAME DATE

VILLAGE SAFE WATER

STATE OF ALASKA 49TH TODD B. BETHARD No. CE-10463 REGISTERED PROFESSIONAL ENGINEER

HDR Alaska, Inc.

City of Atka
Water and Sewer Improvements

CIVIL LEGEND

| REVISION | BY | DATE |
|---|---|---|
| ADEC PLAN REVIEW | SJM | 05/07 |

Project No. 28445
Date MAY 2007
Designed SJM
Drawn SJM
Approved TBB

Sheet No. C1.1
SHEET 8 OF 23

User: JUMARCUM Plot Date: 5/24/2007 8:11:53 AM, jumarcum
Drawing: C:\PWWORKING\SEA\JUMARCUM\D0116251\ATKA-C1.1.DWG – Layout: LAYOUT1
Xrefs: 22X34-V.DWG – Images:

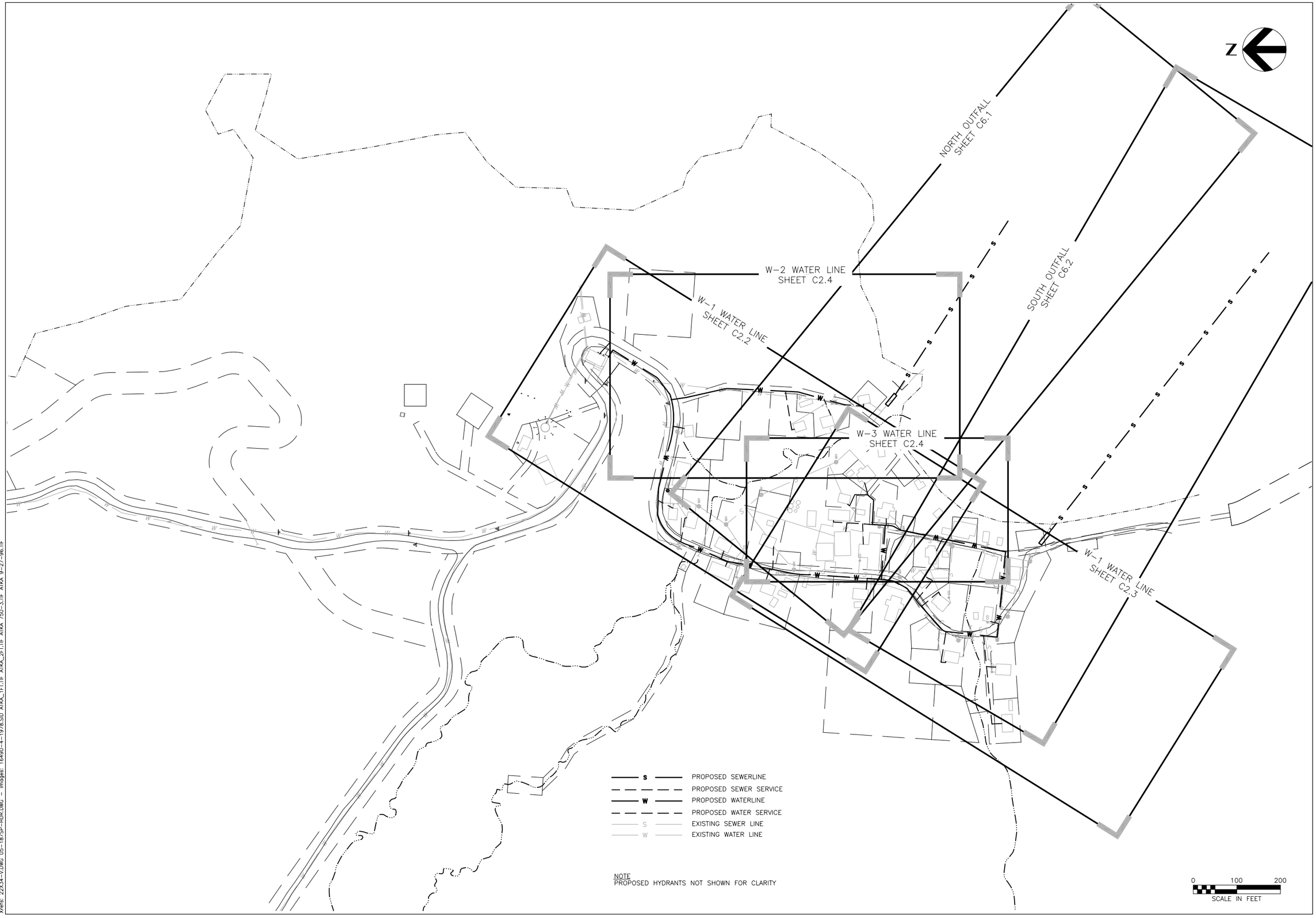


RECORD DRAWING CERTIFICATE

THESE DRAWINGS REFLECT RECORDED INFORMATION OBTAINED DURING CONSTRUCTION. INFORMATION PROVIDED HEREIN IS ACCURATE TO THE BEST OF MY KNOWLEDGE.

NAME DATE

VILLAGE SAFE WATER

STATE OF ALASKA 49TH TODD B. BETHARD No. CE-10463 REGISTERED PROFESSIONAL ENGINEER

HDR
HDR Alaska, Inc.

**City of Atka**
**Water and Sewer Improvements**

**PLAN AND PROFILE KEY MAP**

| REVISION | BY | DATE |
|---|---|---|
| ADEC PLAN REVIEW | SJM | 05/07 |

Project No. 28445
Date MAY 2007
Designed SJM
Drawn SJM
Approved TBB

Sheet No. **C1.2**
SHEET 9 OF 23

User: JUMARCUM
Drawing: C:\PWWORKING\SEA\jumarcum\d0116251\ATKA-C1.2.dwg, C1.2, 5/24/2007 8:13:47 AM, jumarcum
Xrefs: 22X34-V.DWG 05-187SP-HDR.DWG - Images: 16490-4-1978.SID ATKA_1FT.TIF ATKA_2FT.TIF ATKA 750-3.TIF ATKA 9-27-96.TIF

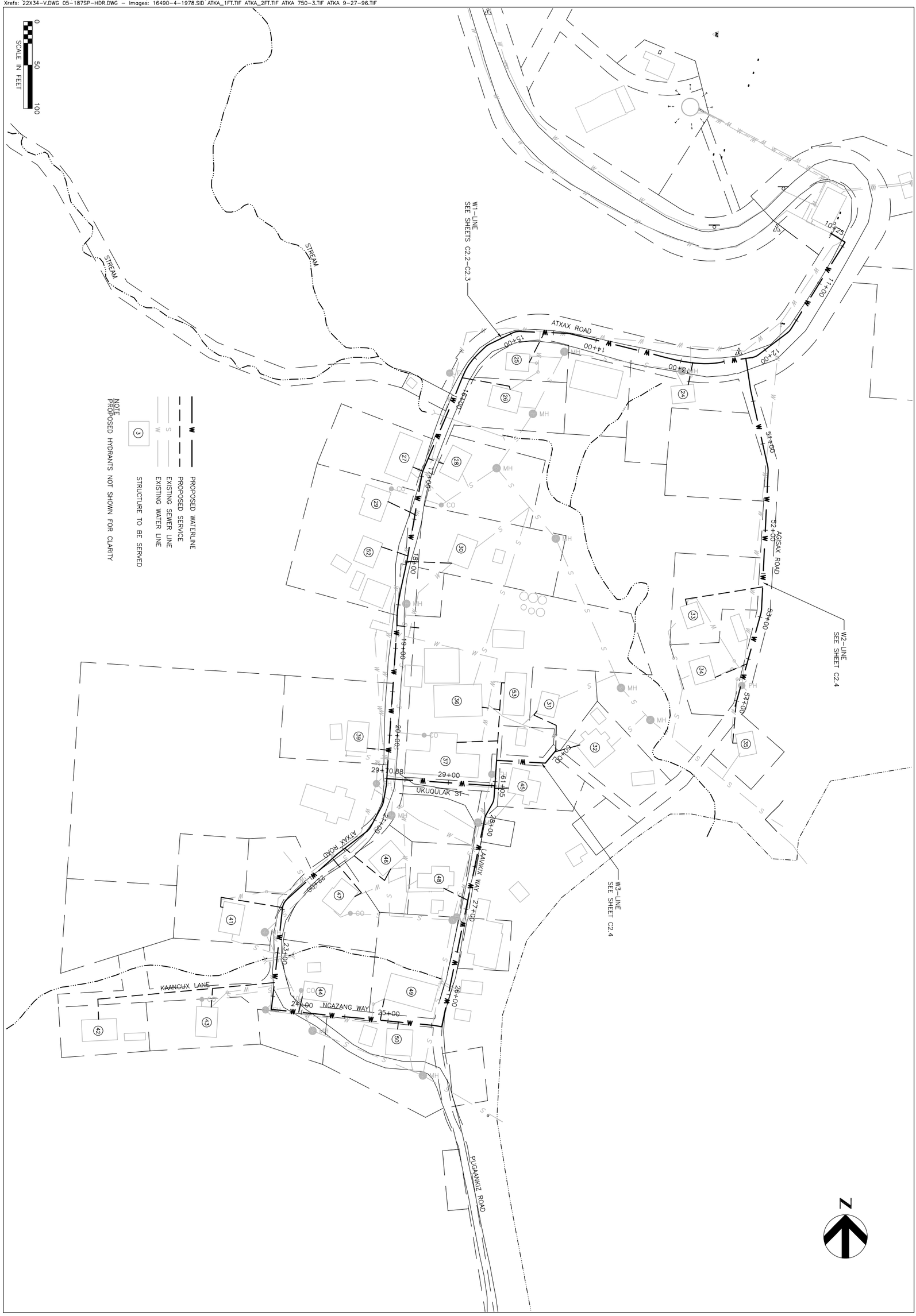


| Sheet No. | Project No. | Date | Designed | Drawn | Approved |
|---|---|---|---|---|---|
| C2.1 | 28445 | MAY 2007 | SJM | SJM | TBB |

SHEET 10 OF 23

| REVISION | BY | DATE |
|---|---|---|
| ADEC PLAN REVIEW | SJM | 05/07 |

**City of Atka**
**Water and Sewer Improvements**

**OLD ATKA VILLAGE**
**WATER LINE REPLACEMENT**
**SITE PLAN**

HDR Alaska, Inc.

STATE OF ALASKA
TODD B. BETHARD
No. CE-10463
REGISTERED PROFESSIONAL ENGINEER

**VILLAGE SAFE WATER**

RECORD DRAWING CERTIFICATE

THESE DRAWINGS REFLECT RECORDED INFORMATION OBTAINED DURING CONSTRUCTION. INFORMATION PROVIDED HEREIN IS ACCURATE TO THE BEST OF MY KNOWLEDGE.

NAME DATE

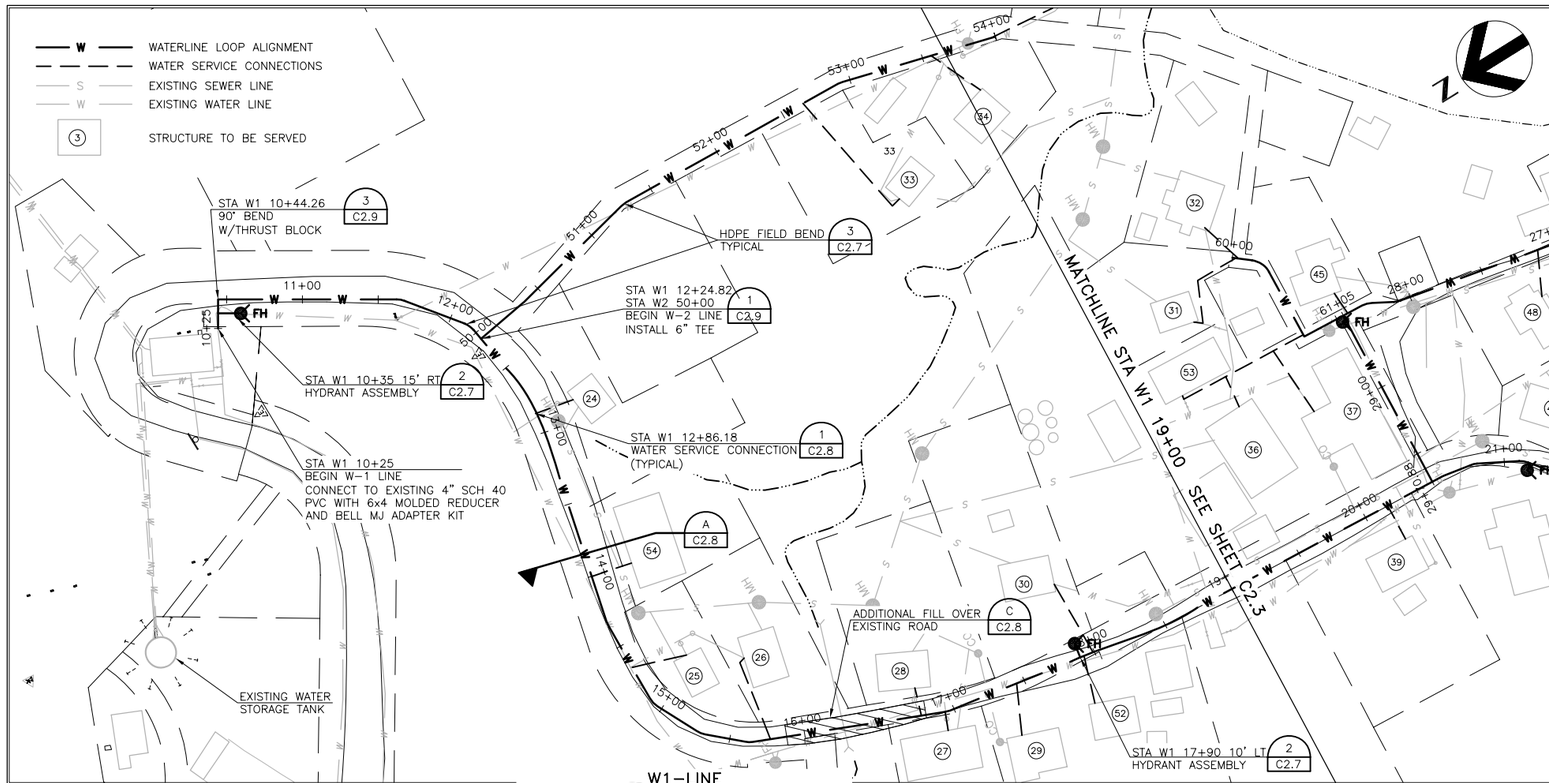


| HOUSE NO. | OWNER OR RESIDENT | WATER SERVICE STATION | SIZE |
|---|---|---|---|
| 24 | GEORGE KUDRIN | STA W1 12+86.18 | 1" |
| 25 | STEVEN HOLIKOFF | STA W1 14+65.96 | 1" |
| 26 | SIMEON SNIGAROFF | STA W1 15+77.22 | 1" |
| 27 | NICK DIRKS | STA W1 16+93.79 | 1" |
| 28 | HANK ANELON | STA W1 16+77.98 | 1" |
| 29 | GEORGE DIRKS | STA W1 17+44.55 | 1" |
| 30 | JIM SQUIRES | STA W1 17+99.13 | 1" |
| 52 | GEORGE DIRKS | STA W1 17+92.66 | 1" |
| 54 | AXTAM CORPORATION | STA W1 14+00.00 | 1" |

NOTES
1. EXISTING UTILITY LOCATIONS ARE APPROXIMATE. SUPERINTENDENT SHALL FIELD VERIFY LOCATIONS PRIOR TO CONSTRUCTION TO ACCOMMODATE ANY GRADE CHANGES REQUIRED.
2. REMOVE EXISTING WATERLINE PIPE WHEN ENCOUNTERED DURING CONSTRUCTION
3. UNLESS NOTED OTHERWISE, ALL NEW WATERLINE PIPE SHALL BE 6" SDR 11 HDPE PIPE

0 50 100
HORIZONTAL SCALE IN FEET
0 5 10
VERTICAL SCALE IN FEET

W1-LINE
STA W1 10+25 TO STA W1 19+00

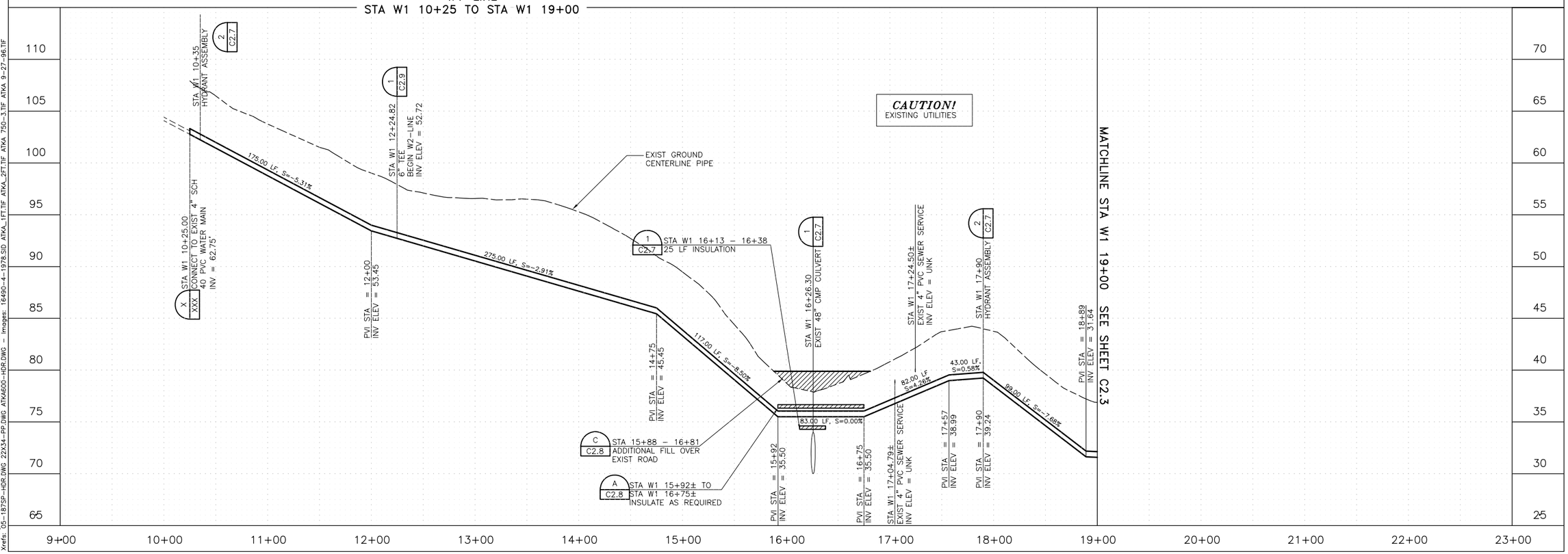


RECORD DRAWING CERTIFICATE
THESE DRAWINGS REFLECT RECORDED INFORMATION OBTAINED DURING CONSTRUCTION. INFORMATION PROVIDED HEREIN IS ACCURATE TO THE BEST OF MY KNOWLEDGE.
NAME DATE

VILLAGE SAFE WATER

STATE OF ALASKA 49TH TODD B. BETHARD No. CE-10463 REGISTERED PROFESSIONAL ENGINEER

HDR
HDR Alaska, Inc.

City of Atka
Water and Sewer Improvements

OLD ATKA VILLAGE
WATER LINE REPLACEMENT
PLAN AND PROFILE

| REVISION | |
|---|---|
| ADEC PLAN REVIEW | SJM05/07 |

Project No. 28445
Date MAY 2007
Designed SJM
Drawn SJM
Approved TBB

Sheet No. C2.2
SHEET 11 OF 23

User: JUMARCUM
Drawing: C:\PWWORKING\SEA\jumarcum\d0116251\ATKA-C2.2-3.DWG - Layout: C2.2
Xrefs: G5-187SP-HDR.DWG 22X34-PP.DWG ATKA600-HDR.DWG - Images: 16490-4-1978.SID ATKA_1FT.TIF ATKA_2FT.TIF ATKA 750-3.TIF ATKA 9-27-96.TIF
C:\PWWORKING\SEA\jumarcum\d0116251\ATKA-C2.2-3.dwg, C2.2, 5/24/2007 8:16:48 AM, jumarcum

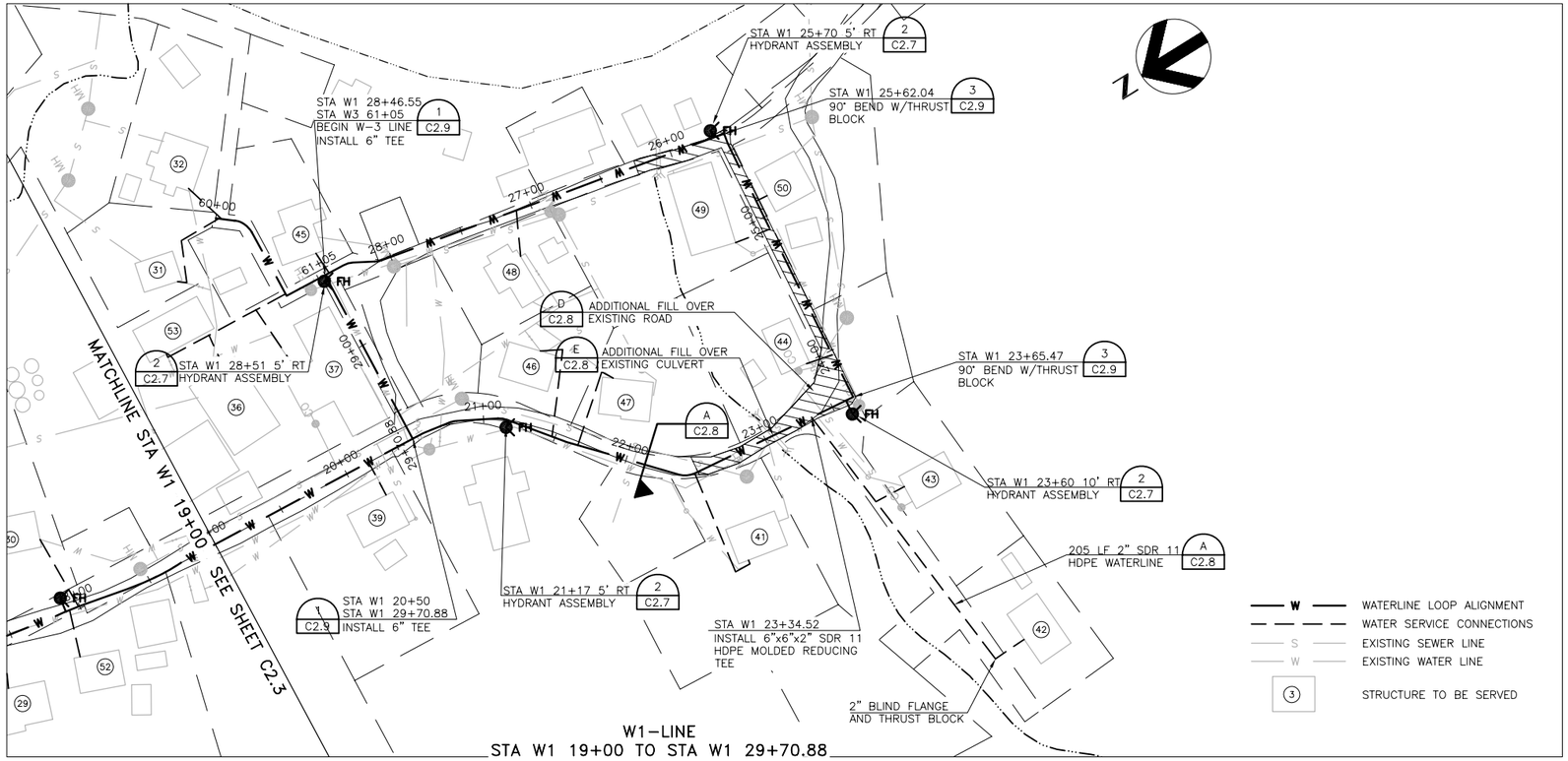


W1–LINE
STA W1 19+00 TO STA W1 29+70.88

| STRUCTURE NO. | OWNER OR RESIDENT | WATER SERVICE STATION | SIZE |
|---|---|---|---|
| 39 | VERA NEVZOROFF | STA W1 20+16.56 | 1" |
| 41 | CLARA SNIGAROFF | STA W1 22+47.65 | 1" |
| 42 | CLINIC/CITY OFFICE | STA W1 23+34.42 | 1" |
| 43 | JIMMY PROKOPEUFF | STA W1 23+34.42 | 1" |
| 44 | MARK SNIGAROFF | STA W1 23+97.01 | 1" |
| 45 | VASHA NEVZOROFF | STA W1 28+43.40 | 1" |
| 46 | JERRY ZAOCHNEY | STA W1 21+48.03 | 1" |
| 47 | MARTIN ZAOCHNEY | STA W1 21+66.30 | 1" |
| 48 | VICTOR GOLODOFF | STA W1 27+10.41 | 1" |
| 49 | ATKA NATIVE STORE | STA W1 24+91.07 | 1" |
| 50 | MOSES DIRKS | STA W1 25+11.94 | 1" |

STRUCTURES 42 AND 43 TO BE SERVED OFF A COMMON 2" WATER MAIN

NOTES
1. EXISTING UTILITY LOCATIONS ARE APPROXIMATE. SUPERINTENDENT SHALL FIELD VERIFY LOCATIONS PRIOR TO CONSTRUCTION TO ACCOMMODATE ANY GRADE CHANGES REQUIRED.
2. REMOVE EXISTING WATERLINE PIPE WHEN ENCOUNTERED DURING CONSTRUCTION
3. UNLESS NOTED OTHERWISE, ALL NEW WATERLINE PIPE SHALL BE 6" SDR 11 HDPE PIPE

0 50 100
HORIZONTAL SCALE IN FEET
0 5 10
VERTICAL SCALE IN FEET

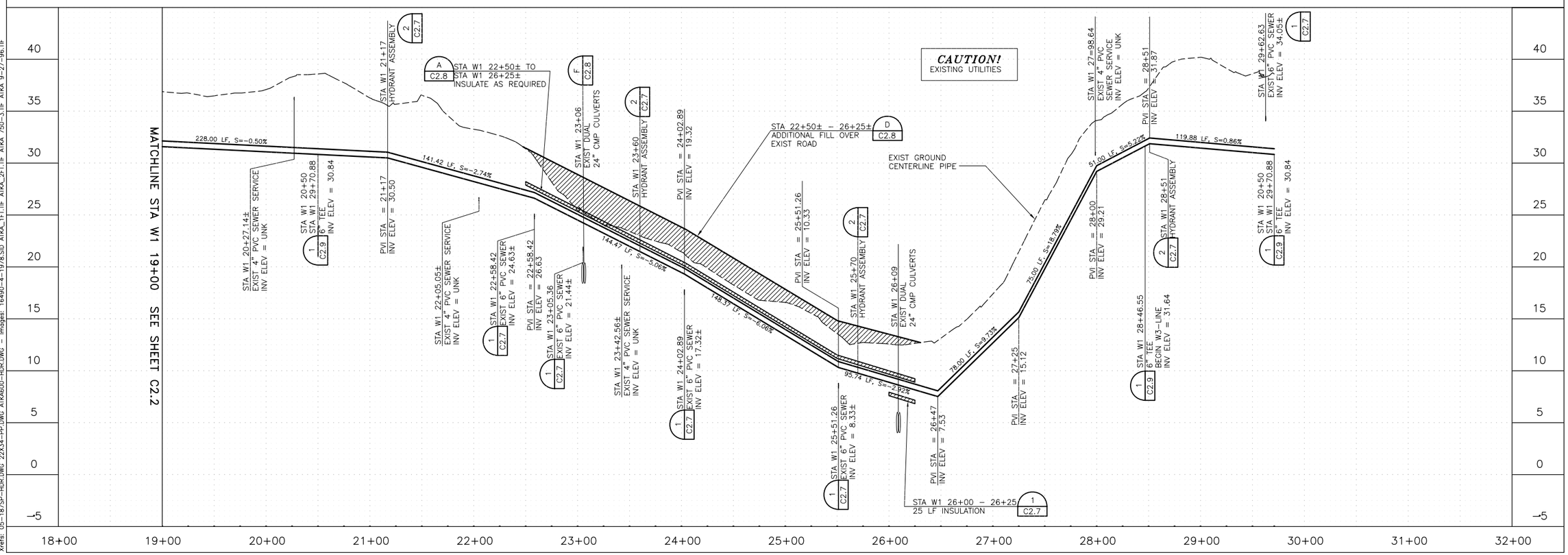


RECORD DRAWING CERTIFICATE
THESE DRAWINGS REFLECT RECORDED INFORMATION OBTAINED DURING CONSTRUCTION. INFORMATION PROVIDED HEREIN IS ACCURATE TO THE BEST OF MY KNOWLEDGE.
NAME DATE

VILLAGE SAFE WATER

STATE OF ALASKA 49TH
TODD B. BETHARD No. CE-10463
REGISTERED PROFESSIONAL ENGINEER

HDR
HDR Alaska, Inc.

City of Atka
Water and Sewer Improvements

OLD ATKA VILLAGE
WATER LINE REPLACEMENT
PLAN AND PROFILE

| REVISION | |
|---|---|
| ADEC PLAN REVIEW | SJM05/07 |

Project No. 28445
Date MAY 2007
Designed SJM
Drawn SJM
Approved TBB

Sheet No. C2.3
SHEET 12 OF 23

User: JUMARCUM Plotted on: Jun 05, 2007 - 8:17:21 AM
Drawing: C:\PWWORKING\SEA\jumarcum\d0116251\ATKA-C2.2-3.DWG - Layout: C2.3
Xrefs: 05-187SP-HDR.DWG 22X34-PP.DWG ATKA600-HDR.DWG - Images: 16490-4-1978.SID ATKA_1FT.TIF ATKA_2FT.TIF ATKA 750-3.TIF ATKA 9-27-96.TIF
C:\PWWORKING\SEA\jumarcum\d0116251\ATKA-C2.2-3.dwg, C2.3, 5/24/2007 8:17:21 AM, jumarcum

| STRUCTURE NO. | OWNER OR RESIDENT | WATER SERVICE STATION | SIZE |
|---|---|---|---|
| 31 | NEVZOROFF | STA W3 60+02 | 1" |
| 32 | THEODORE GOLLEY | STA W3 60+04 | 1" |
| 33 | GREG GOLODOFF | STA W2 52+65 | 1" |
| 34 | DENNIS GOLODOFF | STA W2 53+56 | 1" |
| 35 | GEORGE NEVZOROFF | STA W2 53+98 | 1" |
| 36 | IRA OFFICE | STA W3 60+75.69 | 1" |
| 37 | IRA COMMUNITY BLDG | STA W3 60+75.69 | 1" |
| 53 | UNKNOWN | STA W3 60+75.69 | 1" |

STRUCTURES 36, 37, AND 53 TO BE SERVED OFF A COMMON 2" WATER MAIN

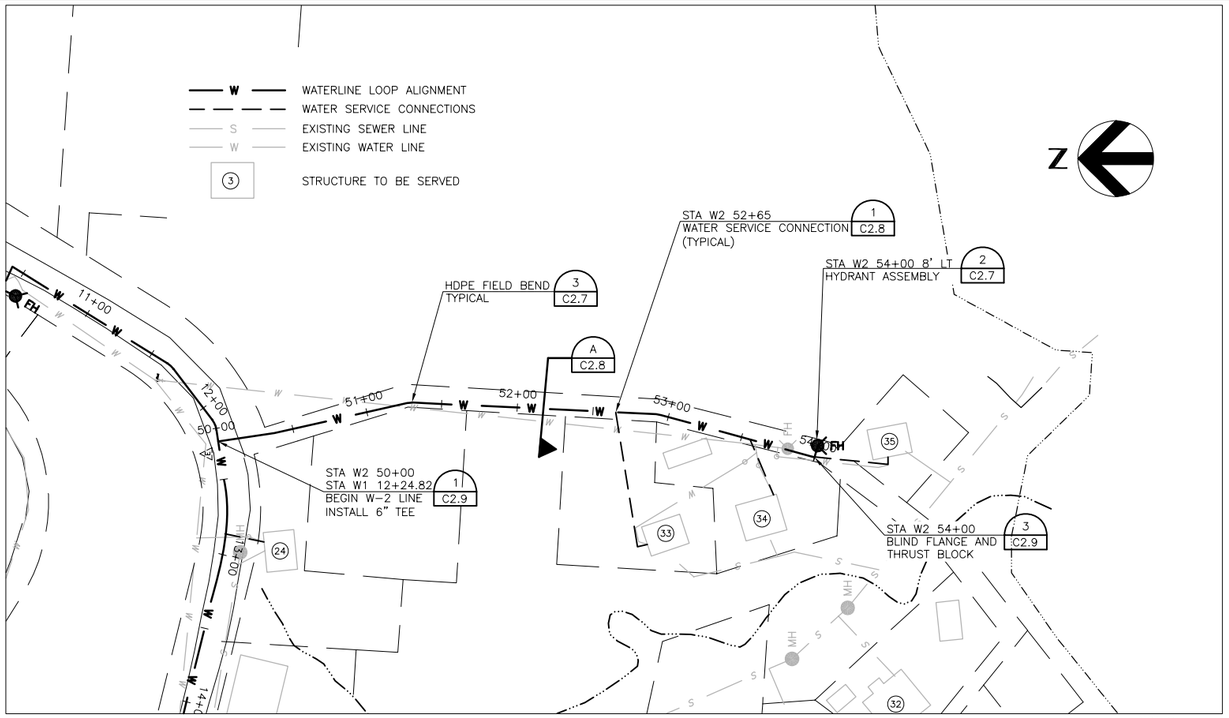


W2-LINE
STA W2 50+00 TO STA W1 54+00

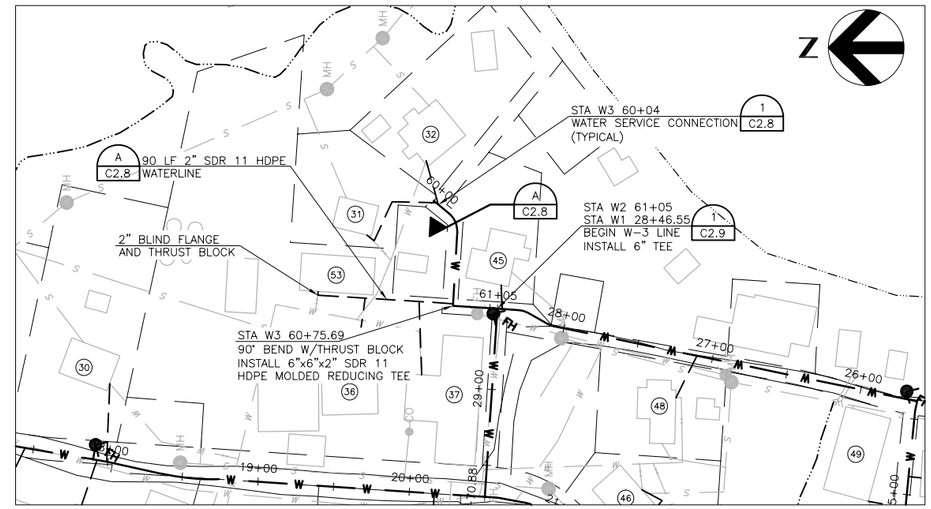


W3-LINE
STA W2 60+00 TO STA W1 61+05

NOTES
1. EXISTING UTILITY LOCATIONS ARE APPROXIMATE. SUPERINTENDENT SHALL FIELD VERIFY LOCATIONS PRIOR TO CONSTRUCTION TO ACCOMMODATE ANY GRADE CHANGES REQUIRED.
2. REMOVE EXISTING WATERLINE PIPE WHEN ENCOUNTERED DURING CONSTRUCTION
3. UNLESS NOTED OTHERWISE, ALL NEW WATERLINE PIPE SHALL BE 6" SDR 11 HDPE PIPE

0 50 100
HORIZONTAL SCALE IN FEET
0 5 10
VERTICAL SCALE IN FEET

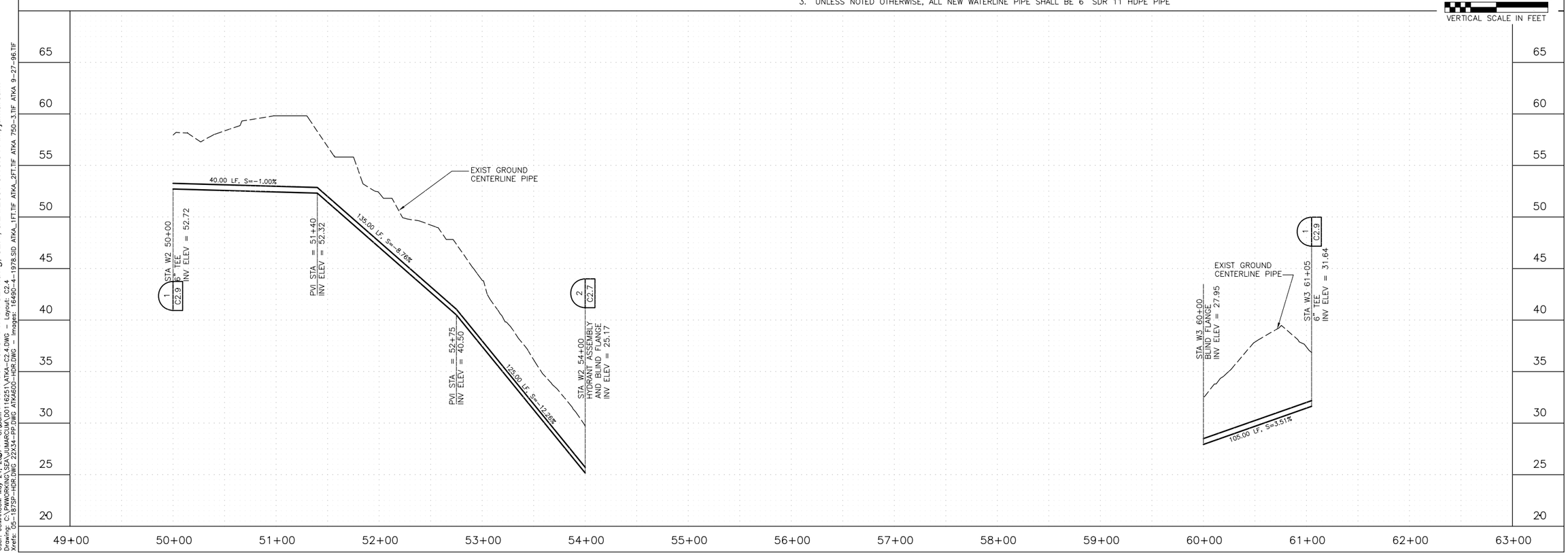


RECORD DRAWING CERTIFICATE
THESE DRAWINGS REFLECT RECORDED INFORMATION OBTAINED DURING CONSTRUCTION. INFORMATION PROVIDED HEREIN IS ACCURATE TO THE BEST OF MY KNOWLEDGE.
NAME DATE

VILLAGE SAFE WATER

STATE OF ALASKA 49TH
TODD B. BETHARD
No. CE-10463
REGISTERED PROFESSIONAL ENGINEER

HDR Alaska, Inc.

City of Atka
Water and Sewer Improvements

OLD ATKA VILLAGE
WATER LINE REPLACEMENT
PLAN AND PROFILE

| REVISION | |
|---|---|
| ADEC PLAN REVIEW | SJM05/07 |

Project No. 28445
Date MAY 2007
Designed SJM
Drawn SJM
Approved TBB

Sheet No. C2.4
SHEET 13 OF 23

User: JUMARCUM
Drawing: C:\PWWORKING\SEA\jumarcum\d0116251\ATKA-C2.4.dwg, C2.4, 5/24/2007 8:18:34 AM, jumarcum
Xrefs: 05-187SP-HDR.DWG 22X34-PP.DWG ATKA600-HDR.DWG - Images: 16490-4-1978.SID ATKA_1FT.TIF ATKA_2FT.TIF ATKA 750-3.TIF ATKA 9-27-96.TIF

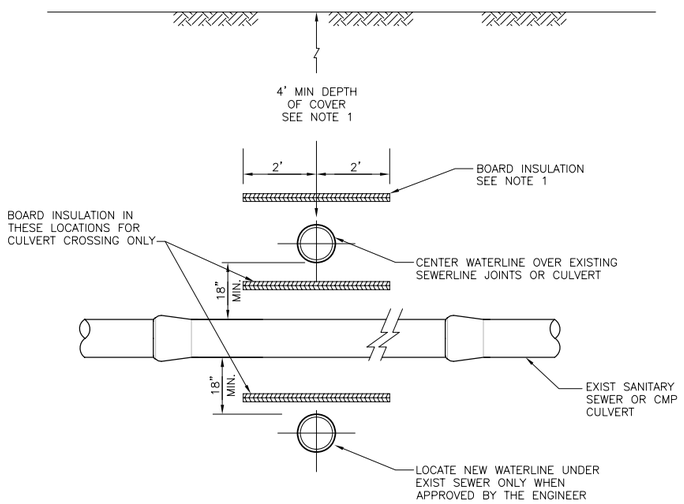


## SECTION A

NTS

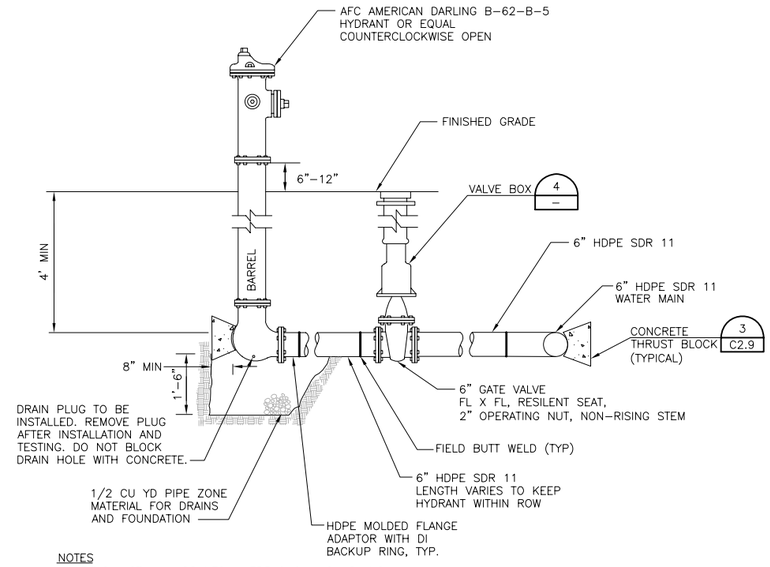


NOTES

1 FIELD INSTALL HYDRANTS WHERE SHOWN ON PLANS.

2 INSTALL BOLLARDS TO PROTECT HYDRANTS FROM DAMAGE, SEE 2 C2.9

## TYPICAL HYDRANT DETAIL 2

NTS

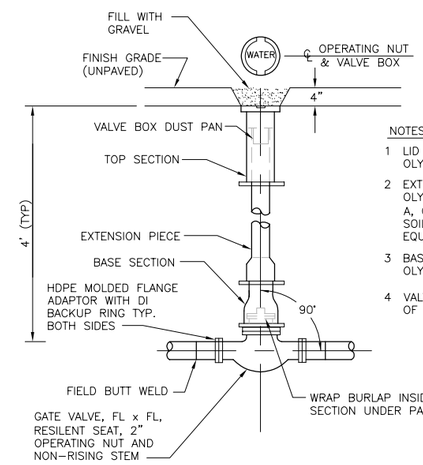


NOTES:

1 LID AND TOP SECTION TO BE OLYMPIC FOUNDRY OR EQUAL.

2 EXTENSION PIECE TO BE OLYMPIC FOUNDRY TYPE A, OF 5" DIA. SINGLE HUB SOIL PIPE OR APPROVED EQUAL.

3 BASE SECTION TO BE OLYMPIC FOUNDARY

4 VALVE BOX DUST PAN MADE OF 14 GAUGE TUBE.

## TYPICAL GATE VALVE BOX 4

NTS

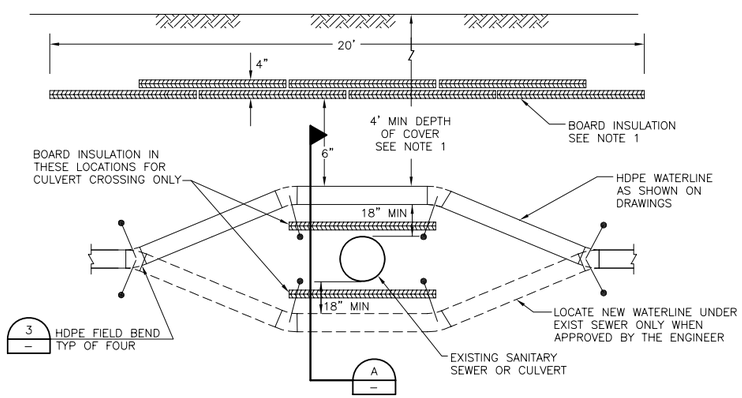


NOTES

1. IF DEPTH OF COVER IS BELOW 4' MIN, PROVIDE 4" INSULATION AS SHOWN

## WATER-SEWER/CULVERT CROSSING DETAIL 1

NTS

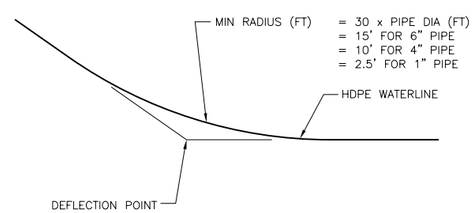


NOTE:

AT DEFLECTION POINTS SHOWN ON DRAWINGS, FIELD BEND PIPE WITHOUT KINKING AS SHOWN ABOVE. IF ADEQUATE SPACE IS NOT AVAILABLE FOR THE REQUIRED RADIUS, A FITTING OF THE DESIRED ANGLE MAY BE FUSED INTO THE PIPING SYSTEM TO OBTAIN THE NECESSARY CHANGE IN DIRECTION.

## TYPICAL HDPE FIELD BEND 3

NTS

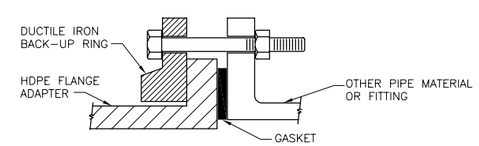


NOTE: ALL CONNECTIONS, MATERIALS & COMPONENTS SHALL MEET OR EXCEED THE PRESSURE RATING OF THE HDPE PIPE.

## TYPICAL HDPE FLANGE CONNECTION DETAIL 5

NTS

RECORD DRAWING CERTIFICATE

THESE DRAWINGS REFLECT RECORDED INFORMATION OBTAINED DURING CONSTRUCTION. INFORMATION PROVIDED HEREIN IS ACCURATE TO THE BEST OF MY KNOWLEDGE.

NAME DATE

VILLAGE SAFE WATER

STATE OF ALASKA 49TH TODD B. BETHARD No. CE-10463 REGISTERED PROFESSIONAL ENGINEER

HDR Alaska, Inc.

**City of Atka**
**Water and Sewer Improvements**

**OLD ATKA VILLAGE**
**WATER LINE REPLACEMENT**
**DETAILS**

| REVISION | BY | DATE |
|---|---|---|
| ADEC PLAN REVIEW | SJM | 05/07 |

Project No. 28445
Date MAY 2007
Designed SJM
Drawn SJM
Approved TBB

Sheet No. C2.7
SHEET 14 OF 23

User: JUMARCUM
Plotted on: May 24, 2007 - 8:19AM
Drawing: C:\PWWORKING\SEA\jumarcum\d0116251\ATKA-C2.7.dwg, C2.7, 5/24/2007 8:19:52 AM, jumarcum
Xrefs: 22X34-V.DWG - Images:

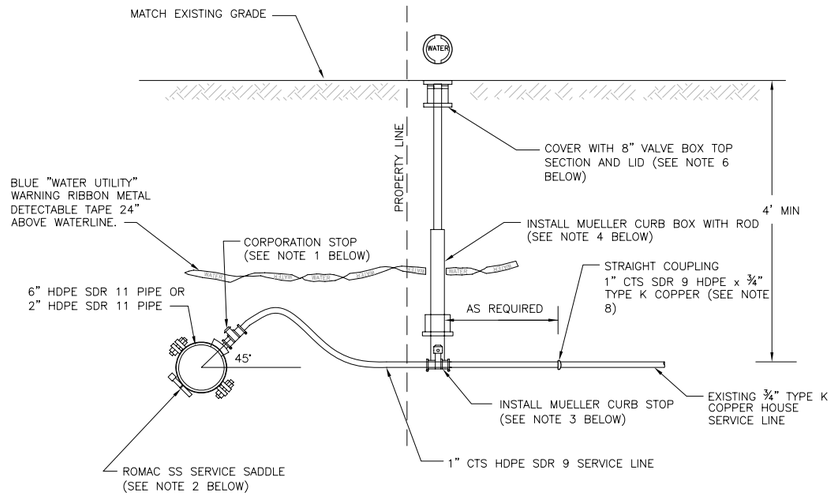


NOTES

1. USE 1" MUELLER CORPORATION STOP No. B-25008 FOR HDPE PIPE, CC x MUELLER 110 COMMPRESSION CONNECTION WITH SS LINER No. 504385.
2. USE ROMAC SS SERVICE SADDLE No. 306H-6.50 x 1" CC OR EQUAL WHEN TAPPING 6" HDPE AND ROMAC SS SERVICE SADDLE No. 306H-2.38 x 1" CC OR EQUAL WHEN TAPPING 2" HDPE.
3. USE 1" MUELLER CURB STOP No. H-15219 MUELLER 110 COMPRESSION CONNECTION FOR CTS BOTH ENDS OR EQUAL WITH SS LINER No. 504385 PER END.
4. USE MUELLER CURB BOX No. H-10306 OR EQUAL.
5. ROD TO BE ATTACHED TO CURB STOP WITH No. 6 GAUGE COPPER WIRE, NO SUBSTITUTIONS.
6. TOP OF VALVE BOX TO BE ADJUSTED SUCH THAT IT IS FLUSH WITH EXISTING GROUND AT EACH LOCATION.
7. 1" HDPE MUST BE COPPER TUBE SIZE
8. STRAIGHT COUPLING TO BE ACCOMPLISHED WITH MUELLER 1" x ¾" H-15403 WITH SS LINER No. 504385 ON 1" HDPE SDR 9 CTS SIDE.

## WATER SERVICE CONNECTION (1)

NTS

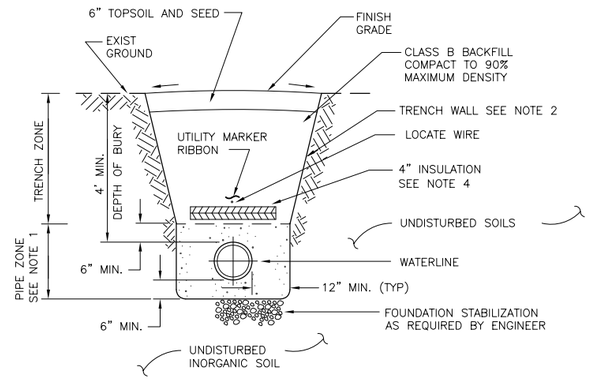


NOTES:

1. PIPE ZONE MATERIAL SHALL BE CLASS A BACKFILL. COMPACT TO 95% MAXIMUM DENSITY.
2. TRENCH WALL SHALL BE SLOPED OR SHORED IN CONFORMANCE WITH ALL APPLICABLE SAFETY STANDARDS.
3. REPLACE DISTURBED ROADWAY EMBANKMENT PER TYPICAL TRENCH/ROAD RESTORATION SECTION (SECTION B, THIS SHEET)
4. IF DEPTH OF BURY IS LESS THAN 4' MIN, PROVIDE 4" INSULATION AS SHOWN FOR A WIDTH OF 4' CENTERED ON PIPE

## TYPICAL TRENCH SECTION (A)

NTS

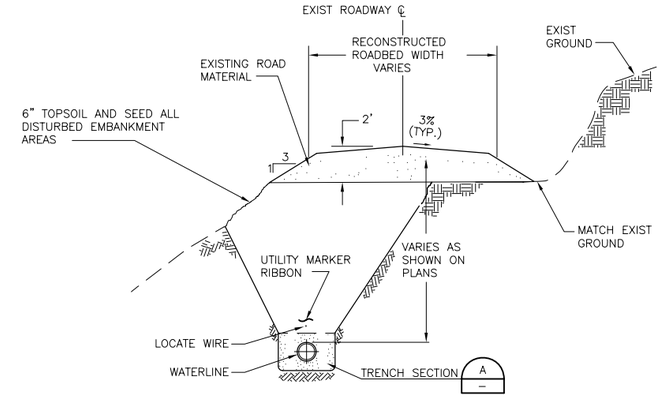


## TYPICAL TRENCH SECTION UNDER ROAD RESTORATION (B)

NTS

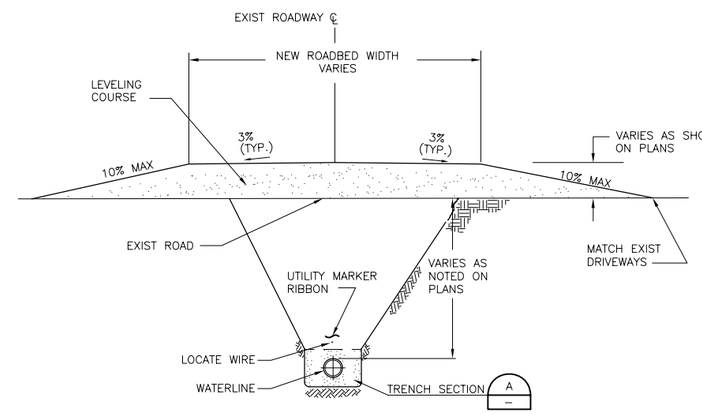


## TYPICAL TRENCH SECTION ROAD FILL AREA (D)

NTS

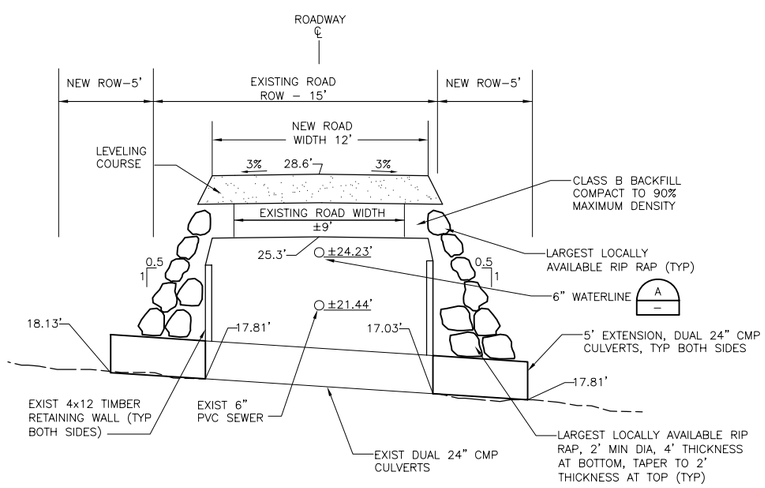


## SECTION (E)

NTS

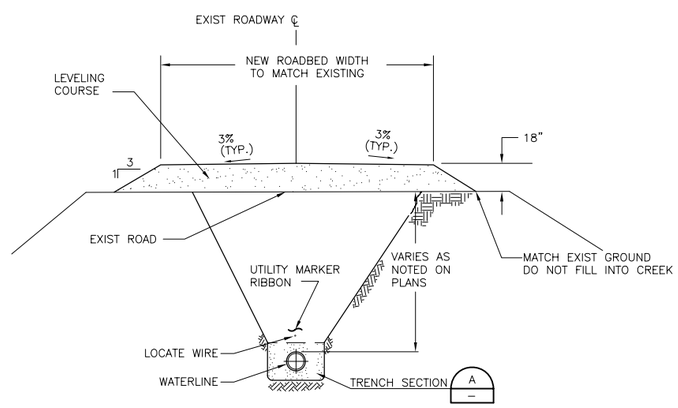


## TYPICAL TRENCH SECTION ROAD FILL AREA (C)

NTS

RECORD DRAWING CERTIFICATE

THESE DRAWINGS REFLECT RECORDED INFORMATION OBTAINED DURING CONSTRUCTION. INFORMATION PROVIDED HEREIN IS ACCURATE TO THE BEST OF MY KNOWLEDGE.

NAME DATE

VILLAGE SAFE WATER

STATE OF ALASKA 49TH TODD B. BETHARD No. CE-10463 REGISTERED PROFESSIONAL ENGINEER

HDR Alaska, Inc.

City of Atka
Water and Sewer Improvements

OLD ATKA VILLAGE
WATER LINE REPLACEMENT
DETAILS

| REVISION | BY | DATE |
|---|---|---|
| ADEC PLAN REVIEW | SJM | 05/07 |

Project No. 28445
Date MAY 2007
Designed SJM
Drawn SJM
Approved TBB

Sheet No. C2.8

SHEET 15 OF 23

User: JUMARCUM
Drawing: C:\PWWORKING\SEA\jumarcum\d0116251\ATKA-C2.8.dwg, C2.8, 5/24/2007 8:21:07 AM, jumarcum
Xrefs: 22X34-V.DWG - Images:
C:\PWWORKING\SEA\JUMARCUM\D0116251\ATKA-C2.8.DWG - Layout: C2.8

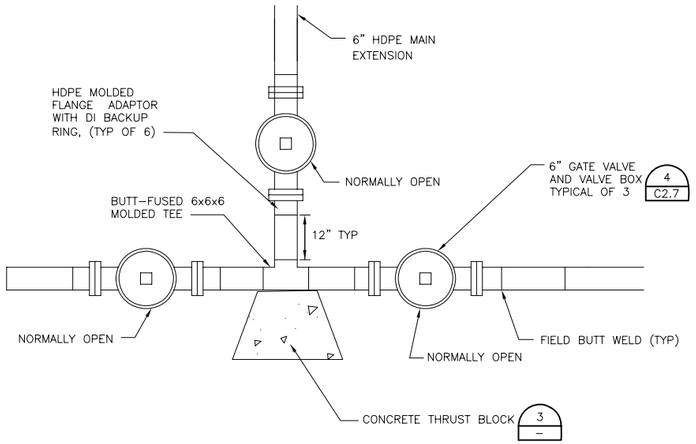


## 6" LOOP TEE CONNECTION 1 –

NTS

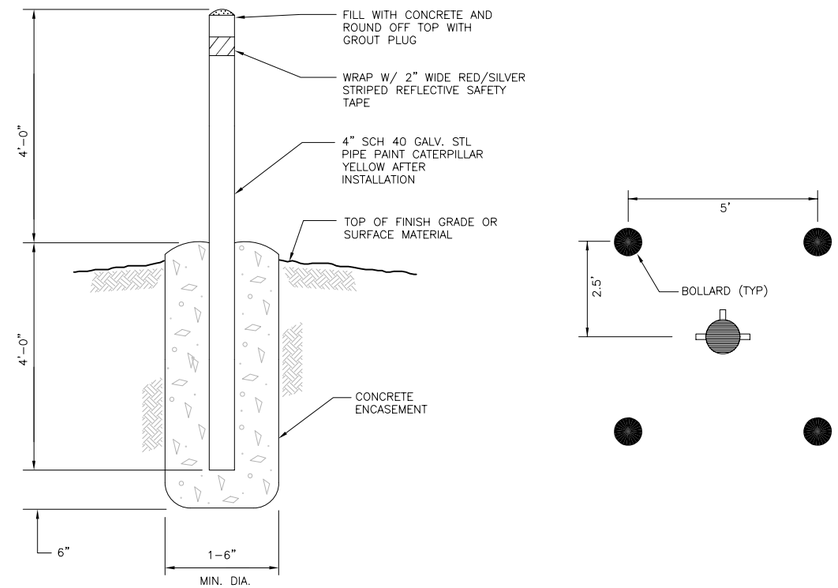


## BOLLARD DETAIL AND PLAN 2 –

NTS

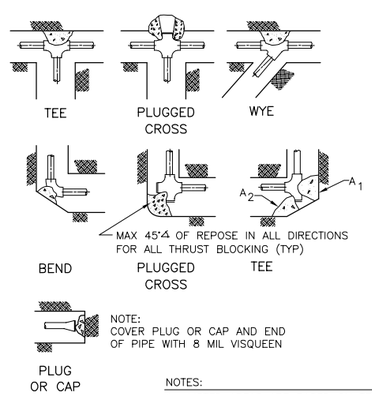


NOTES:

1 CONCRETE THRUST BLOCKING TO BE POURED AGAINST UNDISTURBED EARTH.

2 KEEP CONCRETE CLEAR OF JOINT AND ACCESSORIES.

3 REQUIRED BEARING AREAS AT FITTING TO BE AS INDICATED BELOW, ADJUST IF NECESSARY, TO CONFORM TO TEST PRESSURE(S) AND ALLOWABLE SOIL BEARING STRESS(ES) IDENTIFIED DURING CONSTRUCTION.

| BEARING AREA OF THRUST BLOCK IN SQUARE FEET | | | | | | | |
|---|---|---|---|---|---|---|---|
| FITTING SIZE | TEE,WYE PLUG OR CAP | 90°BEND PLUGGED CROSS | TEE PLUGGED ON RUN | | 45° BEND | 22½° BEND | 11¼° BEND |
| | | | A 1 | A 2 | | | |
| 4 | 1.0 | 1.4 | 1.9 | 1.4 | 1.0 | – | – |
| 6 | 2.1 | 3.0 | 4.3 | 3.0 | 1.6 | 1.0 | – |
| 8 | 3.8 | 5.3 | 7.6 | 5.4 | 2.9 | 1.5 | 1.0 |
| 10 | 5.9 | 8.4 | 11.8 | 8.4 | 4.6 | 2.4 | 1.2 |
| 12 | 8.5 | 12.0 | 17.0 | 12.0 | 6.6 | 3.4 | 1.7 |

NOTES:

1 LISTED AREAS ARE BASED ON TEST PRESSURE OF 100 P.S.I. AND AN ALLOWABLE SOIL BEARING STRESS OF 2,000 LBS PER SQUARE FOOT. TO COMPUTE BEARING AREAS FOR DIFFERENT TEST PRESSURES USE THE FOLLOWING EQUATION:

2 BEARING AREA = (TEST PRESSURE/100) x (TABLE VALUE).

## THRUST BLOCK DETAIL 3 –

NTS

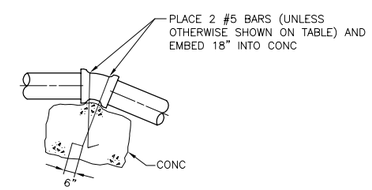


| FITTING SIZE | VOLUME OF ANCHOR BLOCK IN CUBIC YARDS | | | |
|---|---|---|---|---|
| | 90° BEND | 45° BEND | 22½° BEND | 11¼° BEND |
| 4" | 0.8 | 0.6 | 0.2 | 0.1 |
| 6" | 1.3 | 0.8 | 0.4 | 0.2 |
| 8" | 2.3 | 1.1 | 0.6 | 0.4 |
| 10" | 3.7 | 1.8 | 0.8 | 0.6 |
| 12" | 5.5 | 2.8 | 1.2 | 0.8 |

NOTES:

1 FOR VERTICAL BENDS THAT THRUST DOWN, REFER TO THRUST BLOCK DETAIL, THIS SHEET.
2 REBAR SHALL BE EPOXY COATED GRADE 60.
3 ABOVE VALUES ARE BASED ON 100 PSI PRESSURE. FOR OTHER TEST PRESSURES, PROPORTION AS FOLLOWS: BLOCK VOLUME = TEST PRESSURE/100 X TABLE VALUE.

## VERTICAL ANCHOR BLOCK DETAIL 4 –

NTS

RECORD DRAWING CERTIFICATE

THESE DRAWINGS REFLECT RECORDED INFORMATION OBTAINED DURING CONSTRUCTION. INFORMATION PROVIDED HEREIN IS ACCURATE TO THE BEST OF MY KNOWLEDGE.

NAME DATE

VILLAGE SAFE WATER

STATE OF ALASKA 49TH TODD B. BETHARD No. CE-10463 REGISTERED PROFESSIONAL ENGINEER

HDR Alaska, Inc.

City of Atka
Water and Sewer Improvements

OLD ATKA VILLAGE WATERLINE REPLACEMENT DETAILS

| REVISION | BY | DATE |
|---|---|---|
| ADEC PLAN REVIEW | SJM | 05/07 |

Project No. 28445
Date MAY 2007
Designed SJM
Drawn SJM
Approved TBB

Sheet No. C2.9
SHEET 16 OF 23

User: JUMARCUM
Drawing: C:\PWWORKING\SEA\jumarcum\d0116251\ATKA-C2.9.dwg, Layout1, 5/24/2007 8:22:15 AM, jumarcum
Xrefs: 22X34-V.DWG – Images:

User: JUMARCUM
Drawing: C:\PWWORKING\SEA\jumarcum\d0116251\ATKA-C6.0.dwg, Layout1, 5/24/2007 8:23:26 AM, jumarcum
Xrefs: 05-187SP-HDR.DWG 22X34-V.DWG - Images: 16490-4-1978.SID ATKA_1FT.TIF ATKA_2FT.TIF ATKA 750-3.TIF ATKA 9-27-96.TIF

RECORD DRAWING CERTIFICATE

THESE DRAWINGS REFLECT RECORDED INFORMATION OBTAINED DURING CONSTRUCTION. INFORMATION PROVIDED HEREIN IS ACCURATE TO THE BEST OF MY KNOWLEDGE.

NAME DATE

VILLAGE SAFE WATER

STATE OF ALASKA 49TH
TODD B. BETHARD
No. CE-10463
REGISTERED PROFESSIONAL ENGINEER

HDR Alaska, Inc.

**City of Atka**
**Water and Sewer Improvements**

**OLD ATKA VILLAGE OUTFALLS**
**NORTH AND SOUTH OUTFALLS**
**SITE PLAN**

| REVISION | BY | DATE |
|---|---|---|
| ADEC PLAN REVIEW | SJM | 05/07 |

Project No. 28445
Date MAY 2007
Designed SJM
Drawn SJM
Approved TBB

Sheet No. **C6.0**
SHEET 17 OF 23

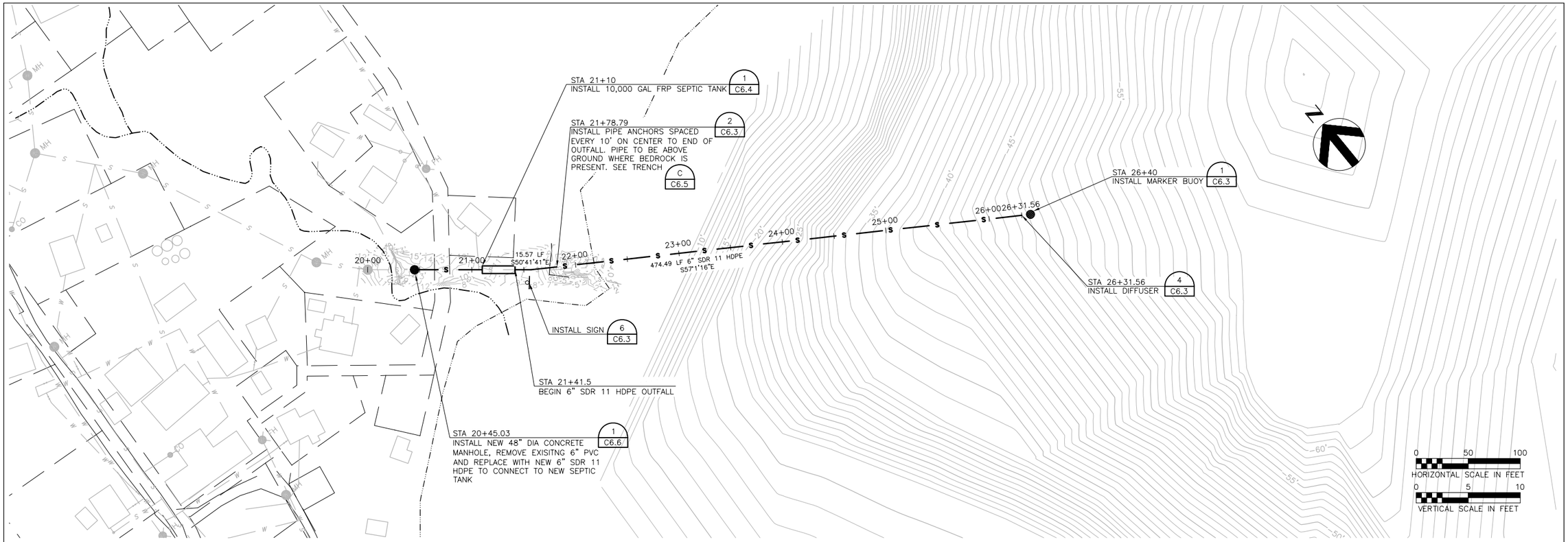


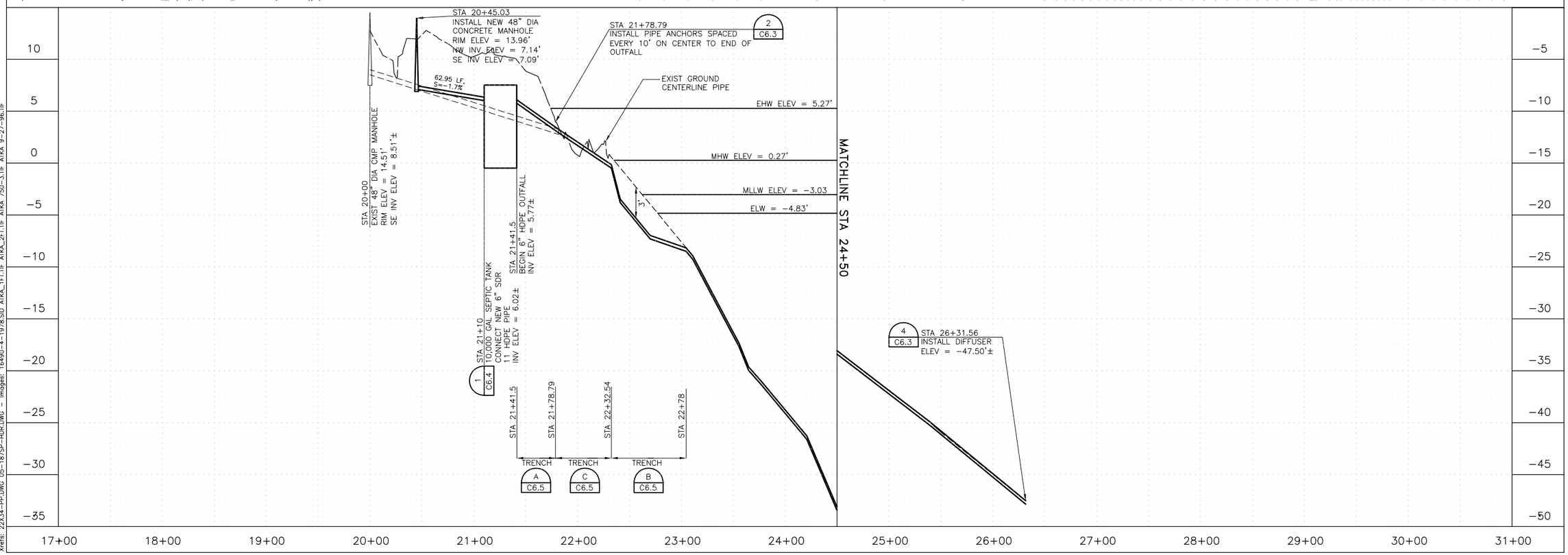


RECORD DRAWING CERTIFICATE

THESE DRAWINGS REFLECT RECORDED INFORMATION OBTAINED DURING CONSTRUCTION. INFORMATION PROVIDED HEREIN IS ACCURATE TO THE BEST OF MY KNOWLEDGE.

NAME DATE

VILLAGE SAFE WATER

STATE OF ALASKA 49TH TODD B. BETHARD No. CE-10463 REGISTERED PROFESSIONAL ENGINEER

HDR Alaska, Inc.

**City of Atka**
**Water and Sewer Improvements**

**OLD ATKA VILLAGE OUTFALLS**
**NORTH OUTFALL**
**PLAN AND PROFILE**

| REVISION | |
|---|---|
| ADEC PLAN REVIEW | SJM05/07 |

Project No. 28445
Date MAY 2007
Designed SJM
Drawn SJM
Approved TBB

Sheet No. **C6.1**
SHEET 18 OF 23

User: JUMARCUM
Drawing: C:\PWWORKING\SEA\jumarcum\d0116251\ATKA-C6.1.DWG - Layout: LAYOUT1
Xrefs: 22X34-PP.DWG 05-1875P-HDR.DWG - Images: 16490-4-1978.SID ATKA_1FT.TIF ATKA_2FT.TIF ATKA 750-3.TIF ATKA 9-27-96.TIF
C:\PWWORKING\SEA\jumarcum\d0116251\ATKA-C6.1.dwg, Layout1, 5/24/2007 8:24:48 AM, jumarcum

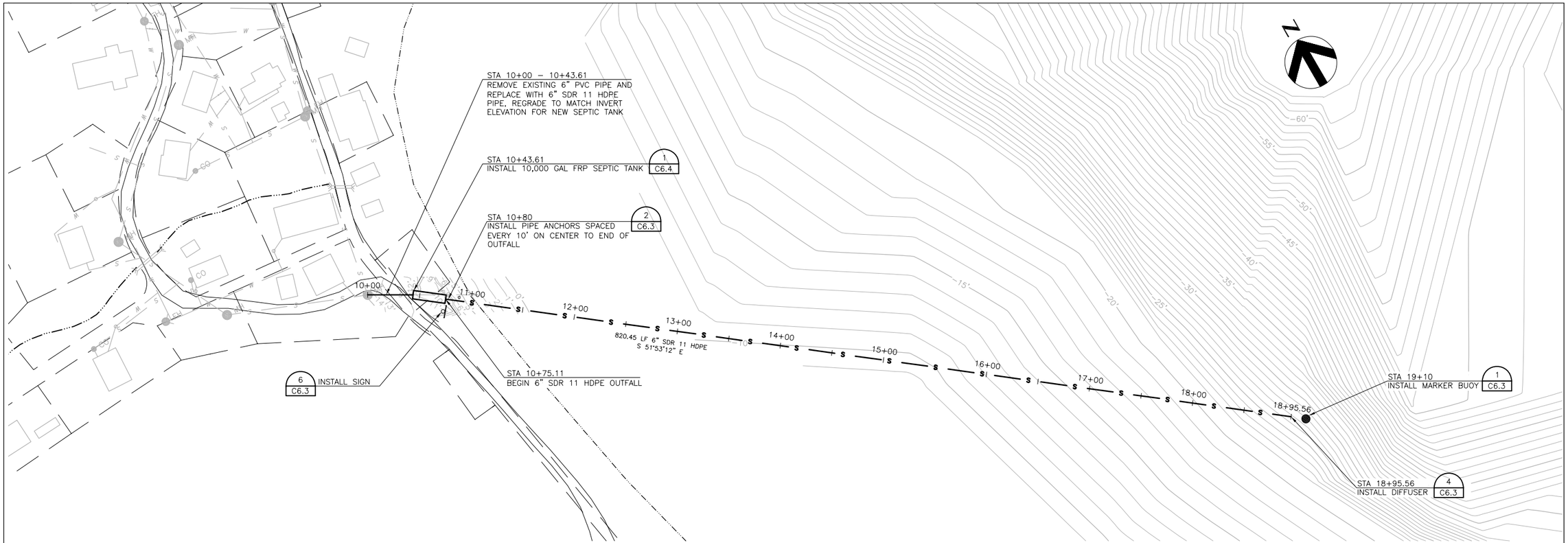


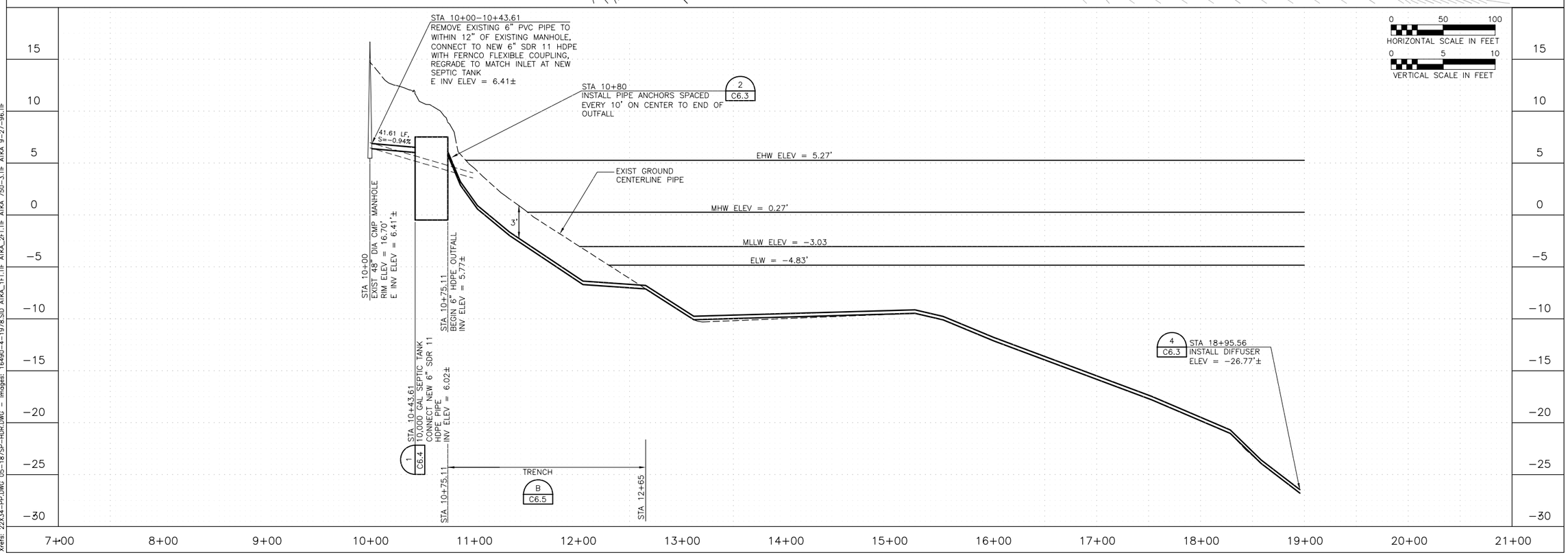


RECORD DRAWING CERTIFICATE

THESE DRAWINGS REFLECT RECORDED INFORMATION OBTAINED DURING CONSTRUCTION. INFORMATION PROVIDED HEREIN IS ACCURATE TO THE BEST OF MY KNOWLEDGE.

NAME DATE

VILLAGE SAFE WATER

STATE OF ALASKA 49TH TODD B. BETHARD No. CE-10463 REGISTERED PROFESSIONAL ENGINEER

HDR Alaska, Inc.

**City of Atka**
**Water and Sewer Improvements**

**OLD ATKA VILLAGE OUTFALLS**
**SOUTH OUTFALL**
**PLAN AND PROFILE**

| REVISION | |
|---|---|
| ADEC PLAN REVIEW | SJM05/07 |

Project No. 28445
Date MAY 2007
Designed SJM
Drawn SJM
Approved TBB

Sheet No. **C6.2**
SHEET 19 OF 23

User: JUMARCUM
Drawing: C:\PWWORKING\SEA\jumarcum\d0116251\ATKA-C6.2.dwg – Layout: LAYOUT1
Xrefs: 22X34-PP.DWG 05-1879P-HDR.DWG – Images: 16490-4-1978.SID ATKA_1FT.TIF ATKA_2FT.TIF ATKA 750-3.TIF ATKA 9-27-96.TIF
C:\PWWORKING\SEA\jumarcum\d0116251\ATKA-C6.2.dwg, Layout1, 5/24/2007 8:26:03 AM, jumarcum

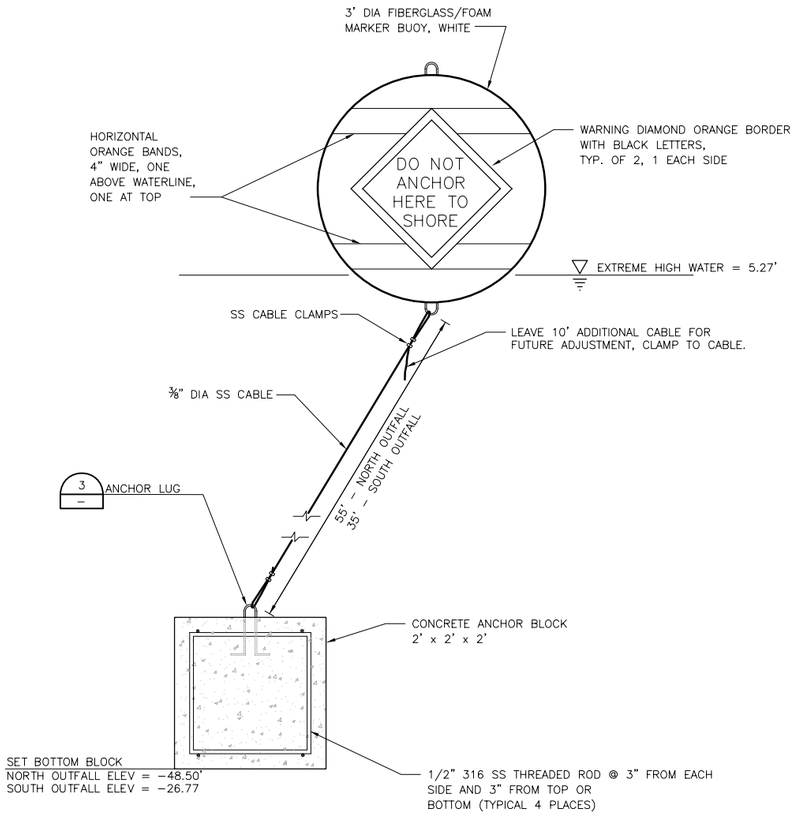


## OUTFALL MARKER BUOY (1)
NTS

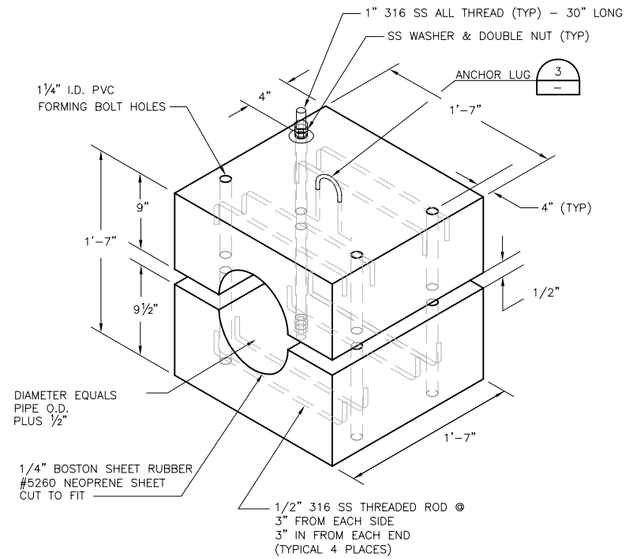


## PIPE ANCHOR DETAIL (2)
NTS

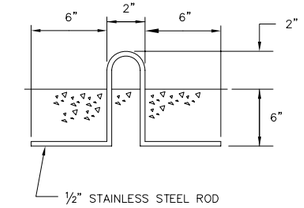


## ANCHOR LUG (3)
NTS

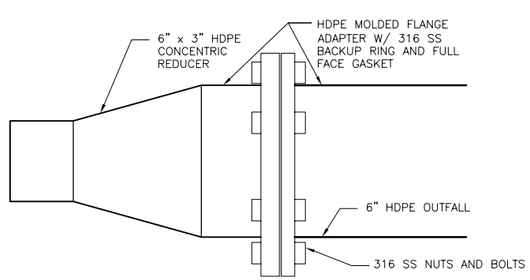


## DIFFUSER DETAIL (4)
NTS

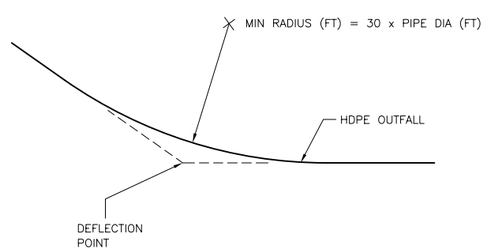


NOTE:

AT DEFLECTION POINTS SHOWN ON DRAWINGS, FIELD BEND PIPE WITHOUT KINKING AS SHOWN ABOVE.

## TYPICAL HDPE FIELD BEND DETAIL (5)
NTS

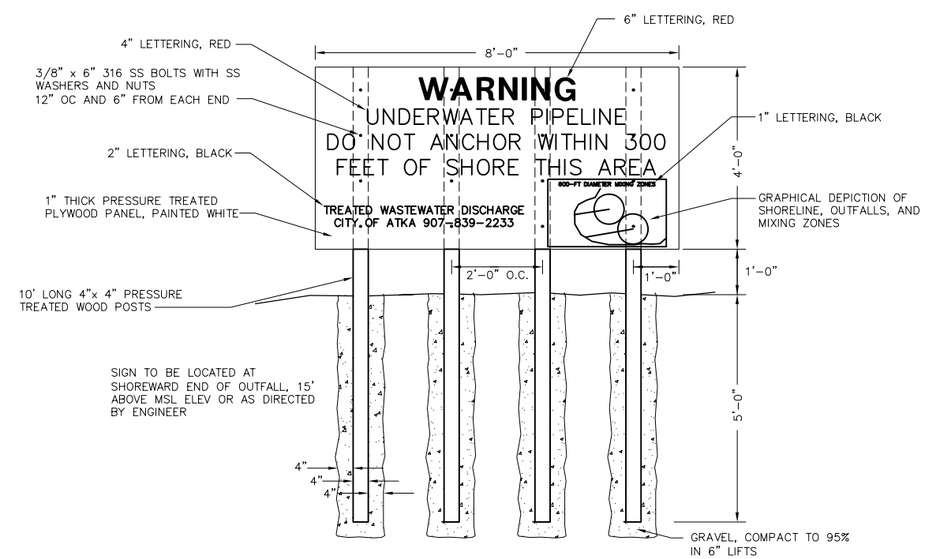


## SIGN DETAIL (6)
NTS

RECORD DRAWING CERTIFICATE

THESE DRAWINGS REFLECT RECORDED INFORMATION OBTAINED DURING CONSTRUCTION. INFORMATION PROVIDED HEREIN IS ACCURATE TO THE BEST OF MY KNOWLEDGE.

NAME DATE

VILLAGE SAFE WATER

STATE OF ALASKA 49TH TODD B. BETHARD No. CE-10463 REGISTERED PROFESSIONAL ENGINEER

HDR Alaska, Inc.

City of Atka
Water and Sewer Improvements

OLD ATKA VILLAGE OUTFALLS DETAILS

| REVISION | BY | DATE |
|---|---|---|
| ADEC PLAN REVIEW | SJM | 05/07 |

Project No. 28445
Date MAY 2007
Designed SJM
Drawn SJM
Approved TBB

Sheet No. C6.3
SHEET 20 OF 23

User: JUMARCUM
Plotted on: Thursday, May 24, 2007 - 8:26:54 AM
Drawing: C:\PWWORKING\SEA\jumarcum\d0116251\ATKA-C6.3.dwg, Layout1, 5/24/2007 8:26:54 AM, jumarcum
Xrefs: 22X34-V.DWG – Images:
C:\PWWORKING\SEA\jumarcum\d0116251\ATKA-C6.3.DWG – Layout: LAYOUT1

(A) 6" DIA SCH 40 PVC INLET PIPE WITH INTERNAL SANITARY TEE AND PIPING CONNECT WITH FLEXIBLE 6-IN COUPLING ADAPTER – FERNCO 1056-66 SERIES OR EQUAL

(B) 6" DIA SCH 40 PVC OUTLET PIPE WITH INTERNAL SANITARY TEE AND PIPING

(C) RISER PIPE, FOR 30" (NOMINAL) ACCESS OPENING– VERTICAL CUT TO SIZE 4" ABOVE GROUND SURFACE

(D) 7/8 PLATE BAFFLE WITH 6 3/4" DIA HOLE (75" INVERT)

(E) 6" DIA SCH 40 PVC CROSSOVER ELBOW AND PIPE

(F) LIFTING LUG

(G) 16' CONCRETE DEADMEN (4 TOTAL) OR MANUFACTURER'S APPROVED ANCHORING SYSTEM

HOLD DOWN STRAP LOCATION

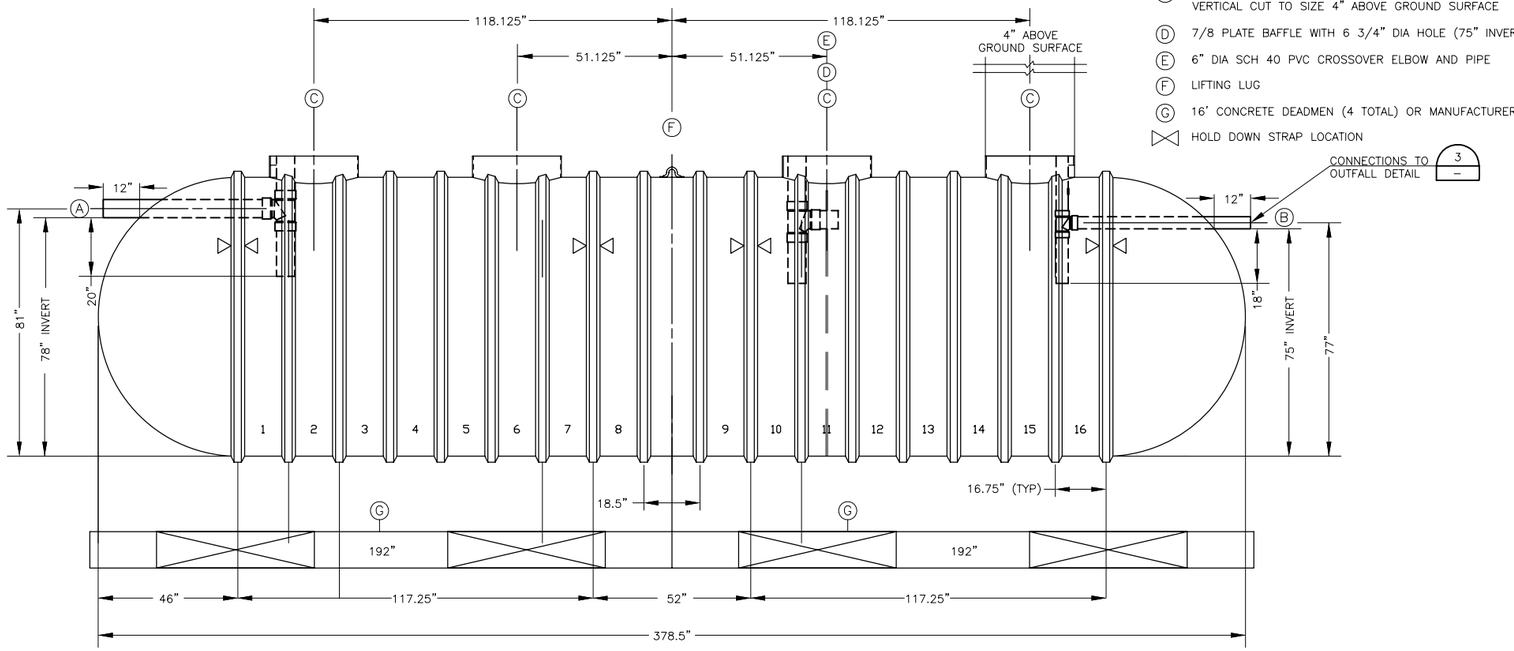


## 10,000 GALLON FIBERGLASS SEPTIC TANK 1 –

NTS

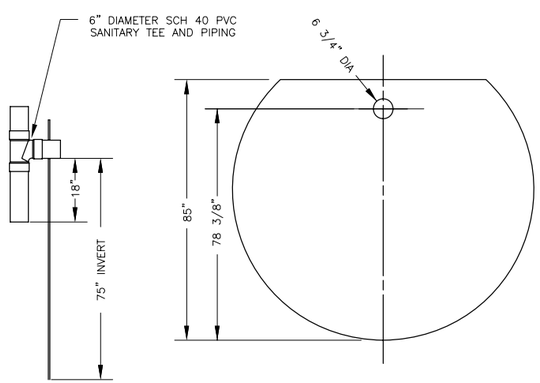


## CROSS OVER PIPE AND 7/8 BAFFLE DETAIL 2 –

NTS

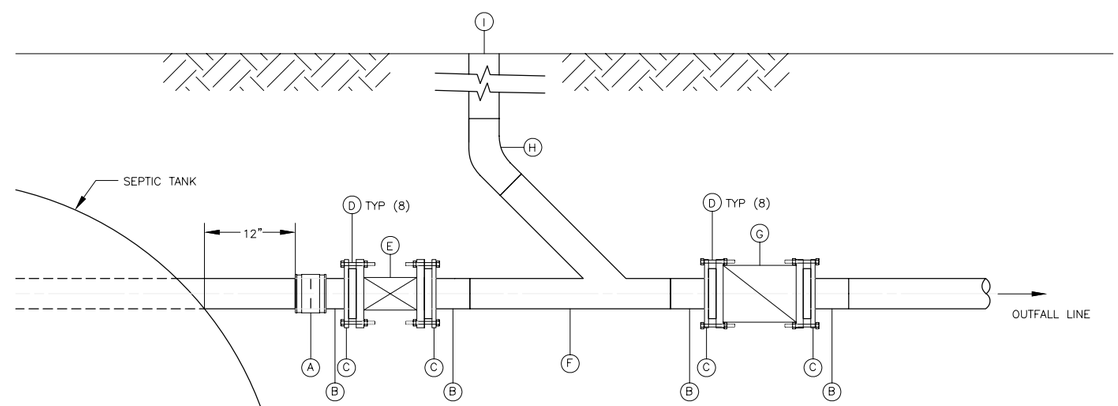


MATERIALS REQUIRED

(A) FLEXIBLE 6-IN COUPLING ADAPTER– FERNCO 1056-66 SERIES OR EQUAL

(B) 6" HDPE FLANGE ADAPTER

(C) STAINLESS STEEL BACK UP RING FOR USE WITH FLANGE ADAPTER W/ (8) 0.875-IN DIA BOLT HOLES

(D) 4-IN BY 0.75-IN DIA STAINLESS STEEL BOLTS FOR FLANGE CONNECTIONS– TYPICAL 8 EACH FLANGE CONNECTION

(E) RESILIENT WEDGE 6-IN GATE VALVE – FL. X FL. MUELLER A-2360 OR EQUAL WITH VALVE BOX

(F) 6" HDPE FABRICATED LATERAL WYE – THREE SEGMENT FOR CLEAN OUT ACCESS

(G) 6" RUBBER FLAPPER SWING CHECK VALVE – FL. X FL. APCO WILLAMETTE OR EQUAL

(H) 6" HDPE MOLDED 45° ELBOW

(I) 6" HDPE CLEAN OUT FITTING WITH END CAP

NOTES:
SUPERINTENDENT SHALL SUBMIT MANUFACTURER'S RECOMMENDATION FOR CONNECTION TO INLET AND OUTLET PIPE

## CONNECTIONS TO OUTFALL DETAIL 3 –

NTS

RECORD DRAWING CERTIFICATE

THESE DRAWINGS REFLECT RECORDED INFORMATION OBTAINED DURING CONSTRUCTION. INFORMATION PROVIDED HEREIN IS ACCURATE TO THE BEST OF MY KNOWLEDGE.

NAME DATE

VILLAGE SAFE WATER

STATE OF ALASKA 49TH TODD B. BETHARD No. CE-10463 REGISTERED PROFESSIONAL ENGINEER

HDR Alaska, Inc.

City of Atka
Water and Sewer Improvements

OLD ATKA VILLAGE OUTFALLS DETAILS

| REVISION | BY | DATE |
|---|---|---|
| ADEC PLAN REVIEW | SJM | 05/07 |

Project No. 28445
Date MAY 2007
Designed SJM
Drawn SJM
Approved TBB

Sheet No. C6.4

SHEET 21 OF 23

C:\PWworking\SEA\jumarcum\d0116251\ATKA-C6.4-6.dwg, 6.4 Outfall Details, 5/24/2007 8:28:16 AM, jumarcum
User: JUMARCUM
Drawing: C:\PWWORKING\SEA\JUMARCUM\D0116251\ATKA-C6.4-6.DWG – Layout: 6.4 OUTFALL DETAILS
Xrefs: 22X34-V.DWG – Images:

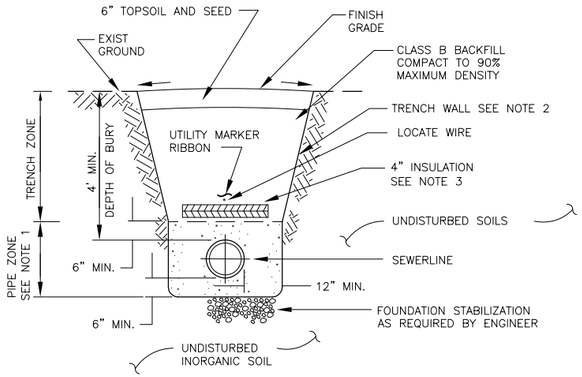


NOTES:

1. PIPE ZONE MATERIAL SHALL BE CLASS A BACKFILL. COMPACT TO 95% MAXIMUM DENSITY.
2. TRENCH WALL SHALL BE SLOPED OR SHORED IN CONFORMANCE WITH ALL APPLICABLE SAFETY STANDARDS.
3. IF DEPTH OF COVER IS LESS THAN 4' MIN, PROVIDE 4" INSULATION AS SHOWN FOR A WIDTH OF 4' CENTERED ON PIPE

## PIPE TRENCH SECTION (A/–)

NTS

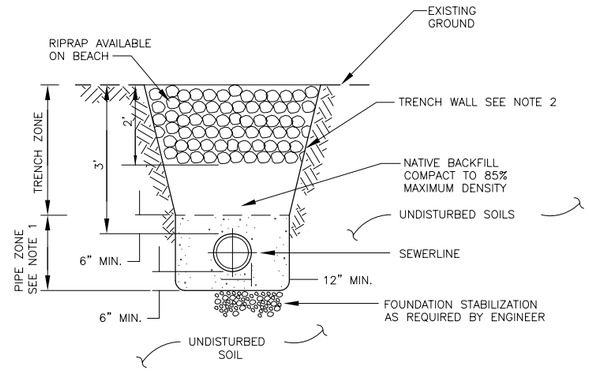


NOTES:

1. PIPE ZONE MATERIAL SHALL BE CLASS A BACKFILL. COMPACT TO 95% MAXIMUM DENSITY.
2. TRENCH WALL SHALL BE SLOPED OR SHORED IN CONFORMANCE WITH ALL APPLICABLE SAFETY STANDARDS.

## PIPE TRENCH SECTION (B/–)

NTS

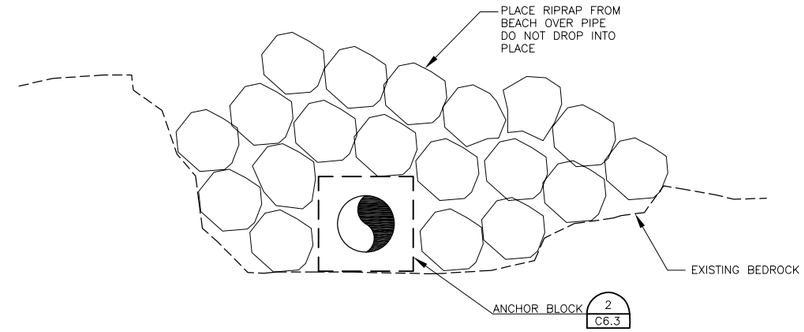


## PIPE TRENCH SECTION (C/–)

NTS

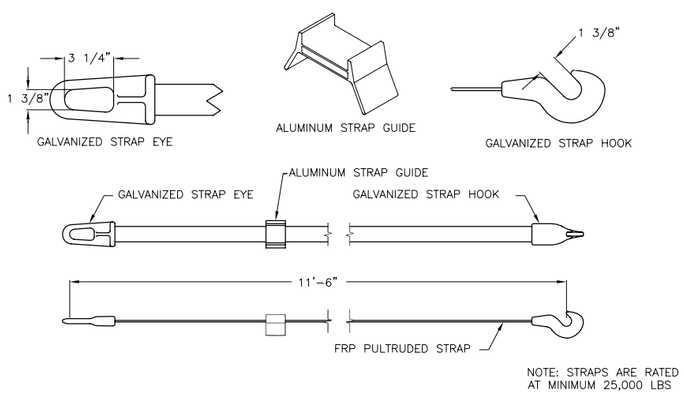


NOTE: STRAPS ARE RATED AT MINIMUM 25,000 LBS

## HOLD-DOWN STRAPS DETAILS (1/–)

NTS

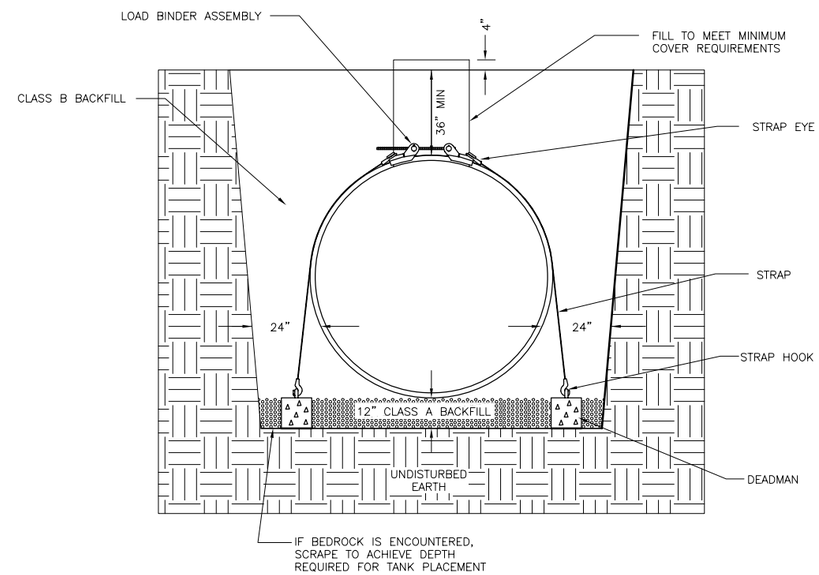


## TANK STRAPS INSTALLATION (2/–)

NTS

RECORD DRAWING CERTIFICATE

THESE DRAWINGS REFLECT RECORDED INFORMATION OBTAINED DURING CONSTRUCTION. INFORMATION PROVIDED HEREIN IS ACCURATE TO THE BEST OF MY KNOWLEDGE.

NAME DATE

VILLAGE SAFE WATER

STATE OF ALASKA 49TH TODD B. BETHARD No. CE-10463 REGISTERED PROFESSIONAL ENGINEER

HDR Alaska, Inc.

City of Atka
Water and Sewer Improvements

OLD ATKA VILLAGE OUTFALLS DETAILS

| REVISION | BY | DATE |
|---|---|---|
| ADEC PLAN REVIEW | SJM | 05/07 |

Project No. 28445
Date MAY 2007
Designed SJM
Drawn SJM
Approved TBB

Sheet No. C6.5
SHEET 22 OF 23

User: JUMARCUM
Plotted on: 5/24/2007 8:28:46 AM, jumarcum
Drawing: C:\PWWORKING\SEA\JUMARCUM\D0116251\ATKA-C6.4-6.DWG - Layout: 6.5 OUTFALL TRENCH SECTIONS AND DETAILS
Xrefs: 22X34-V.DWG - Images:

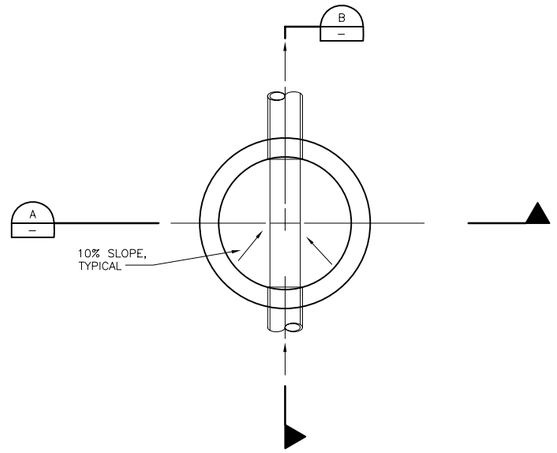


PLAN VIEW OF MANHOLE SHOWING INTERSECTING SEWERS
NTS

NOTES:

1. IN UNIMPROVED NON-TRAFFIC AREAS, TOP OF MANHOLE SHALL BE 24" ABOVE GRADE
2. PIPES SHALL NOT PROTRUDE MORE THAN 3" INSIDE OF MANHOLE SECTION. CONSTRUCT WATER TIGHT CONNECTION TO MANHOLE.
3. MANHOLE SECTION LENGTHS ARRANGED TO FIT DEPTH.
4. SET AND SEAL MANHOLE SECTION JOINTS AS FOLLOWS
   a. ABOVE HIGH GROUNDWATER ELEVATION: MASTIC JOINT COMPOUND
   b. BELOW HIGH GROUNDWATER ELEVATION: PREMOLDED JOINT COMPOUND OR O-RING

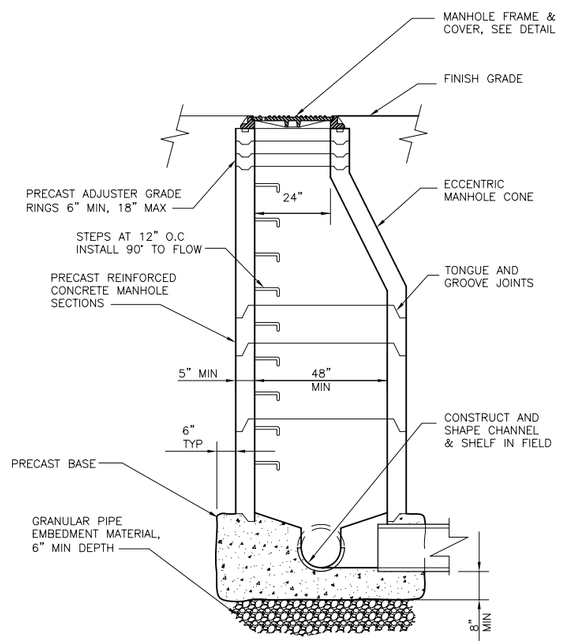


SECTION A
NTS

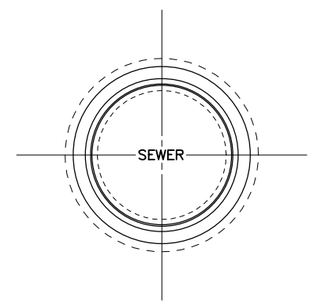


PLAN

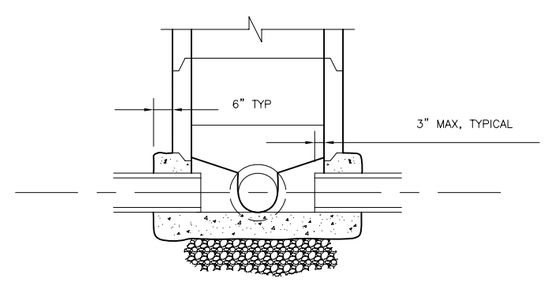


SECTION B
NTS

MANHOLE DETAIL
NTS
1

RECORD DRAWING CERTIFICATE

THESE DRAWINGS REFLECT RECORDED INFORMATION OBTAINED DURING CONSTRUCTION. INFORMATION PROVIDED HEREIN IS ACCURATE TO THE BEST OF MY KNOWLEDGE.

NAME DATE

VILLAGE SAFE WATER

STATE OF ALASKA 49TH TODD B. BETHARD No. CE-10463 REGISTERED PROFESSIONAL ENGINEER

HDR Alaska, Inc.

City of Atka
Water and Sewer Improvements

OLD ATKA VILLAGE OUTFALLS
DETAILS

| REVISION | BY | DATE |
|---|---|---|
| ADEC PLAN REVIEW | SJM | 05/07 |

Project No. 28445
Date MAY 2007
Designed SJM
Drawn SJM
Approved TBB

Sheet No. C6.6
SHEET 23 OF 23

C:\PWworking\SEA\jumarcum\d0116251\ATKA-C6.4-6.dwg, 6.6, 5/24/2007 8:29:16 AM, jumarcum
User: JUMARCUM
Drawing: C:\PWWORKING\SEA\JUMARCUM\D0116251\ATKA-C6.4-6.DWG - Layout: 6.6
Xrefs: 22X34-V.DWG - Images: