ATKA, ALASKA
WATER SYSTEM UPGRADES

- WATER TREATMENT PLANT (WTP)
- BACKWASH WATER DISCHARGE BASIN (2 EA)
- ABANDON THE EXISTING WTP AND WOODSTAVE WATER STORAGE TANKS
- 3,000 LF ± 8" HDPE WATERMAIN UPGRADE
- 2,800 LF ± 6" HDPE WATERMAIN UPGRADE

In Cooperation with the State of Alaska
Department of Environmental Conservation
Village Safe Water Program

ISSUED FOR CONSTRUCTION, MAY 2011

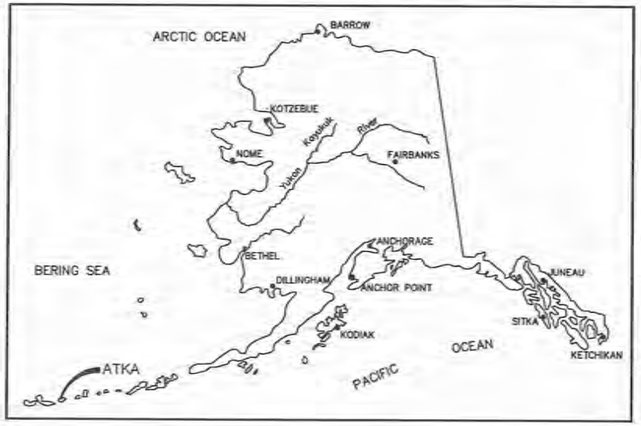

LOCATION MAP

CE2 ENGINEERS, INC.
PO BOX 232946 ANCHORAGE, AK 99523 PH: 907-349-1010 FAX: 907-349-1015

CONSULTANT

RECORD DRAWING CERTIFICATE

THESE DRAWINGS REFLECT RECORDED INFORMATION OBTAINED DURING CONSTRUCTION.
INFORMATION PROVIDED HEREIN IS ACCURATE TO THE BEST OF MY KNOWLEDGE.

NAME DATE

Project Number (Consultant) 610801 (VSW) _____
VSW Project Engineer SUSAN RANDLETT, P.E.
Construction Foreman _____
Final Design (Date) _____
ADEC Approval (Date) _____
Construction Period (From) _____ (To) _____
As-Builts (Date) _____

SHEET INDEX

No.	Title
	GENERAL
	COVER SHEET/INDEX
G1.1	VICINITY MAP AND PROJECT LOCATIONS
G1.2	GENERAL NOTES
G1.3	ABBREVIATIONS, AND CALLOUTS
G1.4	SURVEY CONTROL
G1.5	PROJECT DESIGN AND CRITERIA
G1.6A	EXISTING ELEVATION SCHEMATIC
G1.6B	PROPOSED ELEVATION SCHEMATIC
G1.7	GEOTECHNICAL TEST PIT LOCATIONS
G1.8 - G1.13	GEOTECHNICAL INFORMATION
G2.0	SITE CONTROL
	CIVIL
C1.0	SITE PLAN - WATER TREATMENT SITE
C1.1	SECTIONS - WATER TREATMENT SITE
C2.0	WATERMAIN IMPROVEMENTS - INDEX SHEET
C2.1	PLAN AND PROFILE
C2.2	PLAN AND PROFILE
C2.3	PLAN AND PROFILE
C2.4	PLAN AND PROFILE
C2.5	PLAN AND PROFILE
C2.6	PLAN AND PROFILE
C2.7	PLAN AND PROFILE
C2.8	PLAN AND PROFILE
C2.9	PLAN AND PROFILE
C2.10	PLAN AND PROFILE
C2.11	PLAN AND PROFILE
C5.1	TRENCH SECTION AND PIPE DETAILS
C5.2	LAGOON DRAIN DETAILS WATER TREATMENT SITE
C5.3	FENCE DETAILS
C5.4	ON-SITE WASTE WATER DISPOSAL
	ARCHITECTURAL
A1.1	WTP ELEVATIONS AND FLOORPLAN
A1.2	ROOM SCHEDULES
A1.3	LABORATORY AND RESTROOM CEILING DETAIL
	STRUCTURAL
S1.0	GENERAL STRUCTURAL NOTES
S2.0	WTP PLANS AND SECTIONS
S3.0	WTP DETAILS
	MECHANICAL
M1.0	WATER TREATMENT PROCESS DIAGRAM OPERATIONAL NARRATIVE
M1.1	WATER TREATMENT PROCESS DIAGRAM
M2.0	WATER TREATMENT PLANT MECHANICAL FLOOR PLAN
M2.1	WATER SUPPLY PROCESS DIAGRAM
M2.2	PRESSURE FILTER ISOMETRIC
M2.3	TANK FILL AND DRAW PROCESS SCHEMATIC
M2.4	PRESSURE FILTER DETAILS AND SECTIONS
M2.5	DRAIN, WASTE AND VENT
M2.6	PIPE SUPPORT DETAILS
M2.7	CHLORINATION ROOM AND DETAILS
M2.8	TURBIDIMETER ARRANGEMENT
M2.9	INSTRUMENTATION AND COAGULATION FEED PUMP DIAGRAM
M3.1	PUMP CURVES
M4.1	HVAC AND PLUMBING PLAN
M4.2	HVAC AND PLUMBING DETAILS
M4.3	PLUMBING DETAILS
M5.1	EQUIPMENT LIST
M5.2	EQUIPMENT LIST
M5.3	EQUIPMENT LIST
	ELECTRICAL
E1.0	ELECTRICAL LEGEND AND SCHEDULES
E2.0	ELECTRICAL PLANS
E3.1	ELECTRICAL DIAGRAMS AND DETAILS
E3.2	ELECTRICAL DIAGRAMS AND DETAILS

G:\ACAD\ATKA\2009 Water System Upgrades\COVER.dwg, 5/3/2011 2:15:32 PM, Flash, LANIER MP C2050_LD520C PCL 6BLK WHITE.pc3

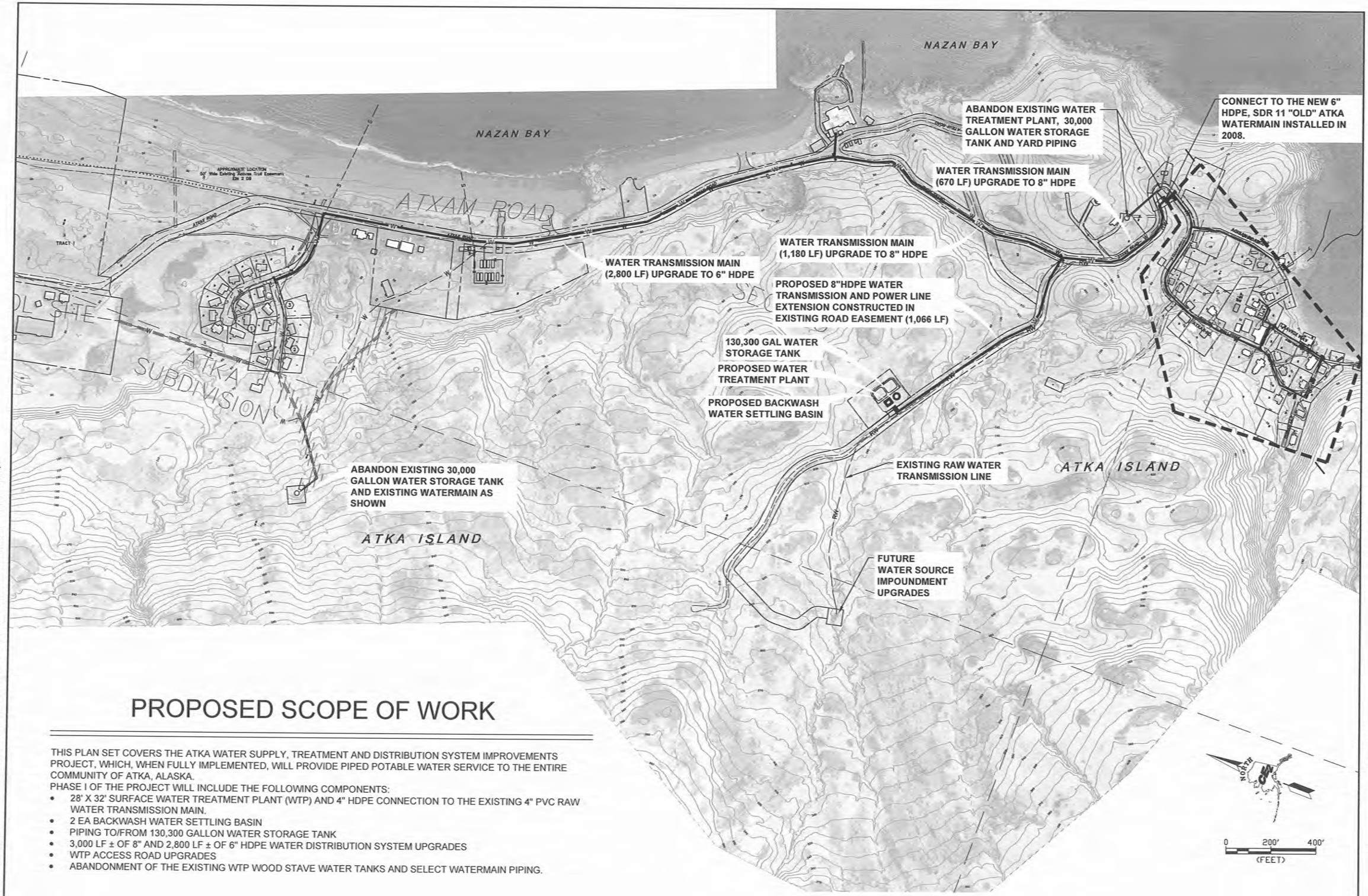

PROPOSED SCOPE OF WORK

THIS PLAN SET COVERS THE ATKA WATER SUPPLY, TREATMENT AND DISTRIBUTION SYSTEM IMPROVEMENTS PROJECT, WHICH, WHEN FULLY IMPLEMENTED, WILL PROVIDE PIPED POTABLE WATER SERVICE TO THE ENTIRE COMMUNITY OF ATKA, ALASKA.

PHASE I OF THE PROJECT WILL INCLUDE THE FOLLOWING COMPONENTS:

- 28' X 32' SURFACE WATER TREATMENT PLANT (WTP) AND 4" HDPE CONNECTION TO THE EXISTING 4" PVC RAW WATER TRANSMISSION MAIN.
- 2 EA BACKWASH WATER SETTLING BASIN
- PIPING TO/FROM 130,300 GALLON WATER STORAGE TANK
- 3,000 LF ± OF 8" AND 2,800 LF ± OF 6" HDPE WATER DISTRIBUTION SYSTEM UPGRADES
- WTP ACCESS ROAD UPGRADES
- ABANDONMENT OF THE EXISTING WTP WOOD STAVE WATER TANKS AND SELECT WATERMAIN PIPING.

RECORD DRAWING CERTIFICATE
THESE DRAWINGS REFLECT RECORDED INFORMATION OBTAINED DURING CONSTRUCTION. INFORMATION PROVIDED HEREIN IS ACCURATE TO THE BEST OF MY KNOWLEDGE.
NAME
DATE

SCALE:
BAR IS ONE INCH ON ORIGINAL DRAWING
IF NOT ONE INCH ON THIS SHEET ADJUST SCALES ACCORDINGLY

CONSTRUCTION RECORD
FIELD BOOK
STAKING
FOREMAN
AS-BUILT
INSPECTOR

REVISION | BY | DATE

2009 WATER SYSTEM UPGRADES

VICINITY MAP AND PROJECT LOCATIONS.

ATKA, ALASKA

CE2 ENGINEERS, INC.
PO BOX 223944 ANCHORAGE, AK 99523 PH: 907-349-1010 FAX: 907-349-1015

Project No.
Date MAY 2010
Designed LAP
Drawn LAW
Approved LAP

Sheet No.
G1.1

G:\CAD\ATKA\2009 Water System Upgrades\G1.1 Vicinity Map.dwg, 2/16/2011 10:04:24 AM, Flash, LANIER MP C2050_LD520C PCL 6BLK WHIT.pc3

GENERAL NOTES

1. ALL CONSTRUCTION SHALL BE DONE IN A SAFE WORKMANLIKE MANNER TO INDUSTRY STANDARDS AND IN CONFORMANCE WITH APPLICABLE LOCAL, STATE, AND FEDERAL CODES AND REGULATIONS.

2. MATERIALS
   A. WATERMAIN - 4 INCH, 6 INCH OR 8 INCH HDPE, SDR 11 CARRIER PIPE WITH BUTT FUSED JOINTS.
   B. YARD PIPING - 6, 8 AND 10 INCH HDPE, SDR 11 CARRIER PIPE WITH BUTT FUSED JOINTS.
   C. MECHANICAL ROOM PROCESS PIPING -SCH 80 PVC UNLESS OTHERWISE NOTED

3. THE BASIS OF VERTICAL CONTROL SHALL BE AS SHOWN ON SHEET G1.4

4. THE BASIS OF HORIZONTAL CONTROL SHALL BE AS SHOWN ON SHEET G1.4

5. EXISTING UTILITIES ARE SHOWN IN APPROXIMATE LOCATION TO THE BEST KNOWLEDGE OF THE ENGINEER AT THE TIME OF DESIGN. UTILITY RECORDS MAY NOT BE COMPLETELY ACCURATE. THE PROJECT SUPERINTENDENT SHALL VERIFY HORIZONTAL AND VERTICAL LOCATION OF UTILITIES WITHIN EACH CONSTRUCTION REACH PRIOR TO CONSTRUCTION. ALL UTILITIES ARE BURIED UNLESS OTHERWISE NOTED.

6. THE PROJECT SUPERINTENDENT SHALL BE RESPONSIBLE FOR MAINTAINING A CLEAN SET OF AS-BUILT "RED LINE" RECORD DRAWINGS SHOWING LOCATION AND SWING TIES TO ALL MANHOLES, CLEANOUTS, VALVES, BENDS, HEAT TRACE END SEALS, AND SERVICE LINE TAPS. ALL ELEVATIONS SHALL BE MARKED ASB (AS-BUILT) OR F.C. (FIELD CHANGED) WITH THE CORRECT VALUE INSERTED. DRAWINGS SHALL BE KEPT CURRENT IN RED PENCIL AND UPDATED DAILY IN A NEAT AND LEGIBLE FASHION. A COPY OF THE AS-BUILT DRAWINGS SHALL BE SUBMITTED TO THE ENGINEER FOR PREPARATION OF PROJECT "RECORD DRAWINGS".

7. HORIZONTAL SEPARATION DISTANCE BETWEEN WATER AND SEWER MAINS SHALL BE TEN (10) FEET MINIMUM, AS MEASURED BETWEEN THE OUTSIDE OF THE CARRIER PIPES, UNLESS OTHERWISE NOTED. VERTICAL SEPARATION DISTANCE BETWEEN WATERMAINS AND SEWER MAINS, STORM DRAINS AND SERVICE LINES SHALL BE EIGHTEEN (18) INCHES MINIMUM. WHERE WATERMAINS CROSS SEWER MAINS OR STORM DRAINS, THE PROJECT SUPERINTENDENT SHALL STAGGER THE JOINTS FOR THE WATER PIPE SUCH THAT NO JOINT SHALL BE CLOSER THAN NINE (9) FEET FROM THE CENTERLINE CROSSING OF THE LINES. IT SHALL BE THE PROJECT SUPERINTENDENT'S RESPONSIBILITY TO MAINTAIN THESE SEPARATION DISTANCES AND TO NOTIFY THE ENGINEER IF EXTRAORDINARY MEASURES WILL BE REQUIRED TO ACHIEVE THE REQUIRED MINIMUM SEPARATION.

8. SEWER MANHOLE TOP-OF-CASTING ELEVATIONS SHALL BE SET SIX (6) INCHES BELOW FINAL GRADE IN ALL UNPAVED ROADS. SEWER MANHOLE TOP-OF-CASTING ELEVATIONS SHALL BE SET SIX (6) INCHES ABOVE FINISHED GRADE IN ALL UNDEVELOPED, UNTRAVELED AREAS.

9. EXISTING UTILITIES (WATER, SEWER, STORM, ECT.) THAT CONFLICT WITH THE PROPOSED PIPING SHALL BE REMOVED. ANY EXISTING UTILITIES TO BE ABANDONED IN PLACE SHALL HAVE OPEN END(S) PLUGGED WITH CEMENT GROUT PRIOR TO CLOSURE OF THE DITCH. THE UPPER 3-FEET OF ALL MANHOLES TO BE ABANDONED IN PLACE SHALL BE REMOVED; TWO 6-INCH DIAMETER DRAIN HOLE PENETRATIONS INSTALLED NEAR THE BASE AND THE BARREL SECTION AND BACKFILLED WITH PIT RUN MATERIAL PLACED IN 12-INCH LIFTS AND COMPACTED TO 95% OF THE MATERIALS RELATIVE DENSITY.

ELECTRICAL:	CITY OF ATKA	(907) 839-2233
SEWER AND WATER	CITY OF ATKA	(907) 839-2233
TELEPHONE:	AT&T ALASCOM	(800) 252-7266
TELEVISION:	ATXAM VILLAGE CORP.	(907) 839-2237
GAS:	N/A	

10. GENERAL RESTORATION - THE AREAS IMPACTED BY CONSTRUCTION SHALL BE RETURNED TO PRECONSTRUCTION CONDITIONS OR BETTER. CONSTRUCTION DEBRIS SHALL BE REMOVED FROM THE AREA AND DISPOSED OF IN AN APPROVED MANNER. DUE CARE AND CAUTION SHALL BE TAKEN TO AVOID DISTURBING PERSONAL PROPERTY.

11. THE ENTIRE EXCAVATION SITE SHALL BE ADEQUATELY PROTECTED, RESTRICTED, AND BARRICADED IN THE BEST PUBLIC INTERESTS OF HEALTH, SAFETY, AND WELFARE WITH VISIBLE AND STABLE BARRIERS, FLASHING YELLOW WARNING LIGHTS IN GOOD WORKING ORDER, UNDERSTANDABLE, LARGE-PRINT WARNING SIGNS, AND OTHER PRECAUTIONARY EQUIPMENT AND MEASURES AS THE CITY MAY REQUIRE. ALL SAFETY MEASURES SHALL BE IN CONFORMANCE WITH APPLICABLE STATE OF ALASKA DOT AND OSHA SAFETY REQUIREMENTS.

12. EARTHWORK
   A. SAFETY CONSIDERATIONS - SIDEWALLS OF TRENCHES AND EXCAVATIONS SHALL BE SLOPED OR SUFFICIENTLY BRACED IN CONFORMANCE WITH SECTION 05.160 OF THE STATE OF ALASKA DEPARTMENT OF LABOR STANDARDS AND THE LATEST FEDERAL OSHA EXCAVATION AND TRENCHING STANDARDS TO PROVIDE A SAFE WORKING ENVIRONMENT. ALL TRENCHES SHALL BE BACKFILLED BEFORE WORK IS STOPPED FOR THE DAY. IF IT BECOMES NECESSARY TO LEAVE A PORTION OF THE EXCAVATION OPEN AND UNATTENDED, THE OPEN EXCAVATIONS SHALL BE ADEQUATELY SIGNED AND BARRICADED TO WARN RESIDENTS OF THE HAZARD.
   B. COMPACTION - COMPACTION SHALL TYPICALLY BE ACCOMPLISHED BY USE OF A MECHANICAL DEVICE SUCH AS A VIBRATORY PLATE COMPACTOR OR SELF-PROPELLED VIBRATORY DRUM COMPACTOR. TRENCH ZONE BACKFILL ABOVE THE PIPE ZONE AND WITHIN ROADS OR OTHER TRAVELED WAYS SHALL BE COMPACTED IN 8 INCH MAXIMUM LIFTS TO THE DENSITY AS SHOWN ELSEWHERE IN THESE PLANS.
   C. BACKFILL MATERIAL - MATERIAL WITHIN 6 INCHES OF THE PIPE SHALL BE 2" MINUS GRANULAR, COMPACTIBLE PIT RUN MATERIAL AND SHALL CONTAIN NO FROZEN OR ORGANIC MATERIAL. EXCEPT FOR THE MAXIMUM PARTICLE SIZE, THE REMAINING BACKFILL MATERIAL SHALL BE SIMILARLY RESTRICTED, AND AS SHOWN IN THE PLANS.

13. SITE PREPARATION
   A. ALL FILL PLACED BELOW FOOTINGS SHALL BE NON-FROST SUSCEPTIBLE GRANULAR MATERIAL FREE OF ORGANIC MATTER AND DEBRIS PLACED IN LIFTS NOT EXCEEDING 12" IN LOOSE THICKNESS AND COMPACTED TO 95% OF MAXIMUM DENSITY IN ACCORDANCE WITH ASTM D-1557-5". ALL ORGANIC MATERIAL, FROZEN SOIL, LOOSE FILL, DEBRIS, AND REMNANTS OF PREVIOUS IMPROVEMENTS (FOUNDATIONS, SEPTIC TANKS, ETC.) SHALL BE REMOVED FROM THE WORK SITE PRIOR TO PLACING ANY STRUCTURAL FILL, MATS, SLABS OR FOOTINGS.
   B. SOIL CONDITIONS AT THIS SITE CONSIST OF A LAYER OF SURFACE ORGANICS AND SILT OVER SILTY GRAVELS. SURFACE ORGANICS AND SILTS ARE TO BE REMOVED AND REPLACED (IF NECESSARY) WITH COMPACTED GRAVEL.
   C. BASED ON DUANE MILLER ASSOCIATES INVESTIGATION, A SOIL BEARING PRESSURE OF 2500 PSF WAS USED FOR DESIGN PURPOSES. IF SOIL CONDITION OTHER THAN THOSE REPORTED ARE ENCOUNTERED, CONTACT THE STRUCTURAL ENGINEER FOR EVALUATION.

   UTILIZE A MINIMUM OF THREE PASSES OF A VIBRATORY PLATE COMPACTOR FOR BEST COMPACTION EFFORT. FOUNDATION FILL SHALL BE TESTED BY CONE PENETROMETER TO VERIFY COMPACTION CONSISTENCY.

14. CONCRETE
   A. CODE - CONCRETE WORK AND REINFORCEMENT SHALL CONFORM TO THE INTERNATIONAL BUILDING CODE (IBC) 2006 EDITION AND TO ALL REQUIREMENTS OF THE AMERICAN CONCRETE INSTITUTE (ACI) 318-95, SPECIFICATIONS FOR STRUCTURAL CONCRETE FOR BUILDINGS, EXCEPT AS MODIFIED BY THE FOLLOWING SUPPLEMENTAL REQUIREMENTS.
   THE IBC SHALL GOVERN IN ALL MATTERS PERTAINING TO CONCRETE WORK WHENEVER THE IBC IS IN CONFLICT WITH THE REQUIREMENTS OF OF ACI 318-95.
   B. CEMENT - ASTM C150, TYPE 3, HIGH EARLY STRENGTH.
   C. AGGREGATE - SHALL MEET THE REQUIREMENTS OF ASTM C33.
   D. CONCRETE STRENGTH - 28-DAY, 3,000 PSI COMPRESSIVE STRENGTH
   E. MAXIMUM AGGREGATE SIZE: 1-1/2"
   F. SLUMP: 2" TO 4"
   G. AIR ENTRAINMENT: 6% (±1%)
   H. MIX DESIGN - MIX DESIGN IS REQUIRED UNLESS OTHERWISE APPROVED.
   I. TESTING - TWO CONCRETE TEST CYLINDERS SHALL BE TAKEN DURING EACH CONCRETE POUR. CONCRETE STRENGTHS SHALL BE VERIFIED BY STANDARD 7 DAY AND 28 DAY CYLINDER TESTS UNLESS OTHERWISE APPROVED. PERFORM SLUMP WHENEVER CYLINDERS ARE TAKEN.
   J. REINFORCING STEEL - ASTM A615 GRADE 60
   K. REINFORCING STEEL COVER - (UNLESS OTHERWISE NOTED)

USE OF STEEL REINFORCEMENT	MINIMUM COVER REQUIRED (INCHES)
SLAB BARS	1-1/2"
FOOTINGS AND SLAB BARS CAST ON GROUND	3"

   L. CHAMFERS - EXCEPT AS OTHERWISE REQUIRED, EXPOSED CONCRETE CORNERS AND EDGES SHALL HAVE 3/4" CHAMFERS. RE-ENTRANT CORNERS SHALL NOT HAVE FILLETS UNLESS OTHERWISE SHOWN.

15. STEEL
   STEEL WORK SHALL BE PREFORMED AS DESCRIBED IN CHAPTER 22 OF THE INTERNATIONAL BUILDING CODE.
   A) STEEL SHALL BE OF THE GRADE NOTED BELOW:
      1) STRUCTURAL STEEL IS ASTM A36
      2) STEEL TUBE IS ASTM A500, GRADE B
   B) BOLTS NOTED AS A.B. (ANCHOR BOLTS) AND M.B. (MACHINE BOLTS) SHALL CONFORM TO ASTM A307. HIGH STRENGTH BOLTS NOTED AS A325 AND A490 SHALL CONFORM TO DIVISION IV OF THE UBC CHAPTER 22.
   C) WELDING SHALL CONFORM TO AWS D1.1-96. WELDS SHALL BE 3/16" MINIMUM UNLESS NOTED OTHERWISE. ELECTRODES SHALL BE AWS E70
   D) METAL STUDS, JOISTS AND ACCESSORIES SHALL BE FORMED FROM GALVANIZED STEEL MEETING THE MINIMUM REQUIREMENTS OF ASTM A445 GRADE (Fy=50KSI) FOR 12, 14, AND 16 GAUGE, AND ASTM A446 GRADE A (Fy=33KSI) FOR 18 GAUGE AND LIGHTER. GALVANIZED COATINGS MUST MEET THE ASTM A525 SPECIFICATION.
   E) ALL SECTION PROPERTIES SHALL BE BASED ON AMERICAN IRON AND STEEL INSTITUTE (AISI) "SPECIFICATIONS FOR THE DESIGN OF COLD-FORMED STEEL STRUCTURAL MEMBERS".

16. PRESSURE TESTING:
   A. ALL TESTS SHALL BE WITNESSED BY A REPRESENTATIVE DESIGNATED BY THE OWNER (CITY OF ATKA). UPON SUCCESSFUL COMPLETION OF A TEST THE RESULTS OF THE TEST SHALL BE DOCUMENTED ON A TEST FORM AND ACKNOWLEDGED BY SIGNATURE OF THE OWNER'S REPRESENTATIVE WITNESSING THE TEST AND BY THE CONTRACTOR. THE CONTRACTOR'S RED LINED AS-BUILT DRAWINGS AND DAILY FIELD REPORT SHALL ALSO NOTE, FOR EACH SEGMENT OF THE SYSTEM TESTED, THE TIME AND DATE OF THE TEST AND THE NAME OF THE OWNER'S WITNESS.
   B. WATERMAIN TESTING - PERFORM HYDROSTATIC TESTING OF WATERMAINS. HYDROSTATIC TESTS SHALL BE PERFORMED AFTER OPEN BORE FLUSHING AND BEFORE DISINFECTION (SEE ITEM 17 BELOW). FILL THE LINE WITH WATER AND REMOVE AIR PRIOR TO STARTING THE TEST. PRESSURIZE TO 1.5 X OPERATING PRESSURE (80 PSI) = 120 PSI AND LEAVE FOR A MINIMUM OF 1-HOUR. AFTER THIS INITIAL PERIOD, ADD WATER TO BRING THE PRESSURE UP TO 120 PSI AND BEGIN A 1-HOUR TEST. FOR THE WATERLINE TO BE ACCEPTED THE MAKE-UP WATER REQUIRED TO RETURN THE PRESSURE TO 120 PSI AT THE END OF THE TEST PERIOD SHALL NOT BE GREATER THAN 0.4 GALLONS PER 100 FEET OF 6" WATERMAIN OR 0.5 GALLONS PER 100 FEET OF 8" WATERMAIN, PLUS 0.1 GALLONS PER 80 FEET OF CIRCULATING WATER SERVICE LINE.

17. DISINFECTION PROCEDURES:

   A. WATER LINE DISINFECTING - ALL WATER DISTRIBUTION LINES SHALL BE DISINFECTED IN ACCORDANCE WITH THE REQUIREMENTS OF THE LATEST EDITION OF AWWA C651. THE METHOD OF CHLORINATION SHALL BE WITH THE SLUG METHOD, AS DESCRIBED IN SECTION 5.3 OF THE STANDARD. AFTER DISINFECTION, THE WATER DISTRIBUTION LINES SHALL BE FLUSHED IN ACCORDANCE WITH THE REQUIREMENTS OF SECTION 6. HEAVILY CHLORINATED WATER SHALL BE NEUTRALIZED WITH A SOLUTION OF SODIUM BISULFITE OR SODIUM SULFITE AT A RATE TABULATED IN APPENDIX B OF THE STANDARD. THE SUPERINTENDENT IN CHARGE OF THE DISINFECTION AND FLUSHING OF THE LINES SHALL HAVE A COPY OF AWWA C651 ON SITE FOR READY REFERENCE.

   B. WATER TREATMENT PLANT DISINFECTING — ALL PIPING IN THE WATER TREATMENT PLANT SHALL BE DISINFECTED IN ACCORDANCE WITH THE REQUIREMENTS OF THE LATEST EDITION OF AWWA C651 USING THE SLUG METHOD AS DESCRIBED IN SECTION 5.3 OF THE STANDARD. FILTERS FL-1 AND FL-2 SHALL BE DISINFECTED IN ACCORDANCE WITH THE LATEST EDITION AWWA C653 USING THE DISINFECTION METHOD DESCRIBED IN SECTION 5.2. THE SUPERINTENDENT SHALL HAVE A COPY OF AWWA C653 ON SITE FOR READY REFERENCE.

18. STORMWATER MANAGEMENT
   A. CONSTRUCTION SHALL BE PLANNED AND EXECUTED TO EXPEDITIOUSLY COMPLETE THE PROJECT WHILE MAINTAINING THE CONSTRUCTION SITE IN A MANNER THAT REDUCES THE POTENTIAL FOR CONTAMINATED STORM RUNOFF. SPECIFIC STEPS ARE TO INCLUDE THE FOLLOWING:
   - PRIOR TO CONSTRUCTION DEVELOP A STORM WATER POLLUTION PREVENTION PLAN (SWPPP) WHICH UTILIZES THE BEST MANAGEMENT PRACTICES (BMPS) AND IS IN COMPLIANCE WITH THE NATIONAL POLLUTANT DISCHARGE ELIMINATION SYSTEM (NPDES) AND THE ALASKA CONSTRUCTION GENERAL PERMIT NO. AKR100000.
   - FILE A NOTICE OF INTENT (NOI) WITH THE STATE OF ALASKA A MINIMUM OF 7-DAYS PRIOR TO THE START OF CONSTRUCTION.
   - CONSTRUCTOR SHALL BE VIGILANT WITH IMPLEMENTATION OF THE PLAN.
   - INSPECTIONS SHALL BE COMPLETED BY AN ALASKA CESCL (CERTIFIED EROSION AND SEDIMENT CONTROL LEAD) IF POSSIBLE.
   - A NOTICE OF TERMINATION MUST BE FILED WITH THE STATE OF ALASKA WITHIN 30-DAYS OF REMOVAL OF TEMPORARY CONTROL DEVICES.
   - ALL RECORDS MUST BE KEPT FOR AT LEAST 3-YEARS.

19. CONSTRUCTION QUALITY
   IT IS ASSUMED THAT CONSTRUCTION WILL BE PERFORMED BY SEMI-TRAINED OR IN-TRAINING CONSTRUCTION PERSONNEL. THEREFORE, ADHERENCE TO CONSTRUCTION PROCEDURES THAT ASSURE EVERY COMPONENT IS IN COMPLIANCE WITH QUALITY EXPECTATIONS IS REQUIRED. THE FOLLOWING MEASURES AND TOOLS MUST BE USED BY THE CONSTRUCTION SUPERVISORS, PERSONNEL AND INSPECTORS AS APPROPRIATE:

   - PLANS AND OUTLINE SPECIFICATIONS - MINIMUM REQUIRED CONSTRUCTION QUALITY REQUIREMENTS ARE PRESENTED HEREIN. IT IS ASSUMED THAT INDUSTRY STANDARD PRACTICES, CONSTRUCTION TECHNIQUES, AND LEVEL OF QUALITY SHALL BE MAINTAINED IN THE COURSE OF MEETING THESE REQUIREMENTS.
   - PROJECT SPECIFIC QUALITY ASSURANCE AND QUALITY CONTROL (QAQC) PLAN - ANY SUPPLEMENTAL QAQC PLAN SPECIFIC FOR THIS PROJECT SHOULD BE FOLLOWED PROVIDED THAT IT EXCEEDS THE MINIMUM REQUIREMENTS PROVIDED HEREIN AND IS APPROVED BY THE OWNER/CONTRACTING AGENCY.
   - INSPECTIONS AND REQUIRED CERTIFICATIONS - ANY CRITICAL OPERATION OR SPECIALTY TRADES (I.E., HDPE THERMAL BUTT FUSION PROCEDURE, CONSTRUCTION SURVEYING, ETC.) SHALL BE PERFORMED BY TRAINED PERSONNEL. QUALITY ASSURANCE INSPECTIONS AT REGULAR INTERVALS ARE ALSO ENCOURAGED.
   - QUALITY IS EVERYBODY'S RESPONSIBILITY - EVERY PROJECT CREW MEMBER IS RESPONSIBLE FOR THEIR OWN WORK. THEY SHOULD MAINTAIN THE HIGHEST QUALITY OF WORK STANDARDS POSSIBLE AND SHOULD BE WILLING TO SIGN EVERY COMPONENT INSTALLED.

RECORD DRAWING CERTIFICATE
THESE DRAWINGS REFLECT RECORDED INFORMATION OBTAINED DURING CONSTRUCTION. INFORMATION PROVIDED HEREIN IS ACCURATE TO THE BEST OF MY KNOWLEDGE.
NAME _____ DATE _____

SCALE:

CONSTRUCTION RECORD
FIELD BOOK
STAKING
FOREMAN
AS-BUILT
INSPECTOR

2009 WATER SYSTEM UPGRADES
GENERAL NOTES
ATKA, ALASKA

CE2 ENGINEERS, INC.
PO BOX 220568 ANCHORAGE, AK 99522 PH: 907-349-1010 FAX: 907-349-1015

REVISION	BY	DATE

Project No. ____ Date MAY 2010
Designed LAP
Drawn DDR
Approved LAP

Sheet No. G1.2

G:\ACAD\ATKA\2009 Water System Upgrades\G1.2 General Notes.dwg, 5/4/2011 9:15:33 AM, lpenson, \\CE2MAIN\LANIER MP C2050/LD520C PCL 6

LEGEND

EXISTING PLAN VIEW	EXISTING PROFILE VIEW	PROPOSED PLAN VIEW	PROPOSED PROFILE VIEW	DESCRIPTION
				GROUND SURFACE
				CREEK / DRAINAGE
W		W		WATERMAIN, GATE VALVE, HYDRANT (HYDRANT NOT SHOWN IN PROFILE VIEW)
				CULVERT
E E E E				BURIED ELECTRICAL LINE
FO FO FO FO				BURIED FUEL OIL LINE
T T T T				BURIED TELEPHONE LINE
OHE OHE				OVERHEAD ELECTRIC
				EASEMENT
U				UTILIDOR
FM				FORCE MAIN
				UTILITY POLE (EXISTING LOCATION)
				UTILITY POLE (PROPOSED LOCATION)
				FENCE
				PROPOSED OR FUTURE GRAVEL TRAVELED WAY
24				CONTOUR LINE
				R.O.W. (RIGHT- OF- WAY)
				SHORELINE
				TREES AND/OR BRUSH
MAJOR MINOR				STRUCTURE
				NATURAL GROUND OR COMPACTED SOIL
				DIRECTION OF DRAINAGE
				PROPERTY LINE
				SECTION LINE
				ABANDONED VEHICLE
				BENCH MARK
24.5				SPOT ELEVATION
#1012				REBAR - ABILITY SURVEY POINT NO.
				YELLOW PLASTIC CAP (REBAR)
TRACT 3				TRACT NUMBER
LOT 8				LOT NUMBER
				TELEPHONE PEDESTAL
				HEAT TRACE ACCESS VAULT
				HEAT TRACE POWER SUPPLY
WS/SS		WS		WATER SERVICE CONNECTION (1 INCH DIAMETER UNLESS OTHERWISE INDICATED) TO THE WATERMAIN. FINAL LOCATION TO BE DETERMINED IN THE FIELD AFTER COORDINATION WITH THE PROPERTY OWNER
WS/SS ABND				EXISTING WATER AND SEWER SERVICE LINE TO BE REMOVED FROM THE PUBLIC RIGHT-OF-WAY AND DISPOSED OF IN AN APPROVED MANNER.

SECTION AND DETAIL DESIGNATIONS

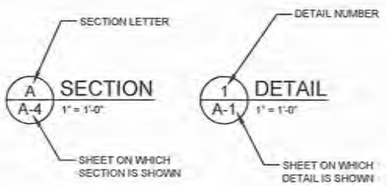

ABBREVIATIONS

AASHTO	AMERICAN ASSOCIATION OF STATE HIGHWAY AND TRANSPORTATION OFFICIALS	N	NORTH
		NA	NOT APPLICABLE
APPROX	APPROXIMATE	NOM	NOMINAL
ASTM	AMERICAN SOCIETY FOR TESTING AND MATERIALS	NTS	NOT TO SCALE
		OC	ON CENTER
BH	BORE HOLE	OD	OUTSIDE DIAMETER
BLDG	BUILDING		
BM	BENCH MARK	PC	POINT OF CURVE
BVC	BEGIN VERTICAL CURVE	PERF	PERFORATED
		PI	POINT OF INTERSECTION
CAV	COMBINATION AIR RELEASE/ VACUUM RELIEF		PLATE OR PROPERTY LINE
		PPCD	POUNDS PER CAPITA PER DAY
CL	CENTERLINE	PPM	PARTS PER MILLION
C/L	CLEARING LIMIT	PRV	PRESSURE REDUCING VAULT
CC	CENTER TO CENTER	PSF	POUND PER SQUARE FOOT
CFS	CUBIC FEET PER SECOND	PSI	POUND PER SQUARE INCH
CMP	CORRUGATED METAL PIPE	PT	POINT OF TANGENT
CTRS	CENTERS	PVC	POINT OF VERTICAL CURVE OR POLYVINYL CHLORIDE
CU	COPPER	PVI	POINT OF VERTICAL INTERSECTION
CY	CUBIC YARD	PVT	POINT OF VERTICAL TANGENT
DET	DETAIL	QTY	QUANTITY
DI	DUCTILE IRON		
DIA	DIAMETER	R	RADIUS
DL	DEADLOAD	REF	REFERENCE
DWG	DRAWING	REINF	REINFORCEMENT
		REQD	REQUIRED
EA	EACH	RW	RAW WATER
EVC	END VERTICAL CURVE	R/W	RIGHT-OF-WAY
EL	ELEVATION		
EXIST	EXISTING	S	SOUTH, SLOPE
		SCH	SCHEDULE
FDN	FOUNDATION	SECT	SECTION
FF	FINISH FLOOR	SHT	SHEET
FG	FINISH GRADE	SIM	SIMILAR
FPS	FEET PER SECOND	SS	STAINLESS STEEL OR SANITARY SEWER
FT	FOOT OR FEET		
FTG	FOOTING	STA	STATION
		STD	STANDARD
GA	GAGE	STL	STEEL
GALV	GALVANIZED		
GS	GROUND	TW	TREATED WATER
GND	GROUND	TYP	TYPICAL
GPD	GALLONS PER DAY	TP	TEST PIT
GPM	GALLONS PER MINUTE		
		UG	UNDERGROUND
HDPE	HIGH DENSITY POLYETHYLENE	USGS	UNITED STATES GEOLOGICAL SURVEY
HOR	HORIZONTAL		
HPM	HIGHWAY PRECONSTRUCTION MANUAL	VC	VERTICAL CURVE
		VER	VERTICAL
IE	INVERT ELEVATION	VPI	VERTICAL POINT OF INTERSECTION
ID	INSIDE DIAMETER		
IN	INCH OR INCHES	W	WITH
IP	IRON PIPE	W/O	WITHOUT
		WS	WATER SURFACE
LB	POUND	WT	WEIGHT
LBS	POUNDS	WWF	WELDED WIRE FABRIC
LF	LINEAR FEET		
LL	LIVE LOAD	XS	EXTRA STRONG
		YD	YARD
MAX	MAXIMUM		
MGAL	MILLION GALLONS		
MG/L	MILLIGRAMS PER LITER		
MIN	MINIMUM OR MINUTE		
MISC	MISCELLANEOUS		
MPH	MILES PER HOUR		

RECORD DRAWING CERTIFICATE
THESE DRAWINGS REFLECT RECORDED INFORMATION OBTAINED DURING CONSTRUCTION. INFORMATION PROVIDED HEREIN IS ACCURATE TO THE BEST OF MY KNOWLEDGE.
NAME DATE

SCALE:
IF NOT ONE INCH ON THIS SHEET ADJUST SCALES ACCORDINGLY

CONSTRUCTION RECORD
FIELD BOOK
STAKING
FOREMAN
AS-BUILT
INSPECTOR

STATE OF ALASKA 49TH REGISTERED ENGINEER

2009 WATER SYSTEM UPGRADES
ABBREVEATIONS AND CALLOUTS
ATKA, ALASKA

CE2 ENGINEERS, INC.
PO BOX 220940 ANCHORAGE, AK 99523 PH: 907-349-1010 FAX: 907-349-1015

REVISION	BY	DATE

Project No. ___ Date MAY 2010
Designed LAP
Drawn DDR
Approved LAP

Sheet No.
G1.3

G:\ACAD\ATKA\2009 Water System Upgrades\G1.3 Abbreviations Callouts.dwg, 5/3/2011 2:41:26 PM, Flash, \\CE2MAIN\LANIER MP C2050/LD520C PCL 6

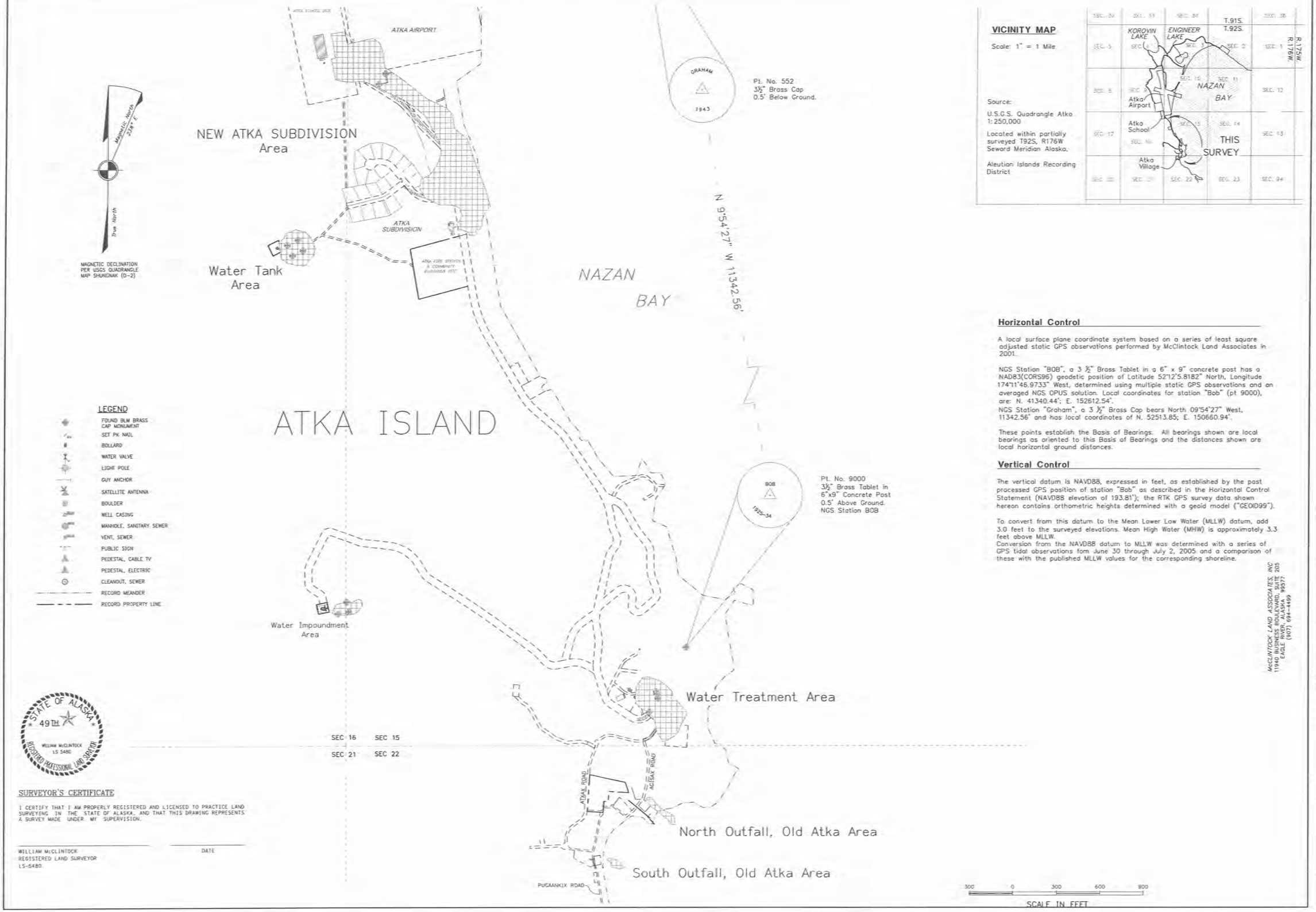

VICINITY MAP

Scale: 1" = 1 Mile

Source:

U.S.G.S. Quadrangle Atka 1: 250,000

Located within partially surveyed T92S, R176W Seward Meridian Alaska.

Aleutian Islands Recording District

Horizontal Control

A local surface plane coordinate system based on a series of least square adjusted static GPS observations performed by McClintock Land Associates in 2001.

NGS Station "BOB", a 3 ½" Brass Tablet in a 6" x 9" concrete post has a NAD83(CORS96) geodetic position of Latitude 52°12'5.8182" North, Longitude 174°11'46.9733" West, determined using multiple static GPS observations and an averaged NGS OPUS solution. Local coordinates for station "Bob" (pt 9000), are: N. 41340.44'; E. 152612.54'.
NGS Station "Graham", a 3 ½" Brass Cap bears North 09°54'27" West, 11342.56' and has local coordinates of N. 52513.85; E. 150660.94'.

These points establish the Basis of Bearings. All bearings shown are local bearings as oriented to this Basis of Bearings and the distances shown are local horizontal ground distances.

Vertical Control

The vertical datum is NAVD88, expressed in feet, as established by the post processed GPS position of station "Bob" as described in the Horizontal Control Statement (NAVD88 elevation of 193.81'); the RTK GPS survey data shown hereon contains orthometric heights determined with a geoid model ("GEOID99").

To convert from this datum to the Mean Lower Low Water (MLLW) datum, add 3.0 feet to the surveyed elevations. Mean High Water (MHW) is approximately 3.3 feet above MLLW.
Conversion from the NAVD88 datum to MLLW was determined with a series of GPS tidal observations fom June 30 through July 2, 2005 and a comparison of these with the published MLLW values for the corresponding shoreline.

McCLINTOCK LAND ASSOCIATES, INC
11940 BUSINESS BOULEVARD, SUITE 205
EAGLE RIVER, ALASKA 99577
(907) 694-4499

STATE OF ALASKA
49TH
WILLIAM McCLINTOCK
LS 5480
REGISTERED PROFESSIONAL LAND SURVEYOR

SURVEYOR'S CERTIFICATE

I CERTIFY THAT I AM PROPERLY REGISTERED AND LICENSED TO PRACTICE LAND SURVEYING IN THE STATE OF ALASKA, AND THAT THIS DRAWING REPRESENTS A SURVEY MADE UNDER MY SUPERVISION.

WILLIAM McCLINTOCK
REGISTERED LAND SURVEYOR
LS-5480

DATE

RECORD DRAWING CERTIFICATE
THESE DRAWINGS REFLECT RECORDED INFORMATION OBTAINED DURING CONSTRUCTION. INFORMATION PROVIDED HEREIN IS ACCURATE TO THE BEST OF MY KNOWLEDGE.
NAME
DATE

SCALE:

CONSTRUCTION RECORD
FIELD BOOK
STAKING
FOREMAN
AS-BUILT
INSPECTOR

2009 WATER SYSTEM UPGRADES

SURVEY CONTROL

ATKA, ALASKA

CE2 ENGINEERS, INC.
PO BOX 232649 ANCHORAGE, AK 99523 PH (907) 868-1010 FAX (907) 868-1015

REVISION	BY	DATE

Project No. ____
Date MAY 2010
Designed LAP
Drawn DDR
Approved LAP

Sheet No.
G1.4

G:\ACAD\ATKA\2009 Water System Upgrades\G1.4 Survey Control.dwg, 1/12/2011 9:48:26 AM, Flash, HP LaserJet 5100 Series PCL6.pc3

DESIGN CRITERIA
ATKA WATER TREATMENT PROJECT--ATKA, ALASKA

DESIGN LIFE (N)	20 YEARS
ANNUAL POPULATION GROWTH RATE (I)	2% ANNUALLY
CURRENT 2010 POPULATION (P)	61 PEOPLE (24 HOMES)
DESIGN 2030 POPULATION (F = P*(1+ I)^N)	91 PEOPLE (36 HOMES)
DESIGN WATER DEMAND PER CAPITA	100 GPCD
DESIGN DAILY DOMESTIC WATER DEMAND	9,100 GAL/DAY
PROJECTED PEAK COMMERCIAL FLOW RATE	30 GAL/MINUTE
DESIGN DAILY COMMERCIAL WATER DEMAND	28,800 GAL/DAY (30 GPM x 16 HR/DAY)
DESIGN DAILY TOTAL WATER DEMAND	37,900 GAL/DAY
DESIGN PEAK HR. RESIDENTIAL FLOW (AVG Daily x 4.5)	28.5 GAL/MINUTE
DESIGN PEAK TOTAL FLOW (RES. + COM.)	58.5 GAL/MINUTE
PROPOSED VOLUME OF WATER STORAGE TANK	130,300 GAL
PROPOSED DAYS OF STORAGE	3 DAYS
PROPOSED BASE ELEVATION OF WST	177.0 FT ABOVE MLLW
PROPOSED OVERFLOW ELEVATION OF WST	196.0 FT ABOVE MLLW
CURRENT ELEVATION OF HIGHEST HOUSE	63± FT ABOVE MLLW
PROPOSED PRESSURE OF HIGHEST HOUSE	49 PSI
CURRENT ELEVATION OF LOWEST HOUSE	11.5± FT ABOVE MLLW
PROPOSED PRESSURE OF LOWEST HOUSE	80 PSI
PROPOSED ELEVATION OF FINISH FLOOR OF WTP	177.5 FT ABOVE MLLW
DESIGN PRESSURE OF RAW WATER INTO WTP	12 PSI
DESIGN FLOW RATE INTO WTP	42 GPM
FILTRATION, PRIMARY TYPE	2 PRESSURE MULTIMEDIA
FILTER DIAMETER	60" (EACH FILTER)
FILTER AREA	19.63 SQ FT
DESIGN FLOW RATE THROUGH PLANT	42 GPM
HYDRAULIC LOADING ON FILTERS	1.1 GPM/SQ FT
DESIGN FLOW RATE OF BACKWASH WATER	(15 GPM/SQ FT) x (19.63 SQ FT) = 295 GPM
FILTER AIR SCOUR LOADING RATE	4 CFM/SQ FT
FILTER AIR SCOUR FLOW RATE	78.5 CFM PER FILTER

FILTER MEDIA

FREEBOARD	(30" DEEP)
ANTHRACITE	1.0 to 1.1 MM PARTICLE SIZE (18" DEEP)
SUBANGULAR QUARTZ SAND	0.45 to 0.55 MM PARTICLE SIZE (12" DEEP)
FILTER GARNET	#30 to #40 MESH PARTICLE SIZE (2" DEEP)
SUPPORT GARNET	#8 to #12 MESH PARTICLE SIZE (2" DEEP)
SUPPORT GRAVEL	1/8 to1/4 INCH (2" DEEP)
SUPPORT GRAVEL	1/4 to1/2 INCH (2" DEEP)
SUPPORT GRAVEL	1/2 to 3/4 INCH (2" DEEP)
SUPPORT GRAVEL	3/4 to1-1/2 INCH (TO TOP OF LATERALS ON UNDERDRAIN)

FILTRATION REMOVAL CREDIT -- ASSUMED 2.0-LOG

CHLORINE DISINFECTION CALCULATIONS

DISINFECTION - CALCIUM HYPOCHLORITE INJECTION
(FREE CHLORINE RESIDUAL)
INJECTION PUMP-LMI OR EQUAL

CT REQUIRED FOR 1.0 INACTIVATION CREDIT
CT FORMULA FROM ADEC 18AAC 80.655(b)
CT(Required) = (LOG INACTIVATION) (5.057) (E^A) (E^B) (E^C)
E = 2.72
A = -0.0693 X TEMP (°C)
B = 0.361 X pH
C = 0.113 X CHLORINE CONCENTRATION (MG/L)
CHLORINE CONCENTRATION = 0.4 MG/L (FREE CHLORINE RESIDUAL)
pH = 7.8
TEMPERATURE = 5° C (41° F)
LOG INACTIVATION = 1.0
CT (Required) = 63 MG-MIN/L

ACTUAL CT OF SYSTEM

TANK BAFFLE FACTOR (BF) = 0.10
TANK INLET IS DISCHARGED
and DIFFUSED ON OPPOSITE SIDE OF TANK FROM OUTLET
TANK OUTLET IS OVERSIZED (12"), PROVIDING A REDUCED OUTLET VELOCITY
VOLUME OF TANK = 130,300 GALLONS
ASSUME TANK OPERATING RANGE of 20% (Approx. 4 Feet)
USABLE VOLUME FOR CT (80%) = (130,300 GAL) X 0.80 = 104,240 GAL
DESIGN PEAK HOURLY FLOW RATE = 58.5 GPM

CT (Actual) = (Usable Volume/Flow Rate)(BF)(Cl2 Concentration)
= (104,240 GAL/58.5 GPM)(0.1)(0.4 MG/L)
= 71 MG-MIN/L

CT (Actual) > CT (Required) : 71 MG-MIN/L > 63 MG-MIN/L = OK

CALCULATED MINIMUM TANK LEVEL 92,140 GALLONS OR APPROXIMATELY 70% OF THE TANK VOLUME.

RECORD DRAWING CERTIFICATE
THESE DRAWINGS REFLECT RECORDED INFORMATION OBTAINED DURING CONSTRUCTION. INFORMATION PROVIDED HEREIN IS ACCURATE TO THE BEST OF MY KNOWLEDGE.
NAME DATE

SCALE:

CONSTRUCTION RECORD
FIELD BOOK
STAKING
FOREMAN
AS-BUILT
INSPECTOR

2009 WATER SYSTEM UPGRADES
PROJECT DESIGN AND CRITERIA
ATKA, ALASKA

CE2 ENGINEERS, INC.
PO BOX 220346 ANCHORAGE, AK 99522 PH: 907-349-1010 FAX: 907-349-1015

REVISION	BY	DATE

Project No. ___ Date MAY 2010 Designed LAMRE Drawn DDR Approved LAMRE

Sheet No.
G1.5

G:\ACAD\ATKA\2009 Water System Upgrades\G1.5 Project Design Criteria.dwg, 5/4/2011 8:01:57 AM, Flash, LANIER MP C2050_LD520C PCL 6BLK WHT.pc3

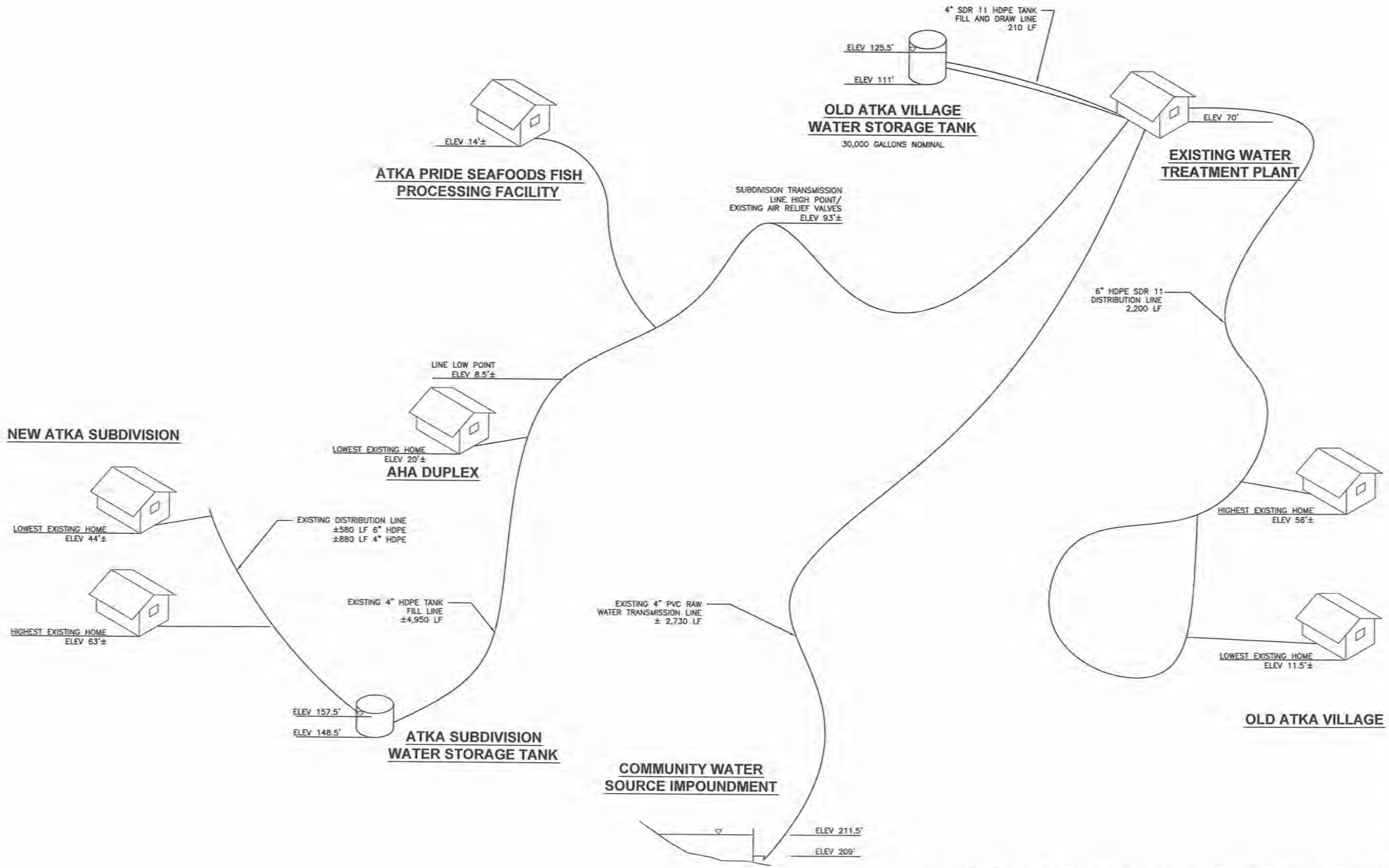

EXISTING SYSTEM ELEVATION SCHEMATIC

RECORD DRAWING CERTIFICATE

THESE DRAWINGS REFLECT RECORDED INFORMATION OBTAINED DURING CONSTRUCTION. INFORMATION PROVIDED HEREIN IS ACCURATE TO THE BEST OF MY KNOWLEDGE.

NAME _____ DATE _____

SCALE:

BAR IS ONE INCH ON ORIGINAL DRAWING

IF NOT ONE INCH ON THIS SHEET ADJUST SCALES ACCORDINGLY

CONSTRUCTION RECORD

FIELD BOOK

STAKING

FOREMAN

AS-BUILT

INSPECTOR

REVISION | BY | DATE

2009 WATER SYSTEM UPGRADES

EXISTING ELEVATION SCHEMATIC

ATKA, ALASKA

CE2 ENGINEERS, INC.
PO BOX 232048 ANCHORAGE, AK 99523 PH: 907-349-1010 FAX: 907-349-1015

Project No: _____ Date: MAY 2010 Designed: LAP Drawn: LAW Approved: LAP

Sheet No: G1.6A

G:\ACAD\ATKA\2009 Water System Upgrades\G1.6a Existing Elev Schematic.dwg, 2/20/2011 8:47:55 AM, Flash, LANIER MP C2050_LD520C PCL 6.pc3

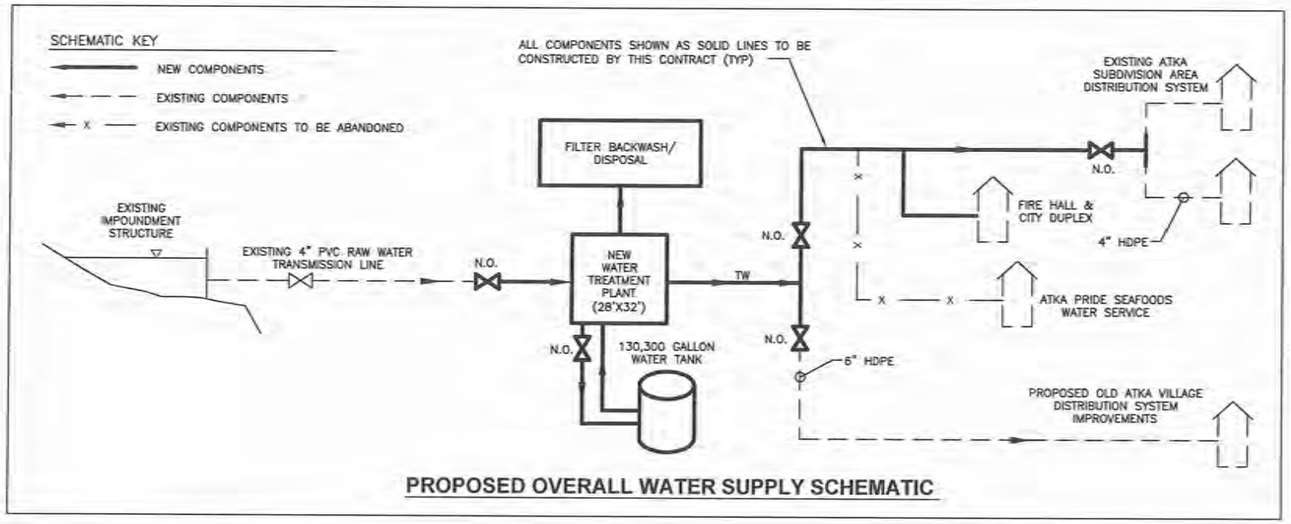

PROPOSED OVERALL WATER SUPPLY SCHEMATIC

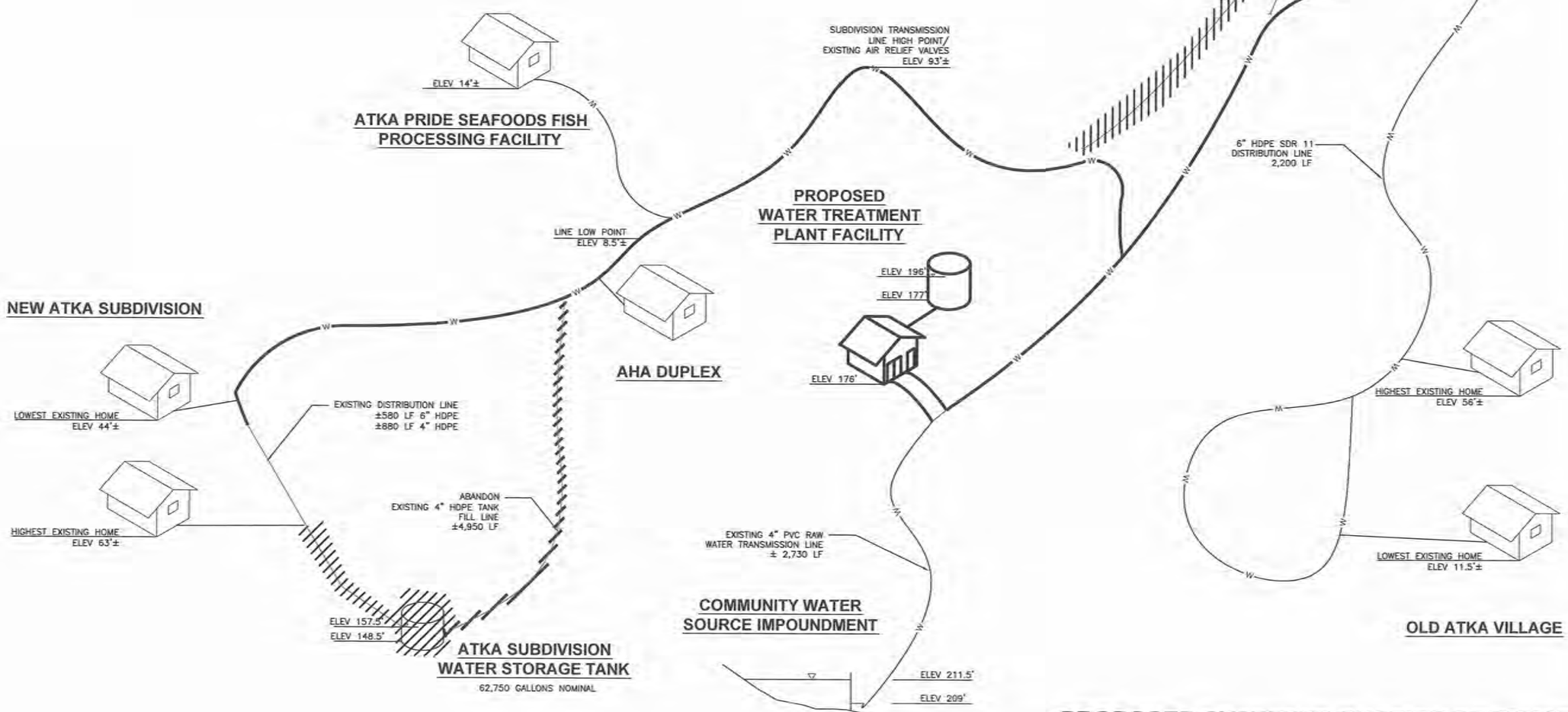

PROPOSED SYSTEM ELEVATION SCHEMATIC

RECORD DRAWING CERTIFICATE
THESE DRAWINGS REFLECT RECORDED INFORMATION OBTAINED DURING CONSTRUCTION. INFORMATION PROVIDED HEREIN IS ACCURATE TO THE BEST OF MY KNOWLEDGE.
NAME
DATE

SCALE:

CONSTRUCTION RECORD
FIELD BOOK
STAKING
FOREMAN
AS-BUILT
INSPECTOR

STATE OF ALASKA — REGISTERED PROFESSIONAL ENGINEER — LEE A. PHILLIPS — 9861 — EXPIRES 12/31/2011

2009 WATER SYSTEM UPGRADES

PROPOSED ELEVATION SCHEMATIC

ATKA, ALASKA

CE2 ENGINEERS, INC.
PO BOX 223948 ANCHORAGE, AK 99523 PH: 907-349-1010 FAX: 907-349-1015

REVISION	BY	DATE

Project No. ____ Date MAY 2010
Designed LAP
Drawn LAW
Approved LAP

Sheet No.
G1.6B

G:\ACAD\ATKA\2009 Water System Upgrades\G1.6b Proposed Elev Schematic.dwg, 2/16/2011 1:40:14 PM, cmerz, LANIER MP C2050_LD520C PCL 6.pc3

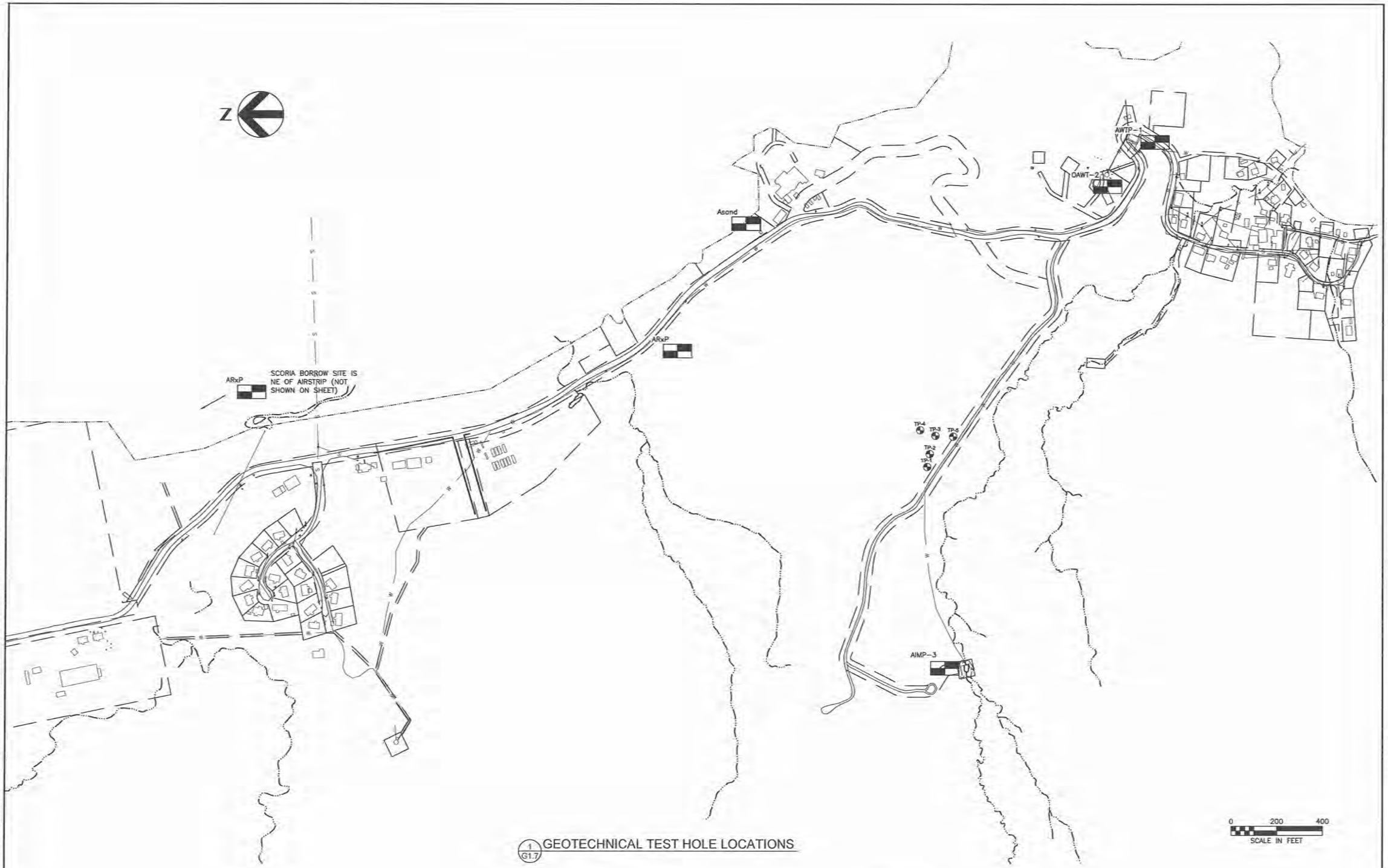

1 G1.7 GEOTECHNICAL TEST HOLE LOCATIONS

LEGEND

TP-4 LOG HOLE BY DUANE MILLER - JUNE 2008. SEE SHEET G1.8 FOR SOIL LOGS AND DATA

AWTP-1 LOG HOLE BY DUANE MILLER - SEPT. 2005 SEE SHEET G1.9 FOR SOIL LOGS AND DATA

SOURCE:

TESTHOLE LOCATION AND CLASSIFICATION INFORMATION TAKEN FROM DUANE MILLER & ASSOCIATES GEOTECHNICAL INVESTIGATION FOR THE ATKA WATER PROJECT – MARCH 2006. TYPICAL FOR G1.8 & G1.9.

RECORD DRAWING CERTIFICATE

THESE DRAWINGS REFLECT RECORDED INFORMATION OBTAINED DURING CONSTRUCTION. INFORMATION PROVIDED HEREIN IS ACCURATE TO THE BEST OF MY KNOWLEDGE.

NAME DATE

SCALE:

BAR IS ONE INCH ON ORIGINAL DRAWING

IF NOT ONE INCH ON THIS SHEET, ADJUST SCALES ACCORDINGLY

CONSTRUCTION RECORD

FIELD BOOK

STAKING

FOREMAN

AS-BUILT

INSPECTOR

STATE OF ALASKA 49TH Lloyd A. Hanson NO. CE 9980 REGISTERED PROFESSIONAL ENGINEER

2009 WATER SYSTEM UPGRADES

GEOTECHNICAL TEST PIT LOCATIONS

ATKA, ALASKA

CE2 ENGINEERS, INC.

PO BOX 232046 ANCHORAGE, AK 99523 PH: 907-349-1010 FAX: 907-349-1015

REVISION	BY	DATE

Project No.

Date MAY 2010

Designed LAP

Drawn DDR

Approved LAP

Sheet No. G1.7

G:\ACAD\ATKA\2009 Water System Upgrades\G1.7_8-9 Geo Info.dwg, 1/12/2011 9:55:14 AM, Flash, LANIER MP C2050_LD520C PCL 6BLK WHIT.pc3

DUANE MILLER ASSOCIATES LLC

Project: Atka Water & Sewer Project
DMA Job No.: 4149.035
Logged By: N. Luzny

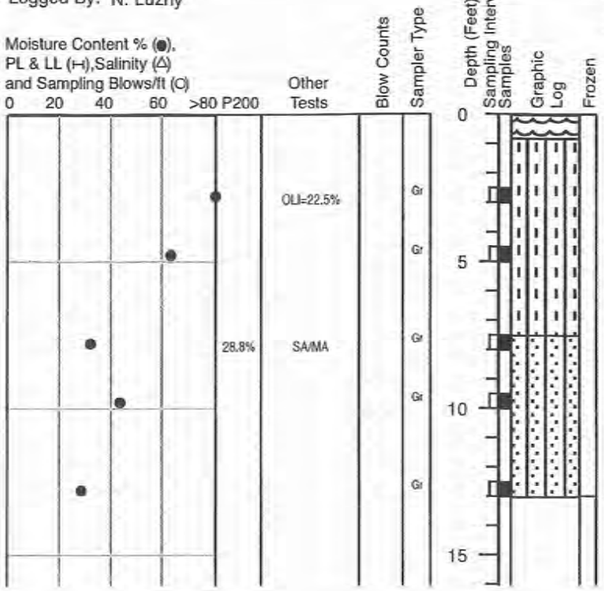

Log of HOLE: TP-01

Date Drilled: June 30, 2008
Contractor.: CE2
Equipment: Hitachi Z 230 Excavator
GPS Coord.: 52°12'10.177" N 174°12'10.911" W (WGS 84)
Elevation: 178.9 feet

Description

PEAT (Pt) Live organic mat, grass roots

ORGANIC SILT (OL) Brown to orange-brown, moist, with fibrous organic material

SILTY SAND (SM) Brown, moist, with <15% subangular rock fragments to 2 inches and boulders to 2-foot diameter

Test pit completed at 13 feet on 6/30/2008

DUANE MILLER ASSOCIATES LLC

Project: Atka Water & Sewer Project
DMA Job No.: 4149.035
Logged By: N. Luzny

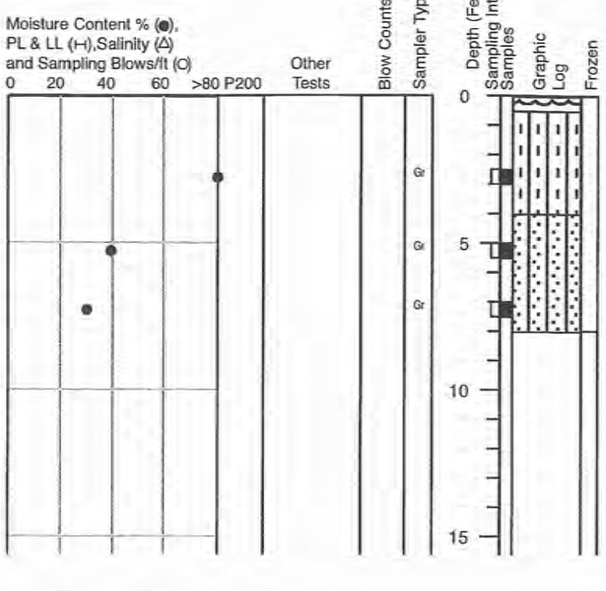

Log of HOLE: TP-03

Date Drilled: June 30, 2008
Contractor.: CE2
Equipment: Hitachi Z 230 Excavator
GPS Coord.: 52°12'09.835" N 174°12'08.705" W (WGS 8
Elevation: -

Description

PEAT (Pt) Live organic mat, grass roots

ORGANIC SILT (OL) Brown to orange-brown, moist, with fibrous organic material

SILTY GRAVELLY SAND (SM) Brown, moist, with subangular rock fragments to 2-foot diameter

Test pit completed at 8 feet on 6/30/2008

DUANE MILLER ASSOCIATES LLC

Project: Atka Water & Sewer Project
DMA Job No.: 4149.035
Logged By: N. Luzny

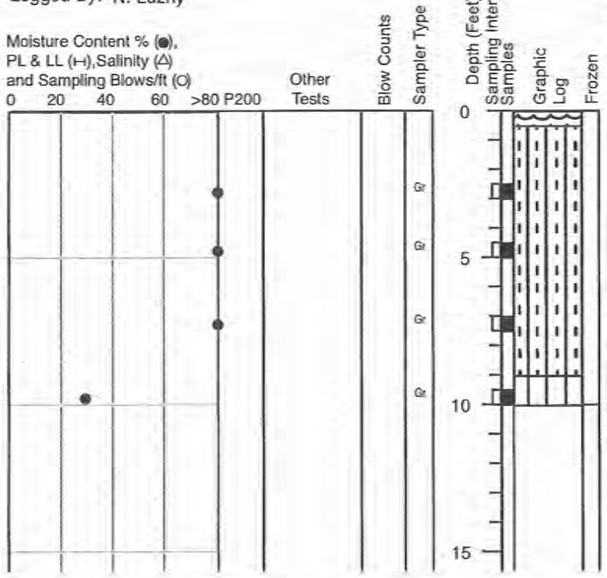

Log of HOLE: TP-02

Date Drilled: June 30, 2008
Contractor.: CE2
Equipment: Hitachi Z 230 Excavator
GPS Coord.: 52°12'10.060" N 174°12'10.011" W (WGS 84)
Elevation: 176.8 feet

Description

PEAT (Pt) Live organic mat, grass roots

ORGANIC SILT (OL) Brown to orange-brown, moist, with peat (Pt) interbeds

GRAVELLY SILT (ML) Brown to orange-brown, moist, with subangular rock fragments to 1-foot diameter

Test pit completed at 10 feet on 6/30/2008

DUANE MILLER ASSOCIATES LLC

Project: Atka Water & Sewer Project
DMA Job No.: 4149.035
Logged By: N. Luzny

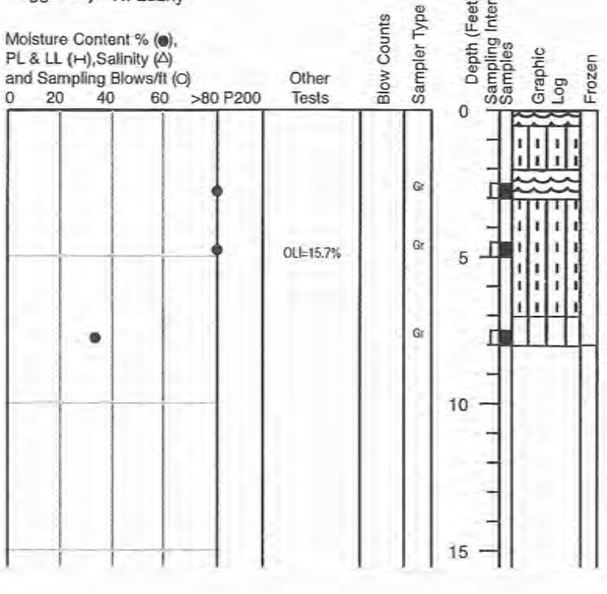

Log of HOLE: TP-04

Date Drilled: June 30, 2008
Contractor.: CE2
Equipment: Hitachi Z 230 Excavator
GPS Coord.: 52°12'10.473" N 174°12'08.333" W (WGS 8
Elevation: 172.6 feet

Description

PEAT (Pt) Live organic mat, grass roots

ORGANIC SILT (OL) Brown to orange-brown, moist, with fibrous organic material

PEAT (Pt) Brown, fibrous, with orange-brown organic silt (OL)

ORGANIC SILT (OL) Brown to orange-brown, moist, with fibrous organic material

GRAVELLY SILT (ML) Brown to orange-brown, moist, with subangular rock fragments to 1-foot diameter

Test pit completed at 8 feet on 6/30/2008

GEOTECHNICAL TEST HOLES

1 / G1.8

NOTE: FOR TEST HOLE LOCATIONS SEE SHEET G1.7

TP-4 — LOG HOLE BY DUANE MILLER - JUNE 2008 - THIS SHEET

AWTP-1 — LOG HOLE BY DUANE MILLER - SEPT. 2005 SEE SHEET G1.9

RECORD DRAWING CERTIFICATE
THESE DRAWINGS REFLECT RECORDED INFORMATION OBTAINED DURING CONSTRUCTION. INFORMATION PROVIDED HEREIN IS ACCURATE TO THE BEST OF MY KNOWLEDGE.
NAME
DATE

SCALE:

CONSTRUCTION RECORD
FIELD BOOK
STAKING
FOREMAN
AS-BUILT
INSPECTOR

2009 WATER SYSTEM UPGRADES

GEOTECHNICAL INFORMATION

ATKA, ALASKA

CE2 ENGINEERS, INC.
PO BOX 223948 ANCHORAGE, AK 99523 PH: 907-349-1010 FAX: 907-349-1015

REVISION	BY	DATE

Project No. ____ Date MAY 2010 Designed LAP Drawn DDR Approved LAP

Sheet No.
G1.8

G:\ACAD\ATKA\2009 Water System Upgrades\G1.7_8-9-10-11-12-13 Geo Info.dwg, 5/3/2011 2:40:16 PM, Flash, LANIER MP C2050_LD520C PCL 6.pc3

DUANE MILLER ASSOCIATES LLC

Project: Atka Water & Sewer Project
DMA Job No.: 4149.035
Logged By: N. Luzny

Log of HOLE: TP-05

Date Drilled: June 30, 2008
Contractor.: CE2
Equipment: Hitachi Z 230 Excavator
GPS Coord.: 52°12'09.064" N 174°12'08.794" W (WGS 84)
Elevation: -

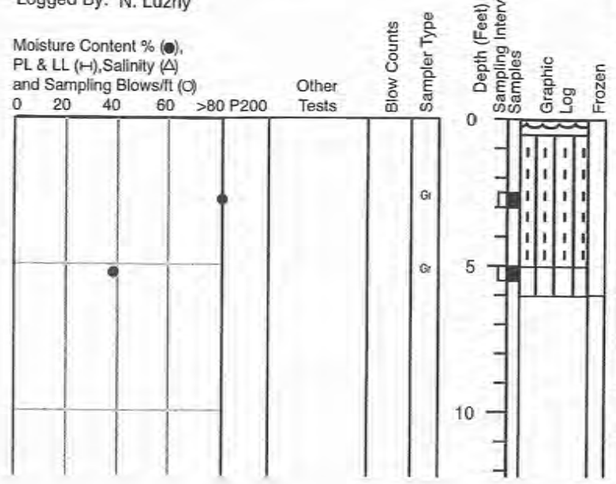

Description

PEAT (Pt) Live organic mat, grass roots

ORGANIC SILT (OL) Brown to orange-brown, moist, with peat (Pt) interbeds

GRAVELLY SILT (ML) Brown to orange-brown, moist, with subangular gravel to 1.5 inches and 5-10% subangular rock fragments to 2-foot diameter

Test pit completed at 6 feet on 6/30/2008

1/G1.8 GEOTECHNICAL TEST HOLES

NOTE: FOR TEST HOLE LOCATIONS SEE SHEET G1.7

TP-4 LOG HOLE BY DUANE MILLER - JUNE 2008 - THIS SHEET

AWTP-1 LOG HOLE BY DUANE MILLER - SEPT. 2005 SEE SHEET G1.9

RECORD DRAWING CERTIFICATE
THESE DRAWINGS REFLECT RECORDED INFORMATION OBTAINED DURING CONSTRUCTION. INFORMATION PROVIDED HEREIN IS ACCURATE TO THE BEST OF MY KNOWLEDGE.
NAME DATE

SCALE

CONSTRUCTION RECORD
FIELD BOOK
STAKING
FOREMAN
AS-BUILT
INSPECTOR

2009 WATER SYSTEM UPGRADES

GEOTECHNICAL INFORMATION

ATKA, ALASKA

CE2 ENGINEERS, INC.
PO BOX 220648 ANCHORAGE, AK 99503 PH: 907-349-1015 FAX: 907-349-1015

REVISION	BY	DATE

Project No. ____ Date MAY 2010
Designed LAP
Drawn DDR
Approved LAP

Sheet No.
G1.9

G:\AC\ADI\ATKA\2009 Water System Upgrades\G1.7_8-9-10-11-12-13 Geo Info.dwg, 5/3/2011 2:40:02 PM, Flash, LANIER MP C2050_LD520C PCL 6.pc3

DUANE MILLER & ASSOCIATES

Project: Atka Water Project
DM&A Job No.: 4086.055
Logged By: L. Silliphant

Moisture Content % (●), PL & LL (⊢⊣), Salinity (Δ) and Sampling Blows/ft (○)

0 20 40 60 >80 P200

Other Tests: OLI=21.6%; PI=MH; PI=MH

Blow Counts: Gr; Gr; Gr; Gr; Gr

Sampler Type

Depth (Feet): 0, 5, 10, 15, 20, 25, 30, 35, 40

Sampling Interval Samples

Graphic Log

Frozen

Log of HOLE: AWTP-1

Date Drilled: 9/1/05
Contractor.: City of Atka
Equipment: Catepillar 420D
GPS Coord.: N 52°12'00.7", W 174°11'48.2" NAD 83
Elevation: 67'

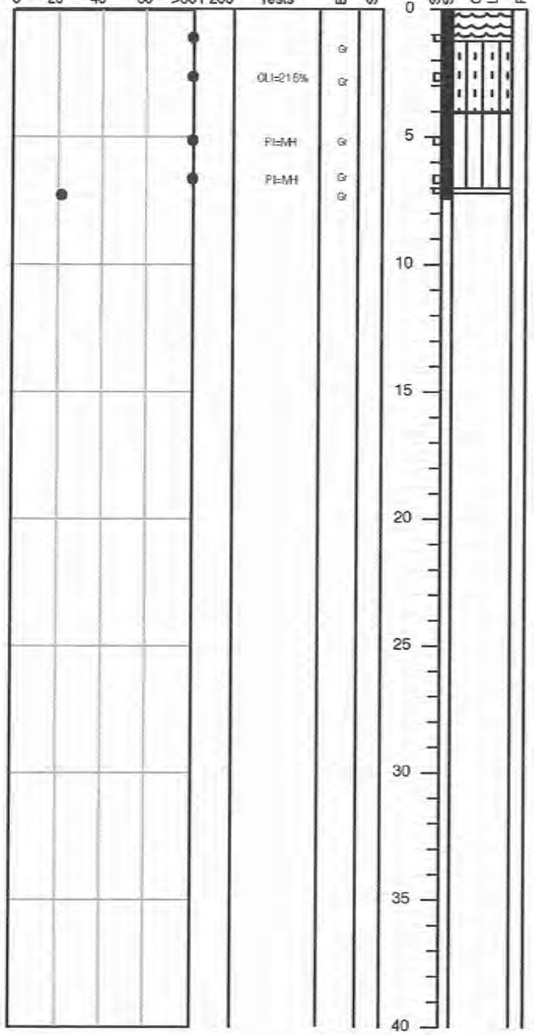

Description

Peat (Pt) Brown, fibrous, soft, wet,

Organic Silt (OL) Brown to red-brown, fibrous, w/ trace fine sand, soft, wet, (ash), water slowly dripping into test pit, 2.5" tan silty ash layer at 2.8'

Sandy Silt (MH) Light brown, w/ some fibrous organics (roots), wet, plastic (ash)

Red, medium stiff, moist, plastic below 6'

Bedrock (Rock) Green, cobble size pieces of volcanic rock to 6", w/ brown and gray clay interspersed between pieces of bedrock, moist

Bottom of test pit at 7.2'. Note: sides of test pit slumping into hole due to high moisture content in the soil.

Duane Miller & Associates
Job No.: 4086.055
Date: March 2006

LOG of TEST Test Hole AWTP-1
Atka Water Project
Atka, Alaska

Plate 2

DUANE MILLER & ASSOCIATES

Project: Atka Water Project
DM&A Job No.: 4086.055
Logged By: L. Silliphant

Moisture Content % (●), PL & LL (⊢⊣), Salinity (Δ) and Sampling Blows/ft (○)

0 20 40 60 >80 P200

Other Tests: OLI=26.2%; PI=MH

Blow Counts

Sampler Type: Gr (RAS); Gr; Gr

Depth (Feet): 0, 5, 10, 15, 20, 25, 30, 35, 40

Sampling Interval Samples

Graphic Log

Frozen

Log of HOLE: OAWT-2

Date Drilled: 9/1/05
Contractor.: City of Atka
Equipment: Catepillar 420D
GPS Coord.: N 52°12'02.2", W 174°11'50.6" NAD 83
Elevation: 109'

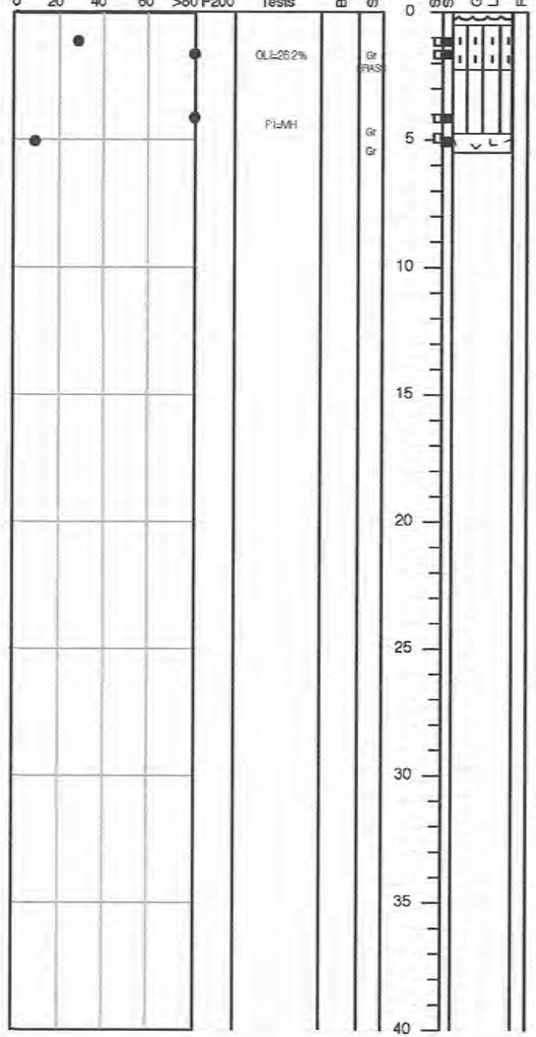

Description

Peat (Pt) Red-brown, fibrous, soft

Organic Silt (OL) Black, w/ some fibrous organics (roots), w/ trace fine to medium sand, soft, dry (ash)

Sandy Silt (MH) Red, medium stiff, moist, plastic, hard to get out of bucket, (ash)

Bedrock (Rock) Black and green cobble size pieces of bedrock to 4" (andesite), w/ tan clay interspersed between pieces of bedrock.

Bottom of test pit at 5.5'.

Duane Miller & Associates
Job No.: 4086.055
Date: March 2006

LOG of TEST Test Hole OAWT-2
Atka Water Project
Atka, Alaska

Plate 3

1 G1.10 GEOTECHNICAL TEST HOLES

NOTE: FOR TEST HOLE LOCATIONS SEE SHEET G1.7

TP-4 LOG HOLE BY DUANE MILLER - JUNE 2008 SEE SHEET G1.8

AWTP-1 LOG HOLE BY DUANE MILLER - SEPT. 2005 - THIS SHEET

RECORD DRAWING CERTIFICATE
THESE DRAWINGS REFLECT RECORDED INFORMATION OBTAINED DURING CONSTRUCTION. INFORMATION PROVIDED HEREIN IS ACCURATE TO THE BEST OF MY KNOWLEDGE.
NAME DATE

SCALE:
BAR IS ONE INCH ON ORIGINAL DRAWING
IF NOT ONE INCH ON THIS SHEET, ADJUST SCALES ACCORDINGLY

CONSTRUCTION RECORD
FIELD BOOK
STAKING
FOREMAN
AS-BUILT
INSPECTOR

STATE OF ALASKA 49TH Lloyd A. Peterson No. CE 6657 REGISTERED PROFESSIONAL ENGINEER

2009 WATER SYSTEM UPGRADES
GEOTECHNICAL INFORMATION
ATKA, ALASKA

CE2 ENGINEERS, INC.
PO BOX 223646 ANCHORAGE, AK 99523 PH: 907-349-1010 FAX: 907-349-1015

REVISION	BY	DATE

Project No.
Date MAY 2010
Designed LAP
Drawn DDR
Approved LAP

Sheet No. G1.10

G:\ACAD\ATKA\2009 Water System Upgrades\G1.7_8-9-10-11-12-13 Geo Info.dwg, 5/3/2011 2:39:44 PM, Flash, LANIER MP C2050_LD520C PCL 6.pc3

DUANE MILLER & ASSOCIATES

Project: Atka Water Project
DM&A Job No.: 4086.055
Logged By: L. Silliphant

Log of HOLE: AIMP-3

Date Drilled: 9/1/05
Contractor.: City of Atka
Equipment: Catepillar 420D
GPS Coord.: N 52° 12'09.9", W 174° 12'26.3" NAD 83
Elevation: 260'

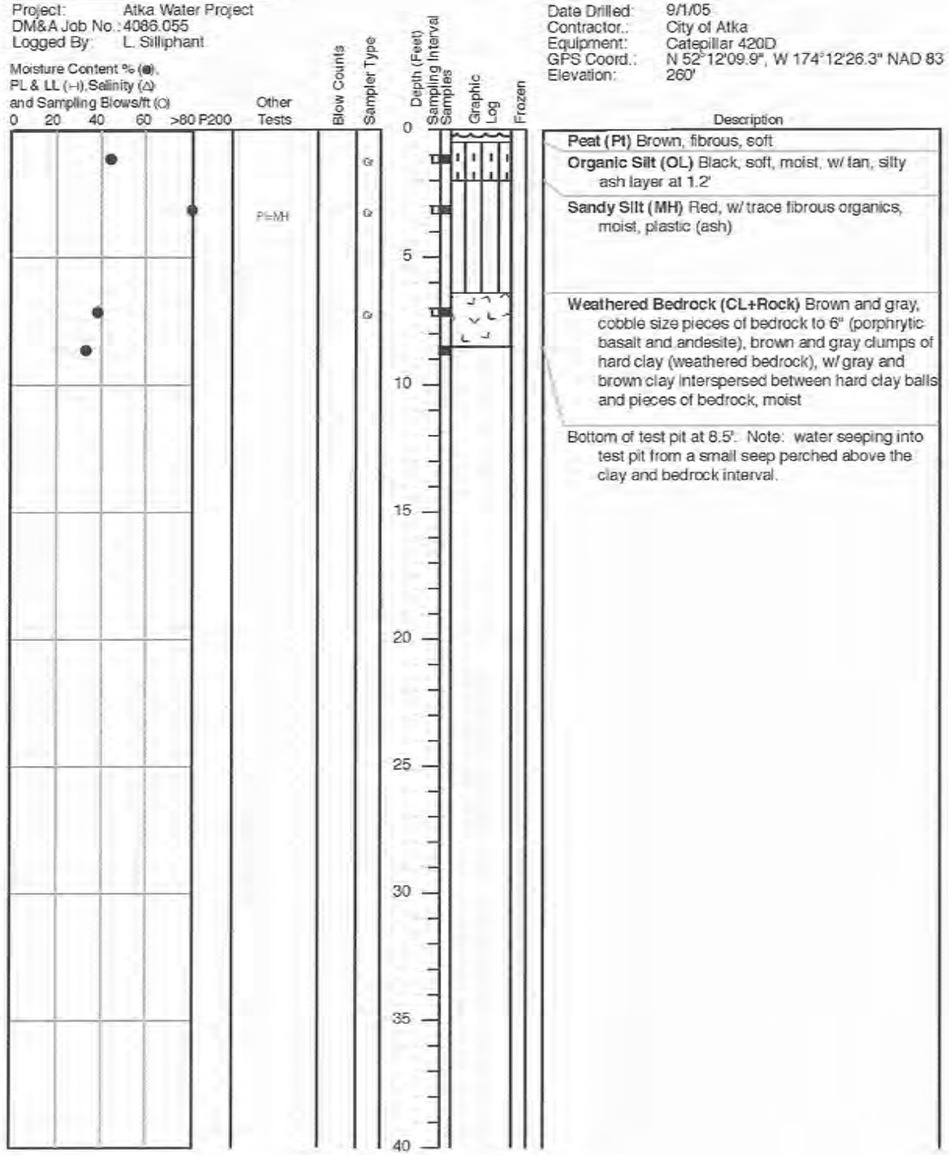

Description
Peat (Pt) Brown, fibrous, soft
Organic Silt (OL) Black, soft, moist, w/ tan, silty ash layer at 1.2'
Sandy Silt (MH) Red, w/ trace fibrous organics, moist, plastic (ash)
Weathered Bedrock (CL+Rock) Brown and gray, cobble size pieces of bedrock to 6" (porphyritic basalt and andesite), brown and gray clumps of hard clay (weathered bedrock), w/ gray and brown clay interspersed between hard clay balls and pieces of bedrock, moist
Bottom of test pit at 8.5'. Note: water seeping into test pit from a small seep perched above the clay and bedrock interval.

Duane Miller & Associates
Job No.: 4086.055
Date: March 2006

LOG of TEST Test Hole AIMP-3
Atka Water Project
Atka, Alaska

Plate 4

MAJOR DIVISIONS			SYMBOL	TYPICAL NAMES
COARSE GRAINED SOILS: 50% or more larger than #200 sieve, 0.075 mm	GRAVELS: More than half of the coarse fraction is larger than #4 sieve size, > 4.75 mm.	Clean gravels with little or no fines	GW	Well graded gravels, sandy gravel
			GP	Poorly graded gravels, sandy gravel
		Gravels with more than 12% fines	GM	Silty gravels, silt sand gravel mixtures
			GC	Clayey gravels, clay sand gravel mixtures
	SANDS: More than half of the coarse fraction is smaller than #4 sieve size, < 4.75 mm.	Clean sands with little or no fines	SW	Well graded sand, gravelly sand
			SP	Poorly graded sands, gravelly sand
		Sands with more than 12% fines	SM	Silty sand, silt gravel sand mixtures
			SC	Clayey sand, clay gravel sand mixtures
FINE GRAINED SOILS: > 50% finer than #200 sieve	SILTS and CLAYS Plasticity Chart	Liquid limit less than 50	ML	Inorganic silt and very fine sand, rock flour
			CL	Inorganic clay, gravelly and sandy clay, silty clay
			OL	Organic silts and clay of low plasticity
		Liquid limit greater than 50	MH	Inorganic silt
			CH	Inorganic clay, fat clay
			OH	Organic silt and clay of high plasticity
HIGHLY ORGANIC SOILS			Pt	Peat and other highly organic soil

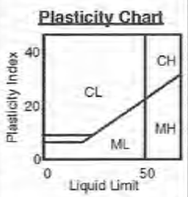

UNIFIED SOIL CLASSIFICATION SYSTEM

GROUP	ICE VISIBILITY	DESCRIPTION		SYMBOL	
N	Segregated ice not visible by eye	Poorly bonded or friable		Nf	
		Well bonded	No excess ice	Nb	Nbn
			Excess microscopic ice		Nbe
V	Segregated ice is visible by eye and is one inch or less in thickness	Individual ice crystals or inclusions		Vx	
		Ice coatings on particles		Vc	
		Random or irregularly oriented ice		Vr	
		Stratified or distinctly oriented ice		Vs	
		Uniformly distributed ice		Vu	
ICE	Ice greater than one inch in thickness	Ice with soil inclusions		ICE + soil type	
		Ice without soil inclusions		ICE	

ICE CLASSIFICATION SYSTEM

KEY TO TEST DATA

PP = Pocket Penetrometer
Dd = Dry Density (pcf)
LL = Liquid Limit
PL = Plastic Limit
PI = Plastic Index
NP = non Plastic
SpG = Specific Gravity
SA = Sieve Analysis
MA = Sieve and Hydrometer Analysis
OLI = Organic Loss
RD = Relative Density
D1557 = modified Proctor
TS = Thaw Consolidation
Cons = Consolidation
TXUU = Unconsolidated Undrained Triaxial
TXCU = Consolidated Undrained Triaxial
TXCD = Consolidated Drained Triaxial
Strength Data
XXX(YYY), where
XXX = $(\sigma_1-\sigma_3)/2$
YYY = σ_3

KEY TO SAMPLE TYPE

gr = Grab sample
Ag = Auger grab
Ab = Auger bulk
Sh = 2.5" ID split barrel w/ 340 lb manual hammer
Sh* = 2.5" ID split barrel w/ 140 lb manual hammer
Sha= 2.5" ID split barrel w/ 340 lb automatic hammer
P = Pushed Sampler
Tw = Shelby tube
Ss = 1.4" ID split barrel w/ 140 lb manual hammer
Cc = 3.25" continuous core barrel

Duane Miller & Associates
Job No.:4086.055
Date: March 2006

SOIL and ICE CLASSIFICATION and KEY TO DATA
Atka Water Project
Atka, Alaska

Plate 5

1 / G1.11 GEOTECHNICAL TEST HOLES

NOTE: FOR TEST HOLE LOCATIONS SEE SHEET G1.7

TP-4 LOG HOLE BY DUANE MILLER - JUNE 2008 SEE SHEET G1.8

AIMP-1 LOG HOLE BY DUANE MILLER - SEPT. 2005 - THIS SHEET

RECORD DRAWING CERTIFICATE
THESE DRAWINGS REFLECT RECORDED INFORMATION OBTAINED DURING CONSTRUCTION. INFORMATION PROVIDED HEREIN IS ACCURATE TO THE BEST OF MY KNOWLEDGE.
NAME DATE

SCALE:

CONSTRUCTION RECORD
FIELD BOOK
STAKING
FOREMAN
AS-BUILT
INSPECTOR

2009 WATER SYSTEM UPGRADES

GEOTECHNICAL INFORMATION

ATKA, ALASKA

CE2 ENGINEERS, INC.
PO BOX 222948 ANCHORAGE, AK 99523 PH: 907-349-1010 FAX: 907-349-1015

REVISION	BY	DATE

Project No.
Date MAY 2010
Designed LAP
Drawn DDR
Approved LAP

Sheet No.
G1.11

G:\CAD\ATKA\2009 Water System Upgrades\G1.7_8-9-10-11-12-13 Geo Info.dwg, 5/3/2011 2:39:24 PM, Flash, LANIER MP C2050_LD520C PCL 6BLK WHIT.pc3

Test Hole	Sample Depth	Soil Type (USCS)	Thermal State	Sampler Type	Moisture Content	Dry Density	Organic Loss	Salinity	Passing #200	Other Tests
AWTP-1	1.0 ft.	Pt	Unfrozen	Gr	164.7%					
AWTP-1	2.5 ft.	OL	Unfrozen	Gr	208.3%		22%			
AWTP-1	5.0 ft.	MH	Unfrozen	Gr	102.0%					PI
AWTP-1	6.5 ft.	MH	Unfrozen	Gr	124.1%					PI
AWTP-1	7.2 ft.	ROCK	Unfrozen	Gr	22.0%					
OAWT-2	1.0 ft.	ML	Unfrozen	Gr	28.9%					
OAWT-2	1.5 ft.	OL	Unfrozen	Brass	154.2%	26 pcf	26%			
OAWT-2	4.0 ft.	MH	Unfrozen	Gr	220.5%					PI
OAWT-2	4.9 ft.	ROCK	Unfrozen	Gr	9.8%					
AIMP-3	1.0 ft.	OL	Unfrozen	Gr	44.1%					
AIMP-3	3.0 ft.	MH	Unfrozen	Gr	140.4%					PI
AIMP-3	7.0 ft.	CL + Rock	Unfrozen	Gr	38.5%					
AIMP-3	8.5 ft.	CL + Rock	Unfrozen	Gr	33.4%					
AWTP-SE	1.5 ft.	SP	Unfrozen	Gr	69.3%			0 ppt		
NAWT-4	1.6 ft.	ML	Unfrozen	Gr	137.9%					
NAWT-4	1.0 ft.	OL	Unfrozen	Gr	154.2%					
DAM-5	1.5 ft.	OL	Unfrozen	Gr	159.1%					
AScP-1	0.0 ft.	GW-GM	Unfrozen	Gr	8.5%				6.8%	
AScP-2	0.0 ft.	GW-GM	Unfrozen	Gr						
Asand-1	0.0 ft.	SP	Unfrozen	Gr	6.0%			0 ppt	0.3%	
ARxP-1	0.0 ft.	Rock	Unfrozen	Gr						

Duane Miller & Associates
Job No. 4086.055
March 2006

SUMMARY OF SAMPLES
Atka Water Project
Atka, Alaska

Plate 6

Boring =>	AScP-1	Asand-1
Depth =>	0.0 ft.	0.0 ft.
3" =>	100%	100%
1.5" =>	77%	100%
3/4" =>	53%	100%
3/8" =>	41%	100%
#4 =>	35%	100%
#10 =>	29%	100%
#20 =>	22%	100%
#40 =>	17%	93%
#60 =>	13%	23%
#100 =>	10%	1%
#200 =>	6.8%	0.3%
Analysis of Data		
D10 size =>	0.153 mm	0.186 mm
D30 size =>	2.329 mm	0.264 mm
D50 size =>	16.197 mm	0.308 mm
D60 size =>	23.371 mm	0.332 mm
Coeff. of Uniformity, Cu =	152.27	1.79
Coeff. of Curvature, Cc =	1.51	1.13
Gravel (+#4) percentage =	65.3%	0.0%
AASHTO Gravel (+#10) =	71.0%	0.0%
Sand percentage =	27.9%	99.7%
Fines percentage =	6.8%	0.3%
Unified Soil Class Symbol =	GW-GM	SP

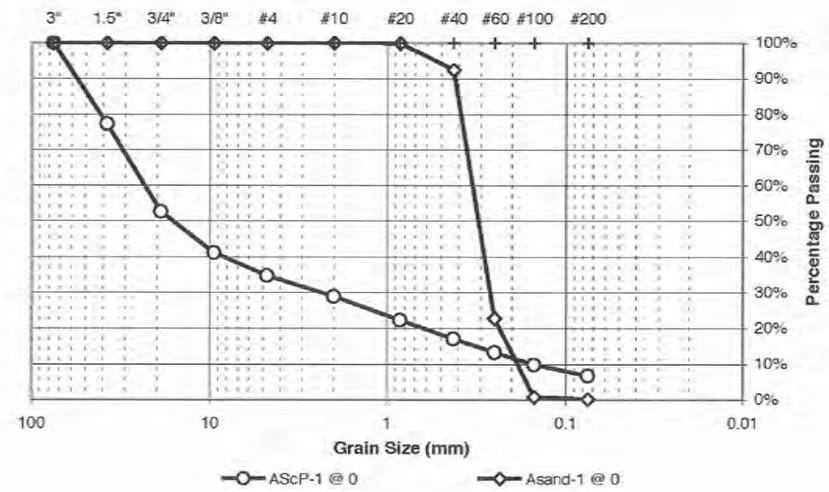

Duane Miller & Associates
Job No. 4086.055
March 2006

PARTICLE SIZE DATA
Atka Water Project
Atka, Alaska

Plate 7

1 G1.12 GEOTECHNICAL TEST HOLES

NOTE: FOR TEST HOLE LOCATIONS SEE SHEET G1.7

TP-4 LOG HOLE BY DUANE MILLER - JUNE 2006 SEE SHEET G1.8

AWTP-1 LOG HOLE BY DUANE MILLER - SEPT. 2005 - THIS SHEET

RECORD DRAWING CERTIFICATE
THESE DRAWINGS REFLECT RECORDED INFORMATION OBTAINED DURING CONSTRUCTION. INFORMATION PROVIDED HEREIN IS ACCURATE TO THE BEST OF MY KNOWLEDGE.
NAME DATE

SCALE:

CONSTRUCTION RECORD
FIELD BOOK
STAKING
FOREMAN
AS-BUILT
INSPECTOR

REVISION BY DATE

2009 WATER SYSTEM UPGRADES
GEOTECHNICAL INFORMATION
ATKA, ALASKA

CE2 ENGINEERS, INC.
PO BOX 232048 ANCHORAGE, AK 99523 PH: 907-349-1015 FAX: 907-349-1015

Project No. Date MAY 2010 Designed LAP Drawn DDR Approved LAP

Sheet No. G1.12

G:\ACAD\ATKA\2009 Water System Upgrades\G1.7_8-9-10-11-12-13 Geo Info.dwg, 5/3/2011 2:39:13 PM, Flash, LANIER MP C2050_LD520C PCL 6BLK WHIT.pc3

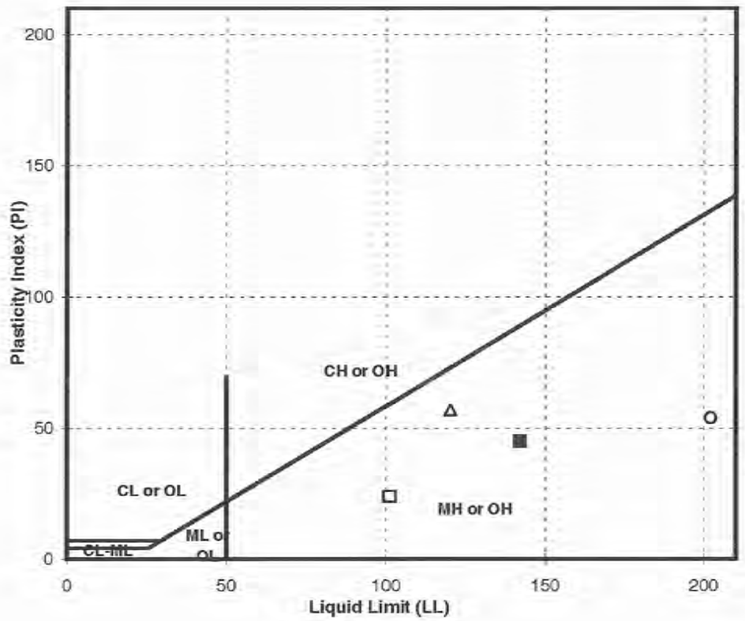

Sample Location	Plastic Limit	Liquid Limit	Plasticity Index	Natural Moisture Content	USCS
□ AWTP @ 5.0 ft	77	101	24	102.0%	MH
△ AWTP @ 6.5 ft	63	120	57	124.1%	MH
○ OAWT @ 4.0 ft	148	202	54	220.5%	MH
■ AIMP @ 3.5 ft	97	142	45	140.0%	MH

Duane Miller & Associates
Job No. 4086.055
March 2006

PLASTICITY CHART
Atka Water Project
Atka, Alaska

Plate
8

1 / G1.13 GEOTECHNICAL TEST HOLES

NOTE: FOR TEST HOLE LOCATIONS SEE SHEET G1.7

TP-4 LOG HOLE BY DUANE MILLER - JUNE 2008 SEE SHEET G1.8

AWTP-1 LOG HOLE BY DUANE MILLER - SEPT. 2005 - THIS SHEET

RECORD DRAWING CERTIFICATE
THESE DRAWINGS REFLECT RECORDED INFORMATION OBTAINED DURING CONSTRUCTION. INFORMATION PROVIDED HEREIN IS ACCURATE TO THE BEST OF MY KNOWLEDGE.
NAME DATE

SCALE: BAR IS ONE INCH ON ORIGINAL DRAWING. IF NOT ONE INCH ON THIS SHEET ADJUST SCALE ACCORDINGLY

CONSTRUCTION RECORD
FIELD BOOK
STAKING
FOREMAN
AS-BUILT
INSPECTOR

2009 WATER SYSTEM UPGRADES
GEOTECHNICAL INFORMATION
ATKA, ALASKA

CE2 ENGINEERS, INC.
PO BOX 220346 ANCHORAGE, AK 99503 PH: 907-349-1010 FAX: 907-349-1015

REVISION	BY	DATE

Project No. ___ Date MAY 2010 Designed LAP Drawn DDR Approved LAP

Sheet No. G1.13

G:\ACAD\ATKA\2009 Water System Upgrades\G1.7_8-9-10-11-12-13 Geo Info.dwg, 5/3/2011 2:39:00 PM, Flash, LANIER MP C2050_LD520C PCL 6BLK WHT.pc3

SITE CONTROL

Legal Description of

Atka Water Treatment Site

The purpose of this legal description is to describe a parcel to be used for a water treatment plat located in Atka, within Government Lot 1, Section 15, Township 92 South, Range 176 West, Seward Meridian, and more particularly described as follows:

Commencing at Corner 1, Lot 42, Atka ANCSA 14(c) Survey (recorded as Plat No. 2005-8, Aleutian Islands Recording District), a 3¼" brass cap monument, thence N81°56'14"E, 832.80 feet, to a point on the boundary of Lot 69, Atka ANCSA 14(c) Survey, and the **True Point of Beginning**; thence N32°45'40"E, 200.00 feet, to a point; thence S57°14'20"E, 240.00 feet, to a point; thence S32°45'40"W. 199.98 feet, to a point on the boundary of Lot 69; thence along the boundary of Lot 69, 130.19 feet along a curve to the left and having a radius of 5,045.38 feet and an angle of 1°28'43", to a point of tangency; thence continuing along the boundary of Lot 69, N57°38'43"W, 109.82 feet, to the **True Point of Beginning**, containing 47,868 square feet (1.10 acres), more or less, as shown on Exhibit "A", attached to and a part hereof.

STATE OF ALASKA 49TH MICHAEL E. MILLER LS 7222 REGISTERED PROFESSIONAL LAND SURVEYOR

Michael E. Miller
Registered Land Surveyor
LS 7222

Date

Exhibit "A" - Atka Water Treatment Site Page 1 of 2

EXHIBIT "A"

NOTES

1. THIS EXHIBIT MAP WAS PREPARED WITHOUT FIELD VERIFICATION OF THE RECORD DIMENSIONS FROM THE ATKA ANCSA 14(c) SURVEY, RECORDED AS PLAT No. 2005-8, ALEUTIAN ISLANDS RECORDING DISTRICT. THIS EXHIBIT MAP IS ONLY TEMPORARY AND WILL BE REPLACED AND SUPERCEDED ONCE A FIELD SURVEY HAS BEEN PERFORMED.

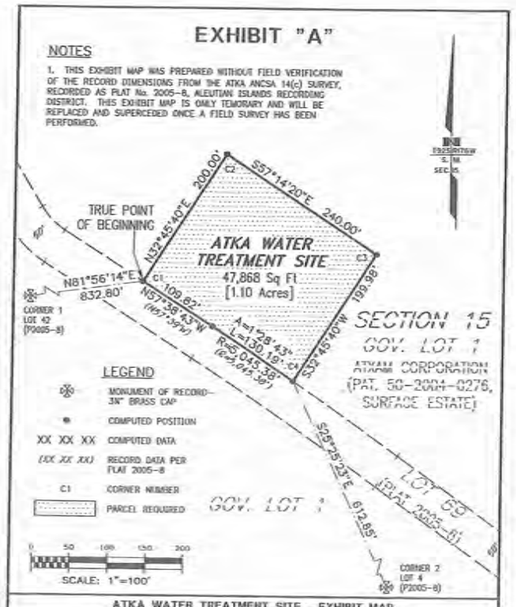

ATKA WATER TREATMENT SITE - EXHIBIT MAP

DWG:	LP10-311
PLOT:	1"=100'
GRID:	ATKA
SHEET:	2 of 2

PREPARED BY:
McCLINTOCK LAND ASSOCIATES, INC.
16942 N. EAGLE RIVER LP RD
EAGLE RIVER, AK 99577
907-694-4499

PREPARED FOR:
CE2 ENGINEERS, INC.
P.O. BOX 232946
ANCHORAGE, AK 99523
907-349-1010

RECORD DRAWING CERTIFICATE
THESE DRAWINGS REFLECT RECORDED INFORMATION OBTAINED DURING CONSTRUCTION. INFORMATION PROVIDED HEREIN IS ACCURATE TO THE BEST OF MY KNOWLEDGE.
NAME DATE

SCALE:

CONSTRUCTION RECORD
FIELD BOOK
STAKING
FOREMAN
AS-BUILT
INSPECTION

2009 WATER SYSTEM UPGRADES

SITE CONTROL

ATKA, ALASKA

CE2 ENGINEERS, INC.
PO BOX 232946 ANCHORAGE, AK 99523 PH: 907-349-1010 FAX: 907-349-1015

REVISION	BY	DATE

Project No.
Date MAY 2010
Designed LAP
Drawn LAW
Approved LAP

Sheet No.
G2.0

G:\ACAD\ATKA\2009 Water System Upgrades\G2.0 Survey Control.dwg, 5/4/2011 9:38:33 AM, Flash, LANIER MP C2050_LD520C PCL 6BLK WHT.pc3

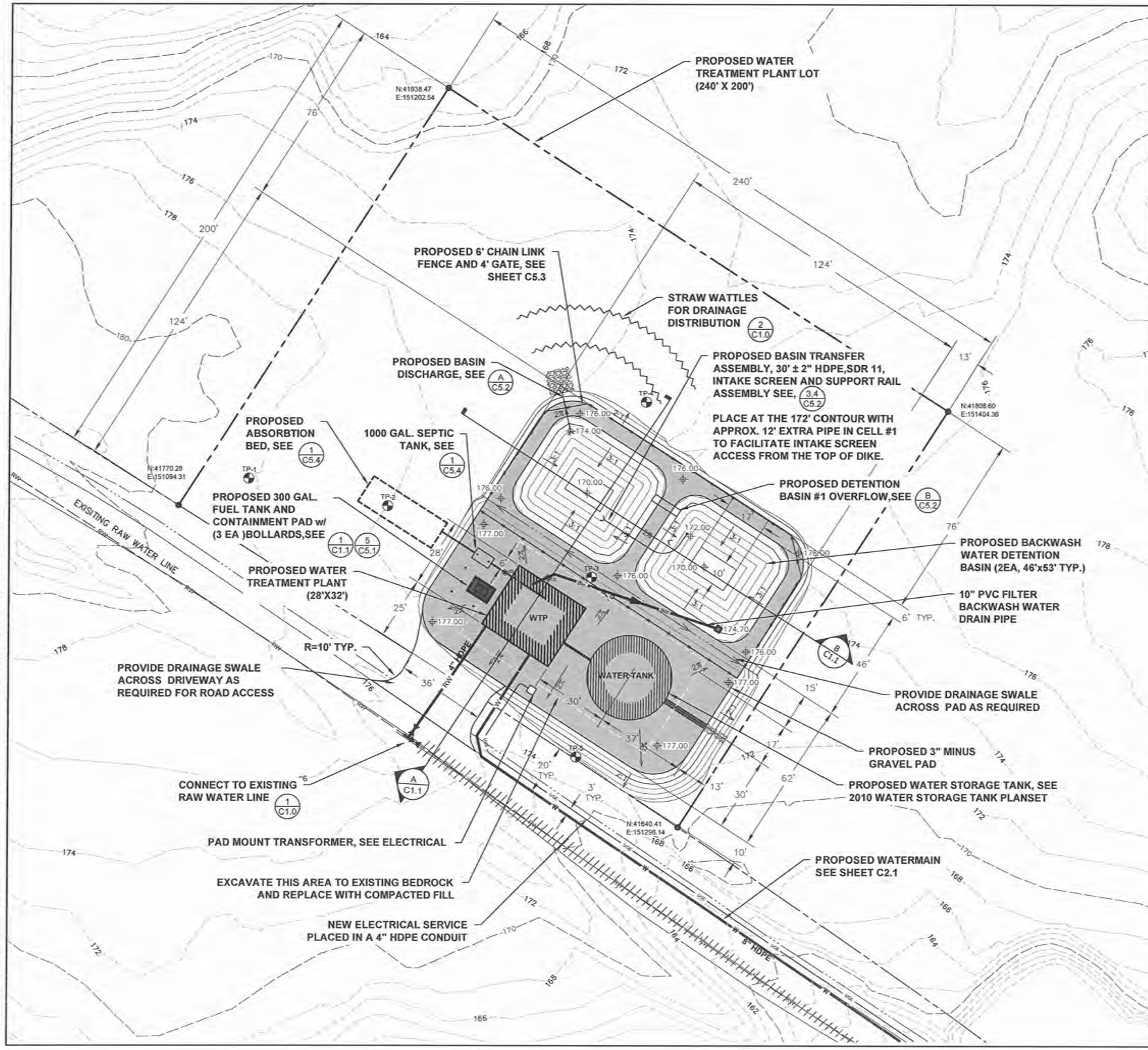

*NOTE

1. AFTER ACTIVATION OF NEW WATER TREATMENT PLANT, REMOVE THE SPECIFIED VALVE, INSTALL D.I. BLIND FLANGE AND 2CUBIC FOOT CONCRETE THRUST BLOCK.

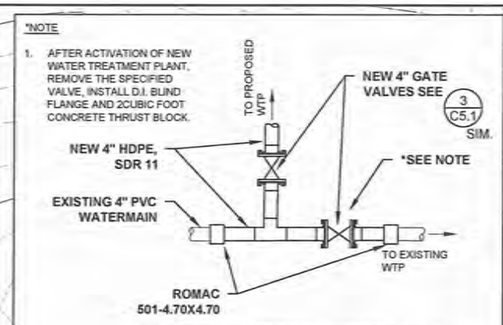

1 C1.0 RAW WATER CONNECTION
N.T.S.

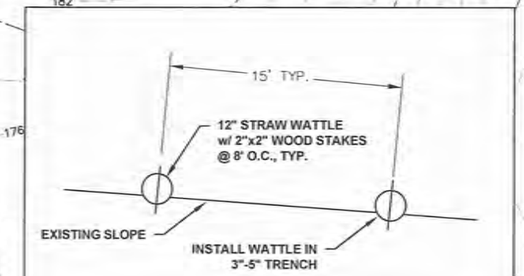

2 C1.0 STRAW WATTLE INSTALLATION - TYP.
N.T.S.

LEGEND

RW	PROPOSED RAW WATERLINE
W	PROPOSED WATERMAIN
BW	PROPOSED BACKWASH WATER DRAIN
	PROPOSED DITCHLINE
UGE	PROPOSED UNDERGROUND ELECTRIC
RW	EXISTING RAW WATER LINE
RW	EXISTING WATER LINE TO BE DEMO'ED OR ABANDONED IN PLACE
	PROPOSED FENCELINE

SHEET NOTE

1. EXISTING UTILITY LOCATIONS ARE APPROXIMATE. CONTRACTOR SHALL FIELD VERIFY LOCATIONS PRIOR TO CONSTRUCTION TO ACCOMMODATE ANY GRADE CHANGES REQUIRED.

RECORD DRAWING CERTIFICATE

THESE DRAWINGS REFLECT RECORDED INFORMATION OBTAINED DURING CONSTRUCTION. INFORMATION PROVIDED HEREIN IS ACCURATE TO THE BEST OF MY KNOWLEDGE.

NAME DATE

SCALE:

BAR IS ONE INCH ON ORIGINAL DRAWING

IF NOT ONE INCH ON THIS SHEET, ADJUST SCALES ACCORDINGLY

CONSTRUCTION RECORD

FIELD BOOK

STAKING

FOREMAN

AS-BUILT

INSPECTOR

STATE OF ALASKA 49TH REGISTERED PROFESSIONAL ENGINEER

2009 WATER SYSTEM UPGRADES

SITE PLAN
WATER TREATMENT SITE

ATKA, ALASKA

CE2 ENGINEERS, INC.
PO BOX 232946 ANCHORAGE, AK 99523 PH: 907-349-1010 FAX: 907-349-1015

REVISION	BY	DATE
ADDED SEWAGE HOLDING TANK	PW	1/21/11

Project No.
Date MAY 2010
Designed LAP
Drawn CM
Approved LAP

Sheet No.
C1.0

G:\ACAD\ATKA\2009 Water System Upgrades\C1.0 C1.1 WTP SITE PLAN.dwg, 5/3/2011 2:37:55 PM, Flash, LANIER MP C2050_LD520C PCL 6.pc3

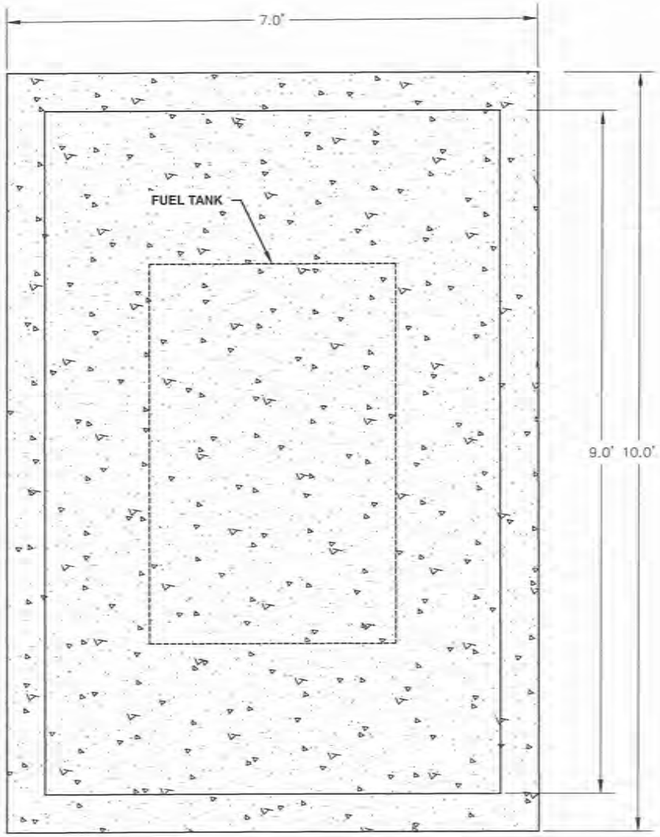

PLAN VIEW

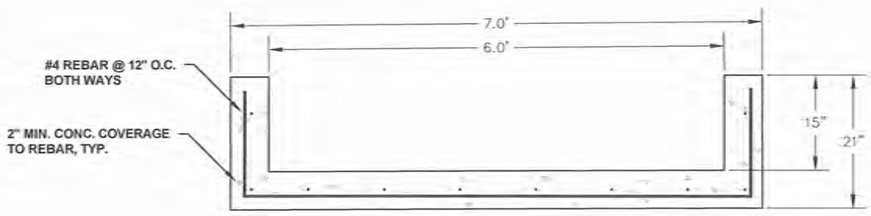

SECTION VIEW

1 / C1.1 FUEL CONTAINMENT SLAB
N.T.S.

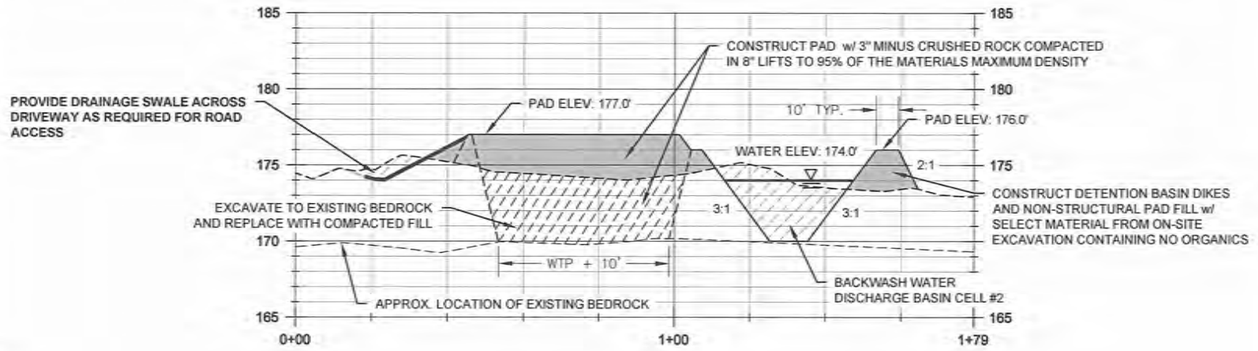

A WTP SITE - SECTION "A"
Scale: 1"=20' HORIZ. 1"=5' VERT.

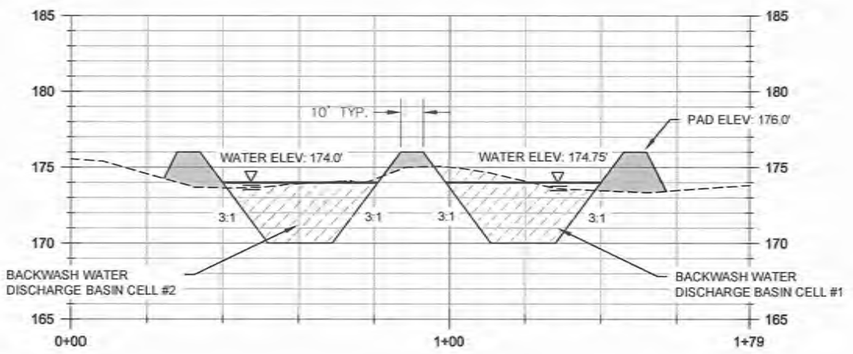

B WTP SITE - SECTION "B"
Scale: 1"=20' HORIZ. 1"=5' VERT.

RECORD DRAWING CERTIFICATE

THESE DRAWINGS REFLECT RECORDED INFORMATION OBTAINED DURING CONSTRUCTION. INFORMATION PROVIDED HEREIN IS ACCURATE TO THE BEST OF MY KNOWLEDGE.

NAME DATE

SCALE:

BAR IS ONE INCH ON ORIGINAL DRAWING. IF NOT ONE INCH ON THIS SHEET ADJUST SCALE ACCORDINGLY

CONSTRUCTION RECORD
FIELD BOOK
STAKING
FOREMAN
AS-BUILT
INSPECTOR

STATE OF ALASKA — 49TH — REGISTERED PROFESSIONAL ENGINEER — NO. CR 9607 — CHRISTOPHER MERRITT

2009 WATER SYSTEM UPGRADES

SECTIONS
WATER TREATMENT SITE

ATKA, ALASKA

CE2 ENGINEERS, INC.
PO BOX 220648 ANCHORAGE, AK 99522 PH: 907-349-1010 FAX: 907-349-1015

REVISION	BY	DATE

Project No. MAY 2010
Date
Designed LAP
Drawn CM
Approved LAP

Sheet No.
C1.1

G:\ACAD\ATKA\2009 Water System Upgrades\C1.0 C1.1 WTP SITE PLAN.dwg, 5/3/2011 2:37:21 PM, Flash, \\CE2MAIN\LANIER MP C2050/LD520C PCL 6

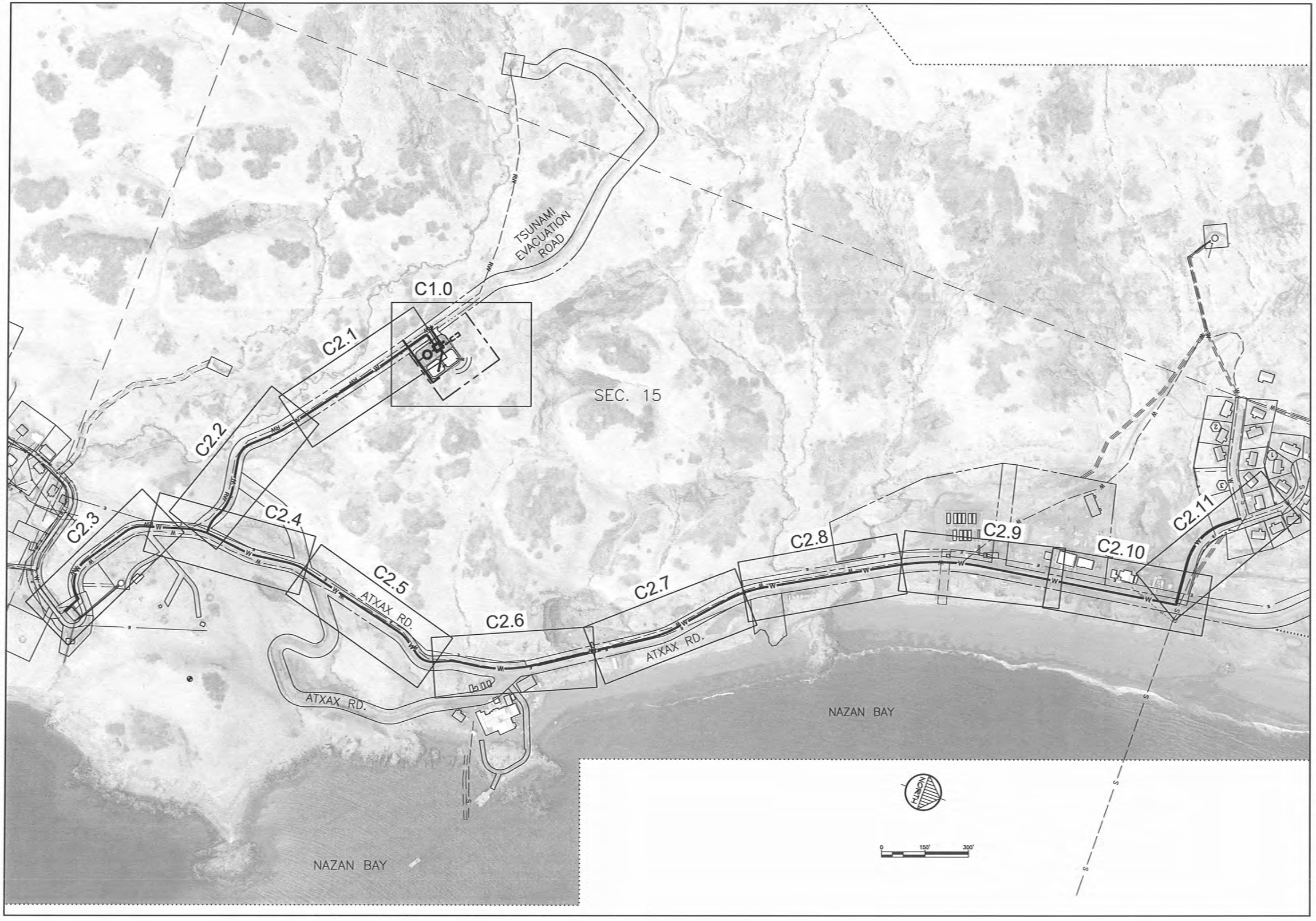

RECORD DRAWING CERTIFICATE

THESE DRAWINGS REFLECT RECORDED INFORMATION OBTAINED DURING CONSTRUCTION. INFORMATION PROVIDED HEREIN IS ACCURATE TO THE BEST OF MY KNOWLEDGE.

NAME DATE

SCALE:

BAR IS ONE INCH ON ORIGINAL DRAWING

0 1"

IF NOT ONE INCH ON THIS SHEET, ADJUST SCALES ACCORDINGLY

CONSTRUCTION RECORD

FIELD BOOK

STAKING

FOREMAN

AS-BUILT

INSPECTOR

STATE OF ALASKA 49TH Lloyd A. Perkins NO. CE 9692 REGISTERED PROFESSIONAL ENGINEER

2009 WATER SYSTEM UPGRADES

WATERMAIN IMPROV. INDEX SHEET

ATKA, ALASKA

CE2 ENGINEERS, INC.

PO BOX 22946 ANCHORAGE, AK 99523 PH: 907-349-1010 FAX: 907-349-1015

REVISION	BY	DATE

Project No.

Date MAY 2010

Designed LAP

Drawn CM

Approved LAP

Sheet No.

C2.0

G:\ACAD\ATKA\2009 Water System Upgrades\C2.0 WATER PLAN & PROFILE.dwg, 5/3/2011 2:31:22 PM, Flash, LANIER MP C2050_LD520C PCL 6BLK WHIT.pc3

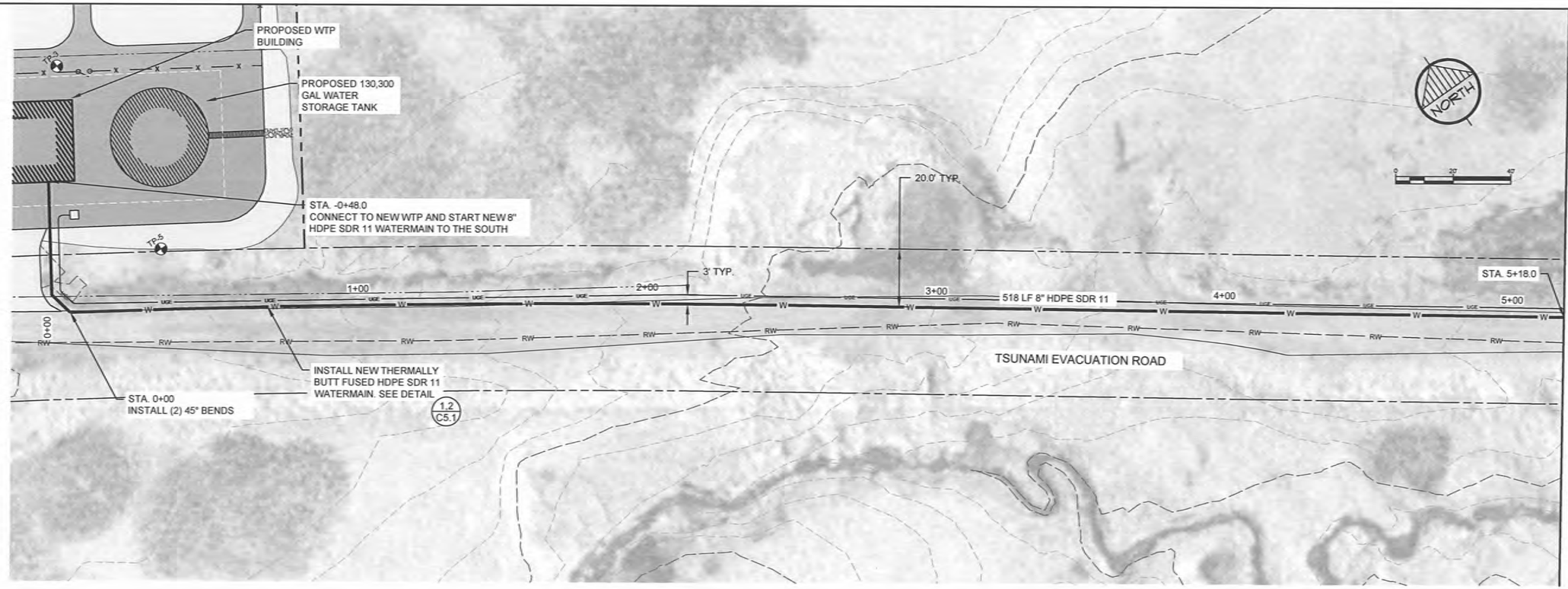

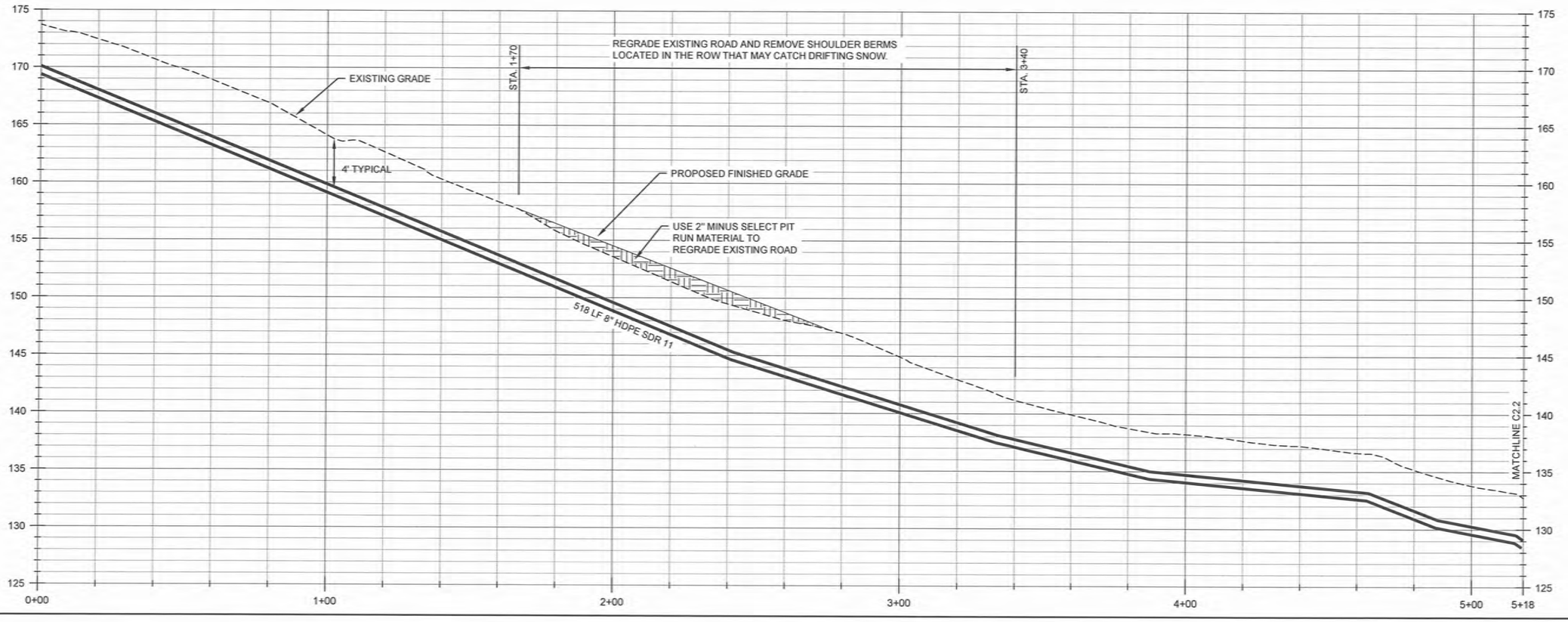

RECORD DRAWING CERTIFICATE

THESE DRAWINGS REFLECT RECORDED INFORMATION OBTAINED DURING CONSTRUCTION. INFORMATION PROVIDED HEREIN IS ACCURATE TO THE BEST OF MY KNOWLEDGE.

NAME DATE

SCALE:

BAR IS ONE INCH ON ORIGINAL DRAWING

0 1"

IF NOT ONE INCH ON THIS SHEET, ADJUST SCALES ACCORDINGLY

CONSTRUCTION RECORD

FIELD BOOK

STAKING

FOREMAN

AS-BUILT

INSPECTOR

STATE OF ALASKA

2009 WATER SYSTEM UPGRADES

PLAN AND PROFILE

ATKA, ALASKA

CE2 ENGINEERS, INC.

PO BOX 232948 ANCHORAGE, AK 99523 PH: 907-349-1010 FAX: 907-349-1015

REVISION	BY	DATE

Project No.

Date MAY 2010

Designed LAP

Drawn CM

Approved LAP

Sheet No.

C2.1

G:\ACAD\ATKA\2009 Water System Upgrades\C2.1-C2.2 PLAN PROFILE.dwg, 2/16/2011 1:16:41 PM, Flash, LANIER MP C2050_LD520C PCL 6BLK WHIT.pc3

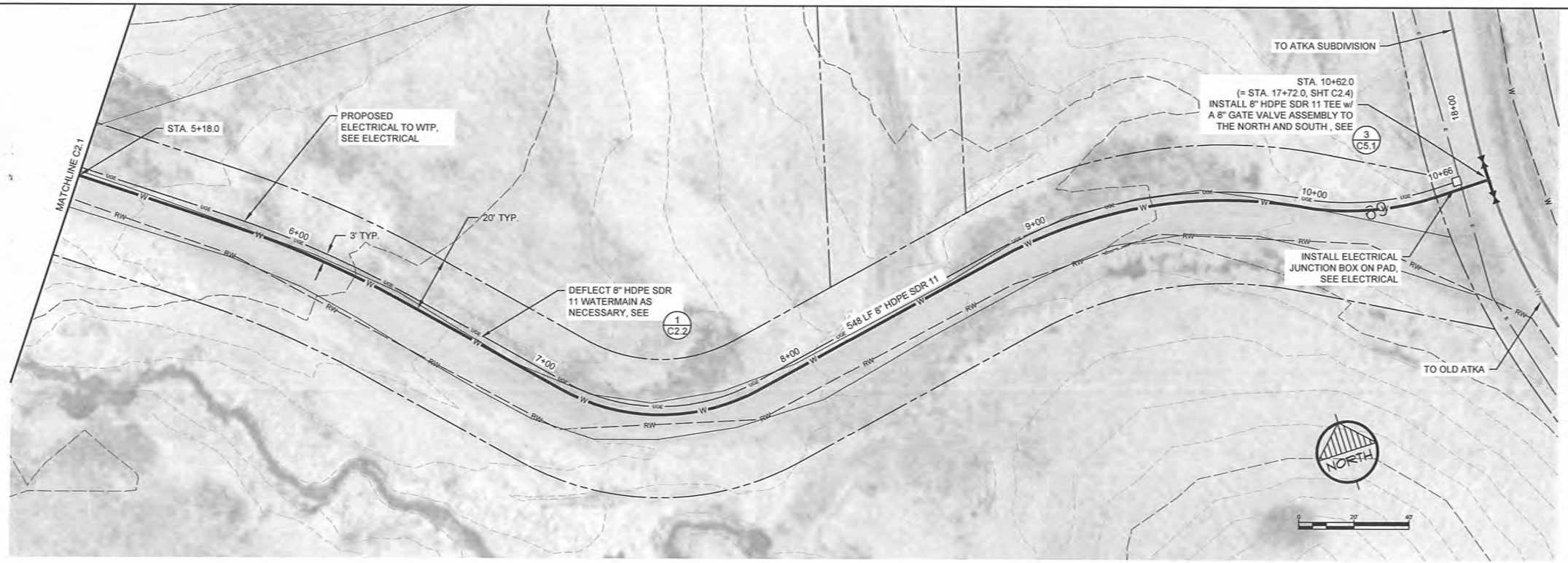

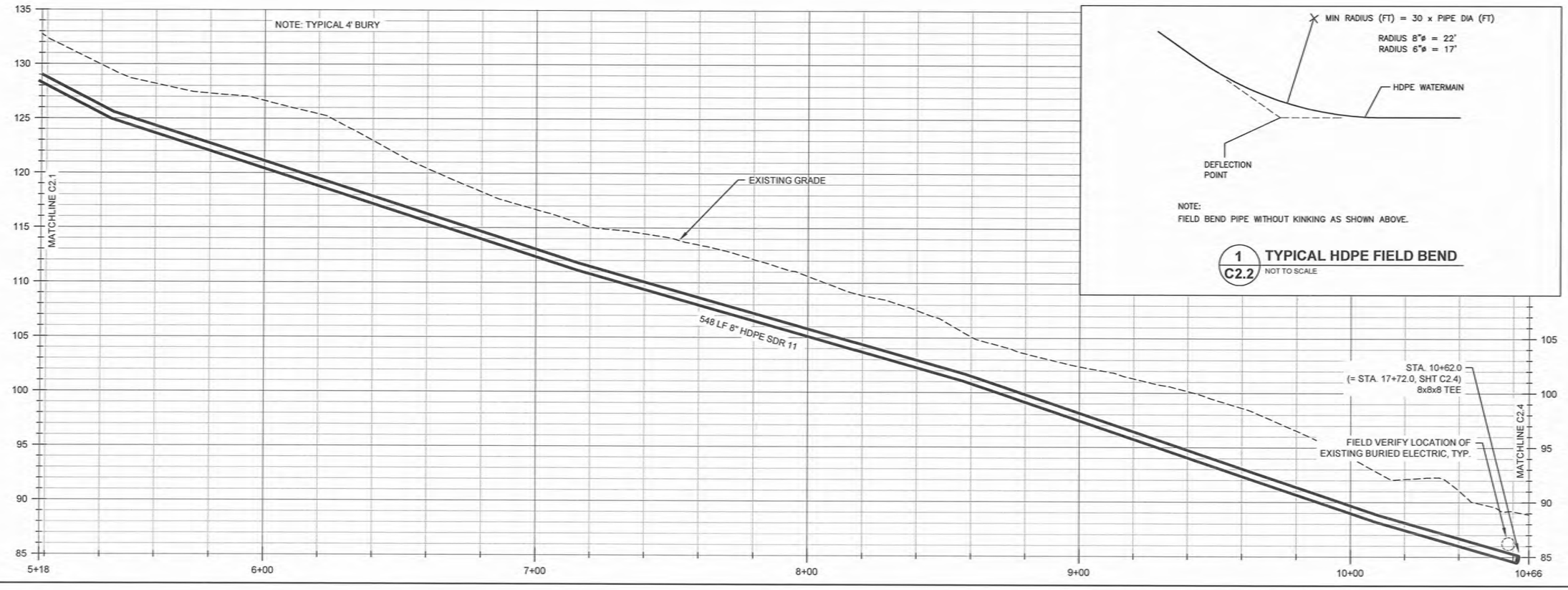

1 C2.2 TYPICAL HDPE FIELD BEND
NOT TO SCALE

RECORD DRAWING CERTIFICATE
THESE DRAWINGS REFLECT RECORDED INFORMATION OBTAINED DURING CONSTRUCTION. INFORMATION PROVIDED HEREIN IS ACCURATE TO THE BEST OF MY KNOWLEDGE.
NAME _____ DATE _____

SCALE:
IF NOT ONE INCH ON THIS SHEET ADJUST SCALES ACCORDINGLY

CONSTRUCTION RECORD
FIELD BOOK
STAKING
FOREMAN
AS-BUILT
INSPECTOR

STATE OF ALASKA — REGISTERED PROFESSIONAL ENGINEER — Chad M. Mercer — NO. CP 9999

2009 WATER SYSTEM UPGRADES

PLAN AND PROFILE

ATKA, ALASKA

CE2 ENGINEERS, INC.
PO BOX 220946 ANCHORAGE, AK 99523 PH: 907-349-1015 FAX: 907-349-1015

REVISION	BY	DATE

Project No. ____ Date MAY 2010
Designed LAP
Drawn CM
Approved LAP

Sheet No.
C2.2

G:\ACAD\ATKA\2009 Water System Upgrades\C2.1-C2.2 PLAN PROFILE.dwg, 1/31/2011 3:54:08 PM, cmerz, LANIER MP C2050_LD520C PCL 6.pc3

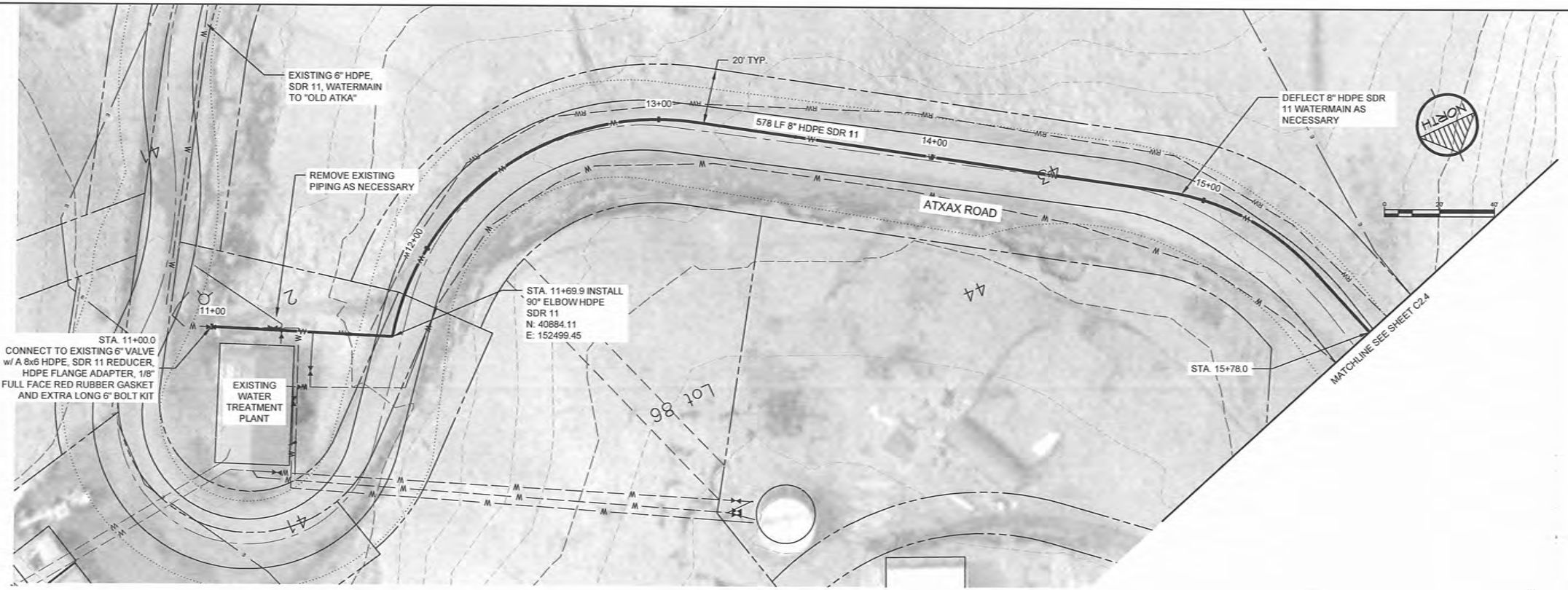

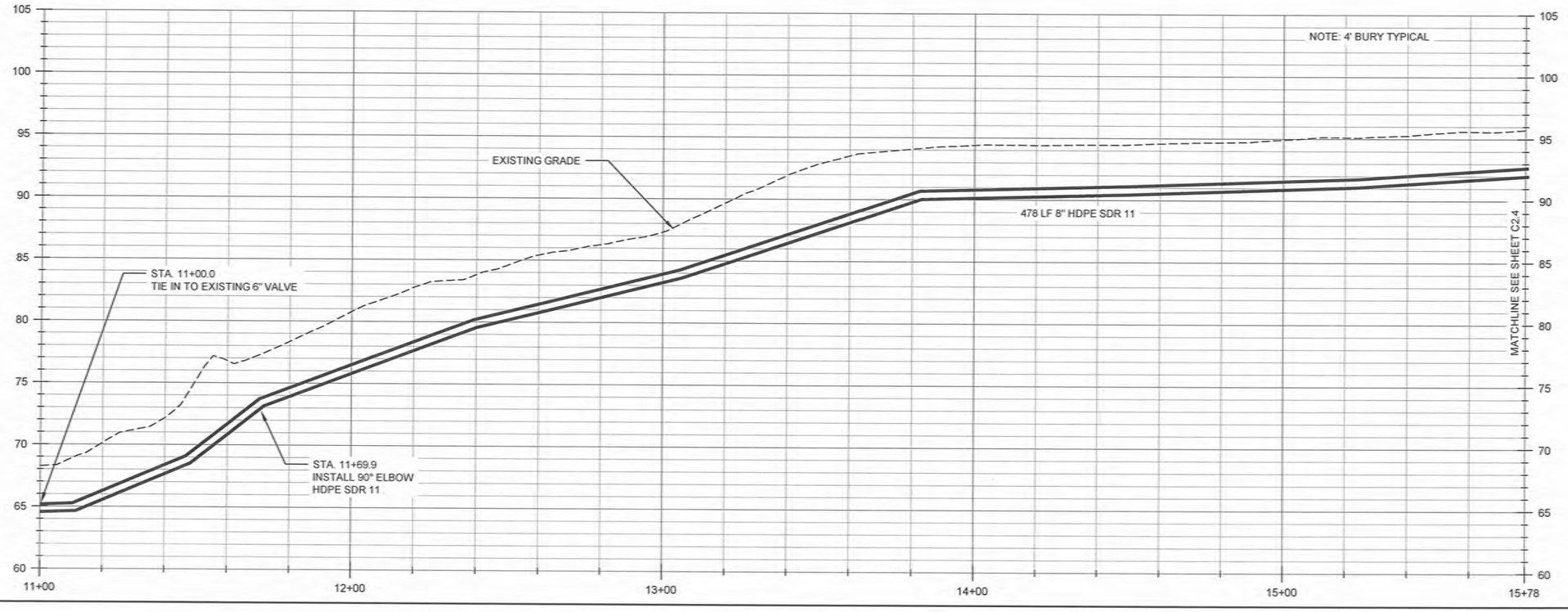

RECORD DRAWING CERTIFICATE
THESE DRAWINGS REFLECT RECORDED INFORMATION OBTAINED DURING CONSTRUCTION. INFORMATION PROVIDED HEREIN IS ACCURATE TO THE BEST OF MY KNOWLEDGE.
NAME
DATE

SCALE:
BAR IS ONE INCH ON ORIGINAL DRAWING
IF NOT ONE INCH ON THIS SHEET ADJUST SCALES ACCORDINGLY

CONSTRUCTION RECORD
FIELD BOOK
STAKING
FOREMAN
AS-BUILT
INSPECTOR

2009 WATER SYSTEM UPGRADES

PLAN AND PROFILE

ATKA, ALASKA

ENGINEERS, INC.
PO BOX 223946 ANCHORAGE, AK 99523 PH: 907-349-1010 FAX: 907-349-1015

REVISION	BY	DATE

Project No. —
Date MAY 2010
Designed LAP
Drawn CM
Approved LAP

Sheet No.
C2.3

G:\ACADVATKA\2009 Water System Upgrades\C2.3-C2.11 PLAN PROFILE.dwg, 2/20/2011 9:08:18 AM, Flash, LANIER MP C2050_LD520C PCL 6BLK WHITE.pc3

G:\ACAD\ATKA\2009 Water System Upgrades\C2.3-C2.11 PLAN PROFILE.dwg, 2/20/2011 9:36:28 AM, Flash, LANIER MP C2050_LD520C PCL 6BLK WHIT.pc3

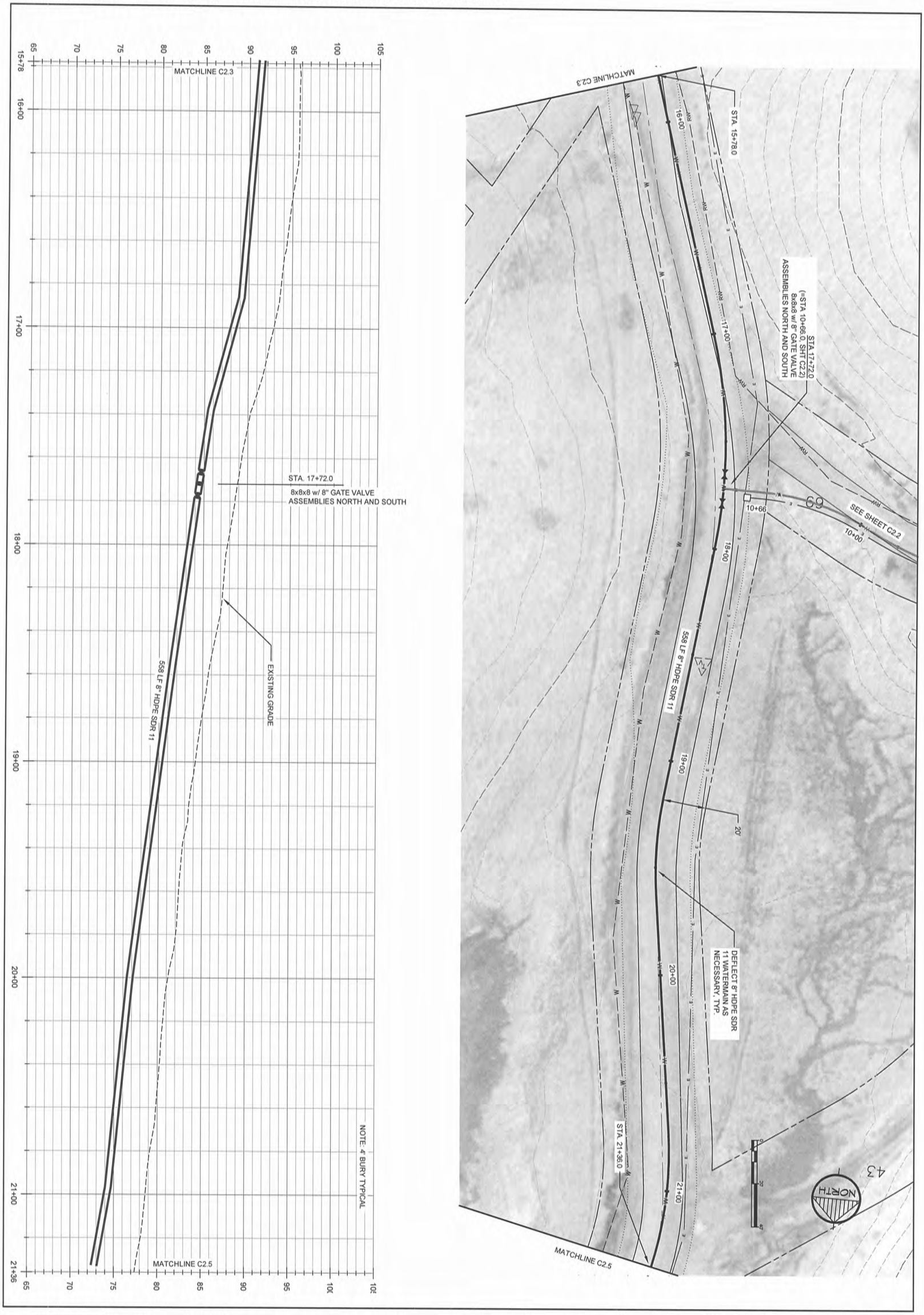

Sheet No.	Project No.	Date	Designed	Drawn	Approved
C2.4		MAY 2010	LAP	CM	LAP

REVISION	BY	DATE

CE2 ENGINEERS, INC.
PO BOX 232946 ANCHORAGE, AK 99523 PH: 907-349-1010 FAX: 907-349-1015

2009 WATER SYSTEM UPGRADES

PLAN AND PROFILE

ATKA, ALASKA

STATE OF ALASKA
Lloyd A. Penson
PROFESSIONAL ENGINEER

CONSTRUCTION RECORD
FIELD BOOK
STAKING
FOREMAN
AS-BUILT
INSPECTOR

SCALE:

BAR IS ONE INCH ON ORIGINAL DRAWING

IF NOT ONE INCH ON THIS SHEET, ADJUST SCALES ACCORDINGLY

RECORD DRAWING CERTIFICATE

THESE DRAWINGS REFLECT RECORDED INFORMATION OBTAINED DURING CONSTRUCTION. INFORMATION PROVIDED HEREIN IS ACCURATE TO THE BEST OF MY KNOWLEDGE.

NAME DATE

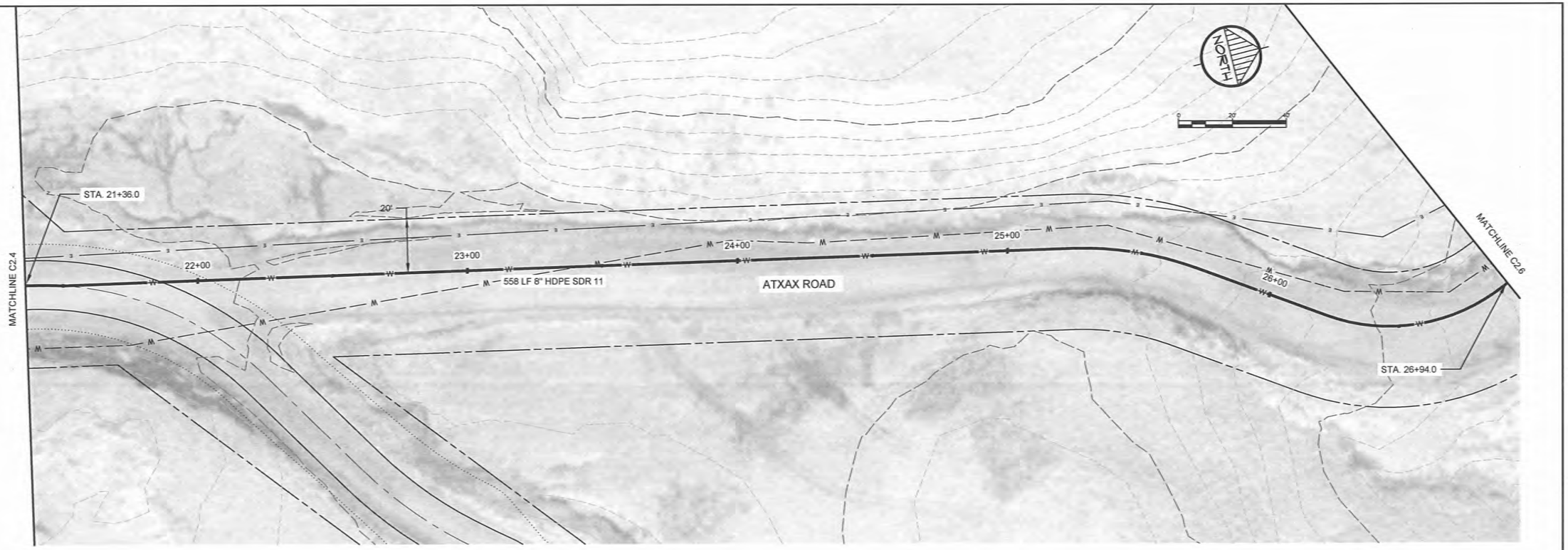

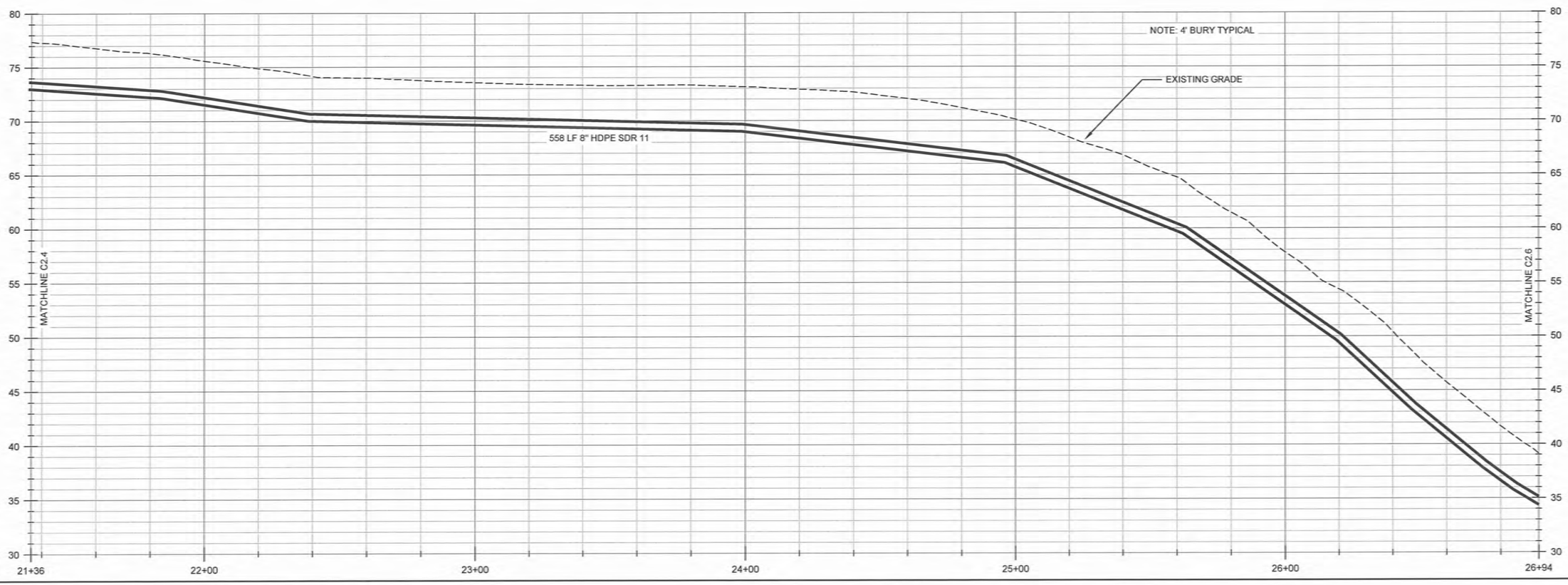

RECORD DRAWING CERTIFICATE

THESE DRAWINGS REFLECT RECORDED INFORMATION OBTAINED DURING CONSTRUCTION. INFORMATION PROVIDED HEREIN IS ACCURATE TO THE BEST OF MY KNOWLEDGE.

NAME DATE

SCALE:

BAR IS ONE INCH ON ORIGINAL DRAWING

IF NOT ONE INCH ON THIS SHEET, ADJUST SCALES ACCORDINGLY

CONSTRUCTION RECORD

FIELD BOOK

STAKING

FOREMAN

AS-BUILT

INSPECTOR

STATE OF ALASKA 49TH Lloyd A. Penson NO. CE 9820 REGISTERED PROFESSIONAL ENGINEER

2009 WATER SYSTEM UPGRADES

PLAN AND PROFILE

ATKA, ALASKA

CE2 ENGINEERS, INC.

PO BOX 232946 ANCHORAGE, AK 99523 PH: 907-349-1010 FAX: 907-349-1015

REVISION	BY	DATE

Project No.

Date MAY 2010

Designed LAP

Drawn CM

Approved LAP

Sheet No.

C2.5

G:\ACAD\ATKA\2009 Water System Upgrades\C2.3-C2.11 PLAN PROFILE.dwg, 5/3/2011 2:29:45 PM, Flash, LANIER MP C2050_LD520C PCL 6BLK WHIT.pc3

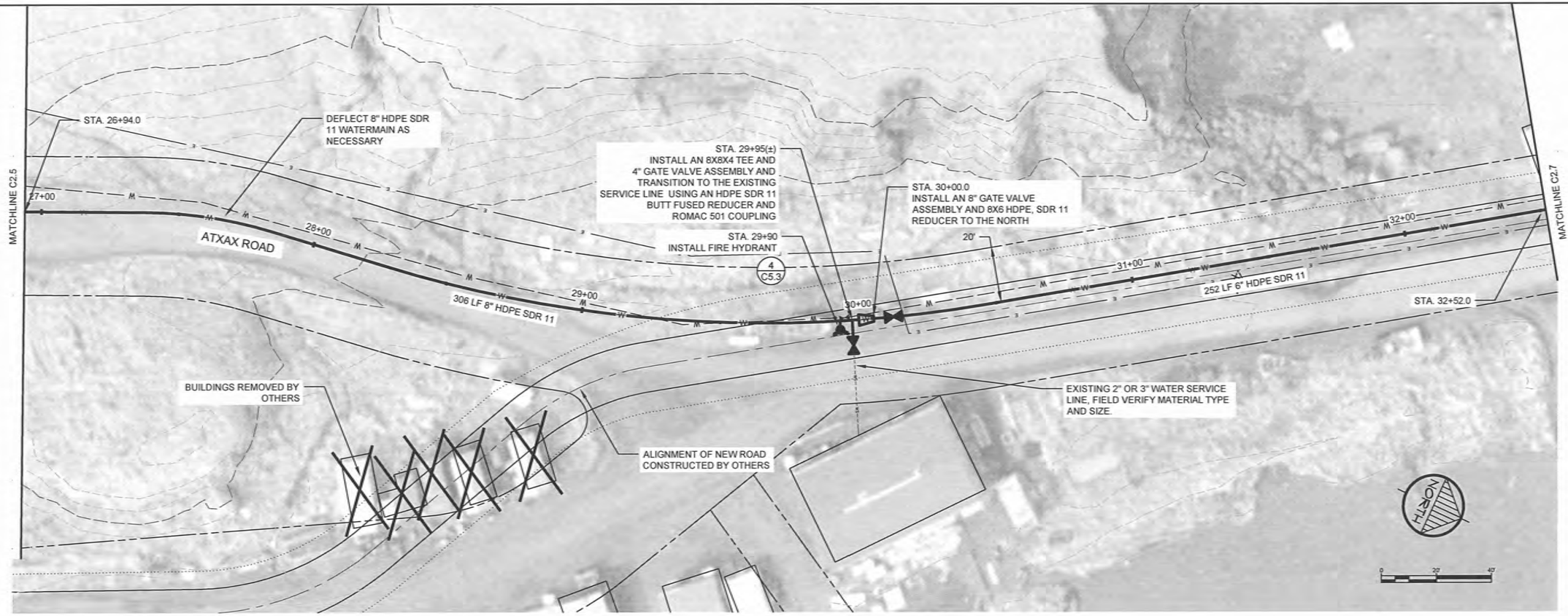

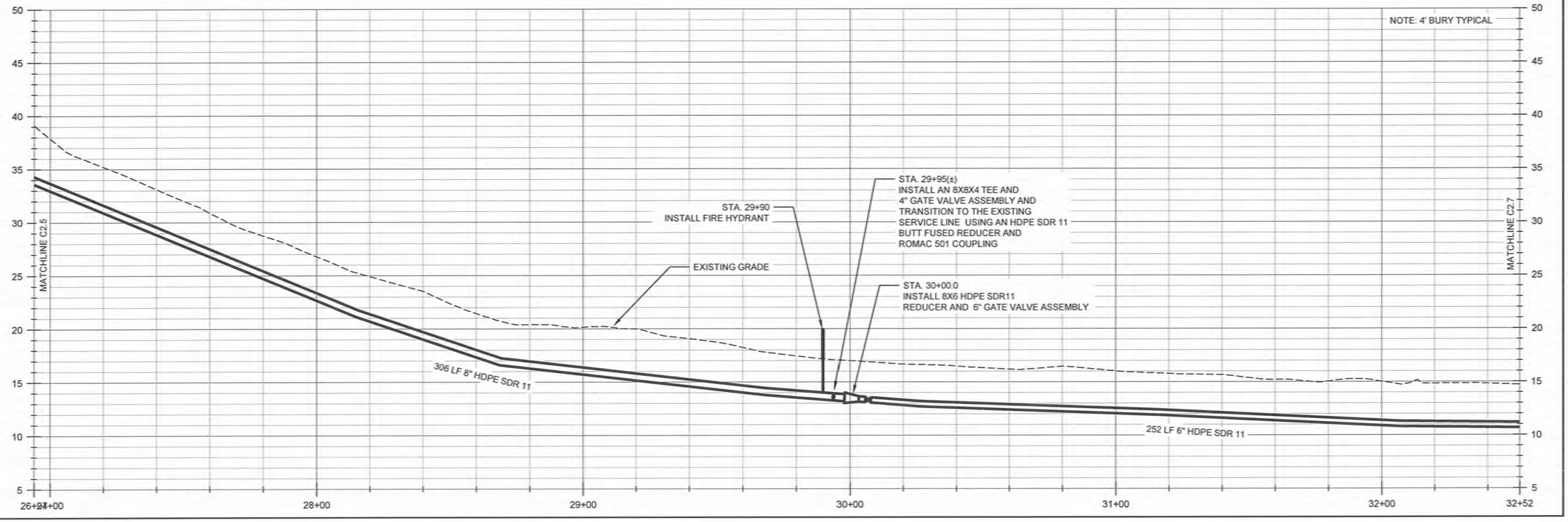

RECORD DRAWING CERTIFICATE

THESE DRAWINGS REFLECT RECORDED INFORMATION OBTAINED DURING CONSTRUCTION. INFORMATION PROVIDED HEREIN IS ACCURATE TO THE BEST OF MY KNOWLEDGE.

NAME DATE

SCALE:

BAR IS ONE INCH ON ORIGINAL DRAWING

0 1"

IF NOT ONE INCH ON THIS SHEET, ADJUST SCALES ACCORDINGLY

CONSTRUCTION RECORD

FIELD BOOK

STAKING

FOREMAN

AS-BUILT

INSPECTOR

STATE OF ALASKA 49TH

Lloyd A. Pierson

REGISTERED PROFESSIONAL ENGINEER

2009 WATER SYSTEM UPGRADES

PLAN AND PROFILE

ATKA, ALASKA

CE2 ENGINEERS, INC.

PO BOX 232946 ANCHORAGE, AK 99523 PH: 907-349-1010 FAX: 907-349-1015

REVISION	BY	DATE

Project No.

Date MAY 2010

Designed LAP

Drawn CM

Approved LAP

Sheet No.

C2.6

G:\ACAD\ATKA\2009 Water System Upgrades\C2.3-C2.11 PLAN PROFILE.dwg, 5/3/2011 2:28:54 PM, Flash, LANIER MP C2050_LD520C PCL 6BLK WHIT.pc3

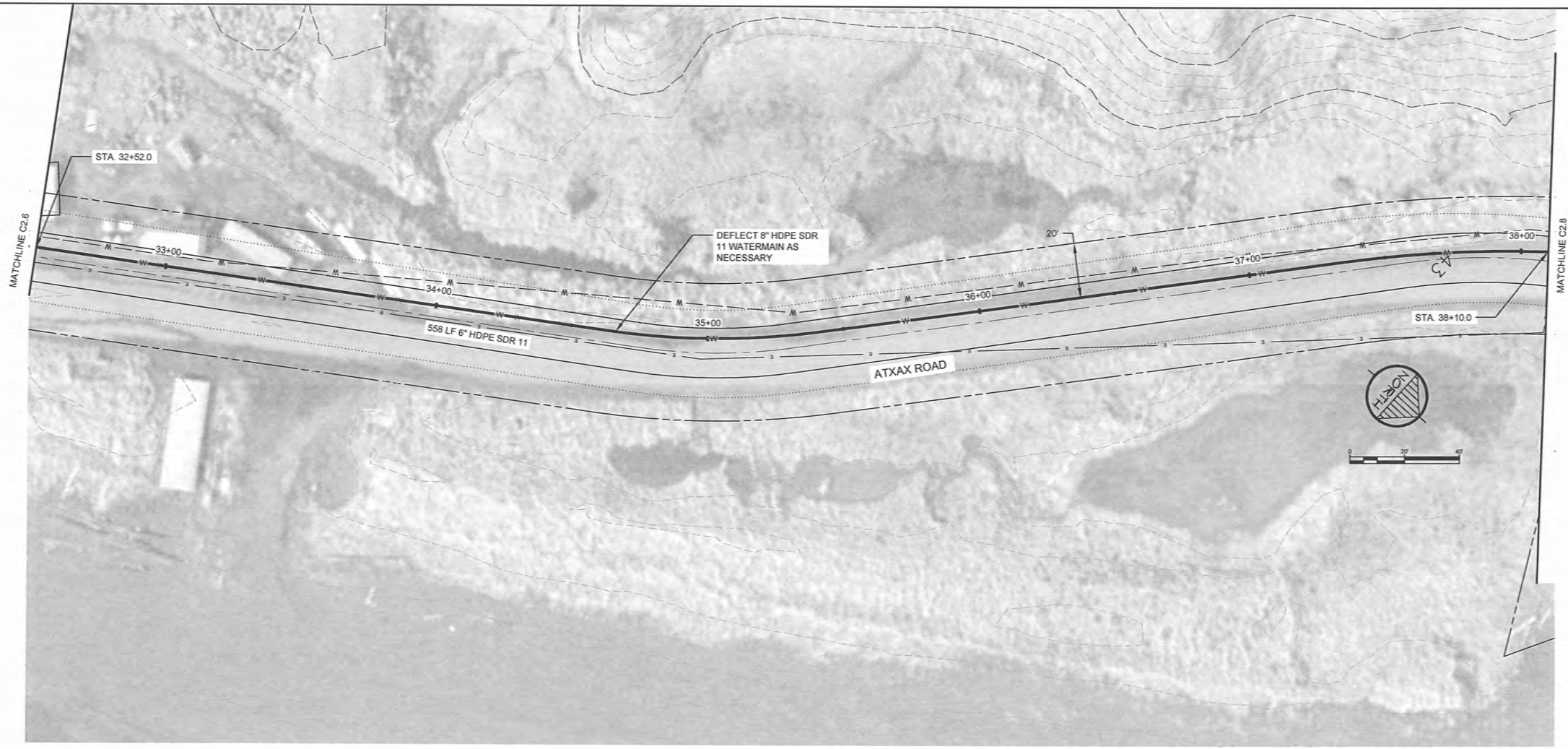

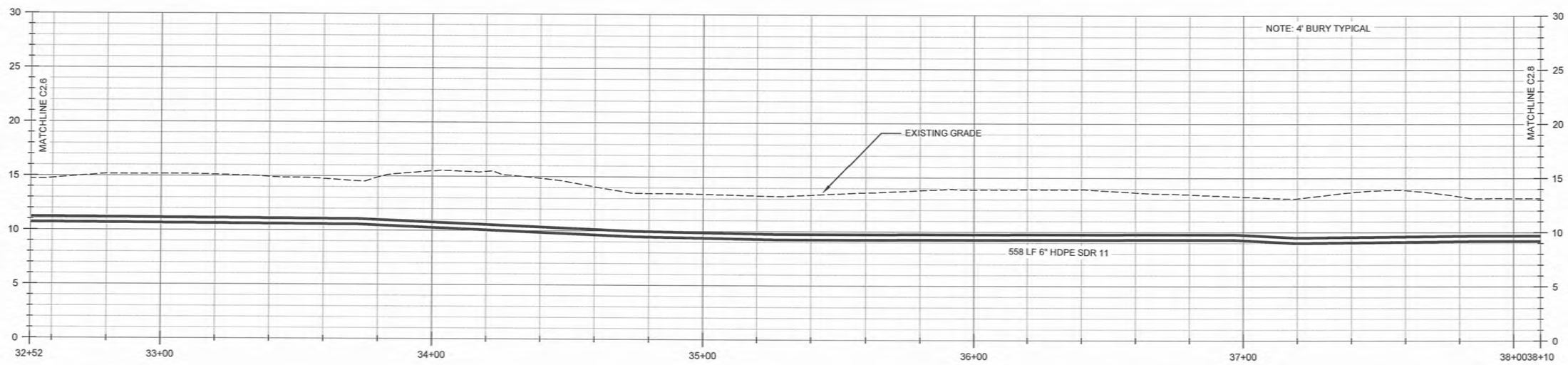

RECORD DRAWING CERTIFICATE

THESE DRAWINGS REFLECT RECORDED INFORMATION OBTAINED DURING CONSTRUCTION. INFORMATION PROVIDED HEREIN IS ACCURATE TO THE BEST OF MY KNOWLEDGE.

NAME _____ DATE _____

SCALE:

BAR IS ONE INCH ON ORIGINAL DRAWING

0 1"

IF NOT ONE INCH ON THIS SHEET, ADJUST SCALE ACCORDINGLY

CONSTRUCTION RECORD

FIELD BOOK

STAKING

FOREMAN

AS-BUILT

INSPECTOR

STATE OF ALASKA — REGISTERED — David A. Hanson — 9231 — 31 DEC 2010

2009 WATER SYSTEM UPGRADES

PLAN AND PROFILE

ATKA, ALASKA

CE2 ENGINEERS, INC.
PO BOX 232046 ANCHORAGE, AK 99523 PH: 907-349-1010 FAX: 907-349-1015

REVISION	BY	DATE

Project No. _____

Date MAY 2010

Designed LAP

Drawn CM

Approved LAP

Sheet No.

C2.7

G:\ACAD\ATKA\2009 Water System Upgrades\C2.3-C2.11 PLAN PROFILE.dwg, 2/20/2011 9:40:47 AM, Flash, LANIER MP C2050_LD520C PCL 6BLK WHITE.pc3

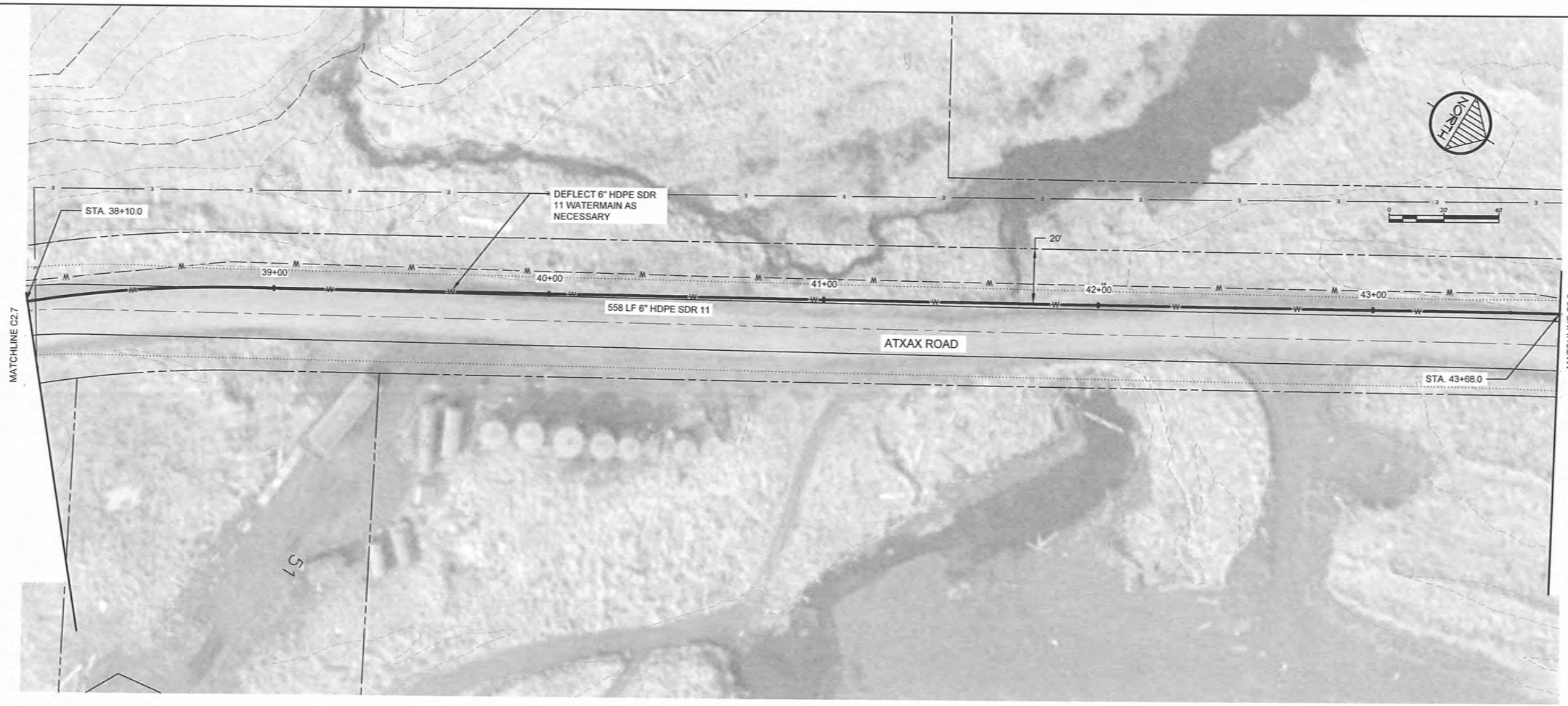

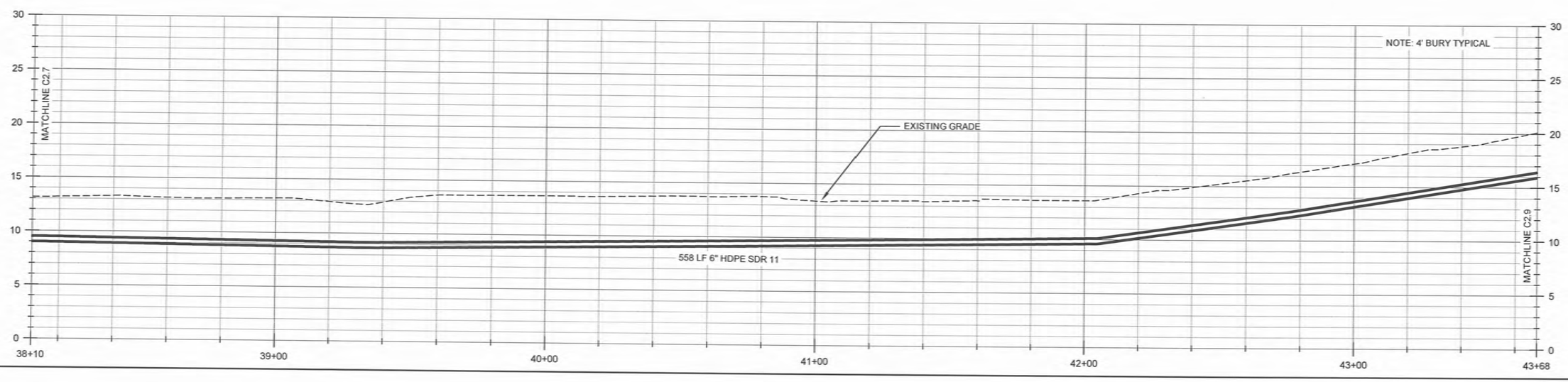

RECORD DRAWING CERTIFICATE

THESE DRAWINGS REFLECT RECORDED INFORMATION OBTAINED DURING CONSTRUCTION. INFORMATION PROVIDED HEREIN IS ACCURATE TO THE BEST OF MY KNOWLEDGE.

NAME DATE

SCALE:

BAR IS ONE INCH ON ORIGINAL DRAWING

IF NOT ONE INCH ON THIS SHEET, ADJUST SCALES ACCORDINGLY

CONSTRUCTION RECORD

FIELD BOOK

STAKING

FOREMAN

AS-BUILT

INSPECTOR

STATE OF ALASKA 49TH

Lloyd A. Peterson NO. CE 6662 REGISTERED PROFESSIONAL ENGINEER

2009 WATER SYSTEM UPGRADES

PLAN AND PROFILE

ATKA, ALASKA

CE2 ENGINEERS, INC.

PO BOX 223946 ANCHORAGE, AK 99523 PH: 907-349-1010 FAX: 907-349-1015

REVISION	BY	DATE

Project No.

Date MAY 2010

Designed LAP

Drawn CM

Approved LAP

Sheet No. C2.8

G:\ACAD\ATKA\2009 Water System Upgrades\C2.3-C2.11 PLAN PROFILE.dwg, 2/20/2011 9:43:13 AM, Flash, LANIER MP C2050_LD520C PCL 6BLK WHIT.pc3

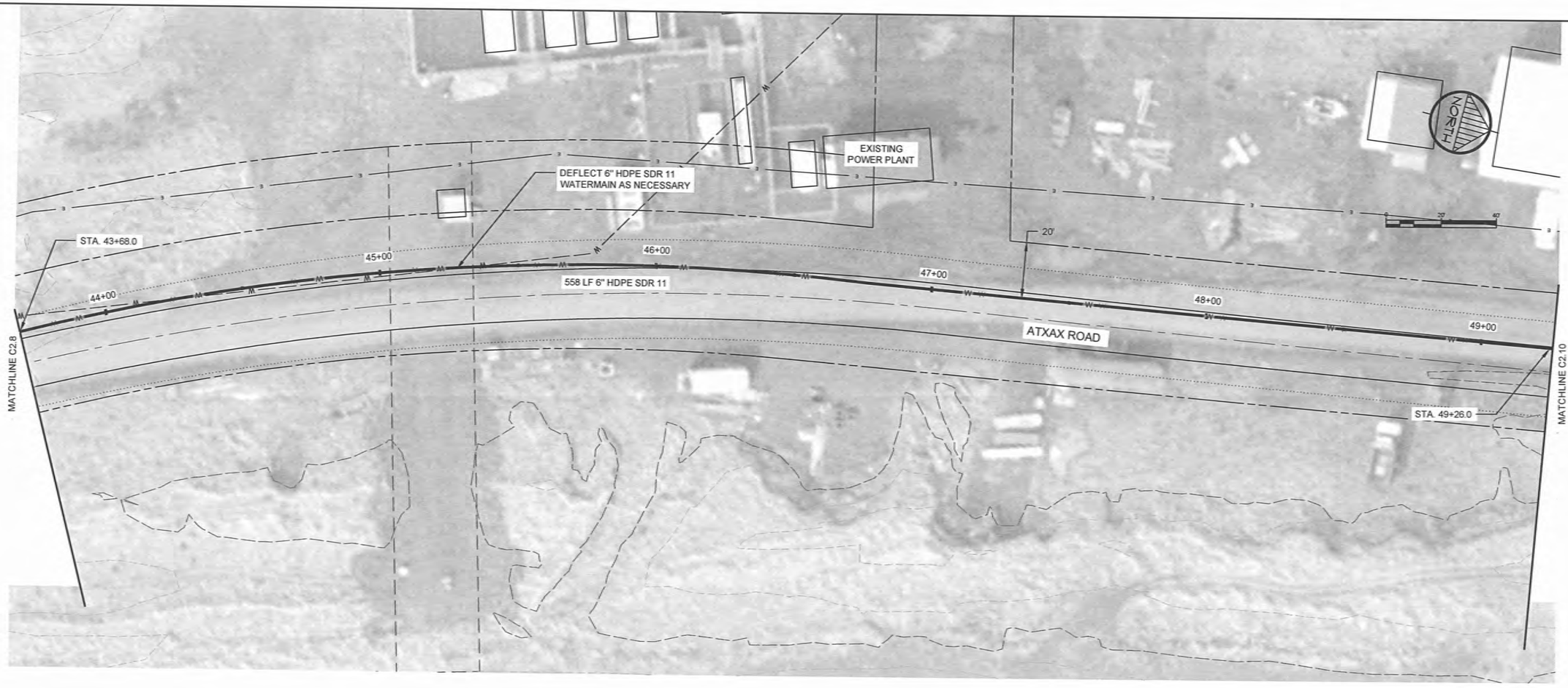

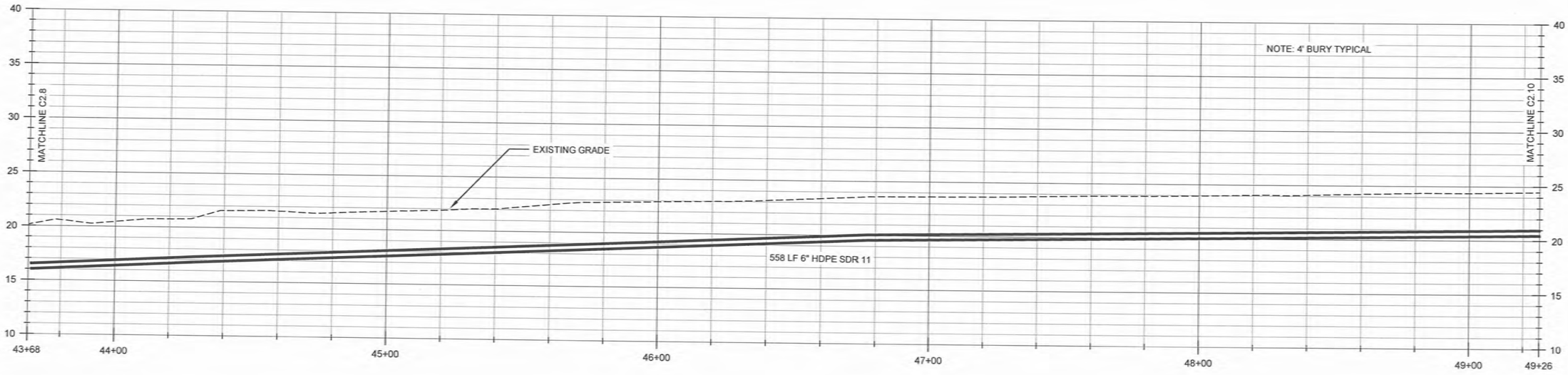

RECORD DRAWING CERTIFICATE

THESE DRAWINGS REFLECT RECORDED INFORMATION OBTAINED DURING CONSTRUCTION. INFORMATION PROVIDED HEREIN IS ACCURATE TO THE BEST OF MY KNOWLEDGE.

NAME _____ DATE _____

SCALE:

BAR IS ONE INCH ON ORIGINAL DRAWING

0 1"

IF NOT ONE INCH ON THIS SHEET, ADJUST SCALES ACCORDINGLY

CONSTRUCTION RECORD

FIELD BOOK

STAKING

FOREMAN

AS-BUILT

INSPECTOR

REGISTERED PROFESSIONAL ENGINEER — STATE OF ALASKA — CHRISTOPHER MOORE — 10246 — 2/20/11

2009 WATER SYSTEM UPGRADES

PLAN AND PROFILE

ATKA, ALASKA

CE2 ENGINEERS, INC.
PO BOX 220946 ANCHORAGE, AK 99523 PH: 907-346-1010 FAX: 907-346-1015

REVISION	BY	DATE

Project No. ____ Date MAY 2010 Designed LAP Drawn CM Approved LAP

Sheet No. C2.9

G:\ACAD\ATKA\2009 Water System Upgrades\C2.3-C2.11 PLAN PROFILE.dwg, 2/20/2011 9:58:27 AM, Flash, LANIER MP C2050_LD520C PCL 6BLK WHIT.pc3

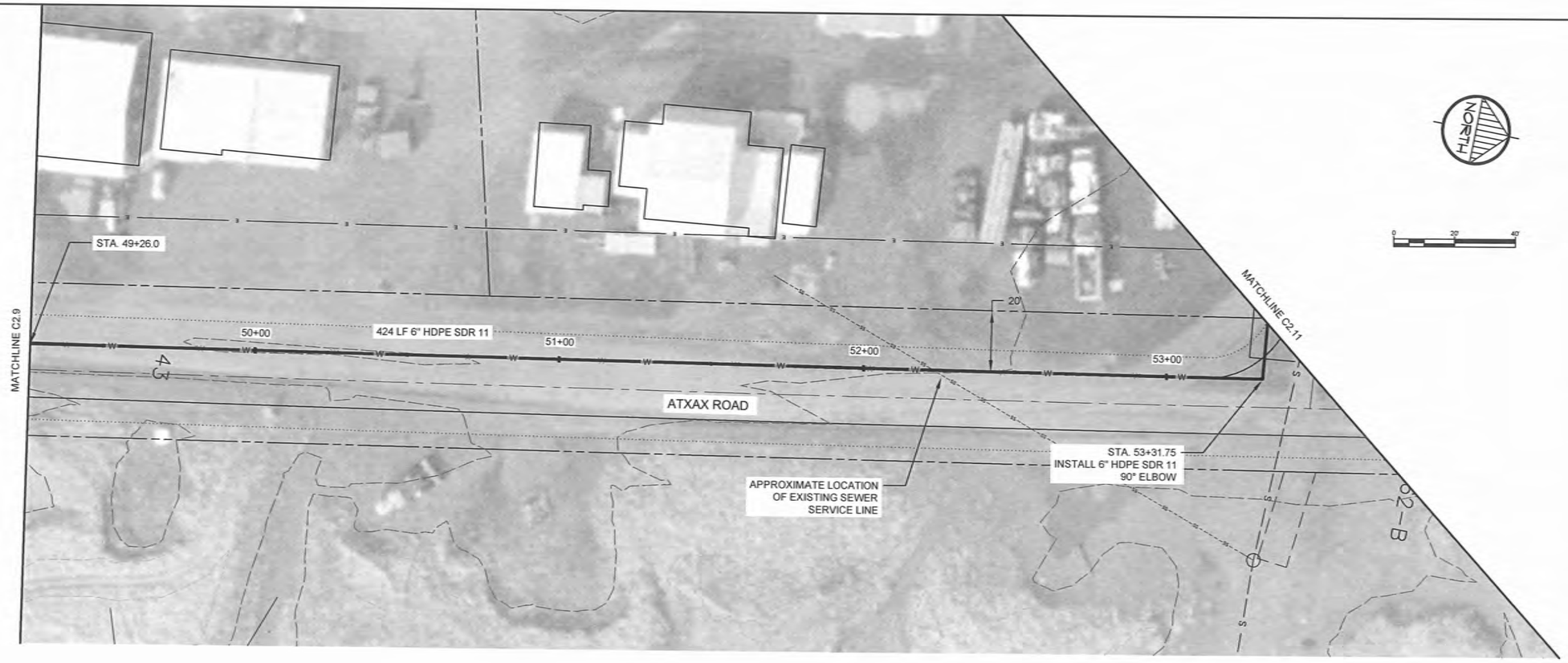

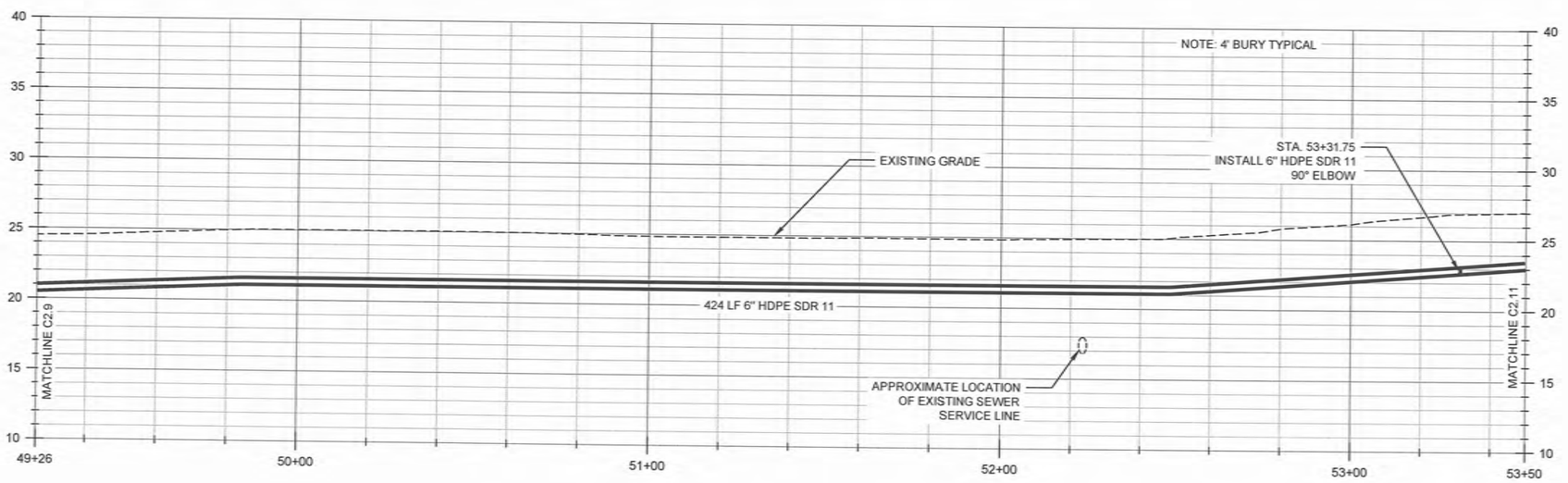

RECORD DRAWING CERTIFICATE

THESE DRAWINGS REFLECT RECORDED INFORMATION OBTAINED DURING CONSTRUCTION. INFORMATION PROVIDED HEREIN IS ACCURATE TO THE BEST OF MY KNOWLEDGE.

NAME _____ DATE _____

SCALE:

BAR IS ONE INCH ON ORIGINAL DRAWING

IF NOT ONE INCH ON THIS SHEET ADJUST SCALES ACCORDINGLY

CONSTRUCTION RECORD

FIELD BOOK
STAKING
FOREMAN
AS-BUILT
INSPECTOR

REVISION | BY | DATE

2009 WATER SYSTEM UPGRADES

PLAN AND PROFILE

ATKA, ALASKA

CE2 ENGINEERS, INC.
PO BOX 223546 ANCHORAGE, AK 99523 PH: 907-349-1015 FAX: 907-349-1015

Project No. _____
Date MAY 2010
Designed LAP
Drawn CM
Approved LAP

Sheet No.
C2.10

G:\ACAD\ATKA\2009 Water System Upgrades\C2.3-C2.11 PLAN PROFILE.dwg, 2/20/2011 9:59:38 AM, Flash, LANIER MP C2050_LD520C PCL 6BLK WHIT.pc3

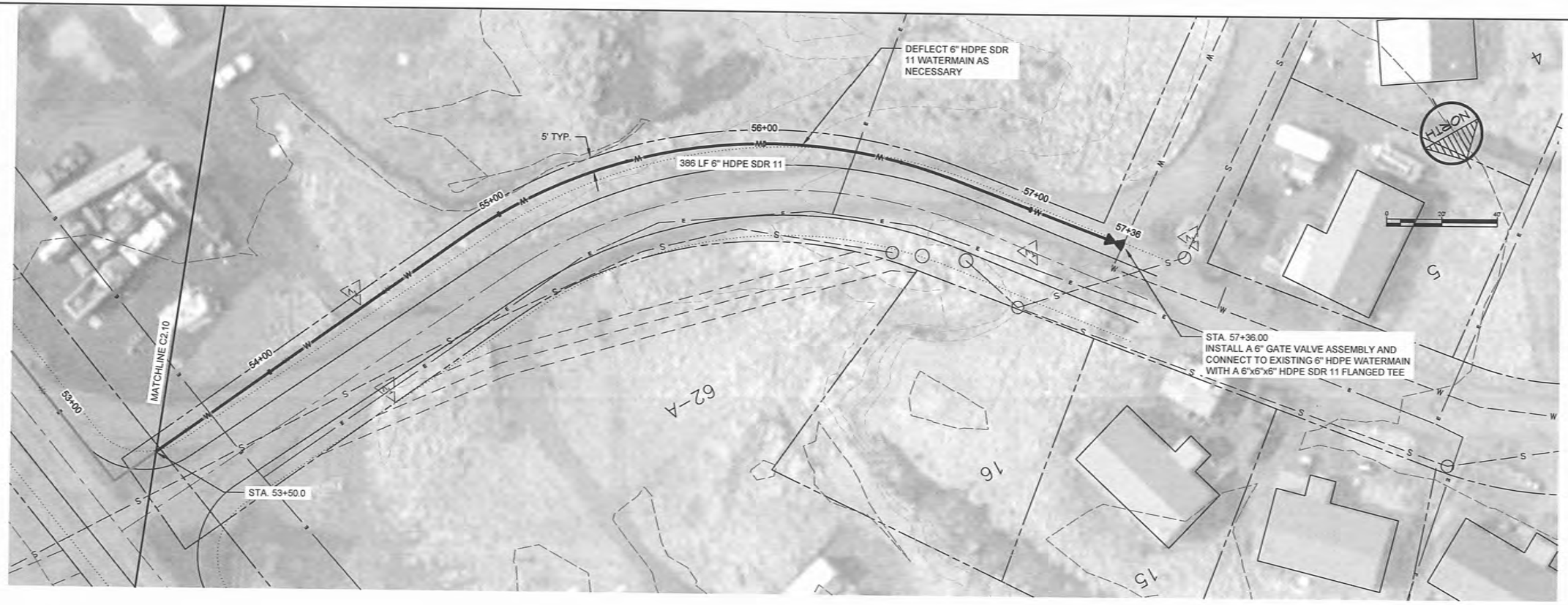

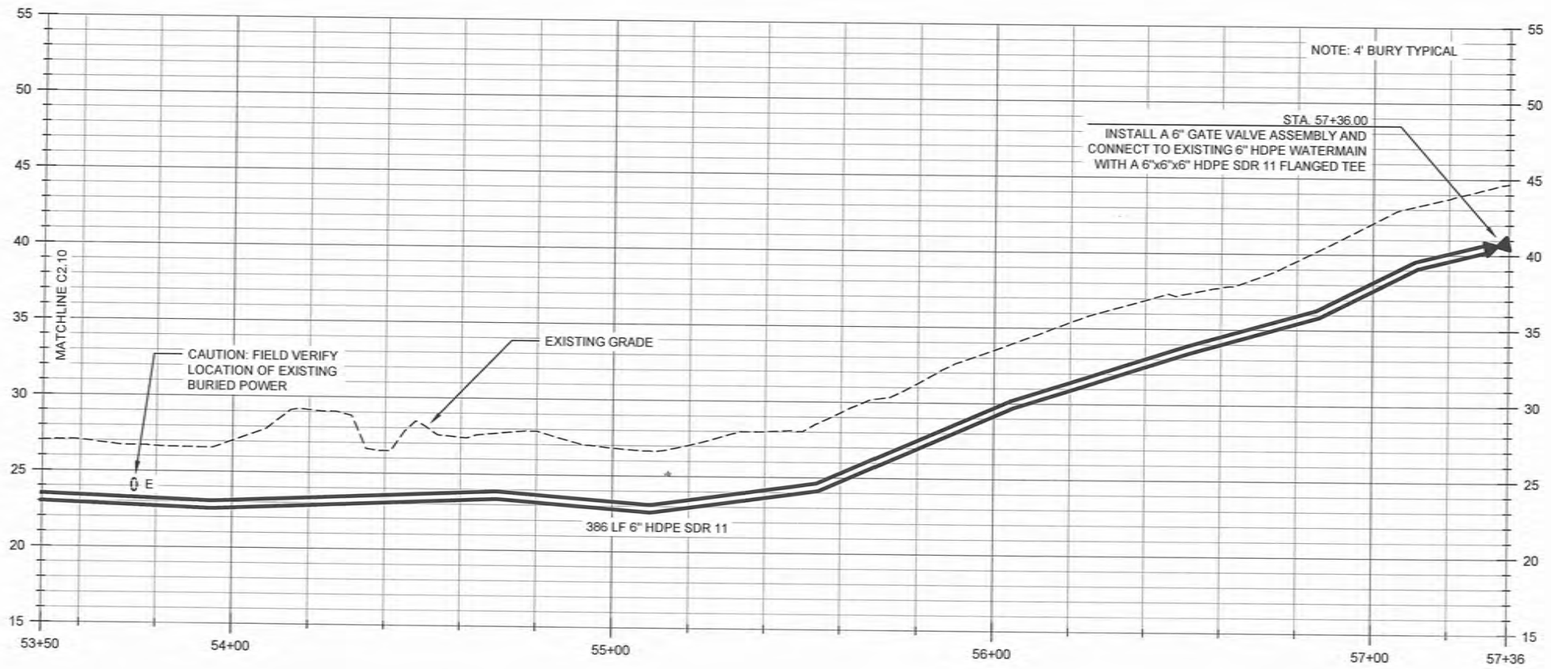

RECORD DRAWING CERTIFICATE

THESE DRAWINGS REFLECT RECORDED INFORMATION OBTAINED DURING CONSTRUCTION. INFORMATION PROVIDED HEREIN IS ACCURATE TO THE BEST OF MY KNOWLEDGE.

NAME DATE

SCALE:

BAR IS ONE INCH ON ORIGINAL DRAWING

IF NOT ONE INCH ON THIS SHEET ADJUST SCALES ACCORDINGLY

CONSTRUCTION RECORD

FIELD BOOK

STAKING

FOREMAN

AS-BUILT

INSPECTOR

REVISION | BY | DATE

2009 WATER SYSTEM UPGRADES

PLAN AND PROFILE

ATKA, ALASKA

CE2 ENGINEERS, INC.
PO BOX 223548 ANCHORAGE, AK 99523 PH 907-349-1010 FAX 907-349-1015

Project No. ____ Date MAY 2010 Designed LAP Drawn CM Approved LAP

Sheet No. C2.11

G:\ACAD\ATKA\2009 Water System Upgrades\C2.3-C2.11 PLAN PROFILE.dwg, 2/20/2011 10:00:27 AM, Flash, LANIER MP C2050_LD520C PCL 6BLK WHITE.pc3

TRENCH NOTES

1. PIPE ZONE MATERIAL SHALL BE TYPE A BACKFILL MEETING ADOT & PF STANDARD SPECIFICATIONS FOR HIGHWAY CONSTRUCTION. SEE SHEET G1.2 FOR PLACEMENT AND COMPACTION REQUIREMENTS.
2. TRENCH ZONE MATERIAL SHALL NOT CONTAIN ORGANIC OR OTHER DELETERIOUS MATERIALS. SEE SHEET G1.2 FOR PLACEMENT AND COMPACTION REQUIREMENTS.
3. TRENCH WALL SHALL BE SLOPED OR SHORED IN CONFORMANCE WITH ALL APPLICABLE SAFETY STANDARDS.
4. REPLACE DISTURBED ROADWAY PER TYPICAL TRENCH SECTION
5. MINIMUM DEPTH OF BURY SHALL BE 48" (TYPICAL). IF 2" OF INSULATION BOARD IS INSTALLED, DEPTH OF BURY MAY BE REDUCED TO NOT LESS THAN 36".

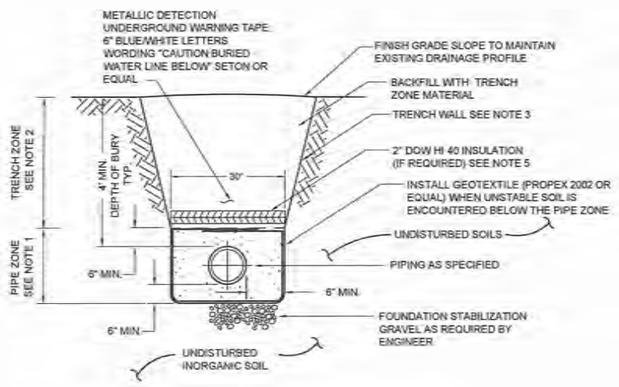

1 C5.1 TYPICAL TRENCH SECTION
SCALE: NTS

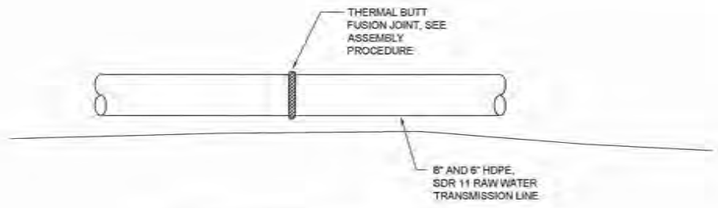

2 C5.1 WATER AND FORCEMAIN BUTT FUSED PIPE JOINT DETAIL
SCALE: NTS

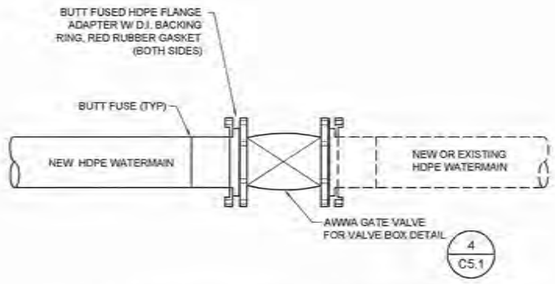

3 C5.1 TYPICAL GATE VALVE JOINT DETAIL
SCALE: NTS

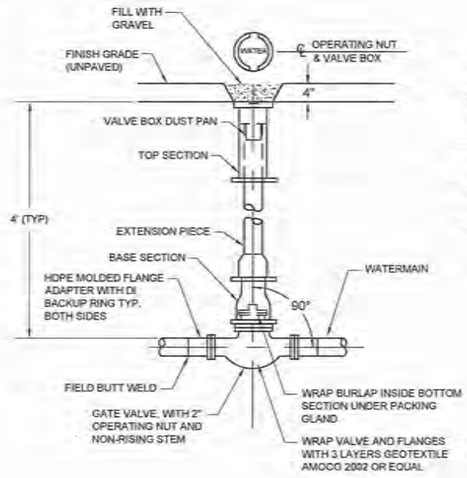

4 C5.1 GATE VALVE CONNECTION DETAIL
SCALE: NTS

GATE VALVE NOTES

1. LID AND TOP SECTION TO BE OLYMPIC FOUNDRY TYPE C OR EQUIVALENT.
2. EXTENSION PIECE TO BE OLYMPIC FOUNDRY TYPE A, OF 5" DIA. SINGLE HUB SOIL PIPE OR APPROVED EQUIVALENT.
3. BASE SECTION TO BE OLYMPIC TYPE B OR EQUIVALENT.
4. VALVE BOX DUST PAN MADE OF 14 GAUGE TUBE.
5. ALL BACK FILL MATERIAL SHALL BE NON FROST SUSCEPTIBLE.

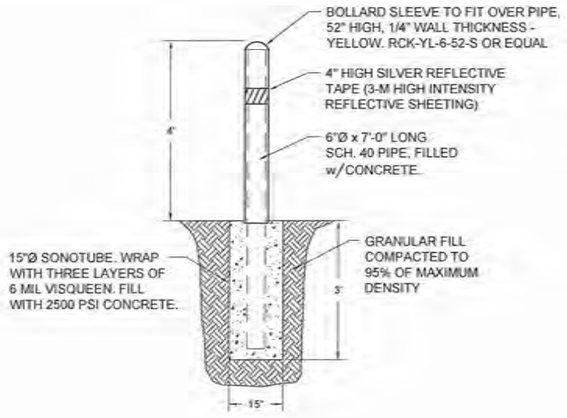

5 C5.1 BOLLARD DETAIL
SCALE: NTS

WATERMAIN JOINT ASSEMBLY PROCEDURE

TRANSPORTATION AND SETUP:

1. EXTREME CARE SHOULD BE TAKEN WHEN BREAKING FACTORY BUNDLES AND TRANSPORTING PIPING TO THE PLACEMENT LOCATION. IF STRIP LOADED, ENSURE THAT CHOCKS ARE SECURED TO BOTH ENDS OF THE TIMBER BEFORE MOVING THE PIPE. IF LOOSE LOADED, ONLY UNTIE THE GROUP OF PIPING TO BE USED. CHAINS SHOULD NOT BE APPLIED DIRECTLY TO THE PIPE AND POINT LOADS SHOULD BE AVOIDED.
2. DO NOT DRAG THE PIPE PRIOR TO FINAL PLACEMENT OF NEW PIPING.
3. DO NOT DROP THE PIPING.
4. PROVIDE ADEQUATE SUPPORTS NEAR THE FUSION STATION TO MATCH THE ALIGNMENT OF THE TWO PIPES TO BE FUSED.
5. PRIOR TO INSTALLING ANY PIPE, INSPECT THE EXTERIOR FOR DAMAGE AND SWAB OUT THE INTERIOR TO REMOVE ANY LOOSE DEBRIS.

THERMAL BUTT FUSION PROCESS

ALL THERMAL BUTT FUSION PROCEDURES USED SHALL BE IN ACCORDANCE WITH THE PLASTIC PIPE INSTITUTE AND THE HDPE PIPE MANUFACTURES RECOMMENDATIONS AND RECORDED ON THE ATTACHED HDPE JOINT FUSION LOG.

THERMAL BUTT FUSION PROCEDURES GENERALLY INCLUDE:

1. CLEAN, CLAMP AND ALIGN THE PIPE ENDS TO BE JOINED.
2. FACE THE PIPE ENDS TO ESTABLISH CLEAN, PARALLEL SURFACES, PERPENDICULAR TO THE CENTERLINE.
3. ALIGN THE PIPE ENDS.
4. CONFIRM THE HEATER PLATE TEMPERATURE AT 430°F.
5. MELT THE PIPE INTERFACES WHILE MAINTAINING FULL CONTACT WITH THE HEATER PLATE BUT NO PRESSURE. THE APPROXIMATE BEAD SIZE SHOULD BE 1/8" TO 3/16" DIAMETER.
6. REMOVE THE HEATER PLATE AND QUICKLY INSPECT THE ENDS OF THE PIPE. IF A CONCAVE MELT SURFACE IS OBSERVED, DO NOT CONTINUE. ALLOW THE PIPE TO COOL AND START OVER. TOO MUCH PRESSURE WAS USED AGAINST THE HEATER PLATE.
7. JOIN THE TWO PIPE ENDS TOGETHER BY APPLYING THE PROPER FUSION FORCE FOR APPROXIMATELY 4 MINUTES.
8. HOLD UNDER PRESSURE UNTIL THE JOINT IS COOL.
9. VISUALLY INSPECT THE FUSION JOINT FOR PROPER ALIGNMENT AND PROPER FUSION BEADS.

6 C5.1 WATERMAIN JOINT ASSEMBLY PROCEDURE
SCALE: NTS

HDPE Joint Fusion Log

Project: _____ Date: _____

Weather Observation: _____ Air Temp: _____

Location of Fused joint: _____ Station or swing tie location: _____

Pipe Size and SDR Rating: _____ Type Fusion Machine: _____

CHECK LIST	
Task	√
Pipe fusion surfaces square, cleaned and faced?	
Observed heating cycle for even and uniform roll back of bead	
Note Hot Plate Temperature	
Pressure Gauge reading during fusion process	
Comments and Observations :	

Fusion Machine Operator: (write name legibly below signature)
Observed and inspected by: (write name legibly below signature)

CE2 Engineers
P.O. BOX 232946 Anchorage, AK 99517 · Tel (907) 349-1010 · Fax (907) 349-1010

7 C5.1 SAMPLE: FUSION LOG
SCALE: NTS

RECORD DRAWING CERTIFICATE
THESE DRAWINGS REFLECT RECORDED INFORMATION OBTAINED DURING CONSTRUCTION. INFORMATION PROVIDED HEREIN IS ACCURATE TO THE BEST OF MY KNOWLEDGE.
NAME _____ DATE _____

SCALE: AS SHOWN AS NOTED

CONSTRUCTION RECORD
FIELD BOOK
STAKING
FOREMAN
AS-BUILT
INSPECTOR

REVISION | BY | DATE

2009 WATER SYSTEM UPGRADES

TRENCH SECTION AND PIPE DETAILS

ATKA, ALASKA

CE2 ENGINEERS, INC.
PO BOX 232946 ANCHORAGE, AK 99523 PH: 907-349-1010 FAX: 907-349-1015

Project No. _____
Date MAY 2010
Designed LAP
Drawn DDR
Approved LAP

Sheet No. C5.1

G:\ACAD\ATKA\2009 Water System Upgrades\C5.1 TRENCH DETAILS.dwg, 5/3/2011 2:27:54 PM, Flash, \\CE2MAIN\LANIER HP C2050/LDS20C PCL 6

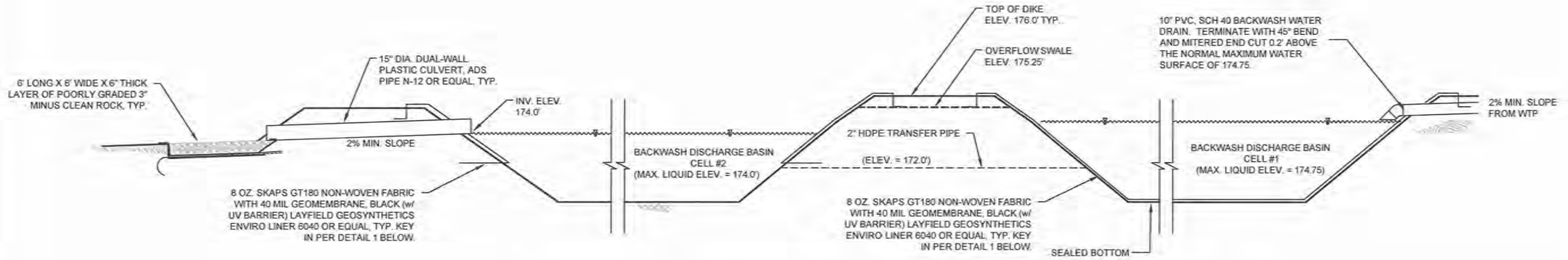

A C5.2 SECTION A: BACKWASH WATER DISCHARGE BASIN - CENTERLINE THROUGH DRAIN STRUCTURE
SCALE: NO SCALE

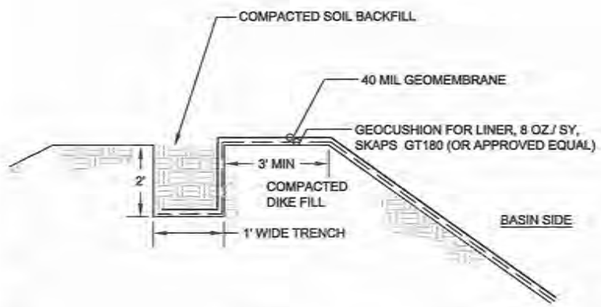

1 C5.2 LINER KEY DETAIL
SCALE: NTS

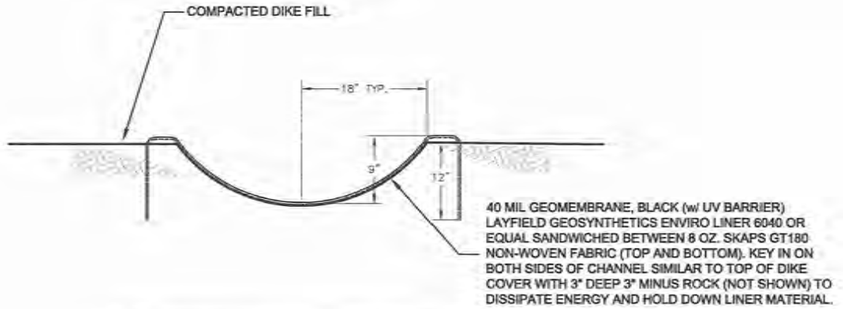

B C5.2 SECTION B - OVERFLOW SWALE
SCALE: NTS

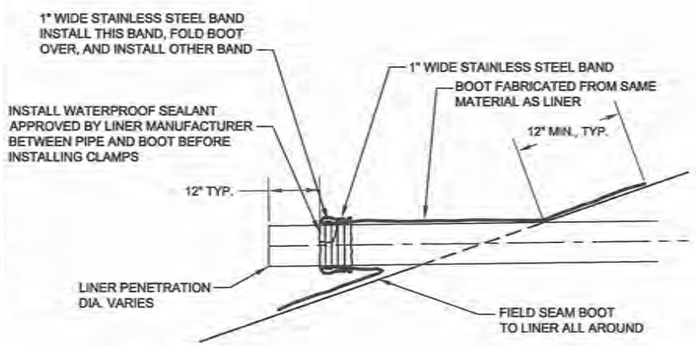

2 C5.2 BOOT DETAIL
SCALE: NTS

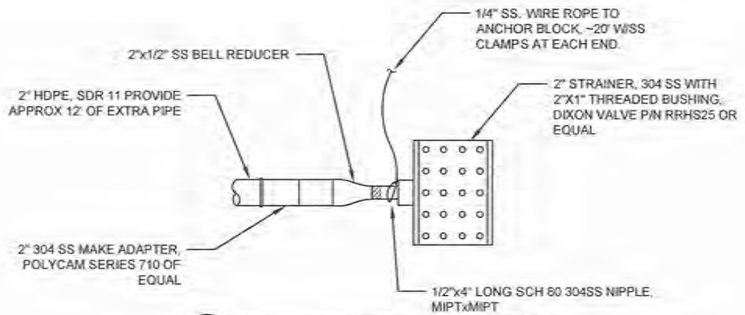

3 C5.2 TRANSFER SCREEN ASSEMBLY
SCALE: NTS

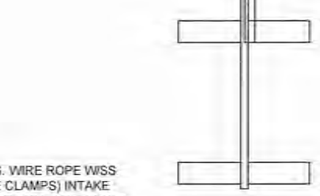

PLAN VIEW

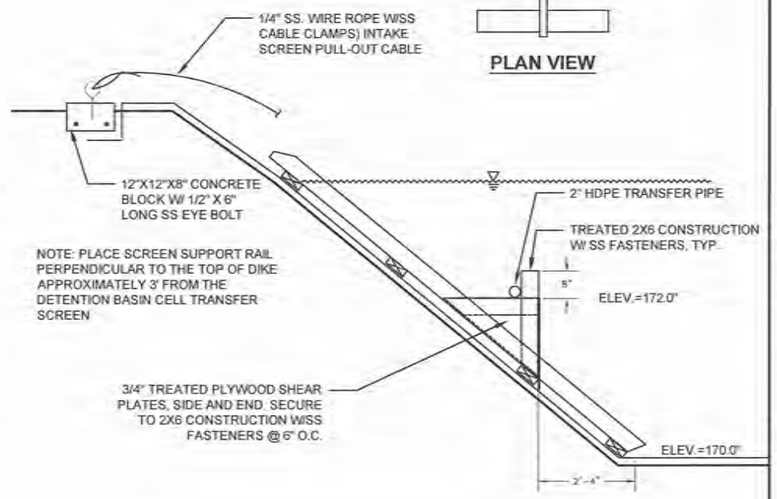

4 C5.2 INTAKE SCREEN SUPPORT RAIL ASSEMBLY
SCALE: NTS

RECORD DRAWING CERTIFICATE:
THESE DRAWINGS REFLECT RECORDED INFORMATION OBTAINED DURING CONSTRUCTION. INFORMATION PROVIDED HEREIN IS ACCURATE TO THE BEST OF MY KNOWLEDGE.
NAME
DATE

SCALE:
BAR IS ONE INCH ON ORIGINAL DRAWING
IF NOT ONE INCH ON THIS SHEET ADJUST SCALES ACCORDINGLY

CONSTRUCTION RECORD
FIELD BOOK
STAKING
FOREMAN
AS-BUILT
INSPECTOR

REVISION | BY | DATE

2009 WATER SYSTEM UPGRADES

LAGOON DRAIN DETAILS
WATER TREATMENT SITE

ATKA, ALASKA

CE2 ENGINEERS, INC.
PO BOX 220946 ANCHORAGE, AK 99503 PH: 907-349-1010 FAX: 907-349-1015

Project No. —
Date — MAY 2010
Designed — LAP
Drawn — RZ
Approved — LAP

Sheet No.
C5.2

G:\ACAD\ATKA\2009 Water System Upgrades\C5.2 LEVEL CONTROL.dwg, 5/3/2011 2:27:30 PM, Flash, \\CE2\MAIN\JANIER MP C2050/LD520C PCL 6

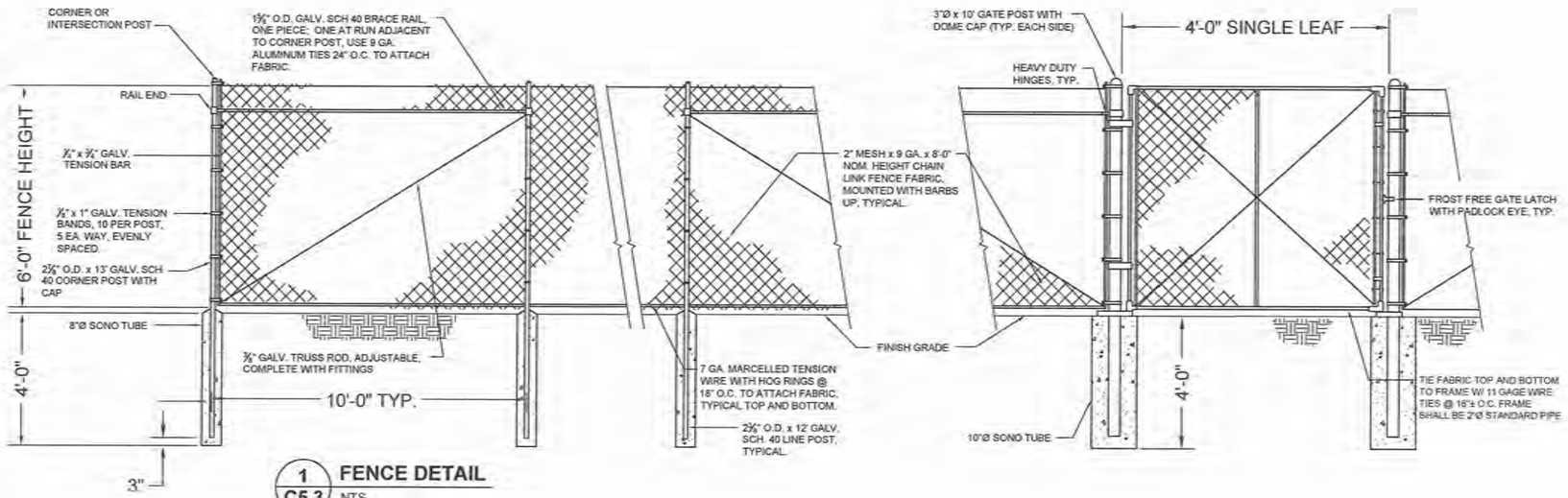

1 C5.3 **FENCE DETAIL**
NTS

2 C5.3 **GATE DETAIL**
NTS

FENCE INSTALLATION NOTES:

1. A STRING LINE SHALL BE USED TO PROVIDE TRUE ALIGNMENT AND FLOWING GRADE CHANGES. POST TOPS MAY BE TRIMMED AS REQUIRED FOR GOOD APPEARANCE.
2. DETAILS SHOWN ARE TO INDICATE GENERAL DESIGN ONLY. DIMENSIONS MAY VARY SLIGHTLY.
3. GATE FABRIC SHALL BE OF THE SAME DESIGN AND HEIGHT AS LINE FENCE FABRIC. ALL SPLICES IN THE FENCING FABRIC SHALL BE MADE BY WEAVING THE STRANDS OF FABRIC TOGETHER IN A VERTICAL SEAM.
4. GATE FRAMES MAY BE FABRICATED BY WELDING OR RIVETING AND SHALL BE BRACED TO ELIMINATE SAGGING. HINGES, LATCHES, AND OTHER GATE APPURTENANCES SHALL BE OF SUFFICIENT STRENGTH AND DESIGN TO ASSURE EASY, TROUBLE FREE OPERATION.
5. POSTS SHALL BE SPACED EQUAL DISTANCES APART. MAXIMUM SPACING SHALL BE 10 FEET UNLESS DIRECTED OTHERWISE BY THE ENGINEER. POST TOPS SHALL BE SECURELY FASTENED TO POST.
6. FABRIC SHALL BE STRETCHED TO A SMOOTH UNIFORM APPEARANCE.
7. LINE POST SHALL BE SET IN 5 SACK, 2000 PSI CONCRETE UNLESS SHOWN OTHERWISE ON THE PLANS.
8. WIRE FENCING SHALL BE PLACED ON SIDE OF POST FACING OUTWARD. TIE WIRES SHALL BE 9 GAGE ALUMINUM.
9. ALL WIRE, POSTS AND HARDWARE SHALL BE GALVANIZED. WEIGHTS AND GAGES SPECIFIED ARE MINIMUMS BEFORE GALVANIZING.

LAGOON ENTRANCE SIGN

OSHA SAFETY SIGN

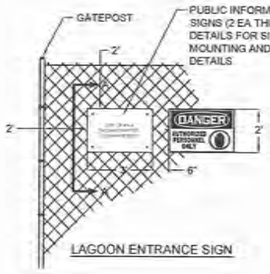

LAGOON ENTRANCE SIGN

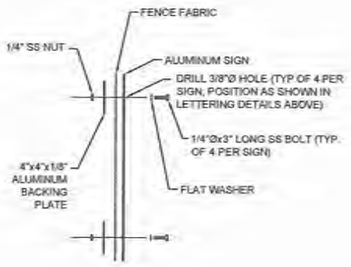

MOUNTING DETAIL SECTION A-A

SIGNS TO BE CONSTRUCTED AS FOLLOWS:

CLEAR, UV RESISTANT TOP FILM
BLACK, BLOCK LETTERS AND LINE ART
WHITE REFLECTIVE BACKING
1/8" ALUMINUM SHEETING

NOTE: ALL LETTERS SHALL BE BLACK AND ABLE TO BE READ FROM A MINIMUM DISTANCE OF 30 FEET.

3 C5.3 **SIGNAGE DETAIL**
NTS

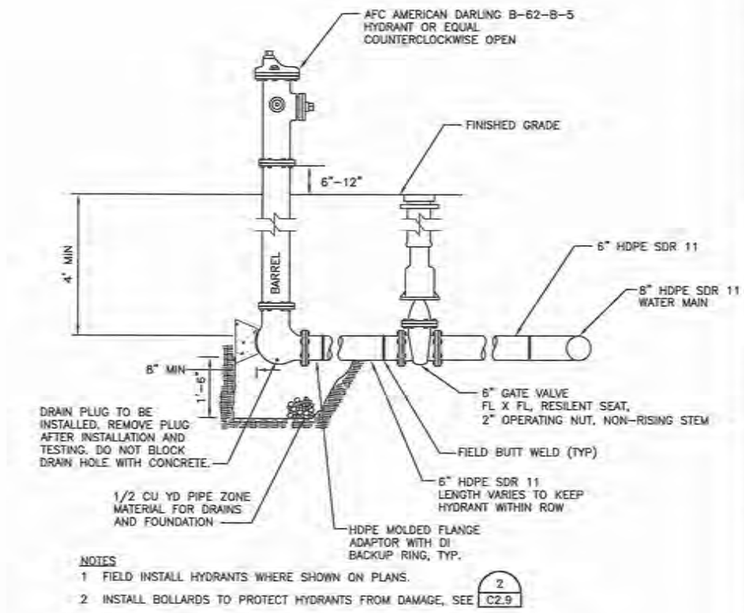

NOTES
1 FIELD INSTALL HYDRANTS WHERE SHOWN ON PLANS.
2 INSTALL BOLLARDS TO PROTECT HYDRANTS FROM DAMAGE, SEE 2 C2.9

4 C5.3 **FIRE HYDRANT DETAIL**
SCALE: NTS

RECORD DRAWING CERTIFICATE:
THESE DRAWINGS REFLECT RECORDED INFORMATION OBTAINED DURING CONSTRUCTION. INFORMATION PROVIDED HEREIN IS ACCURATE TO THE BEST OF MY KNOWLEDGE.
NAME _____ DATE _____

SCALE: AS SHOWN

IF NOT ONE INCH ON THIS SHEET ADJUST ACCORDINGLY

CONSTRUCTION RECORD
FIELD BOOK:
STAKING
FOREMAN
AS-BUILT
INSPECTOR

REVISION | BY | DATE

2009 WATER SYSTEM UPGRADES

FENCE DETAILS

ATKA, ALASKA

CE2 ENGINEERS, INC.
PO BOX 223948 ANCHORAGE, AK 99523 PH 907-348-1010 FAX 907-348-1015

Project No. _____
Date MAY 2010
Designed LAP
Drawn DBR
Approved LAP

Sheet No.
C5.3

G:\ACAD\ATKA\2009 Water System Upgrades\C5.3 FENCE.dwg, 5/3/2011 2:27:11 PM, Flash, LANIER MP C2050_LD520C PCL 6BLK WHIT.pc3

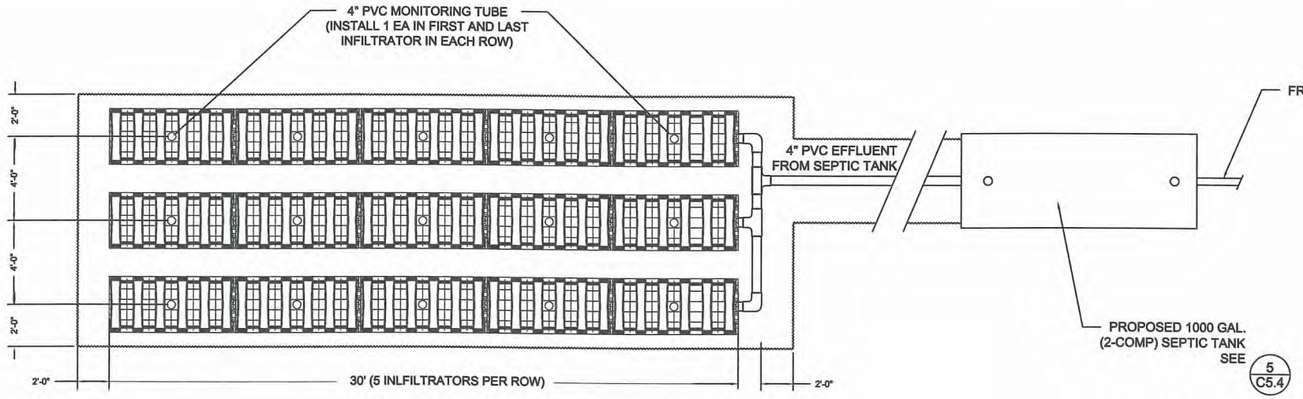

1 C5.4 ABSORBTION BED PLAN
SCALE: NTS

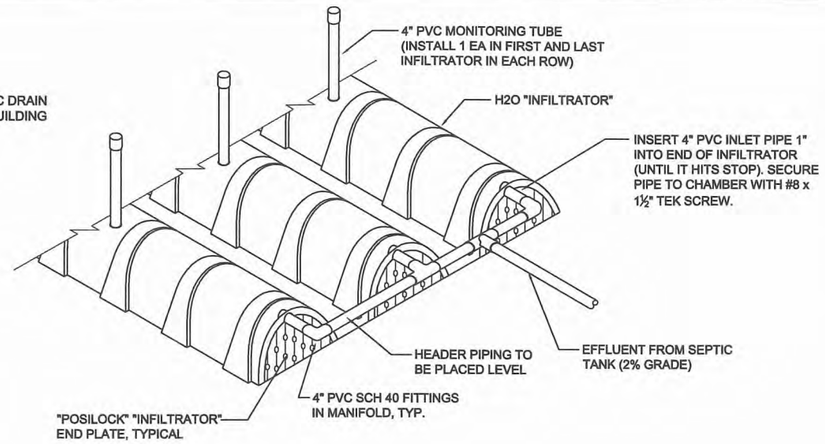

2 C5.4 ABSORBTION BED MANIFOLD DETAIL (3 ROW)
SCALE: NTS

NOTE:
THE SIDES OF THE CHAMBERS SHALL BE SHOVEL FILLED WITH SELECT BACKFILL ONCE CHAMBERS ARE LATCHED AND LEVELED. THIS IS TO PROVIDE CHAMBER SUPPORT, PREVENT MOVEMENT DURING THE FINAL BACKFILL PROCESS AND PREVENT LOOSE SOIL MIGRATION INTO THE CHAMBERS.

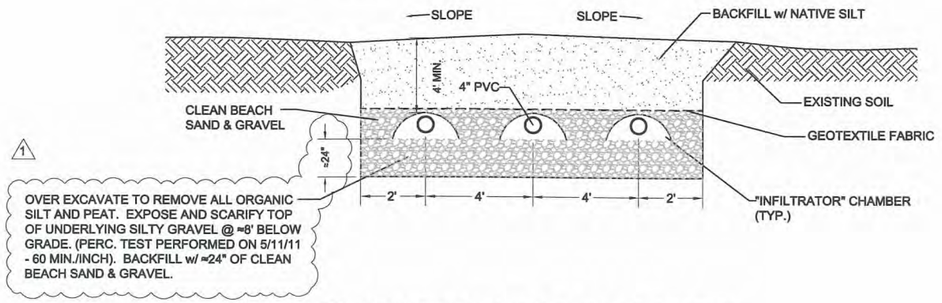

3 C5.4 ABSORBTION FIELD CROSS SECTION
SCALE: NTS

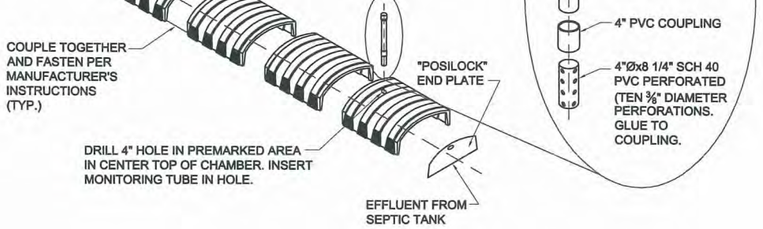

4 C5.4 TYPICAL INFILTRATOR ASSEMBLY
SCALE: NTS

NOTES:

1. STEEL 1000 GALLON - DOUBLE COMPARTMENT ANCHORAGE TANK & WELDING #AT1000S OR EQUAL
2. EXCAVATION TO BE 18"-24" LARGER THEN TANK ALL SIDES.
3. INSTALL RISER EXTENSIONS BEFORE BACK FILLING.
4. BACKFILL IN COMPACTED 8" LIFTS WITH SAND/ GRAVEL MATERIAL LESS THAN 1.5" DIA.
5. SEPTIC TANK AND INFILTRATOR CHAMBERS SHALL BE SET AT A LEVEL GRADE.
6. TANK BOTTOM SHALL BE SET ON INSITU TILL OR COMPACTED SELECT PIT-RUN GRANULAR MATERIAL. EXCAVATE ALL MUSKEG BENEATH TANK.

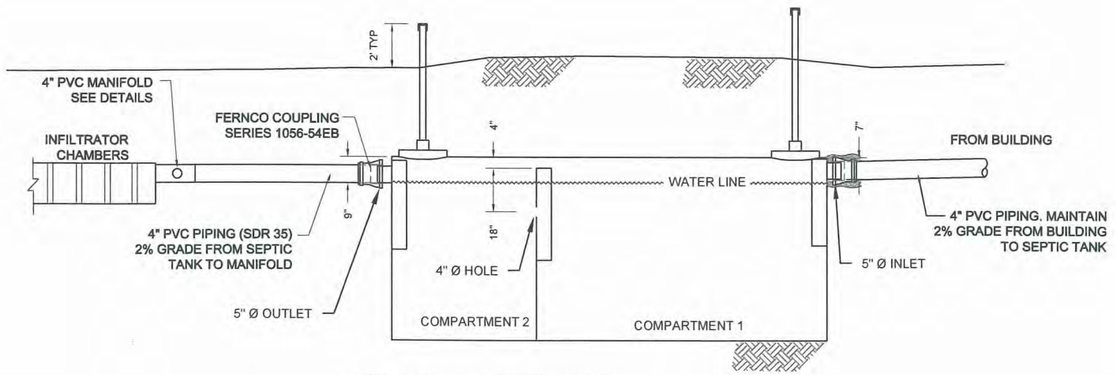

5 C5.4 SEPTIC TANK DETAIL
SCALE: NTS

RECORD DRAWING CERTIFICATE
THESE DRAWINGS REFLECT RECORDED INFORMATION OBTAINED DURING CONSTRUCTION. INFORMATION PROVIDED HEREIN IS ACCURATE TO THE BEST OF MY KNOWLEDGE.
NAME
DATE

SCALE: AS SHOWN
BAR IS ONE INCH ON ORIGINAL DRAWING
IF NOT ONE INCH ON THIS SHEET, ADJUST SCALES ACCORDINGLY

CONSTRUCTION RECORD
FIELD BOOK
STAKING
FOREMAN
AS-BUILT
INSPECTOR

STATE OF ALASKA
REGISTERED PROFESSIONAL ENGINEER
Brad A. Evenson
5/22/11

2009 WATER SYSTEM UPGRADES
ON-SITE WASTEWATER DISPOSAL
ATKA, ALASKA

CE2 ENGINEERS, INC.
PO BOX 232946 ANCHORAGE, AK 99523 PH: 907-348-1010 FAX: 907-348-1015

REVISION	BY	DATE
1 ABSORBTION FIELD	CM	5/11

Project No.
Date MAY 2010
Designed LAP
Drawn LAW
Approved LAP

Sheet No.
C5.4

G:\ACAD\ATKA\2009 Water System Upgrades\C5.4 ONSITE WASTEWATER.dwg, 5/20/2011 3:10:39 PM, cmerz, LANIER MP C2050_LD520C PCL 6.pc3

CODE ANALYSIS

REFERENCED: INTERNATIONAL BUILDING CODE			2006 EDITION (IBC2006) AS ADOPTED BY THE STATE OF ALASKA
OCCUPANCY CLASSIFICATION: GROUP B BUSINESS GROUP			(REF: IBC 2006, SEC. 304.1)
TYPE OF CONSTRUCTION: TYPE V-B			(REF: IBC 2006, TABLE 601) (REF: IBC 2006, SEC. 602.5)
HEIGHT AND NUMBER OF STORIES, ALLOWABLE AREAS: GROUP F-1 PROVIDED: 10'-0" 1 STORY ALLOWED: 40'-0" 1 STORY		8,500 S.F. / STORY	(REF: IBC 2006, TABLE 503) 896 S.F. 8,500 S.F.
AREA MODIFICATIONS: FRONTAGE SPRINKLER INCREASE AREA INCREASE	(NOT NEEDED) (NOT NEEDED) (NOT NEEDED)	0 S.F. 0 S.F. 0 S.F.	(REF: IBC 2006, SEC. 506.2) (REF: IBC 2006, SEC. 506.3) (REF: IBC 2006, SEC. 506.1)
CONSTRUCTION REQUIREMENTS: BUILDING ELEMENT STRUCTURAL FRAME EXTERIOR BEARING WALLS INTERIOR BEARING WALLS EXTERIOR NON-BEARING WALLS INTERIOR NON-BEARING WALLS FLOOR CONSTRUCTION ROOF CONSTRUCTION EXTERIOR DOOR AND WINDOWS	TYPE V-B (NOT SPRINKLERED) 0HR 0HR FIRE SEPERATION DISTANCE >10<30 FT 0HR 0HR FIRE SEPERATION DISTANCE >10<30 FT 0HR 0HR 0HR UNPROTECTED = NO LIMIT		(REF: IBC 2006, TABLE 601) (REF: IBC 2006, TABLES 601 & 602) (REF: IBC 2006, TABLES 601 & 602) (REF: IBC 2006, TABLE 704.8)
CALCULATED OCCUPANT LOAD: GROUP F-1 896 S.F. / (100 S.F. / OCCUPANT) = 9 OCCUPANTS MAXIMUM (INDUSTRIAL AREAS)			(REF: IBC 2006, TABLE 1004.1.1)

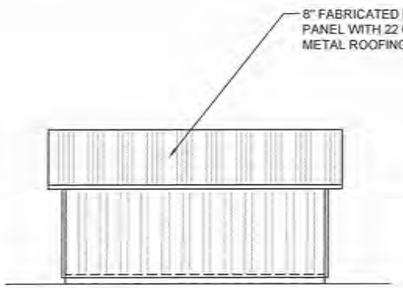

WEST ELEVATION

Scale: 1/8" = 1'-0"

NORTH ELEVATION

Scale: 1/8" = 1'-0"

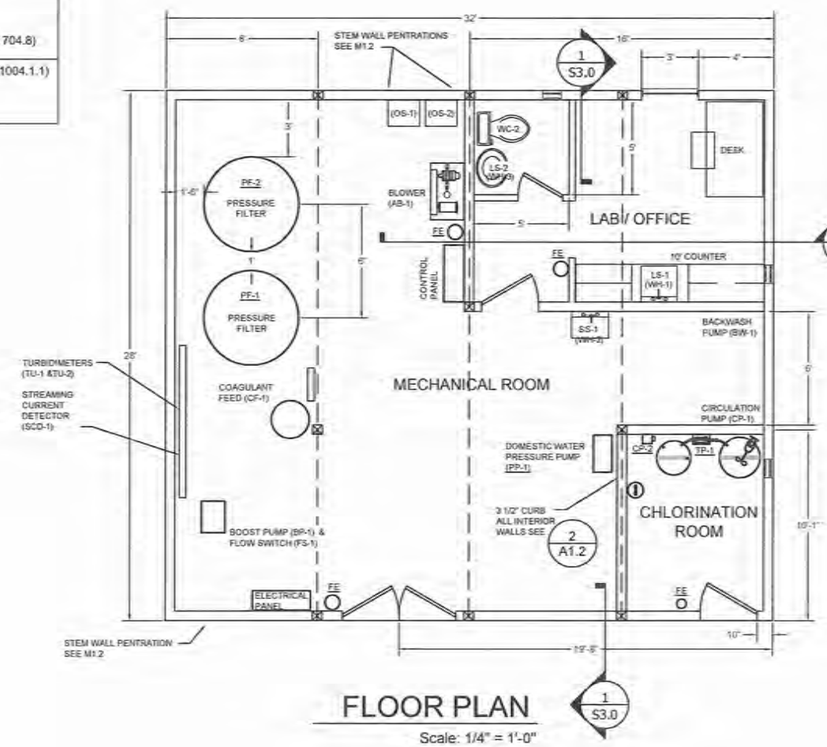

FLOOR PLAN

Scale: 1/4" = 1'-0"

EAST ELEVATION

Scale: 1/8" = 1'-0"

FE

WALL MOUNTED
2A:20 B:C PORTABLE FIRE EXTINGUISHER

TOP OF EXTINGUISHER SHALL BE 48" ABOVE FLOOR

4 12

SOUTH ELEVATION

Scale: 1/8" = 1'-0"

SHEET NOTES

1. THE SELECTED BUILDING PACKAGE MUST INCLUDE:
   - ENGINEERING CALCULATIONS SEALED BY A PROFESSIONAL ENGINEER REGISTERED IN THE STATE OF ALASKA, SHOWING THAT THE PROPOSED BUILDING PACKAGE IS IN COMPLIANCE WITH THE SPECIFIED DESIGN LOADS.
   - DETAILED ERECTION DRAWINGS AND PROCEDURES FOR ASSEMBLY OF THE COMPLETE BUILDING PACKAGE.
   - ALL REQUIRED FRAMING, ROOFING, TRIM METAL SIDING AND OTHER FLASHING FOR PENETRATIONS SHOWN.
   - 125% OF ALL FASTENERS REQUIRED TO ERECT THE STRUCTURE.
2. THE DIMENSIONS PROVIDED ARE APPROXIMATE ROUGH OPENINGS. ALL WALL PANEL PENETRATIONS SHALL BE FIELD CUT UNLESS OTHERWISE SPECIFIED.
3. PROVIDE CURB BLOCKOUTS AT ALL DOOR LOCATIONS.
4. 3 1/2" RAISED CONCRETE CURB TO BE POURED AT ALL INTERIOR WALLS.
5. THE INTERIOR OF THE BUILDING MUST BE SEPARATED FROM THE FOAM INSULATION PANELS BY AN APPROVED THERMAL BARRIER OF 1/2" GYPSUM WALL BOARD.

RECORD DRAWING CERTIFICATE
THESE DRAWINGS REFLECT RECORDED INFORMATION OBTAINED DURING CONSTRUCTION. INFORMATION PROVIDED HEREIN IS ACCURATE TO THE BEST OF MY KNOWLEDGE.
NAME DATE

SCALE:
BAR IS ONE INCH ON ORIGINAL DRAWING
IF NOT ONE INCH ON THIS SHEET ADJUST SCALES ACCORDINGLY

CONSTRUCTION RECORD
FIELD BOOK
STAKING
FOREMAN
AS-BUILT
INSPECTOR

REGISTERED PROFESSIONAL ENGINEER
STATE OF ALASKA
49 TH
NO. LP 9492

2009 WATER SYSTEM UPGRADES

WTP ELEVATIONS & FLOOR PLAN

ATKA, ALASKA

CE2 ENGINEERS, INC.
PO BOX 232048 ANCHORAGE, AK 99523 PH: 907-349-1010 FAX: 907-349-1015

REVISION	BY	DATE

Project No. ____ Date MAY 2010
Designed LAP
Drawn LAW
Approved LAP

Sheet No. A1.1

G:\ACAD\ATKA\2009 Water System Upgrades\A1.1 WTP PLAN.dwg, 5/3/2011 2:16:13 PM, Flash, LANIER MP C2050_LD520C PCL 6BLK WHIT.pc3

ROOM FINISH SCHEDULE

ALL COLORS/FINISHES TO BE SELECTED BY OWNER.

ROOM NUMBER	WALLS AND CEILINGS				CEILING/ HEIGHT AFF
	INTERIOR	EXTERIOR	CEILING	FLOOR	
R-101	1/2" CDX & FRP PANELS	1/2" GWB & FRP PANELS	1/2" GWB PAINTED	SEALED CONCRETE	8'-0" MAX
R-102	1/2" CDX & FRP PANELS	1/2" GWB & FRP PANELS	1/2" GWB PAINTED	SEALED CONCRETE	12'-1" MAX
R-103	1/2" CDX & FRP PANELS	1/2" GWB & FRP PANELS	1/2" GWB PAINTED	SEALED CONCRETE	14'-9" MAX
R-104	1/2" CDX & FRP PANELS	1/2" GWB & FRP PANELS	1/2" GWB PAINTED	SEALED CONCRETE	8'-0"

DOOR SCHEDULE

NUMBER	SIZE			LABEL	TYPE	MAT'L	FINISH	HDW. ANSI FUNCTION	REMARKS
	WIDTH	HEIGHT	THK.						
R-101 D1	3'-0"	7'-0"	1 3/4"		F	HM	PAINTED		WITH AUTO CLOSER
R-102 D2	3'-0"	7'-0"	1 3/4"		F	HM	PAINTED		WITH AUTO CLOSER
R-103 D3	6'-0"	7'-0"	-		RO	HM	FACTORY FINISH		WITH AUTO CLOSER
R-104 D4	2'-4"	7'-0"	1 3/4"		F	HM	PAINTED		WITH AUTO CLOSER

NOTES:
1. ALL DOORS SHALL BE CURRIES "7075" SERIES, PRIMED AND PREPARED FOR HARDWARE AS SPECIFIED.
2. DOORS, FRAMES AND HARDWARE ARE TO BE TREATED AS COMPLETE ASSEMBLIES.
3. LOCKSETS SHALL BE BEST SERIES 9K WITH BEST STYLE A1 KEYS STAMPED WITH APPROPRIATE CODE KEY.
4. CLOSURES SHALL BE LCN CLOSURES MOD #4013 WITH ALUMINUM FINISH.
5. HINGES SHALL BE STANLEY FBB LINE BALL BEARING HINGES.

WINDOW SCHEDULE

NUMBER	SIZE		REMARKS	SPECIFICATION
	WIDTH	HEIGHT		
W1	3'-0"	4'-0"	TOP OF WINDOW 7'-0" ABOVE TOC SLAB	CAPITOL GLASS, NORTHERM TRIPLE PANE LOW-E, CASEMENT, OR EQUAL

ROOM AND DOOR SCHEDULE

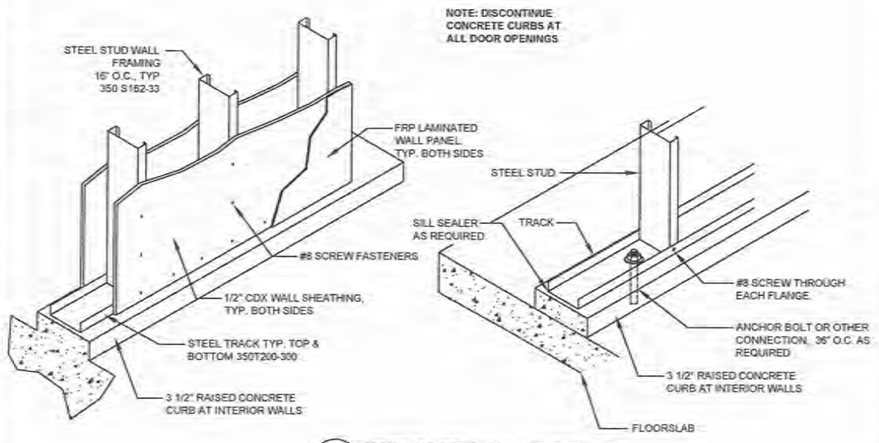

2 / A1.2 INTERIOR WALL DETAILS
SCALE: N.T.S.

ALL CABINETRY TO BE ATTACHED TO WALL STUDS PER MANUFACTURE RECOMMENDATIONS

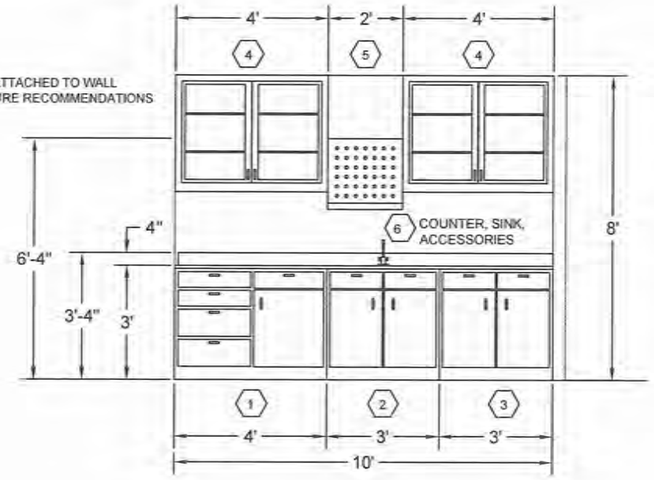

2 / A1.2 CABINET ELEVATION
SCALE: 1"=10'

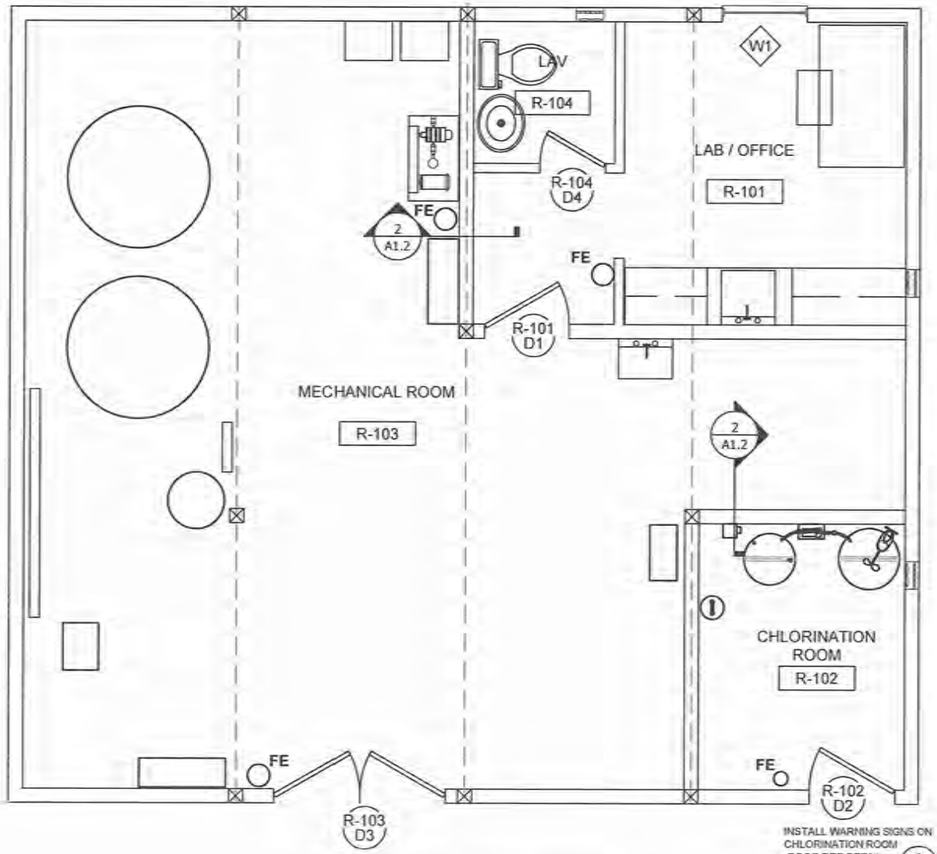

1 / A1.2 ROOM AND DOOR PLAN
SCALE: 3/8" = 1'-0"

ATKA WTP LABORATORY CASEMENT SCHEDULE

1. (2) 4½" HIGH DRAWERS SIDE BY SIDE ABOVE 1 DRAWER 4½" HIGH ABOVE 2 DRAWERS, 7 ½" RH CUBOARD 35¾" x 48"
   - #377S8320 LEFT SIDE OF SINK CABINET 5 DRAWER RH HINGED CUPBOARD 35¼"X48"
2. SINK SOLID HINGED DOUBLE DOOR 35 ½" x 48"
   - #115S6320 SINK CABINET LH/RH HINGED CUPBOARD 35¼"X36"
3. (2) 4½" DRAWERS ABOVE CUBOARD DOORS 35 ½" x 36"
   - #345S6320STORAGE CABINET 2-UPPER DRAWERS, LH/RH HINGED CUPBOARDS 35¼"X36"
4. (2) FRAMED CLASS SWINGING DOOR W/2 SHELVES EACH 31" TALL x 16" DEEP x 48" WIDE
   - #726S8360 WALL MOUNT CABINETS X2, LH/RH FRAMED GLASS DOORS 31"HX16"DX48"W
5. PEG BOARD WITH DRIP TROUGH 22 ⅜" x 24"
   - #52L77500 BLACK PEG BOARD 22⅜"X24" W/TROUGH
6. COUNTER, SINK, ACCESSORIES
   - #52LEPL-50C BLACK EPOXY RESIN SINGLE COMPARTMENT SINK, 16"X24"
   - #20L446BO BLACK EPOXY RESIN COUNTERTOP, CONFIGURATION "B", BUTT CUT, STANDARD EDGE. 10'X30"
   - #20L91910 16"X24" SINK CUTOUT
   - #20L91980 FIXTURE CUTOUT FOR FAUCET (#32L23200)
   - #32L23200 VANDAL RESISTANT DECK MOUNT MIXING FAUCET, 6" RIGID VACUUM GOOSE NECK
   - #34L01800 SINK OUTLET W/BASKET, 4 ½" OVERALL DIAMETER, 1 ½" OUTLET
   - #531S0480 WALL CASE MOUNTING BRACKET, 48" LONG, X 2 FOR BOTH CABINETS BLANK OF BLACK EPOXY RESIN FOR END SPLASH BOTH SIDES OF COUNTERTOP, 12"X30" EXTRA EPOXY RESIN ADHESIVE FOR FIELD APPLICATION OF END SPLASHES.

NOTES:
1. BQX TEXT CONTAINS TAKEOFFS USING (FISCHER CABINET NUMBERS)
2. BLANK OF BLACK EPOXY RESIN FOR FIELD FABRICATION OF END SPLASHES

FE
WALL MOUNTED
2A:20 B:C PORTABLE FIRE EXTINGUISHER
TOP OF EXTINGUISHER SHALL BE 48" ABOVE FLOOR

RECORD DRAWING CERTIFICATE:
THESE DRAWINGS REFLECT RECORDED INFORMATION OBTAINED DURING CONSTRUCTION. INFORMATION PROVIDED HEREIN IS ACCURATE TO THE BEST OF MY KNOWLEDGE.
NAME
DATE

SCALE:
IF NOT 1 INCH ON THIS SHEET ADJUST SCALE ACCORDINGLY

CONSTRUCTION RECORD
FIELD BOOK
STAKING
FOREMAN
AS-BUILT
INSPECTOR

REVISION | BY | DATE
ROOM FINISH SCHEDULE, NOTE, FINISHES AND WARNING SIGNS | LAW | 4/11

2009 WATER SYSTEM UPGRADES
ROOM SCHEDULES
ATKA, ALASKA

CE2 ENGINEERS, INC.
PO BOX 223948 ANCHORAGE, AK 99522 PH: 907-348-1010 FAX: 907-348-1015

Project No
Date MAY 2010
Designed LAP
Drawn DDR
Approved LAP

Sheet No.
A1.2

G:\ACAD\ATKA\2009 Water System Upgrades\A1.2 ROOM SCHEDULES.dwg, 5/4/2011 9:02:06 AM, Flash, LANIER MP C2050_LD520C PCL 6BLK WHIT.pc3

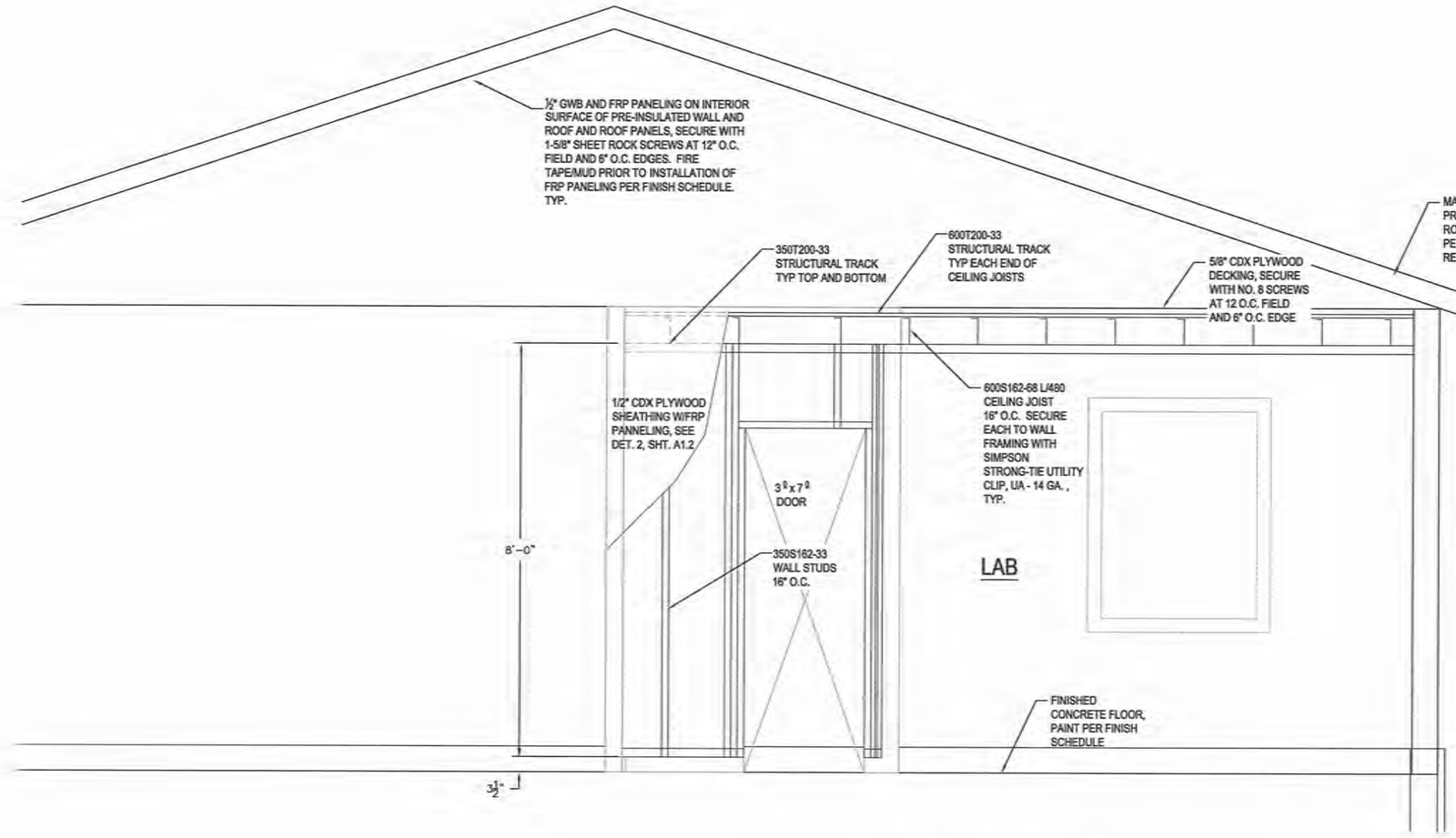

A / A1.3 LABORATORY AND RESTROOM CEILING FRAMING DETAIL
SCALE: 3/4"=1'

INSTALL WARNING SIGNS ON DOOR INTO CHLORINATION ROOM. PLACE SIGNS AT EYE LEVEL ON OUTSIDE OF DOOR.

1 / A1.3 CHLORINATION ROOM WARNING SIGNS
SCALE: 3/4"=1'

RECORD DRAWING CERTIFICATE:
THESE DRAWINGS REFLECT RECORDED INFORMATION OBTAINED DURING CONSTRUCTION. INFORMATION PROVIDED HEREIN IS ACCURATE TO THE BEST OF MY KNOWLEDGE.
NAME
DATE

SCALE: AS SHOWN

CONSTRUCTION RECORD
FIELD BOOK
STAKING
FOREMAN
AS-BUILT
INSPECTOR

2009 WATER SYSTEM UPGRADES

LABORATORY AND RESTROOM CEILING DETAIL
ATKA, ALASKA

CE2 ENGINEERS, INC.
PO BOX 223948 ANCHORAGE, AK 99522 PH: 907-346-1010 FAX: 907-346-1015

REVISION	BY	DATE

Project No. ____
Date MAY 2010
Designed LAP/CW
Drawn LAW
Approved LAP/CW

Sheet No. A1.3

G:\ACAD\ATKA\2009 Water System Upgrades\A1.3 details.dwg, 5/4/2011 9:12:39 AM, lpersson, \\CE2MAIN\LANIER MP C2050/LD520C PCL 6

GENERAL STRUCTURAL NOTES

THE FOLLOWING NOTES APPLY TO BUILDING CONSTRUCTION:

CODE: 2006 INTERNATIONAL BUILDING CODE (IBC) UNLESS NOTED OTHERWISE

1. LOADS
   GROUND SNOW LOAD = 30 PSF
   FLAT ROOF SNOW, Pf = 30 PSF
   SNOW LOAD IMPORTANCE FACTOR, I = 1.1
   THERMAL FACTOR, Ct = 1.0
   WIND = 150 MPH, EXPOSURE D
   IMPORTANCE FACTOR: I = 1.15, BUILDING CATEGORY III
   SEISMIC DESIGN CATEGORY III
   Ss = 1.75 SITE CLASS D S1 = 0.75
   I = 1.25 SDs = 1.17

2. CONTRACTOR TO INSPECT THE EXISTING SITE PRIOR TO BIDDING. ALL DEVIATIONS FROM CONTRACT INFORMATION THAT ARE EXPOSED TO VIEW ARE ASSUMED ACCEPTABLE AT THE TIME OF THE BID.

3. ALL DIMENSIONS MUST BE VERIFIED BY THE CONTRACTOR PRIOR TO START OF ANY WORK.

4. GENERAL CONTRACTOR SHALL BE RESPONSIBLE FOR COORDINATING ALL WORK BETWEEN SOILS TESTING LAB AND FOUNDATION CONTRACTOR.

5. FOUNDATION
   ALLOWABLE SOIL PRESSURE IS 3000 PSF. SEE GEOTECHNICAL REPORT FROM BY DUANNE MILLER ASSOCIATES LLC, DATED NOVEMBER 30, 2009.

   THE ORGANIC SOILS, PEAT AND ORGANIC SILT SHOULD BE REMOVED FROM THE BUILDING AREA AND BE REPLACED WITH PROPERLY COMPACTED, INORGANIC FILL MATERIAL. THE REMOVAL OF WEAK SOILS SHOULD EXTEND HORIZONTALLY AT LEAST FIVE FEET BEYOND PERIMETER OF THE BUILDING. THE BOTTOM OF THE OVER-EXCAVATION SHOULD EXPOSE THE SILT WITH ROCK FRAGMENTS. THE DEPTH OF EXCAVATION SHOULD BE AT LEAST FIVE FEET. THE BOTTOM OF THE EXCAVATION SHOULD BE PROOF-ROLLED AND IF SOFT SPOTS ARE FOUND, THE EXCAVATION SHOULD BE DEEPENED.

   THE MATERIAL USED TO BACKFILL THE EXCAVATION SHOULD BE A MIXTURE OF SAND AND GRAVEL. THE MATERIAL SHOULD BE PLACED IN THIN LIFTS, AND EACH LIFT SHOULD BE COMPACTED TO AT LEAST 95% OF THE MAXIMUM DENSITY OF THE MATERIAL AS DETERMINED BY THE ASTM D1557 TEST PROCEDURE.

6. CONCRETE
   f'c=4000 PSI FOR FOOTINGS, SLABS AND FOUNDATION WALLS. ULTIMATE STRENGTH DESIGN METHOD USED. MIXING AND PLACING OF ALL CONCRETE AND SELECTION OF MATERIALS SHALL BE IN ACCORDANCE WITH THE IBC AND ACI CODE 318-02.

   MINIMUM MIX DESIGN FOR AIR-ENTRAINED CONCRETE

   SLUMP = 3-IN. TO 4-IN.
   WATER CEMENT RATIO = 0.50
   MAXIMUM SIZE OF AGGREGATE = 1 1/2"
   AIR CONTENT = 5% ±1%
   WATER = 265 LB. PER CU.YD. OF CONCRETE
   CEMENT = 530 LB. PER CU.YD. OF CONCRETE
   FINE SAND, FINENESS MODULUS = 2.50
   FINE AGGREGATE:
   = 32% OF TOTAL AGGREGATE
   = 980 LB. PER CU.YD. OF CONCRETE
   COARSE AGGREGATE = 2110 LB. PER CU.YD. OF CONCRETE
   PROVIDE 1/2" CHAMFER TO ALL EXPOSED CONCRETE EDGES.
   KEYED CONSTRUCTION JOINTS SHALL BE USED IN ALL CASES. ALL CONSTRUCTION JOINTS SHALL BE THOROUGHLY CLEANED AND ALL LAITANCE SHALL BE REMOVED. ALL VERTICAL JOINTS SHALL BE THOROUGHLY WETTED AND SLUSHED WITH A COAT OF NEAT CEMENT. USE DOWELED EXPANSION/CONTROL JOINTS PER TYPICAL DETAILS.

   ANCHOR BOLTS, DOWELS AND OTHER EMBEDDED ITEMS SHALL BE SECURELY TIED IN PLACE BEFORE CONCRETE IS POURED.

   NO HEATING SHALL BE ALLOWED FOR BENDING OF REINFORCING STEEL UNLESS APPROVED BY ENGINEER.

7. FIELD GROUTING
   GROUT IS TO BE NON-METALLIC MASTER BUILDERS MASTERFLOW 713 NON-SHRINK GROUT OR ENGINEER APPROVED EQUAL, f'c=6,000 PSI.

8. REINFORCING STEEL
   ALL CONCRETE REINFORCING STEEL SHALL BE EPOXY COATED BARS A775 GRADE 60 (fy=60,000 PSI), EXCEPT ALL #4 SLAB REINFORCEMENT AND DOWELS SHALL BE GRADE 40 (fy=40,000 PSI). LAP CONTINUOUS REINFORCING BARS 40 BAR DIAMETERS 24" MIN. UNLESS INDICATED OTHERWISE. CORNER BARS (24" BEND) WILL BE PROVIDED FOR ALL HORIZONTAL REINFORCEMENT. LAPS SHALL BE WELL STAGGERED. DETAIL STEEL IN ACCORDANCE WITH ACI "MANUAL OF STANDARD PRACTICE OF DETAILING CONCRETE STRUCTURES". WELDED WIRE FABRIC (WWF) TO CONFORM WITH ASTM A185. REINFORCING HOOKS TO COMPLY WITH ACI STANDARD MINIMUM COVER TO MAIN REINFORCEMENT SHALL BE:
   BOTTOM OF FOOTINGS..................................3"
   FORMED SURFACES--EXPOSED TO WEATHER, EARTH OR CORROSIVE ENVIRONMENT
   #6 AND LARGER......................2"
   #5 AND SMALLER....................1-1/2"
   INTERIOR FACE......................3/4"
   LAP WELDED WIRE FABRIC 2 SPACES PLUS 2 INCHES OR 12" MINIMUM.

9. LUMBER
   PROVIDE LAMINATED WOOD BEAMS AS SHOWN ON PLANS AND DETAILS.

   DOUG-FIR #2 MEMBERS (P.T. POSTS) SHALL HAVE THE FOLLOWING ALLOWABLE STRESSES:

   Fb = 900 psi – BENDING
   Fv = 180 psi – SHEAR
   Fc = 1350 psi – COMPRESSION PARALLEL TO GRAIN
   Fc = 625 psi – COMPRESSION PERPENDICULAR TO GRAIN
   E = 1600 ksi – MODULUS OF ELASTICITY

   GLULAM BEAMS (DF 24F-E13) SHALL HAVE THE FOLLOWING ALLOWABLE STRESSES:

   Fb = 2400 psi – BENDING
   Fv = 240 psi – SHEAR
   Fc = 1700 psi – COMPRESSION PARALLEL TO GRAIN
   Fc = 650 psi – COMPRESSION PERPENDICULAR TO GRAIN
   E = 1800 ksi – MODULUS OF ELASTICITY

   GENERAL CONTRACTOR SHALL COORDINATE AND INSURE THAT MATERIALS NEEDED TO CONNECT FABRICATIONS TO SUBSTRATE ARE FURNISHED.

   USE KILN DRIED GRADED LUMBER STORED IN A CONTINUOUS COVERED CONDITION. PRESSURE TREATED WOOD MUST BE USED WHEN IN CONTACT W/ CONCRETE OR WHEN EXPOSED TO WEATHER. USE SIMPSON STRONGTIE CONNECTORS OR EQUIVALENT. USE GALVANIZED FASTENERS AS PER MANUFACTURER'S RECOMMENDATIONS.

   WOOD AND TIMBER CONSTRUCTION SHALL CONFORM TO PROJECT SPECIFICATIONS AND AMERICAN INSTITUTE OF TIMBER CONSTRUCTION (AITC) STANDARDS

   WOOD CONSTRUCTION SHALL CONFORM TO CHAPTER 23, OF THE INTERNATIONAL BUILDING CODE (UNLESS OTHERWISE NOTED). ALL NAILING SHALL CONFORM TO TABLE FOR "NAILING SCHEDULE" OF THE INTERNATIONAL BUILDING CODE UNLESS OTHER REQUIREMENTS NOTED ON THE PLAN ARE MORE STRICT. HOLES IN SAWN LUMBER SHALL BE AS SPECIFIED IN THE INTERNATIONAL BUILDING CODE.

   FRAMING LUMBER SHALL CONFORM WITH THE PROVISIONS OF THE AMERICAN SOFTWOOD LUMBER STANDARD PS-20-70 AND EACH PIECE SHALL BEAR THE GRADE STAMP OF A GRADING AGENCY APPROVED BY THE AMERICAN LUMBER STANDARDS COMMITTEE. ALL FRAMING LUMBER 2" AND LESS IN THICKNESS SHALL BE SEASONED TO A MOISTURE CONTENT OF 19% OR LESS PRIOR TO SURFACING WITH THE INDICATION "S-DRY" ON THE GRADE STAMP.

   DIMENSION LUMBER SHALL BE NUMBER 2 HF UNLESS INDICATED OTHERWISE ON THE PLANS.

   ROOF BEAMS AND GIRDERS SHALL HAVE FULL HORIZONTAL BEARING OF THE MEMBER OVER SUPPORT UNLESS OTHERWISE SHOWN. DO NOT OVERCUT.

   NO NOTCHING OF STUDS, RAFTERS, OR BEAMS IS PERMITTED WITHOUT THE ENGINEERS APPROVAL. HOLES BORED IN THE STUD OR RAFTERS SHALL BE IN THE MIDDLE ONE-THIRD OF THE DEPTH AND THE DIAMETER OF ANY SUCH HOLE SHALL NOT EXCEED ONE-FOURTH THE DEPTH.

   THE CONTRACTOR SHALL PROVIDE TEMPORARY DIAGONAL LATERAL AND CROSS BRACING UNTIL ROOF SHEATHING, CEILINGS AND PERMANENT BRACING CAN BE APPLIED AND SHEAR WALLS COMPLETED.

10. SPECIAL CONDITIONS
    CONTRACTOR SHALL VERIFY ALL DIMENSIONS IN FIELD AND SHALL PROVIDE ADEQUATE SHORING AND BRACING OF ALL STRUCTURAL MEMBERS DURING CONSTRUCTION IN ACCORDANCE WITH ALL NATIONAL, STATE AND LOCAL SAFETY ORDINANCE. ANY DEVIATION MUST BE SHALL NOTIFY ENGINEER OF ALL FIELD CHANGES PRIOR TO INSTALLATION.

11. INSPECTION,TESTING, AND OBSERVATION
    SPECIAL INSPECTION AND TESTING REQUIRED PER IBC CHAPTER 17 AND BY AN INDEPENDENT TESTING LAB OR QUALIFIED LICENSED ENGINEER FOR THE FOLLOWING:

    FOUNDATIONS: REINFORCEMENT
    VERIFY THAT ALL REINFORCING IS PLACED IN ACCORDANCE WITH APPROVED PLANS. CHECK FOR REQUIRED COVER, SIZE AND GRADE.

    ANCHOR BOLTS LOCATION, EMBEDMENT, SIZE, TYPE.

    CONCRETE: REINFORCEMENT PLACEMENT PRIOR TO CONCRETE DELIVERY; DURING TAKING OF SPECIMENS; PRIOR TO GROUTING; STRESSED SKIN PANEL ANCHORS AND TIE DOWN ANCHORS AND HOLDOWN INSTALLATION; INSPECT DIAMETER, EMBEDMENT, LOCATION, NUT/PLATE ON EMBEDDED END.

    WOOD LATERAL SYSTEM: PRIOR TO COVER: ROOF NAILING, STRESSED SKIN PANEL NAILING, BOTTOM PLATE NAILING, TOP PLATE CONNECTIONS, ANCHOR BOLTS SPACING, WASHERS, STRAPS & TIEDOWN ANCHORS. SILL PLATES. FRAMING @ ABUTTING PANEL EDGES WHERE REQUIRED IN PANELS.

12. ROOF AND WALL PANELS SHALL BE STRESSED-SKIN PANELS AS APPROVED BY THE MANUFACTURER. PANEL MANUFACTURER MUST BE IN BUSINESS FOR AT LEAST 5 YEARS.

    MANUFACTURER MUST PROVIDE AN ICBO EVALUATION REPORT FOR THE PANELS THAT INCLUDES ALLOWABLE LOADS AND STRESSES, FIRE RATING, INSULATING VALUES, ETC.

    MANUFACTURER MUST PROVIDE STRUCTURAL CALCULATIONS STAMPED BY AN ENGINEER REGISTERED IN THE STATE OF ALASKA. PROVIDE CALCULATIONS AND SHOP DRAWINGS TO ENGINEER OF RECORD FOR REVIEW.

    STRESSED SKIN PANELS MUST BE FACTORY-ASSEMBLED PANELS CONSISTING OF PRESSURE-TREATED PLYWOOD FACINGS AND A FOAMED-IN-PLACE EXPANDED POLYURETHANE CORE OR APPROVED EQUAL. PANELS MUST BE INSPECTED PER ICBO REQUIREMENTS.

    MATERIALS:

    CORE: POLYURETHANE FOAM PLASTIC CORE MATERIAL PER ICBO REPORT. FOAM PLASTIC MUST HAVE A MAXIMUM FLAME-SPREAD RATING AND SMOKE-DEVELOPED RATING IN ACCORDANCE W/ IBC STANDARDS.

    MINIMUM R-VALUES: 6" PANELS = R44, 8" PANELS = R60

    INSTALLATION PER MANUFACTURER AND ICBO REQUIREMENTS:

    THE PANELS ARE FIELD-JOINED TOGETHER TO FORM A SOLID WALL OR ROOF BY MEANS OF THE TONGUE-AND-GROOVE LONGITUDINAL PANEL-EDGE SYSTEM, WHICH ALLOWS EACH PANEL TO BE POSITIVELY ATTACHED INTO THE ADJACENT PANEL THROUGH ATTACHMENT OF THE FACING MATERIAL OF EACH ADJOINING PANEL TO THE FRAMING MEMBERS EMBEDDED IN THE FOAM CORE. ALL FASTENERS MUST HAVE SUFFICIENT LENGTH TO PENETRATE AT LEAST 1" INTO THE MAIN MEMBER.

    FIELD-INSTALLED TOP AND BOTTOM PLATES ARE DIMENSIONAL LUMBER, SIZED TO MATCH THE CORE THICKNESS AND FASTENED TO THE PANEL FACING USING THE MINIMUM SIZE FASTENERS AND SPACING SPECIFIED. A COMPATIBLE CAULK OR PANEL ADHESIVE IS APPLIED ALONG BUTTING POLYURETHANE FOAM CORE SURFACES AND ANY DIMENSIONAL LUMBER SURFACES, AND ALONG THE BOTTOM OF THE PANEL BASE PLATE BEFORE PANEL PLACEMENT.

    OPENINGS: OPENINGS MUST CONSIST OF LUMBER HEADERS AND ASSOCIATED FRAMING DESIGNED BY MANUFACTURER'S ENGINEER IN ACCORDANCE WITH THE IBC.

    BUILDING INSULATION AND VENTILATION MUST BE PROVIDED BY THE BUILDING SHELL MANUFACTURER IN ACCORDANCE WITH IBC AND LOCAL BUILDING CODES.

    SEE ARCHITECTURAL DRAWINGS FOR INTERIOR AND EXTERIOR FINISHES AND ROOFING.

    FASTENERS: USE GALVANIZED FASTENERS AS PER MANUFACTURER'S RECOMMENDATIONS OR PER ICBO EVALUATION REPORT.

HOLDOWN SCHEDULE

SIZE	POST/CHORD	ANCHOR DIA.	MIN. EMBEDMENT INTO CONC.

SAMPLE

NOTE: THIS TABLE IS TO BE PROVIDED BY THE BUILDING MANUFACTURER.

ABBREVIATIONS:

@	AT
ℙ	PLATE
'	FEET
"	INCHES
EA	EACH
OC	ON CENTER
TYP	TYPICAL
W/	WITH
DWG	DRAWING
UNO	UNLESS NOTED OTHERWISE
P.T.	PRESSURE TREATED
THK	THICK

04/27/11

Bratslavsky CONSULTING ENGINEERS, INC.
500 W 27th AVE., SUITE A
ANCHORAGE, ALASKA 99503
WWW.BCE-AK.COM
PHONE (907) 272-5264
FAX (907) 272-5214

RECORD DRAWING CERTIFICATE
THESE DRAWINGS REFLECT RECORDED INFORMATION OBTAINED DURING CONSTRUCTION. INFORMATION PROVIDED HEREIN IS ACCURATE TO THE BEST OF MY KNOWLEDGE.
NAME DATE

SCALE:
BAR IS ONE INCH ON ORIGINAL DRAWING
IF NOT ONE INCH ON THIS SHEET, ADJUST SCALES ACCORDINGLY

CONSTRUCTION RECORD
FIELD BOOK
STAKING
FOREMAN
AS-BUILT
INSPECTOR

STATE OF ALASKA
49th
Taras G. Bratslavsky
CE-8970
REGISTERED PROFESSIONAL ENGINEER
04/27/2011

2009 WATER SYSTEM UPGRADES
GENERAL STRUCTURAL NOTES
ATKA, ALASKA

CE2 ENGINEERS, INC.

REVISION	BY	DATE
1 REVISIONS	MCB	021011

Project No. ____
Date SEPT 2009
Designed LAP
Drawn MCB
Approved LAP

Sheet No.
S1.0

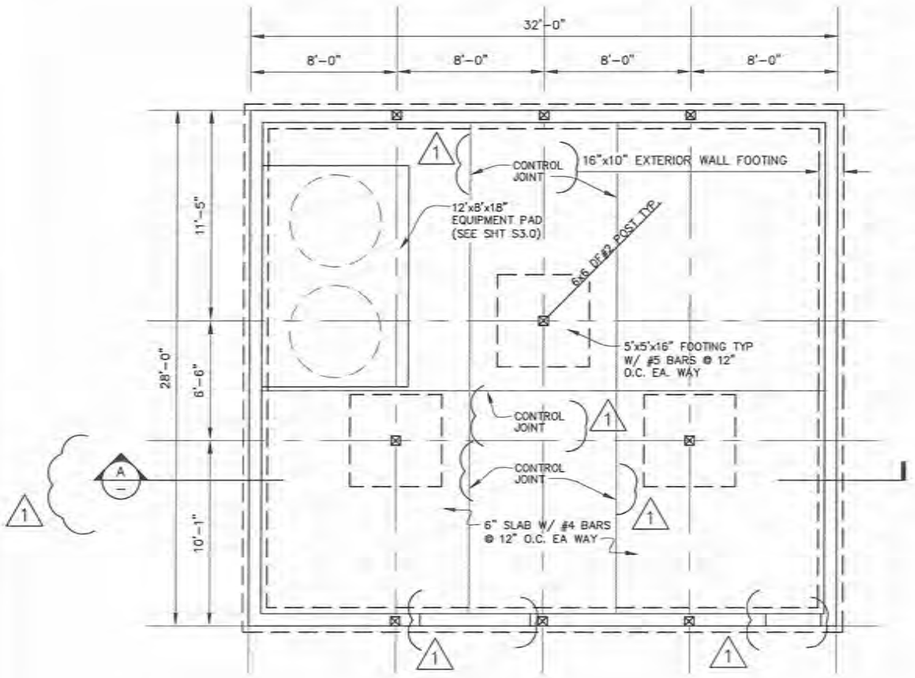

1 FOUNDATION PLAN

SCALE: 1/4" = 1'-0"

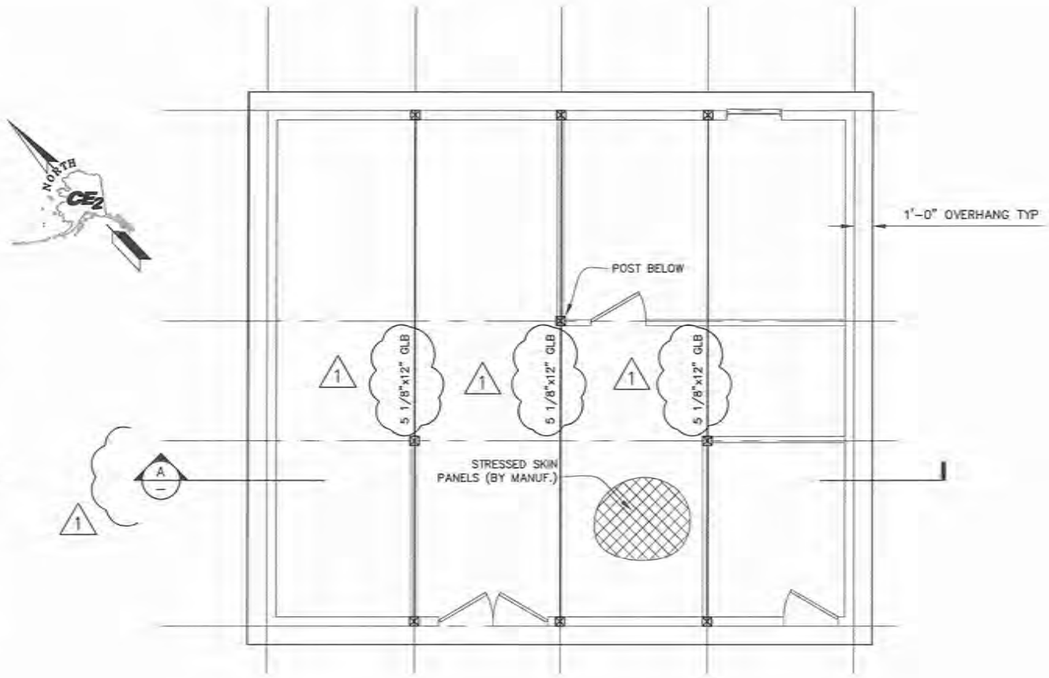

2 ROOF FRAMING PLAN

SCALE: 1/4" = 1'-0"

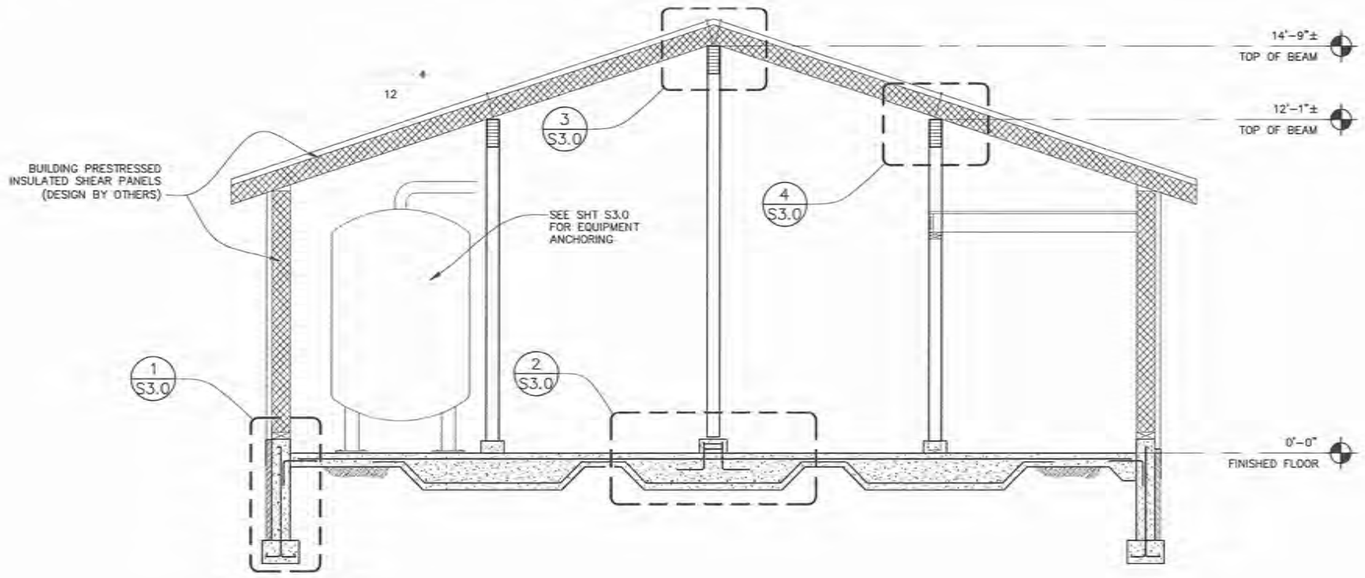

A BUILDING SECTION

SCALE: 3/8" = 1'-0"

04/27/11

BCE Bratslavsky CONSULTING ENGINEERS, INC.
500 W 27th AVE., SUITE A
ANCHORAGE, ALASKA 99503
WWW.BCE-AK.COM
PHONE (907) 272-5264
FAX (907) 272-5214
mcb@bce-ak.com

RECORD DRAWING CERTIFICATE
THESE DRAWINGS REFLECT RECORDED INFORMATION OBTAINED DURING CONSTRUCTION. INFORMATION PROVIDED HEREIN IS ACCURATE TO THE BEST OF MY KNOWLEDGE.
NAME
DATE

SCALE:
BARS ONE INCH ON ORIGINAL DRAWING
IF NOT ONE INCH ON THIS SHEET, ADJUST SCALES ACCORDINGLY

CONSTRUCTION RECORD
FIELD BOOK
STAKING
FOREMAN
AS-BUILT
INSPECTOR

STATE OF ALASKA — REGISTERED PROFESSIONAL ENGINEER — Wayne C. Bratslavsky — 04/27/2011

2009 WATER SYSTEM UPGRADES
PLANS AND SECTION
ATKA, ALASKA

CE2 ENGINEERS, INC.

REVISION	BY	DATE
1 REVISIONS	MCB	021011

Project No.
Date SEPT 2009
Designed LAP
Drawn MCB
Approved LAP

Sheet No.
S2.0

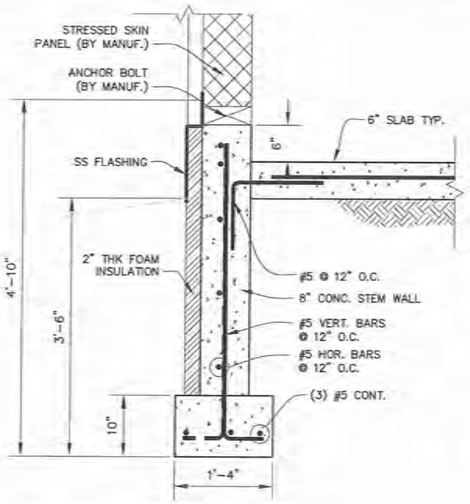

1 WALL FOOTING DETAIL
SCALE: 1" = 1'-0"

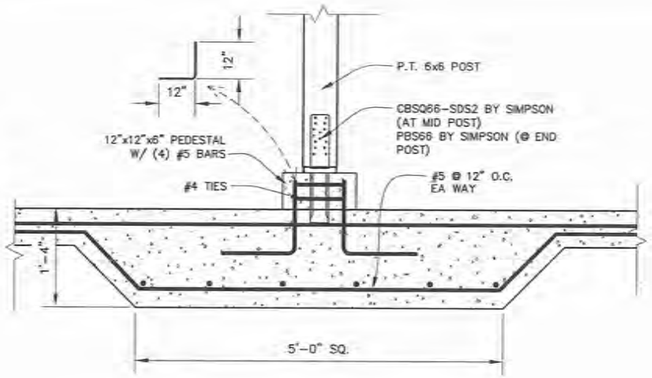

2 INTERIOR FOOTING DETAIL
SCALE: 1" = 1'-0"

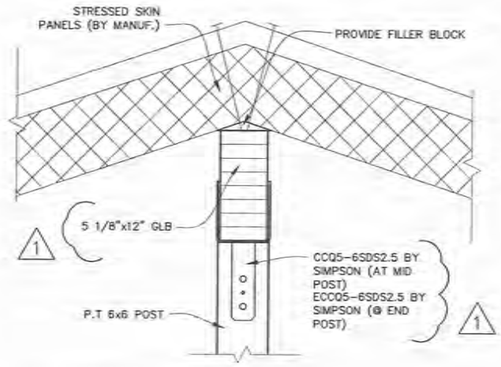

3 FRAMING DETAIL
SCALE: 1 1/2" = 1'-0"

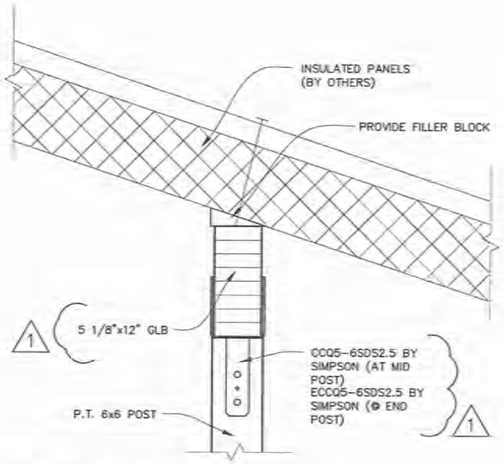

4 FRAMING DETAIL
SCALE: 1 1/2" = 1'-0"

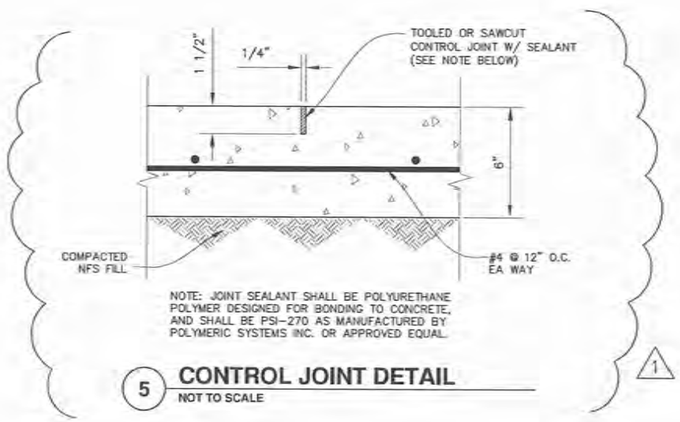

5 CONTROL JOINT DETAIL
NOT TO SCALE

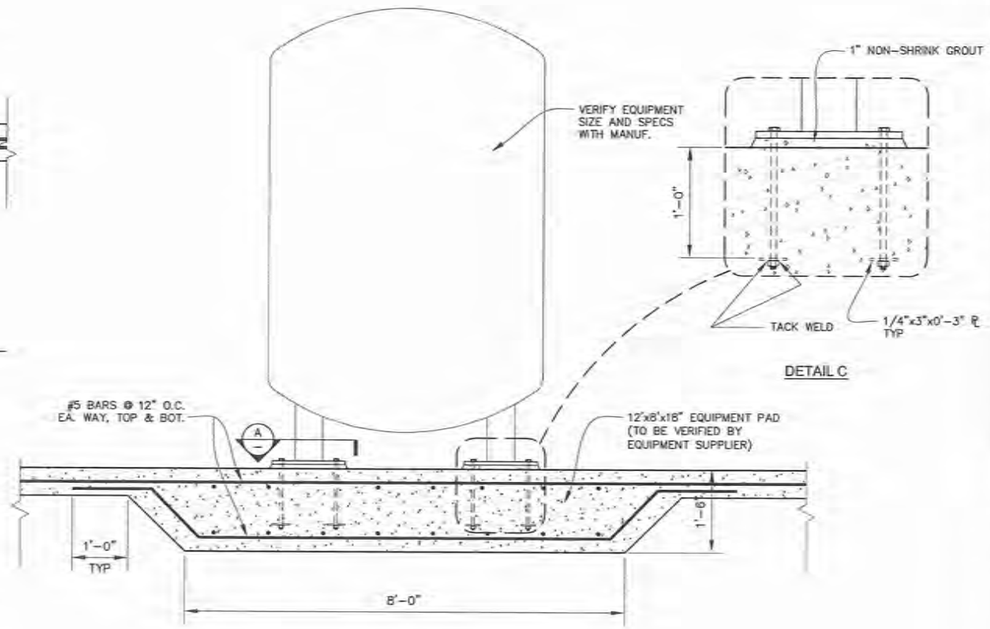

6 EQUIPMENT SUPPORT DETAIL
SCALE: 3/4" = 1'-0"

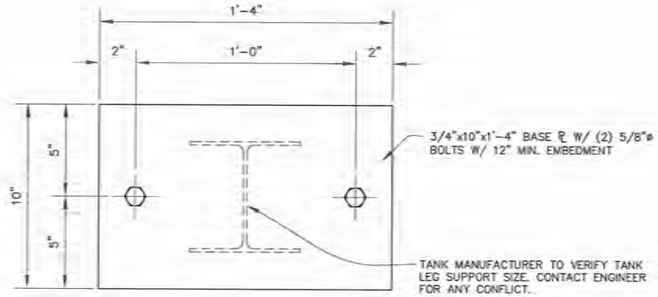

1 NOTES:
1. SEE MECHANICAL FOR BASE PLATE LOCATIONS.
2. SEE MECHANICAL FOR PIPE SUPPORT LOCATIONS.

A BASE PLATE DETAIL (TYP. @ EQUIP. LEGS)
SCALE: 3" = 1'-0"

04/27/11

BCE Bratslavsky CONSULTING ENGINEERS, INC.
500 W 27th AVE., SUITE A
ANCHORAGE, ALASKA 99503
WWW.BCE-AK.COM
PHONE (907) 272-5264
FAX (907) 272-5214
mail@bce-ak.com

RECORD DRAWING CERTIFICATE
THESE DRAWINGS REFLECT RECORDED INFORMATION OBTAINED DURING CONSTRUCTION. INFORMATION PROVIDED HEREIN IS ACCURATE TO THE BEST OF MY KNOWLEDGE.
NAME
DATE

SCALE:
DATE IS DIE PRESS OF ORIGINAL DRAWING
IF NOT ONE INCH ON THIS SHEET ADJUST SCALES ACCORDINGLY

CONSTRUCTION RECORD
FIELD BOOK
TAKING
FOREMAN
AS-BUILT
INSPECTOR

STATE OF ALASKA
Mark C. Bratslavsky
REGISTERED PROFESSIONAL ENGINEER
04/27/2011

2009 WATER SYSTEM UPGRADES

DETAILS

ATKA, ALASKA

CE2 ENGINEERS, INC.

REVISION	BY	DATE
1 REVISIONS	MCB	02/01/11

Project No. —
Date — SEPT 2009
Designed — LAP
Drawn — MCB
Approved — LAP

Sheet No.
S3.0

ATKA WATER SYSTEM UPGRADE OPERATIONAL NARRATIVE

OPERATIONAL NARRATIVE (NUMBERS IN PARENTHESIS REFER TO CIRCLED NUMBERS IN PROCESS DIAGRAM, SHEET M1.1)

RAW WATER IS IMPOUNDED BEHIND A SMALL DAM. THE WATER IS COLLECTED USING A SCREEN WITH 0.06" SLOT OPENINGS, AND WILL FLOW TO THE WATER TREATMENT PLANT THROUGH A 4" BURIED PIPELINE, (1). BOOST PUMP BP-1 PUMPS 40 GPM THROUGH FILTER PROCESS, (2). AFTER TREATMENT, THE WATER FLOWS INTO A 130,300 GALLON WATER STORAGE TANK (WT-1).

THE WATER TREATMENT PLANT IS CONFIGURED FOR CONTINUOUS OPERATION WITH MANUAL SHUTDOWN BASED ON FILTER BREAK-THROUGH, AS INDICATED BY ELEVATED TURBIDITY OF THE TREATED WATER. THE FILTRATION PROCESS WILL BE MANUALLY SHUT DOWN WHEN THE WATER STORAGE TANK IS FULL.

COAGULANT WILL BE INJECTED AS PART OF THE TREATMENT PROCESS, (3) FOLLOWED BY FLOW THROUGH TWO 5-FOOT DIAMETER MULTIMEDIA PRESSURE FILTERS OPERATING IN PARALLEL, (4). THE TREATED WATER WILL BE STORED IN A 130,300 GALLON WATER STORAGE TANK WT-1, (9). THE ELEVATION HEAD OF THE TANK WILL PROVIDE THE DISTRIBUTION SYSTEM PRESSURE.

2XX SERIES-PRE-FILTRATION TREATMENT

PUMP OPERATION:

A 1.0 HORSEPOWER STAINLESS STEEL MULTI-STAGE PUMP MULTI-STAGE WILL BOOST FLOW FROM THE WATER SOURCE TO APPROXIMATELY 40 GPM AT 60 FT. OF HEAD TO PUSH THE WATER THROUGH THE FILTRATION SYSTEM AND INTO THE WATER STORAGE TANK WT-1, (2).

WHEN THE MULTIMEDIA FILTERS FIRST COME ON LINE, FILTERED WATER FLOWS THROUGH VALVE V-2 TO WASTE FOR APPROXIMATELY 10 MINUTES TO CONDITION THE FILTER MEDIA, (6). TURBIDMETER TU-2 WILL BE MONITORED TO ENSURE THAT THE FILTERS WERE PROPERLY BACKWASHED AND CONDITIONED. WHEN THE COMBINED FILTER EFFLUENT IS WITHIN THE REQUIRED VALUES, FILTER TO STORAGE VALVE V-3 WILL BE OPENED AND FILTER TO WASTE VALVE V-2 WILL BE CLOSED. WATER WILL THEN FLOW INTO STORAGE TANK WT-1. CONTROL VALVE CV-2 WILL BE ADJUSTED MANUALLY BY THE OPERATOR TO MAINTAIN FLOW AT 40 GPM (OR OTHER DESIRED VALUE UP TO 50 GPM) BASED ON READINGS OF TOTALIZING METER M-2.

BACKWASH PUMP BW-1 CAN BE USED TO CLEAN THE INTAKE SCREEN AT THE RESERVOIR BY RUNNING POTABLE WATER THROUGH THE RAW WATER LINE TOWARD THE 0.06" SLOTTED INTAKE SCREEN, (12).

METER M-1 RECORDS THE RAW WATER FLOW.

TURBIDMETER TU-1 MEASURES THE RAW WATER TURBIDITY AS A REFERENCE FOR ASSESSING THE EFFECTIVENESS OF THE TREATMENT PROCESS.

COAGULANT ADDITION:

COAGULANT USED IN THE TREATMENT PROCESS WILL BE MIXED IN A VAT, OR USED NEAT, (3). STATIC MIXER SM-1 BLENDS COAGULANT FROM COAGULANT FEED PUMP CF-1. STREAMING CURRENT DETECTOR SCD-1 WILL MEASURE THE NET CHARGE OF THE CONTAMINANTS AND COAGULANTS IN THE WATER, AND ADJUST CF-1 TO FEED THE OPTIMUM AMOUNT OF COAGULANT INTO THE PROCESS STREAM. THE COAGULANT DOSAGE WILL VARY AS REQUIRED TO ACHIEVE PROPER COAGULATION, BUT WILL TYPICALLY BE APPROXIMATELY 3 PPM. SCD-1 WILL SEND A 4-20 mA SIGNAL TO COAGULANT FEED PUMP CF-1 TO MAINTAIN A PREDETERMINED SETPOINT. THE SETPOINT CAN BE CHANGED BY THE OPERATOR, BASED ON JAR TESTING RESULTS.

SCD-1 AND CF-1 ARE TURNED ON AND OFF BY FLOW SWITCH FS-1.

3XX SERIES - FILTER BACKWASH AND AIR SCOUR

GAUGES DP-1 AND DP-2 WILL MONITOR DIFFERENTIAL PRESSURE ACROSS PRESSURE FILTERS PF-1 AND PF-2 RESPECTIVELY.

FILTER BACKWASH WILL BE INITIATED MANUALLY BY THE OPERATOR, (5). THE PROCEDURE FOR BACKWASHING FILTER PF-1 FOLLOWS (PF-2 SIMILAR):

1. BOOST PUMP BP-1 IS SHUT DOWN.
2. ALL VALVES ARE CLOSED.
3. DRAIN DOWN VALVE V-12 IS OPENED ALLOWING THE WATER TO DRAIN DOWN FROM THE HEADSPACE IN THE TANK ABOVE THE FILTER MEDIA.
4. AFTER THE WATER IS DRAINED DOWN, AIR SCOUR VALVE V-14 IS OPENED AND THE AIR SCOUR BLOWER AB-1 IS TURNED ON FOR APPROXIMATELY 2 MINUTES. AIR BUBBLES WILL RISE THROUGH THE FILTER MEDIA, AGITATING THE SAND AND ANTHRACITE LAYERS TO BREAK LOOSE THE TRAPPED CONTAMINANTS. THE OPERATOR WILL MONITOR THE MEDIA SCOURING ACTION THROUGH THE FILTER VESSEL WINDOW AND ADJUST THE AIR FLOW AS NEEDED TO ACHIEVE GOOD AGITATION.
5. DRAIN DOWN VALVE V-12 AND AIR SCOUR VALVE V-14 ARE CLOSED TO COMPLETE THE AIR SCOUR STEP.
6. BACKWASH VALVES V-13 AND V-11 ARE OPENED.
7. BACKWASH PUMP BW-1 IS TURNED ON TO "SLOW FILL" SETTING (75 GPM) FOR 4 MINUTES, THEN IS TURNED TO "BACKWASH" SETTING FOR 10 MINUTES (OR OTHER TIME DESIRED).
8. BACKWASH VALVES BV-13 AND BV-11 ARE CLOSED, AND BACKWASH PUMP BW-1 IS SHUT OFF AFTER THE BACKWASH OPERATION IS COMPLETE.

FLOW METER M-4 WILL MEASURE THE FLOW OF BACKWASH WATER THROUGH THE PRESSURE FILTERS.

BACKWASH WATER WILL FLOW INTO THE BACKWASH WATER DISCHARGE BASIN WHERE COAGULANT AND CONTAMINANTS WILL BE ALLOWED TO SETTLE OUT BEFORE THE BACKWASH WATER IS DISCHARGED.

4XX SERIES - POST-FILTRATION TREATMENT

CHEMICAL FEED PUMP CF-2 WILL INJECT A HYPOCHLORITE DISINFECTANT SOLUTION, STORED IN THE SOLUTION TANK, INTO THE FILTER EFFLUENT (8). THE DISINFECTANT DOSAGE WILL BE INITIALLY ADJUSTED BY THE OPERATOR, BUT A 4-20MA SIGNAL FROM FLOW METER M-2 WILL PACE CF-2.

FLOW SWITCH FS-2 WILL TURN ON AND OFF CF-2.

5XX SERIES - WATER STORAGE TANK AND DISTRIBUTION SYSTEM

TREATED WATER WILL BE STORED IN AN INSULATED 130,300 GALLON BOLTED-AND-GASKETED WATER TANK, (9). TANK DIMENSIONS ARE APPROXIMATELY 34-FT. DIAMETER X 24-FT. HIGH. AN INSULATED 4-IN. HDPE X 12-IN. ALUMINUM JACKET ARCTIC PIPE WILL SUPPLY THE TANK. A 12-IN. X 18-IN. ALUMINUM JACKET ARCTIC PIPE WILL BE USED TO DRAW WATER FROM THE TANK. A VORTEX BREAKER ON THE TANK END OF THE 12X18 ARCTIC PIPE WILL SERVE AS A SUCTION.

TANK WT-1 ALSO SERVES AS THE DISINFECTANT CONTACT TANK FOR THE TREATMENT PROCESS, SUPPLYING 1-LOG INACTIVATION OF GIARDIA CYSTS AND 4-LOG INACTIVATION OF VIRUSES.

STATIC LEVEL OF WATER IN THE TANK WILL BE MEASURED USING ALTITUDE GAUGE PG-2. A TABLE MOUNTED NEAR PG-2 WILL CONVERT GAUGE READINGS TO GALLONS OF WATER REMAINING IN TANK.

TANK FILL AND DRAW LINES WILL BE EQUIPPED WITH FREEZE PROTECTION CIRCULATING PUMP CP-1. PUMP CP-1 WILL OPERATE DURING FREEZING TEMPERATURES WHEN FLOW SWITCH FS-2 REGISTERS NO FLOW.

BURIED 8-IN. HDPE PIPING WILL DISTRIBUTE POTABLE WATER FROM WT-1 TO CUSTOMERS BY GRAVITY FLOW, (11). FLOW METER M-4 WILL REGISTER GALLONS OF WATER SUPPLIED TO THE DISTRIBUTION SYSTEM. VACUUM BREAKER VB-1 WILL PROTECT THE WATERMAIN FROM NEGATIVE PRESSURES IF THE WATER SUPPLY IS BE SHUT OFF AND DRAINED.

RECORD DRAWING CERTIFICATE
THESE DRAWINGS REFLECT RECORDED INFORMATION OBTAINED DURING CONSTRUCTION. INFORMATION PROVIDED HEREIN IS ACCURATE TO THE BEST OF MY KNOWLEDGE.
NAME _____ DATE _____

SCALE AS SHOWN

CONSTRUCTION RECORD
FIELD BOOK
STAKING
FOREMAN
AS-BUILT
INSPECTOR

STATE OF ALASKA — 49TH — JAMES A. PETERSON — 12/31/2010

2009 WATER SYSTEM UPGRADES

WATER TREATMENT PROCESS OPERATIONAL NARRATIVE

ATKA, ALASKA

CE2 ENGINEERS, INC.
PO BOX 232940 ANCHORAGE, AK 99523 PH: 907-349-1010 FAX: 907-349-1015

REVISION	BY	DATE

Project No: ____ Date: MAY 2010
Designed: LAP
Drawn: ____
Approved: LAP

Sheet No: M1.0

G:\ACAD\ATKA\2009 Water System Upgrades\M1.0 Narrative.dwg, 5/3/2011 2:26:36 PM, Flash, LANIER MP C2050_LD520C PCL 6BLK WHIT.pc3

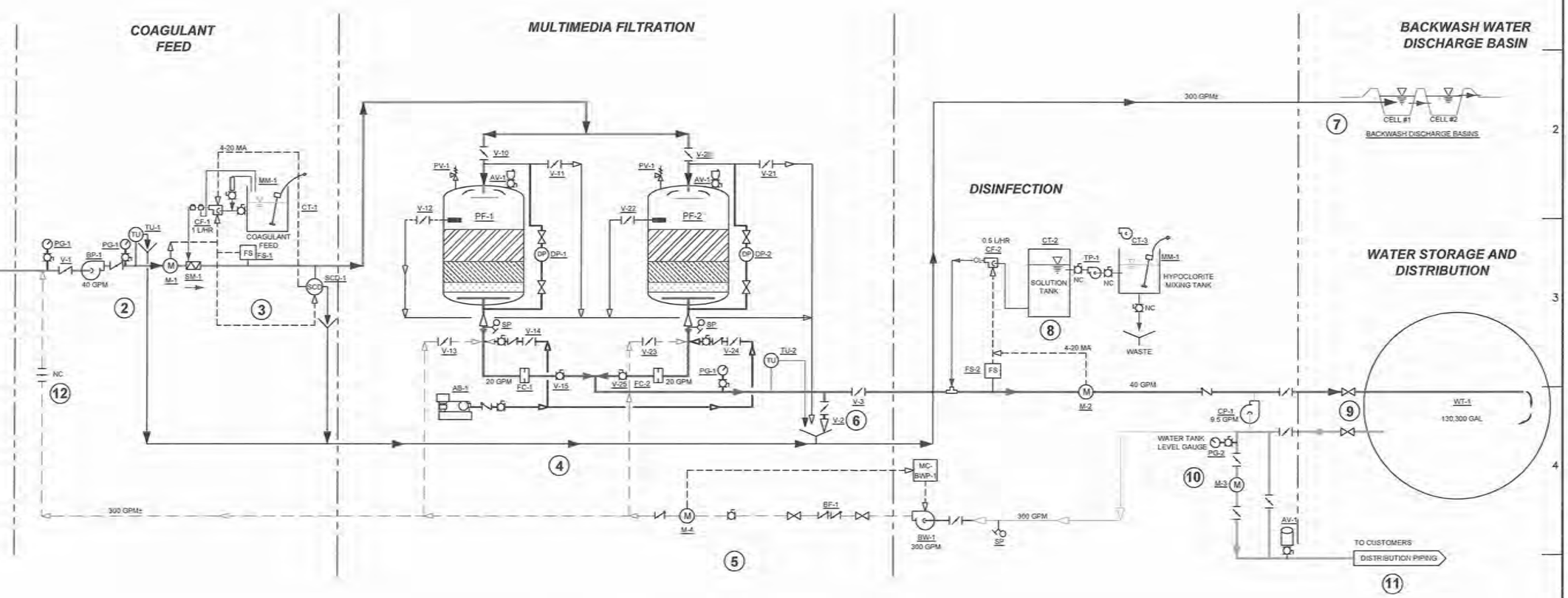

WATER TREATMENT PROCESS DIAGRAM

NOTE: FOR PROCESS NARRATIVE TEXT, SEE SHEET M1.0

LEGEND

- CONTROL LINK
- POTABLE WATER
- BACKWASH IN
- PROCESS WATER
- BACKWASH OUT
- CHEMICAL FEED
- AIR SCOUR
- SM-# STATIC MIXER
- AB-# AIR BLOWER
- AV-# AIR AND VACUUM RELIEF VALVE
- BF-# BACKFLOW PREVENTOR
- CF-# CHEMICAL FEED PUMP
- CP-# CIRCULATION PUMP
- CT-# CHEMICAL TANK
- CV-# CONTROL VALVE
- DP DIFFERENTIAL PRESSURE INDICATOR
- FC-# FLOW CONTROL
- FM-# FLOW METER
- FS-# FLOW SWITCH
- MPFCP MAIN PRESSURE FILTER CONTROL PANEL
- LC-# LEVEL CONTROL
- MM-# MOTORIZED MIXER
- M-# METER
- N.C. NORMALLY CLOSED VALVE
- PF-# PRESSURE FILTER
- PG-# PRESSURE GAUGE
- PT-# MULTIMEDIA PRESSURE FILTER
- PV-# PRESSURE RELIEF VALVE
- SCD-# STREAMING CURRENT DETECTOR
- SM-# STATIC MIXER
- SP SAMPLE PORT
- TH-# THERMOMETER
- TM-# TURBIDIMETER
- TU-# TURBIDY SENSOR
- VB-# VACUUM BREAKER
- WT-# WATER TANK

RECORD DRAWING CERTIFICATE
THESE DRAWINGS REFLECT RECORDED INFORMATION OBTAINED DURING CONSTRUCTION. INFORMATION PROVIDED HEREIN IS ACCURATE TO THE BEST OF MY KNOWLEDGE.
NAME
DATE

SCALE: AS SHOWN

CONSTRUCTION RECORD
FIELD BOOK
STAKING
FORMAN
AS-BUILT
INSPECTOR

REVISION | BY | DATE

2009 WATER SYSTEM UPGRADES

WATER TREATMENT PROCESS DIAGRAM
ATKA, ALASKA

CE2 ENGINEERS, INC.
PO BOX 230568 ANCHORAGE, AK 99523 PH: 907-349-5105 FAX: 907-349-1015

Project No.
Date MAY 2010
Designed LAP
Drawn
Approved LAP

Sheet No.
M1.1

G:\ACAD\ATKA\2009 Water System Upgrades\M1.1 color process diagram rev1 bz.dwg, 5/3/2011 2:25:43 PM, Flash, LANIER MP COLOR.pc3

NOTES

1. FILTER ARRANGEMENT SHOWN IS SET BY DESIGN. SUPERINTENDENT TO COORDINATE EXACT FILTER PLACEMENT DURING CONSTRUCTION TO MATCH LAYOUT AND ANCHOR BOLT PATTERNS.
2. ALL EXPOSED PIPING, VALVES, AND FITTINGS SHALL BE SCHEDULE 80 PVC UNLESS SPECIFICALLY NOTED OTHERWISE BY THE PROJECT DESIGN ENGINEER.
3. DURING ASSEMBLY/INSTALLATION OF PIPING EQUIPMENT, SWIVEL-TYPE (VAN STONE) ADAPTER FLANGES SHALL BE UTILIZED AS NEEDED TO GUARANTEE ACCURATE AXIAL AND RADIAL PIPING ALIGNMENTS. ALL FLANGE BOLTS, NUTS, AND WASHERS SHALL BE 304 STAINLESS STEEL TO PREVENT CORROSION.
4. PIPE SUPPORTS SHALL BE POSITIONED ON 32-INCH CENTERING THROUGHOUT THE WTP FACILITY.
5. NO PAINT SHALL BE APPLIED TO ANY PLASTIC PIPE SEGMENTS OR FITTINGS.
6. ALL AIR-SCOUR PIPING AND FITTINGS SHALL BE HIGH DENSITY POLYETHYLENE, "AIR PRO" OR APPROVED EQUAL PIPE, 2".
7. AIR "LOADING" RATES FROM THE AIR-SCOUR BLOWER WILL INITIALLY FOLLOW INDUSTRY RECOMMENDATIONS OF 4 STANDARD CUBIC FEET PER MINUTE PER SQUARE FOOT OF CROSS-SECTIONAL FILTER BED AREA (SCFM/SF). THIS FLOW RATE IN A 60" DIA FILTER IS 76 SCFM. OPTIMAL RATES WILL BE ESTABLISHED BASED ON RESULTS AS OBSERVED DURING THE WTP START-UP PHASE.
8. FILTER REFILL FLOW RATE SHOULD BE INITIALLY SET AT 40 GPM.
9. BACKWASH FLOW RATES WILL INITIALLY FOLLOW INDUSTRY RECOMMENDATIONS OF 15 GPM PER SQUARE FOOT OF CROSS-SECTIONAL FILTER BED AREA (GPM/SF). THIS FLOW RATE IN A 60" DIA FILTER IS 295 GPM. OPTIMAL RATES WILL BE ESTABLISHED BASED ON RESULTS AS OBSERVED DURING THE WTP START-UP PHASE.

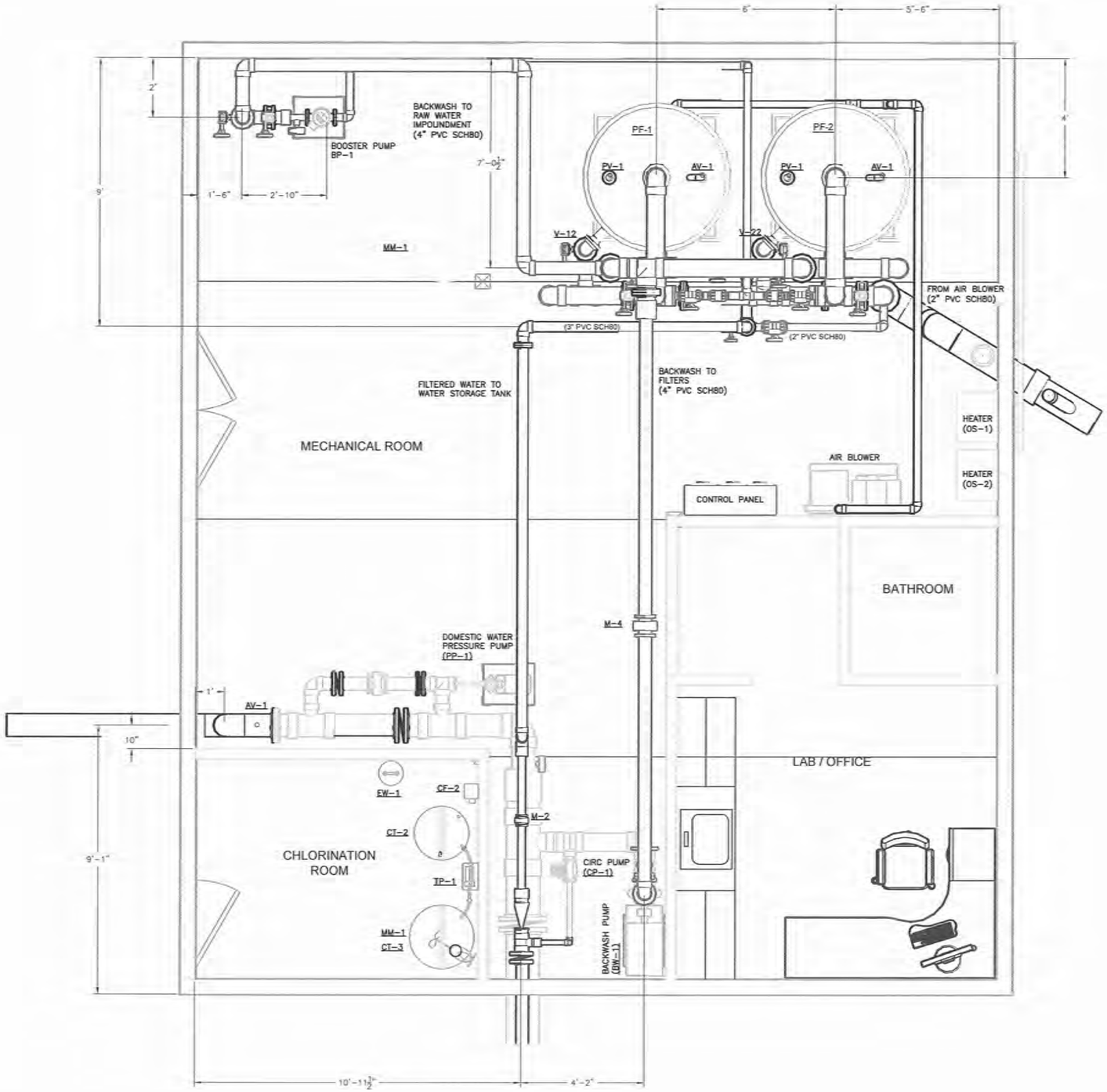

1 M2.2 MECHANICAL PIPING - PLAN
SCALE: 1/2" = 1'-0"

RECORD DRAWING CERTIFICATE
THESE DRAWINGS REFLECT RECORDED INFORMATION OBTAINED DURING CONSTRUCTION. INFORMATION PROVIDED HEREIN IS ACCURATE TO THE BEST OF MY KNOWLEDGE.
NAME
DATE

SCALE: AS SHOWN

BAR IS ONE INCH ON ORIGINAL DRAWING. IF NOT ONE INCH ON THIS SHEET ADJUST SCALE ACCORDINGLY

CONSTRUCTION RECORD
FIELD BOOK
STAKING
FOREMAN
AS-BUILT
INSPECTOR

THE STATE OF ALASKA 10TH LAP EXPIRES 12/31/2010

2009 WATER SYSTEM UPGRADES

WATER TREATMENT PLANT
MECHANICAL FLOOR PLAN

ATKA, ALASKA

CE2 ENGINEERS, INC.
PO BOX 232048 ANCHORAGE, AK 99523 PH: 907-349-1010 FAX: 907-349-1015

REVISION	BY	DATE

Project No. ___ Date MAY 2010
Designed LAP
Drawn ___
Approved LAP

Sheet No.
M2.0

G:\ACAD\ATKA\2009 Water System Upgrades\M2.0 mech plan view.dwg, 5/3/2011 2:25:02 PM, Flash, LANIER MP C2050_LD520C PCL 6BLK WHIT.pc3

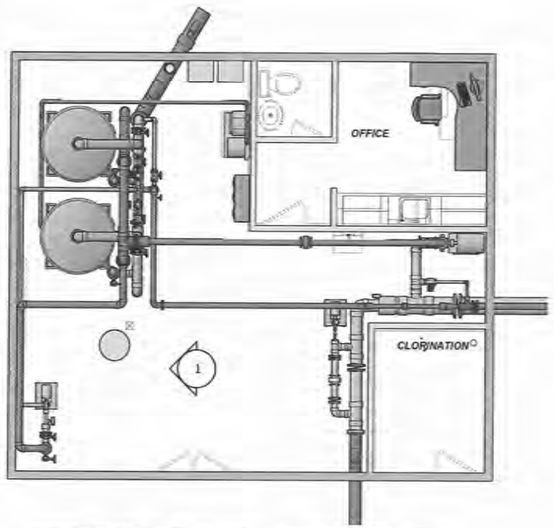

WATER TREATMENT PLANT DETAIL KEY

SCALE: NTS

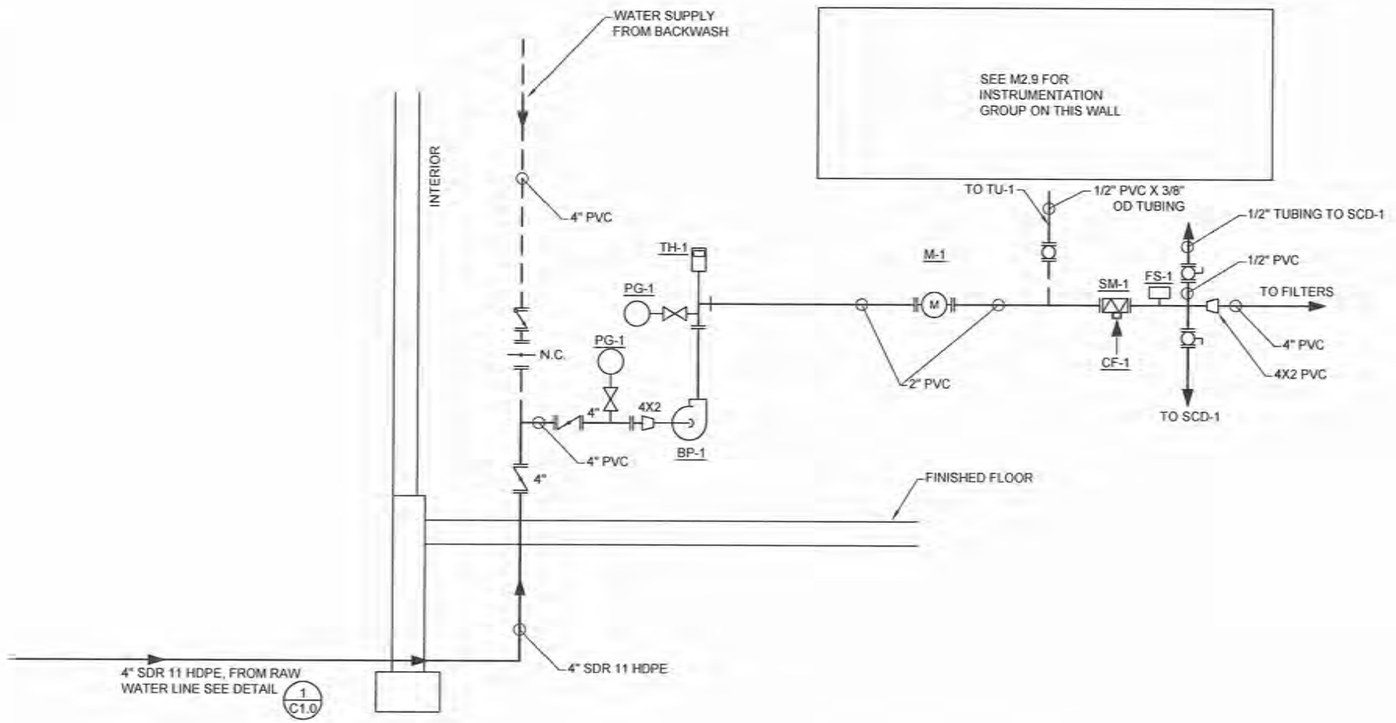

1/M2.1 WATER SUPPLY PROCESS PIPING ELEVATION

SCALE: NTS

RECORD DRAWING CERTIFICATE

THESE DRAWINGS REFLECT RECORDED INFORMATION OBTAINED DURING CONSTRUCTION. INFORMATION PROVIDED HEREIN IS ACCURATE TO THE BEST OF MY KNOWLEDGE.

NAME _____ DATE _____

SCALE: AS SHOWN

THIS IS ONE INCH ON ORIGINAL DRAWING

IF NOT ONE INCH ON THIS SHEET ADJUST SCALES ACCORDINGLY

CONSTRUCTION RECORD

FIELD BOOK

STAKING

FOREMAN

AS-BUILT

INSPECTOR

REGISTERED PROFESSIONAL ENGINEER STATE OF ALASKA

2009 WATER SYSTEM UPGRADES

WATER SUPPLY PROCESS DIAGRAM

ATKA, ALASKA

CE2 ENGINEERS, INC.

PO BOX 232948 ANCHORAGE, AK 99523 PH: 907-349-1010 FAX: 907-349-1015

REVISION	BY	DATE

Project No. _____ Date MAY 2010

Designed LAP

Drawn _____

Approved LAP

Sheet No.

M2.1

G:\ACAD\ATKA\2009 Water System Upgrades\M2.1 WATER SUPPLY schematic diagram rev 1.dwg, 2/24/2011 11:57:01 AM, Rash, LANIER MP C2050_LD520C PCL 6BLK WHIT.pc3

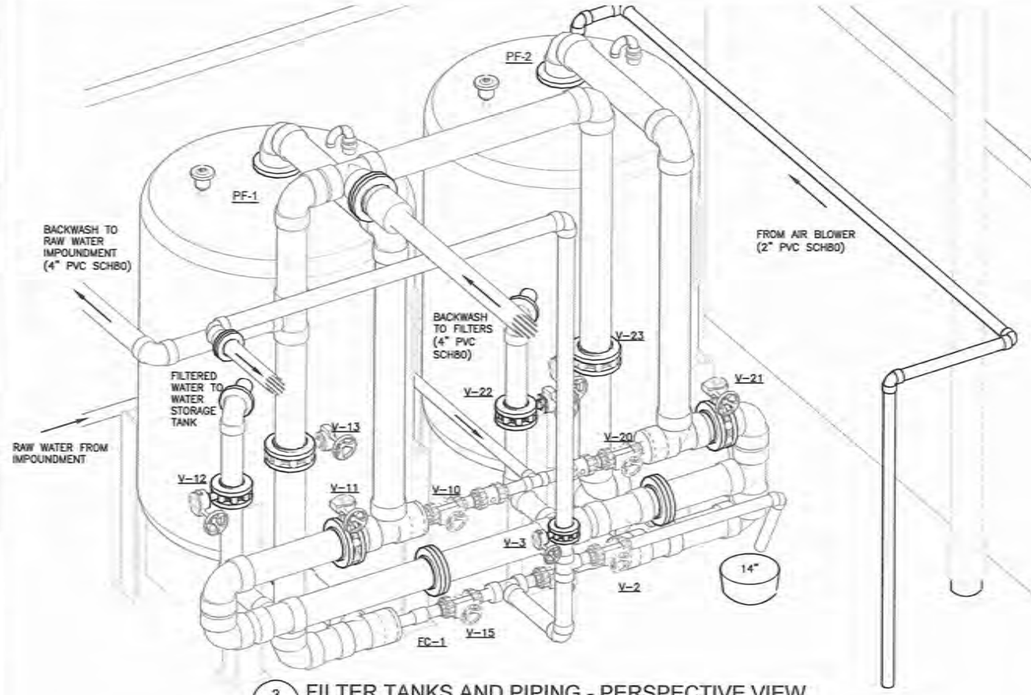

3 M2.2 FILTER TANKS AND PIPING - PERSPECTIVE VIEW
SCALE: 3/4" = 1'-0"

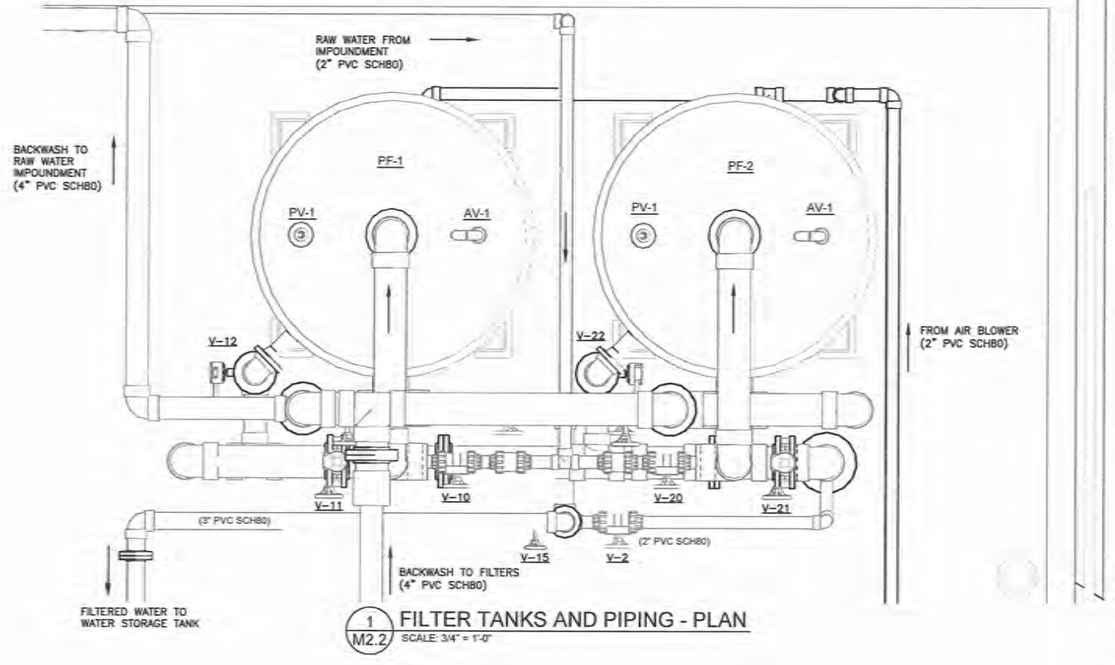

1 M2.2 FILTER TANKS AND PIPING - PLAN
SCALE: 3/4" = 1'-0"

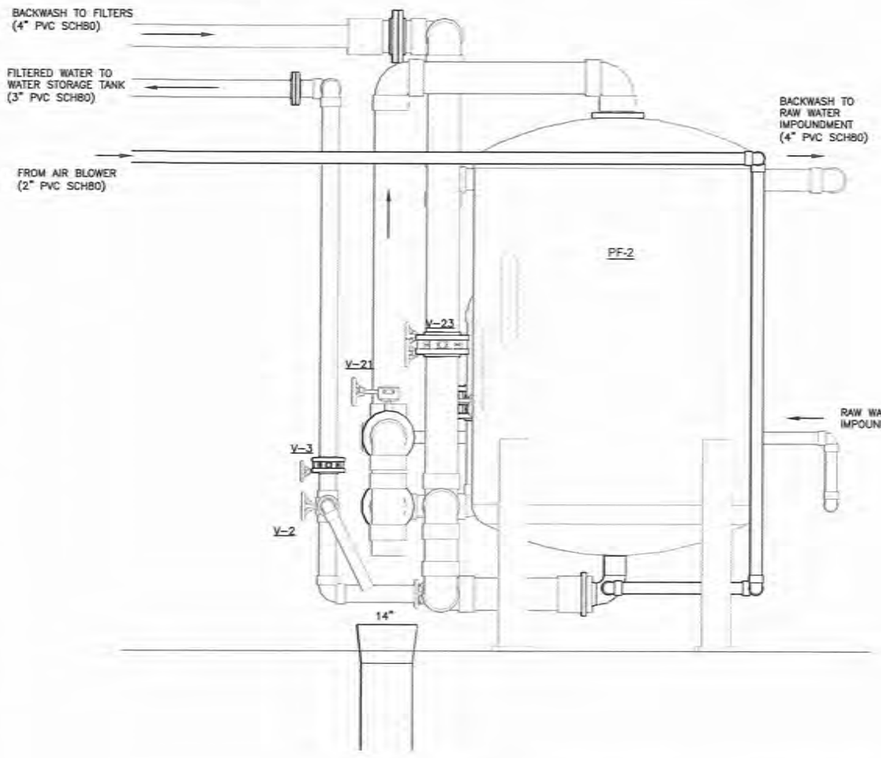

4 M2.2 FILTER TANKS AND PIPING - SIDE ELEVATION
SCALE: 3/4" = 1'-0"

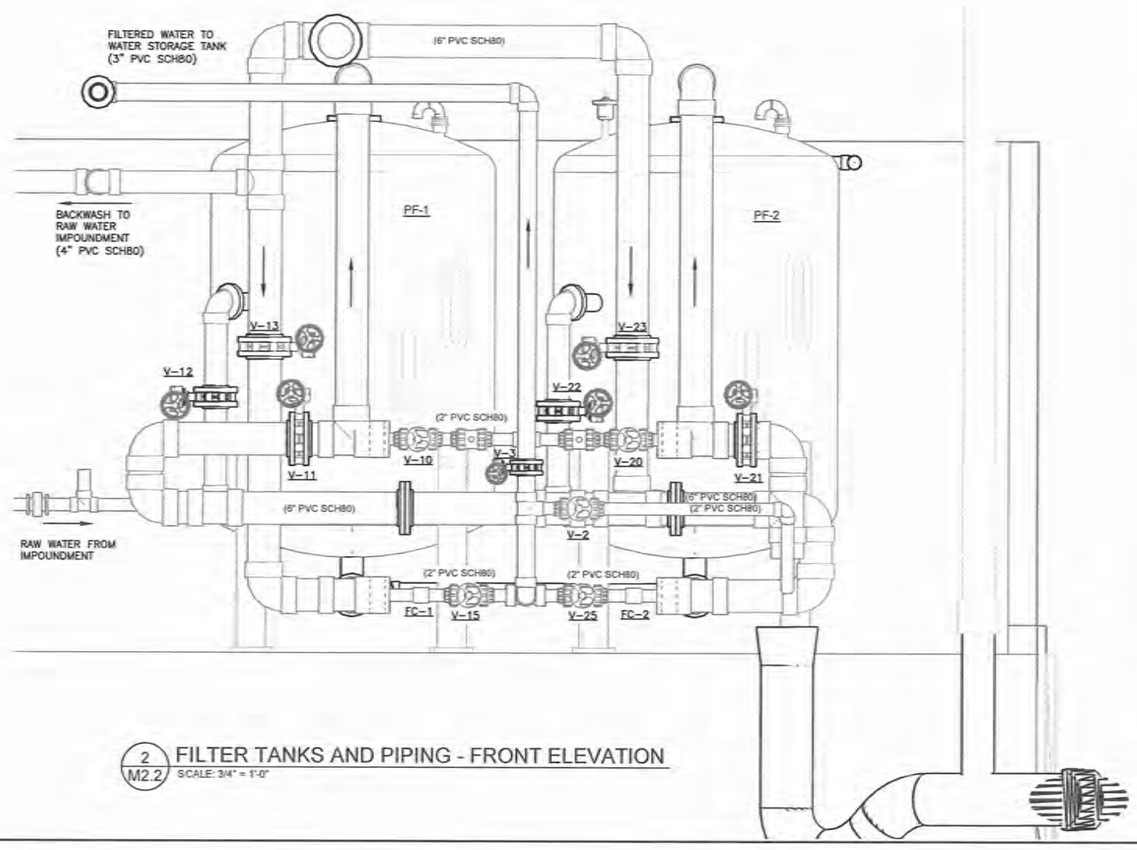

2 M2.2 FILTER TANKS AND PIPING - FRONT ELEVATION
SCALE: 3/4" = 1'-0"

RECORD DRAWING CERTIFICATE
THESE DRAWINGS REFLECT RECORDED INFORMATION OBTAINED DURING CONSTRUCTION. INFORMATION PROVIDED HEREIN IS ACCURATE TO THE BEST OF MY KNOWLEDGE.
NAME
DATE

SCALE: AS SHOWN

BAR IS ONE INCH ON ORIGINAL DRAWING. IF NOT ONE INCH ON THIS SHEET ADJUST SCALES ACCORDINGLY

CONSTRUCTION RECORD
FIELD BOOK
STAKING
FOREMAN
AS-BUILT
INSPECTOR

REGISTERED PROFESSIONAL ENGINEER STATE OF ALASKA 48 LUCAS PAUL ANDERSON

2009 WATER SYSTEM UPGRADES
PRESSURE FILTER PLAN AND ELEVATIONS
ATKA, ALASKA

CE2 ENGINEERS, INC.
PO BOX 223948 ANCHORAGE, AK 99523 PH: 907-349-1010 FAX: 907-349-1015

REVISION	BY	DATE

Project No. —
Date — MAY 2010
Designed — LAP
Drawn —
Approved — LAP

Sheet No.
M2.2

G:\ACAD\ATKA\2009 Water System Upgrades\M2.2 Filters.dwg, 5/3/2011 2:23:11 PM, Flash, LANIER MP C2050_LD520C PCL 6.pc3

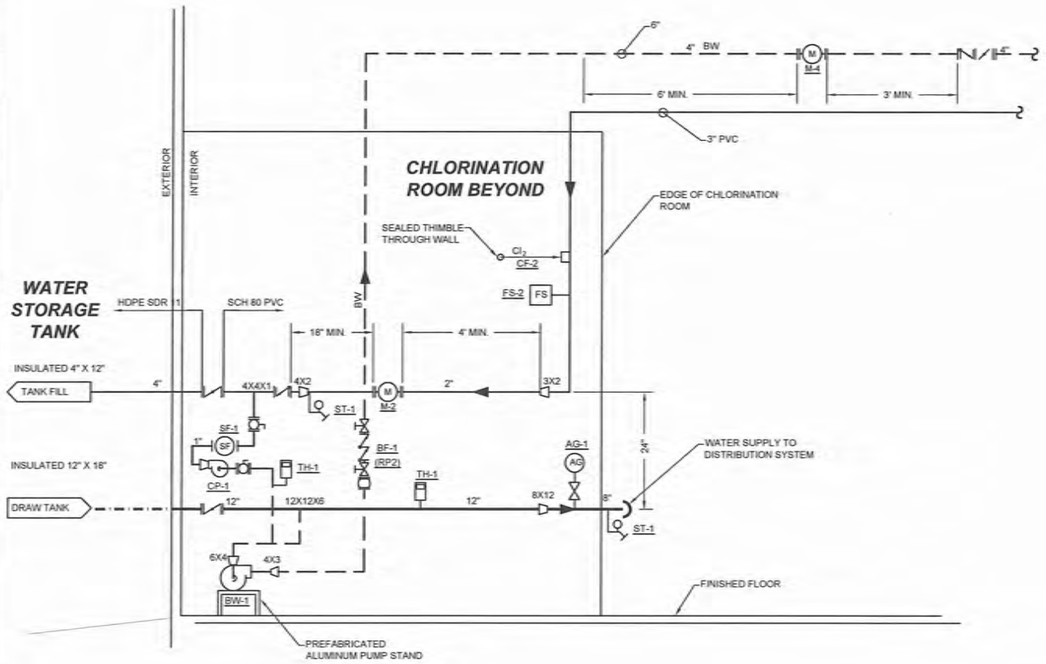

1 M2.3 TANK FILL AND DRAW SCHEMATIC
SCALE: NTS

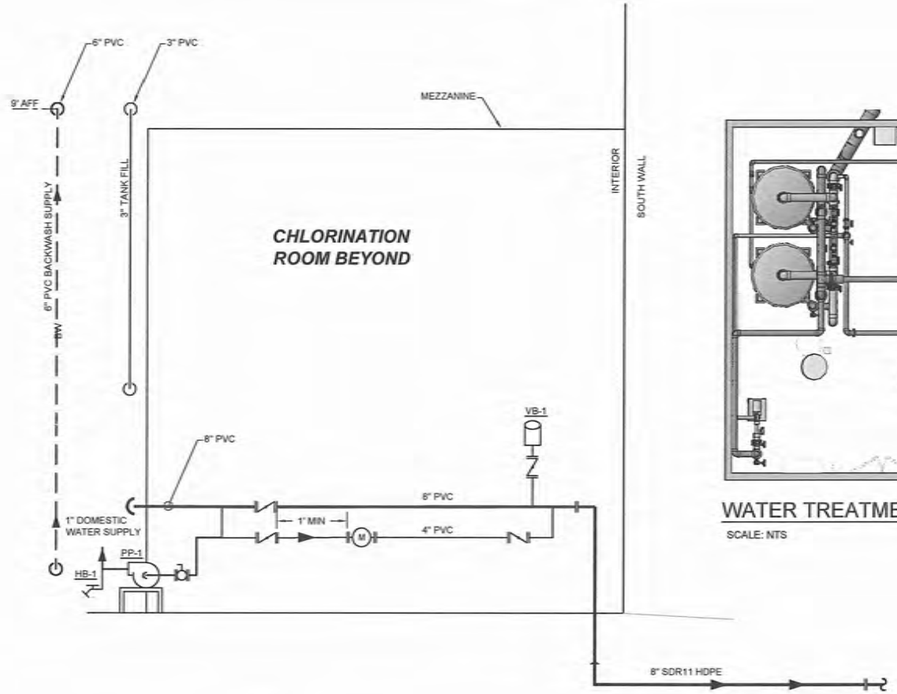

2 M2.3 WATER OUT SCHEMATIC
SCALE: NTS

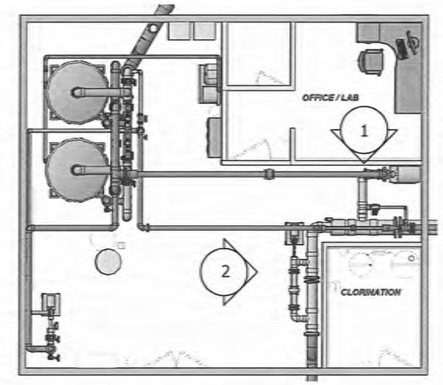

WATER TREATMENT PLANT DETAIL KEY
SCALE: NTS

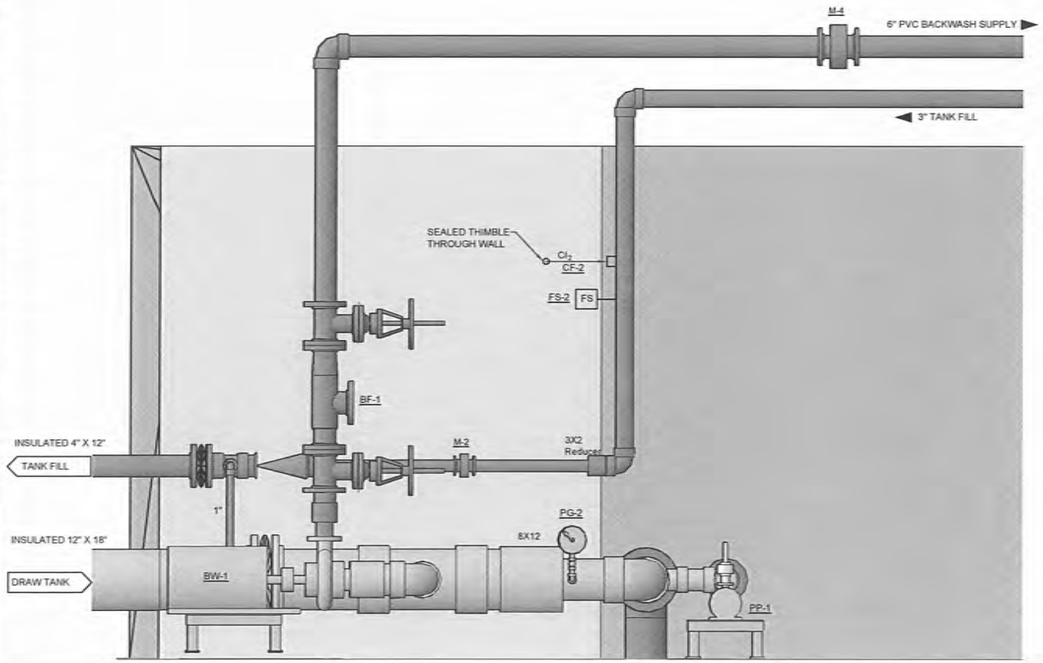

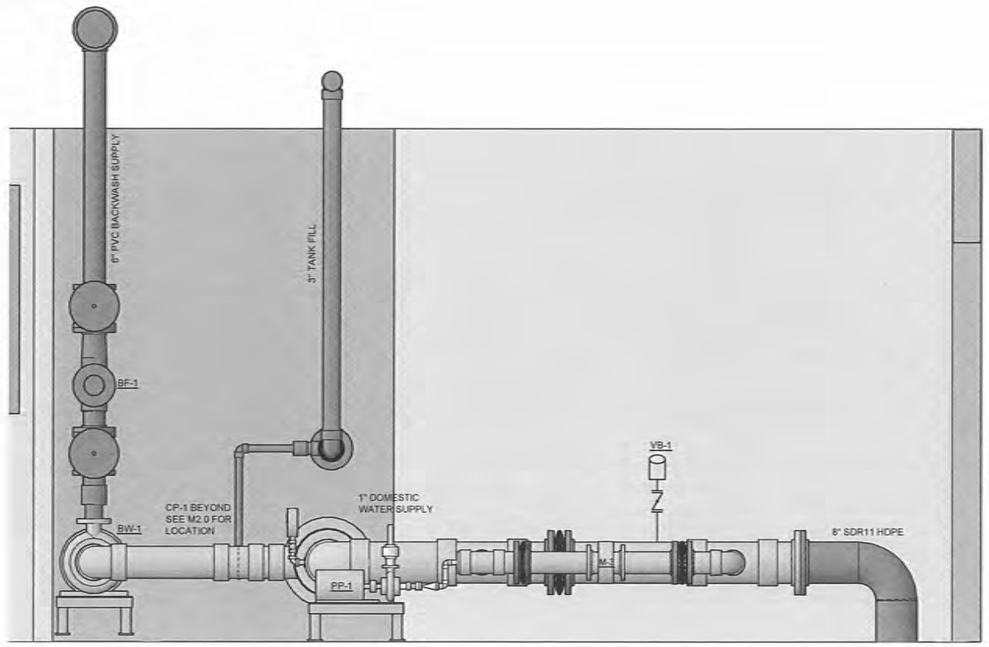

RECORD DRAWING CERTIFICATE
THESE DRAWINGS REFLECT RECORDED INFORMATION OBTAINED DURING CONSTRUCTION. INFORMATION PROVIDED HEREIN IS ACCURATE TO THE BEST OF MY KNOWLEDGE.
NAME
DATE

SCALE: AS SHOWN
BAR IS ONE INCH ON ORIGINAL DRAWING
IF NOT ONE INCH ON THIS SHEET ADJUST SCALES ACCORDINGLY

CONSTRUCTION RECORD
FIELD BOOK
STAKING
FOREMAN
AS-BUILT
INSPECTOR

STATE OF ALASKA — REGISTERED ENGINEER — LANCE A. PETERSON — 10,720 — 05-05-2010

2009 WATER SYSTEM UPGRADES

TANK FILL & DRAW PROCESS SCHEMATICS

ATKA, ALASKA

CE2 ENGINEERS, INC.
PO BOX 220948 ANCHORAGE, AK 99523 PH: 907-346-1010 FAX: 907-346-1015

REVISION	BY	DATE

Project No. ____
Date MAY 2010
Designed LAP
Drawn ____
Approved LAP

Sheet No.
M2.3

G:\ACAD\ATKA\2009 Water System Upgrades\M2.3 tank fill schematic diagram.dwg, 5/3/2011 2:22:12 PM, Flash, LANIER MP C2050_LD520C PCL 6BLK WHIT.pc3

NOTES:

1. CALLOUTS IN HEXAGONS ARE DESCRIBED IN THE TABLE, DETAIL 2 THIS SHEET.
2. MANWAYS "A" LOCATION 90° FOR PF-1 ONLY.
3. MANWAYS "G" LOCATION 270° FOR PF-2 ONLY.

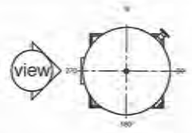

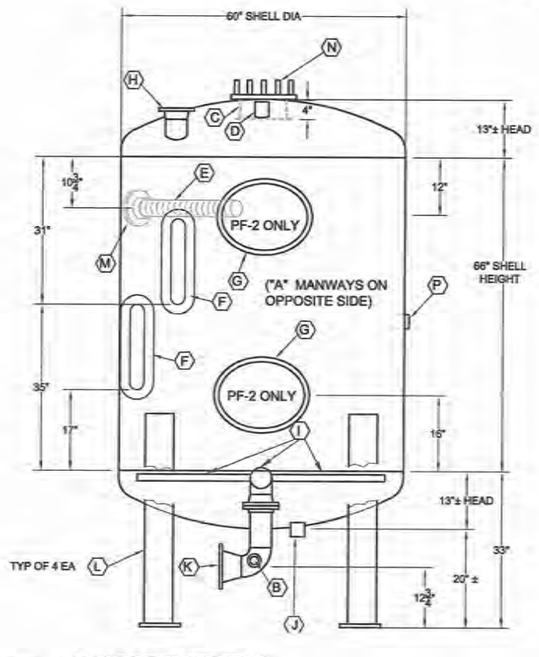

1 / M2.4 **270° POSITION VIEW**
MULTI-MEDIA PRESSURE FILTER ELEVATION
SCALE: 3/4"=1'-0"

NOZZLE MARK	QUANTITY	SIZE	SERIES	LOCATION	DESCRIPTION
A	1	14" X 18"	100 PSI	90°	ELLIPTICAL MANWAY, 2-YOKE (PF-1 VESSEL ONLY)
B	2	2"	SCH 80	90°, 270°	2" SS THREDOLET OR HALF-COUPLING BOTH SIDES
C	1	12" X 12" X 1/4"	304 SS	-	12" X 12" X 1/4" SPLASH PLATE AND STAND-OFF SUPPORTS
D	2	2" FIPT	304 SS	90°, 270°	2" SS HALF COUPLING
E	1	3.5" O.D. X 24" L	SS	45°	3.5" SS V-WIRE MEDIA SCREEN, 0.010" SLOTS, ONE END CAPPED, OTHER END WELDED 9" O.D. x 1/2" THK SS PLATE DRILLED TO 4" 150# FLANGE LAYOUT
F	1	3"W X 18"L	100 PSI, SS	315°, 337.5°	3"W X 18"L OBROUND SIGHT GLASS, ASME RATED (PAPAILIAS OR EQUAL)
G	1	14" X 18"	100 PSI, SS	270°	ELLIPTICAL MANWAY, 2-YOKE (PF-2 VESSEL ONLY)
H	1	4"	304 SS	315°	4" Ø ILLUMINATION FIXTURE w/ HIGH DENSITY LAMP, PAPAILIAS REX-HD w/ NW-80 TYPE 304 SS/TFE MOUNTING PAD
I	1	4" IPS	304 SS	-	304 SS UNDERDRAIN ASS'Y. HORIZONTAL HEADER AND LATERAL. USE SS V-WIRE SCREEN MATERIAL FOR RADIALS OR LATERALS. KEEP LATERALS WITHIN 6" O.C., SEE DETAIL 3 THIS SHEET.
J	1	2" FIPT	304 SS	180°	STEEL THREADED COUPLING FOR BOTTOM DRAIN w/ V-WIRE SCREEN, SEE DETAIL 3 THIS SHEET.
K	1	6" IPS	304 SS	0°	BOTTOM PORT OUTLET: 6"SLIP ON FLANGE, 6X4 RED, 4" LR WELD ELBOW WITH 2" SIDE-MOUNT HALF COUPLING ON EACH SIDE OF ELBOW FOR AIR SCOUR AND SAMPLING, SCH 40 PIPE NOZZLE, CONNECT TO UNDERDRAIN HUB INSIDE VESSEL AS REQUIRED.
L	1	AS REQ'D	304 SS	45°, 135° 225°, 315°	VESSEL LEG, L6X6X 1/2 OR W-BEAM FOR SEISMIC ZONE 4 8"X8"X3/4" THK BASE PLATE W/1" DIA BOLT HOLE IN CENTER OF PLATE (TYP OF 4 LEGS)
M	1	4"	SCH 40 SS	45°	SIDE DRAIN NOZZLE: 4" PIPE w/ 150# SLIP-ON FLANGE. (SEE "E" ABOVE FOR SCREEN ASS'Y)
N	1	6"	304 SS	-	6" TOP FLANGE PAD 150# PATTERN w/ SS STUD BOLTS
P	1	5"W X 3"H	—	180°	VESSEL FABRICATOR'S AND ASME DATA PLATE(S) AS REQUIRED

2 / M2.4 **MULTI-MEDIA PRESSURE FILTER PENETRATION SCHEDULE**
SCALE: NTS

NOTE:
1. UNDERDRAINS SHALL BE TYPE 304 STAINLESS STEEL, FLANGE BOLTED TO 4" PIPE CONNECTION. DESIGN SHALL BE HEADER-AND-LATERAL STYLE.

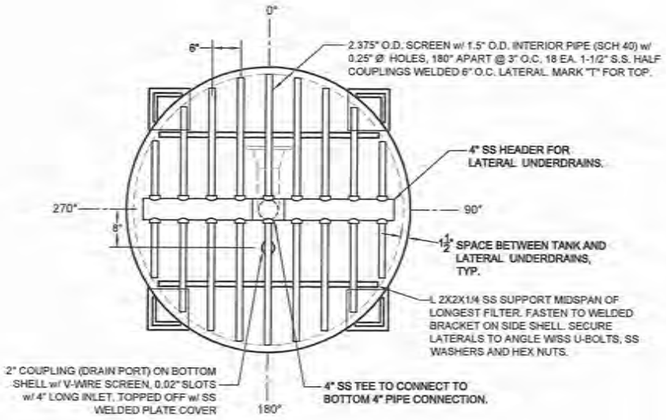

3 / M2.4 **MULTI-MEDIA FILTER BOTTOM HEAD PLAN**
SCALE: 3/4"=1'-0"

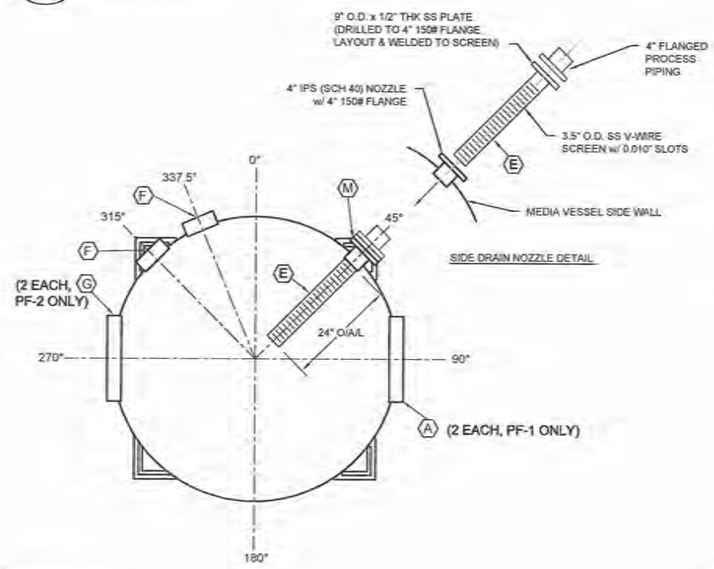

NOTE:
CALLOUTS IN HEXAGONS ARE DESCRIBED ABOVE.

4 / M2.4 **MULTI-MEDIA FILTER SHELL PLAN**
SCALE: 3/4"=1'-0"

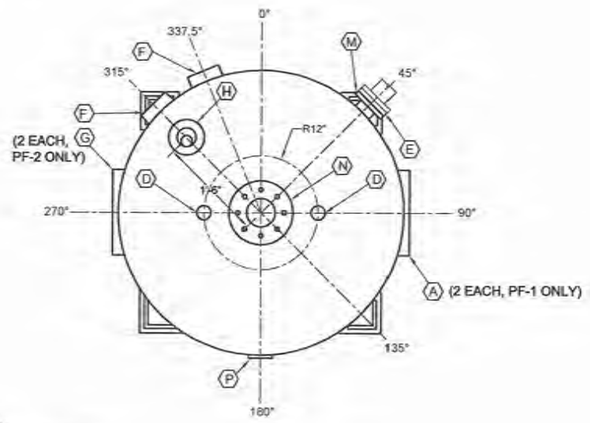

NOTE:
CALLOUTS IN HEXAGONS ARE DESCRIBED ABOVE.

5 / M2.4 **MULTI-MEDIA FILTER TOP HEAD PLAN**
SCALE: 3/4"=1'-0"

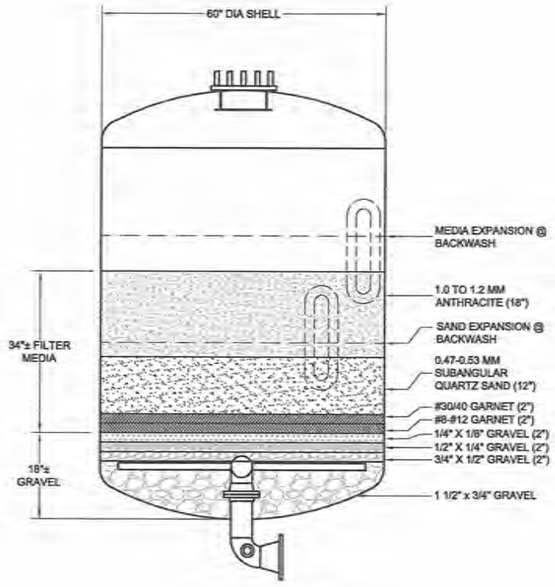

6 / M2.4 **FILTER MEDIA & GRAVEL BED DETAILS**
SCALE: 3/4"=1'-0"

RECORD DRAWING CERTIFICATE
THESE DRAWINGS REFLECT RECORDED INFORMATION OBTAINED DURING CONSTRUCTION. INFORMATION PROVIDED HEREIN IS ACCURATE TO THE BEST OF MY KNOWLEDGE.
NAME _____ DATE _____

SCALE:
0 1" IF NOT ONE INCH ON THIS SHEET ADJUST SCALE ACCORDINGLY

CONSTRUCTION RECORD
FIELD BOOK _____
STAKING _____
FOREMAN _____
AS-BUILT _____
INSPECTOR _____

REVISION | BY | DATE

2009 WATER SYSTEM UPGRADES

PRESSURE FILTER DETAILS & SECTIONS

ATKA, ALASKA

CE2 ENGINEERS, INC.
PO BOX 232948 ANCHORAGE, AK 99523 PH: 907-346-1010 FAX: 907-346-1015

Project No. _____
Date MAY 2010
Designed LAP
Drawn DDR
Approved LAP

Sheet No.
M2.4

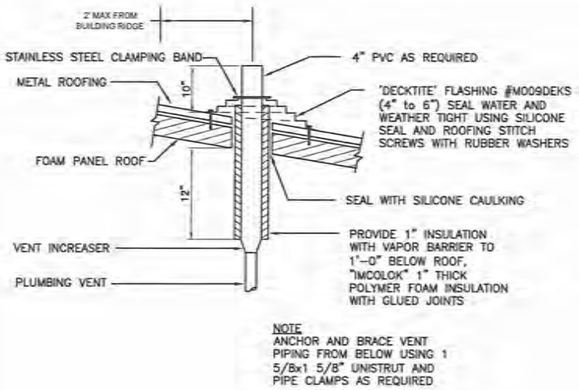

NOTE
ANCHOR AND BRACE VENT PIPING FROM BELOW USING 1 5/8x1 5/8" UNISTRUT AND PIPE CLAMPS AS REQUIRED

3 M2.5 VENT THROUGH ROOF (VTR)
SCALE: NTS

NOTES

1. ALL PIPING ASSUMED 2" DIAMETER UNLESS OTHERWISE NOTED
2. VENT PIPING SHOWN SCHEMATICALLY. ROUTE PIPING PARALLEL TO BUILDING LINES IN NEAT, LOGICAL ROUTE AS REQUIRED.
3. EXTEND VENTS FOR FLOOR DRAINS A MINIMUM OF 6" ABOVE FINISHED FLOOR ELEVATION BEFORE JOINING INTO A SINGLE VENT.

SHEET LEGEND

----------	VENT PIPING–ABS BELOW GRADE, PVC DWV ABOVE GRADE
————	SANITARY SEWER–ABS NO–HUB BELOW GRADE, PVC ABOVE GRADE
CO	CLEAN OUT
FD	FLOOR DRAIN
⌧	FLOOR/ROOF PENETRATION
LV	LAVATORY
OI	OIL INTERCEPTOR
SS	SERVICE SINK
SU	VACUUM SEWER SUMP
VTR	VENT THROUGH ROOF
WC	WATER CLOSET
⊗ FD-#	FLOOR DRAIN DIAMETER

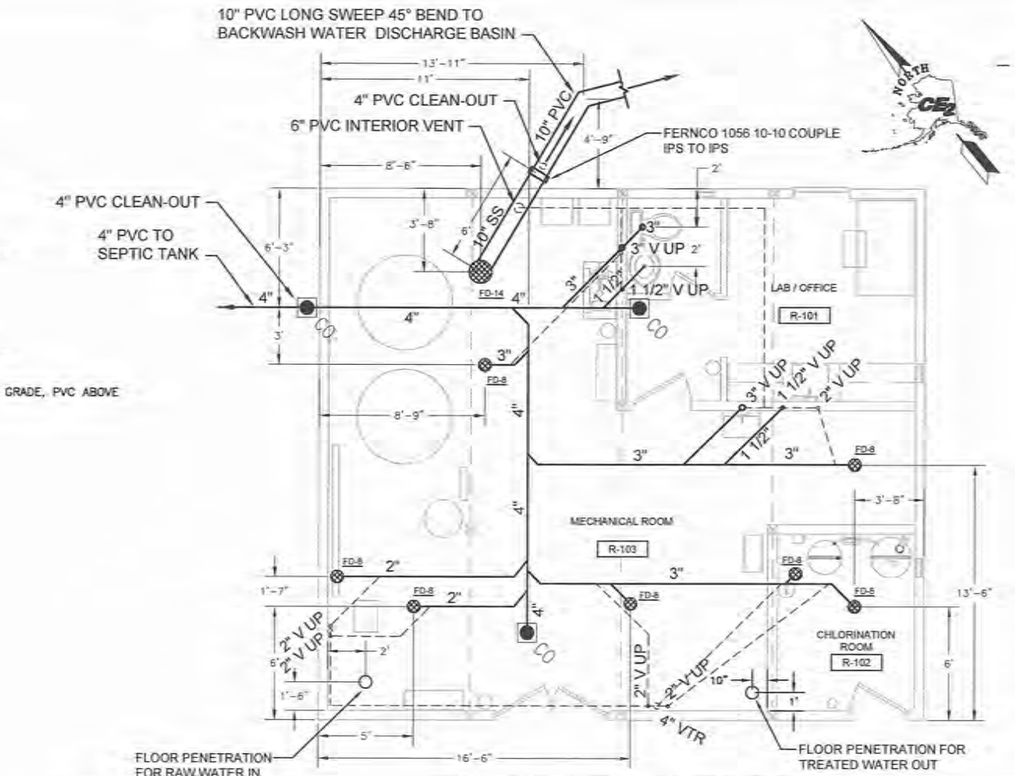

1 M2.5 DWV PIPING AND VENTING PLAN
SCALE: 1/4"=1'-0"

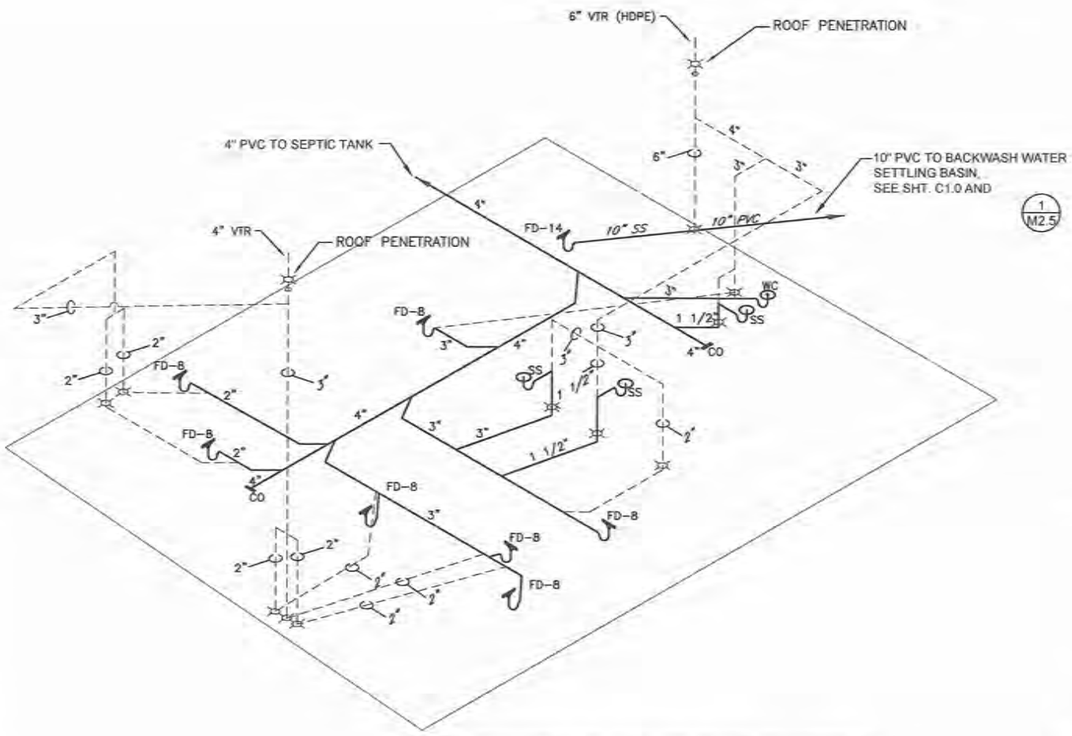

4 M2.5 DWV PIPING AND VENTING ISOMETRIC
SCALE: NTS

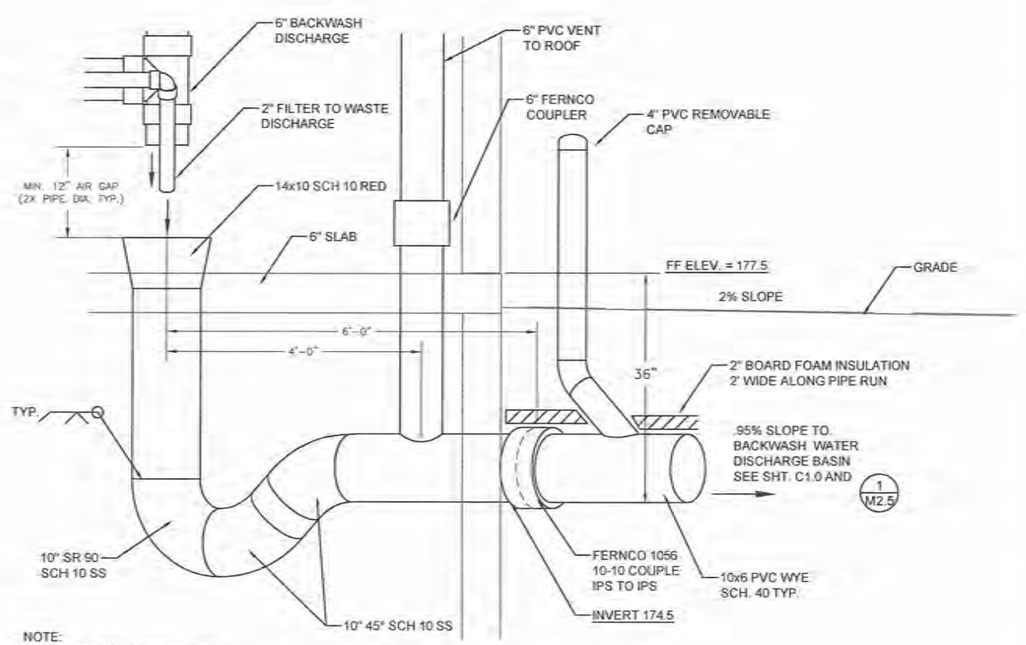

NOTE:
UNDER SLAB BACKWASH WATER DRAIN PIPING AND FITTINGS ARE TYPE 316 SCH 10 SS TYP.

2 M2.5 FLOOR DRAIN PLAN
SCALE: NTS

RECORD DRAWING CERTIFICATE
THESE DRAWINGS REFLECT RECORDED INFORMATION OBTAINED DURING CONSTRUCTION. INFORMATION PROVIDED HEREIN IS ACCURATE TO THE BEST OF MY KNOWLEDGE.
NAME
DATE

SCALE:
BAR IS ONE INCH ON ORIGINAL DRAWING
IF NOT ONE INCH ON THIS SHEET ADJUST SCALE ACCORDINGLY

CONSTRUCTION RECORD
FIELD BOOK
STAKING
FOREMAN
AS-BUILT
INSPECTOR

2009 WATER SYSTEM UPGRADES

WASTE, DRAIN AND VENT PLAN AND DETAILS
ATKA, ALASKA

CE2 ENGINEERS, INC.
PO BOX 220640 ANCHORAGE, AK 99523 PH: 907-346-1010 FAX: 907-346-1015

BY	DATE
REVISION	

Project No. ____ Date MAY 2010
Designed LAP
Drawn DDR
Approved LAP

Sheet No.
M2.5

G:\ACAD\ATKA\2009 Water System Upgrades\M2.5 DRAIN WASTE AND VENT.dwg, 5/3/2011 2:21:16 PM, Flash, LANIER MP C2050_LDS20C PCL 6.pc3

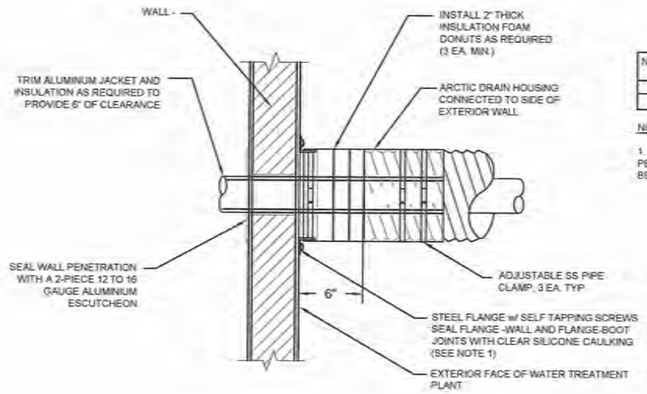

NOMINAL OUTER JACKET SIZE	FLANGE O.D.	FLANGE I.D.
12"	15"	12 ⅛"
18"	20"	18 ⅛"

NOTES:

1. STEEL FLANGES AT PENETRATIONS MAY NEED TO BE FIELD TRIMMED.

1 M2.6 **WALL PENETRATION DETAIL**
SCALE: NTS

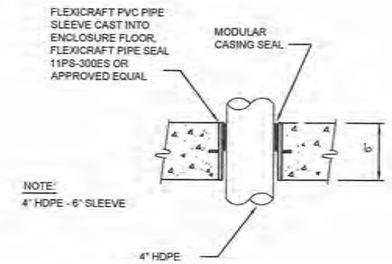

2 M2.6 **UNRESTRAINED FLOOR PENETRATION**
SCALE: NTS

NOTES:
1. ALL UNISTRUT CHANNEL AND FITTINGS TYPE 304SS
2. FASTEN W/ 1/2"Ø X 1 1/4" L STAINLESS STEEL HEX BOLTS AND SS SPRING NUTS.

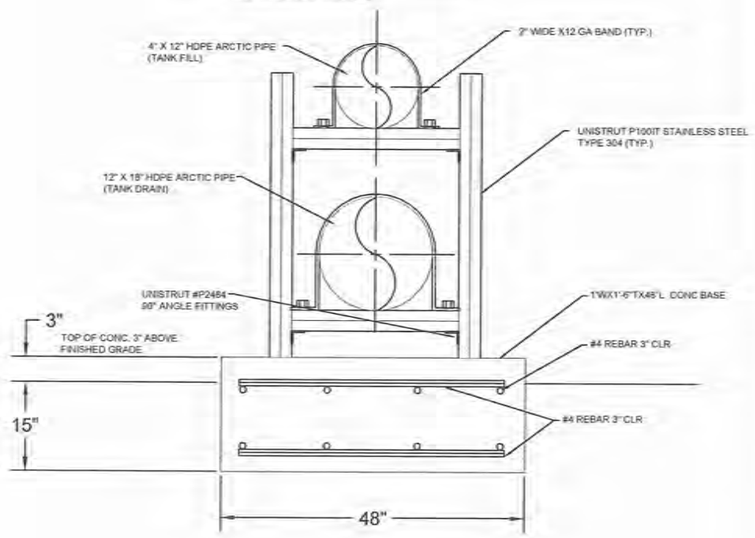

3 M2.6 **TANK TO BUILDING PIPE SUPPORT**
SCALE: NTS

RECORD DRAWING CERTIFICATE
THESE DRAWINGS REFLECT RECORDED INFORMATION OBTAINED DURING CONSTRUCTION. INFORMATION PROVIDED HEREIN IS ACCURATE TO THE BEST OF MY KNOWLEDGE.
NAME
DATE

SCALE:
BAR IS ONE INCH ON ORIGINAL DRAWING
0 1"
IF NOT ONE INCH ON THIS SHEET ADJUST SCALES ACCORDINGLY

CONSTRUCTION RECORD
FIELD BOOK
STAKING
FOREMAN
AS-BUILT
INSPECTOR

REGISTERED PROFESSIONAL ENGINEER
STATE OF ALASKA
Mark Fenger
12130
ISSUED

2009 WATER SYSTEM UPGRADES
DETAILS
ATKA, ALASKA

CE2 ENGINEERS, INC.
PO BOX 232048 ANCHORAGE, AK 99523 PH: 907-349-1915 FAX: 907-349-1915

REVISION	BY	DATE

Project No.
Date MAY 2010
Designed LAP
Drawn DDR
Approved LAP

Sheet No.
M2.6

G:\ACAD\ATKA\2009 Water System Upgrades\M2.6 EQUIP DETAILS.dwg, 2/24/2011 3:25:46 PM, cmerz, LANIER MP C2050_LD520C PCL 6.pc3

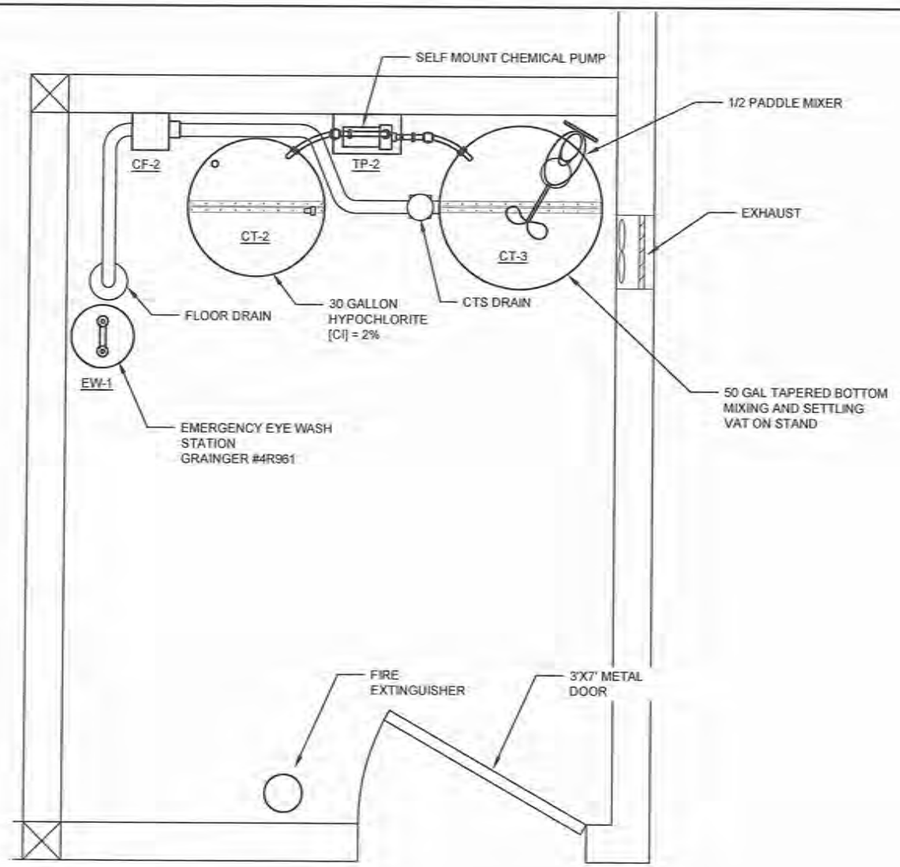

1 M2.7 MECHANICAL PLAN CHLORINATION ROOM
SCALE: 1" = 1'-0"

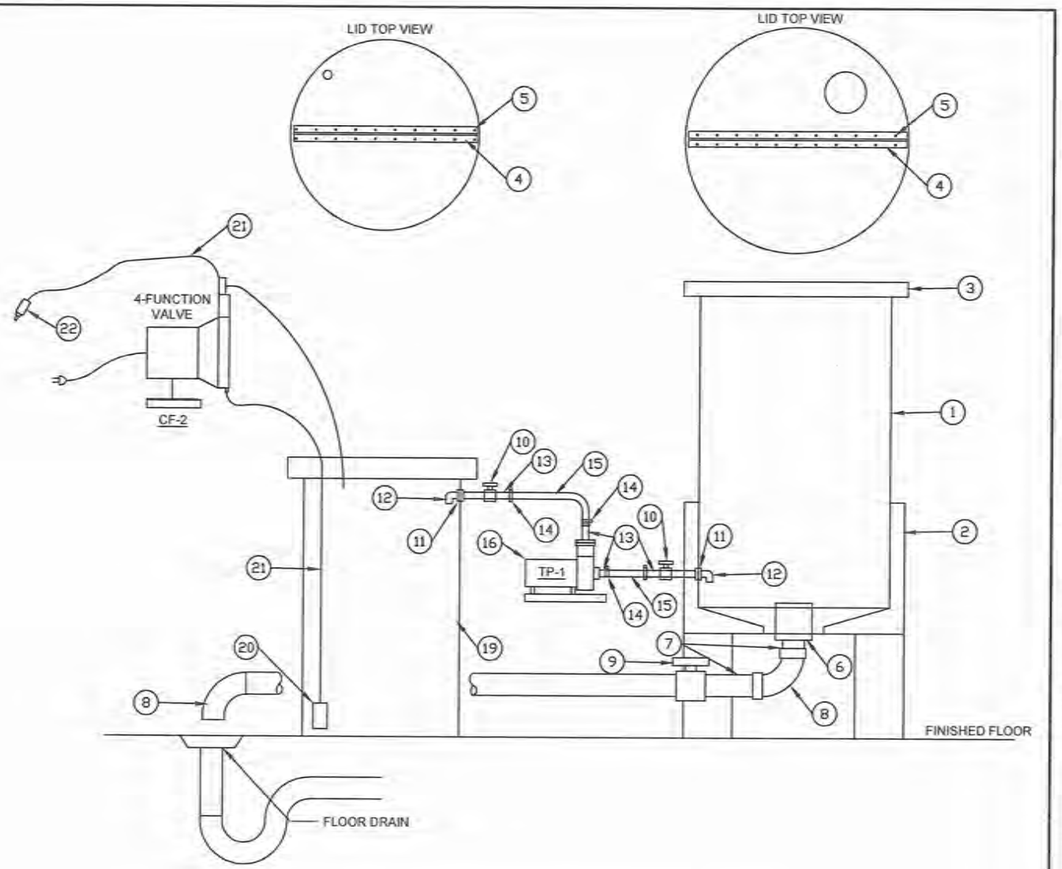

2 M2.7 HYPOCHLORITE SOLUTION MIXING AND FEED
SCALE: NTS

Callout	Description
1	55 gal hypochlorite mixing tank, total drain, with lid, Snyder Industries P.N. 5790000N--L
2	Plastic tank stand 12" h for 22" dia total drain tank, Snyder Industries P.N. 1370000N
3	Tank lid for (1) above. Comes with tank
4	2" wide x 6' long PVC continuous hinge, McMaster-Carr #11195A45
5	1/4-20x3/4" PVC capscrew, fully threaded, McMaster-Carr #95841A540 (Pkg of 10); 1/4-20 PVC Hex nut, McMaster-Carr #94806A029 (pkg of 25)
6	Total bottom drain fitting, 2" FIPT, Viton gaskets, Snyder Industries P.N. 341146
7	2" sch 80 pvc pipe, glue or thread as req'd
8	2" sch 80 PVC 90 deg el, soc x soc, Spears #806-020
9	2" PVC full union ball valve, soc or thread fittings inc., Viton O-ring, Spears #2339-020
10	3/4" PVC full union ball valve, soc or thread fittings inc., Viton O-ring, Spears #2339-007
11	3/4" PVC tank adaptor soc x soc with viton gasket, Spears #8170-007
12	3/4" PVC sch 80 90 deg el, soc x soc, Spears #806-007, with short length of 3/4" sch 80 pvc pipe connecting to tank adaptor

Callout	Description
13	3/4" PVC hose insert adaptor, mipt x insert, Spears #1436-007
14	Type 316 stainless steel worm drive hose clamp, 7/8" to 1-1/4" ID, 1/2" wide, McMaster-Carr #45945K65
15	TYGON B-44-4X IB TUBING 3/4 X 1", mfr Part #ADA00053, Ryan Herco #0030.180
16	Magnetic drive centrifugal pump, TE/Sub motor, 115V, 115VAC, 1/20 hp, 2 amps, 1/2" mipt discharge x 3/4" fipt suction, March Manufacturing model LC-3CP-MD
17	Sch 80 PVC reducer coupling assembly, 3/4" fipt x 1/2" fipt, consisting of Spears #830-007 3/4" fipt coupling and Spears #839-101 3/4" x 1/2" flush bushing
18	not used
19	30 gallon vertical polyethylene open top tank with lid, Snyder Industries #10001VOT with lid
20	Check valve and weight assembly for 1/4" OD chemical feed tubing. Comes with CF-2 chemical feed pump as part of a kit
21	1/4" OD chemical feed tubing. Comes with CF-2 chemical feed pump as part of a kit
22	1/2" tubing injector quill and check valve, 1/2"mipt, comes with CF-2 chemical feed pump as part of a kit

RECORD DRAWING CERTIFICATE
THESE DRAWINGS REFLECT RECORDED INFORMATION OBTAINED DURING CONSTRUCTION. INFORMATION PROVIDED HEREIN IS ACCURATE TO THE BEST OF MY KNOWLEDGE.
NAME
DATE

SCALE:
BAR IS 1 INCH ON ORIGINAL DRAWING. IF NOT ONE INCH ON THIS SHEET ADJUST SCALE ACCORDINGLY

CONSTRUCTION RECORD
FIELD BOOK
STAKING
FOREMAN
AS-BUILT
INSPECTOR

REVISION | BY | DATE

2009 WATER SYSTEM UPGRADES

MECHANICAL
CHLORINATION ROOM
AND DETAILS

ATKA, ALASKA

CE2 ENGINEERS, INC.
POBOX 223948 ANCHORAGE, AK 99523 PH 907-349-1010 FAX 907-349-1015

Project No.
Date MAY 2010
Designed LAP
Drawn LAW
Approved LAP

Sheet No.
M2.7

G:\ACAD\ATKA\2009 Water System Upgrades\M2.7 CHLORINE ROOM rev 1.dwg, 2/24/2011 12:39:32 PM, Flash, LANIER MP C2050_LD520C PCL 6BLK WHTT.pc3

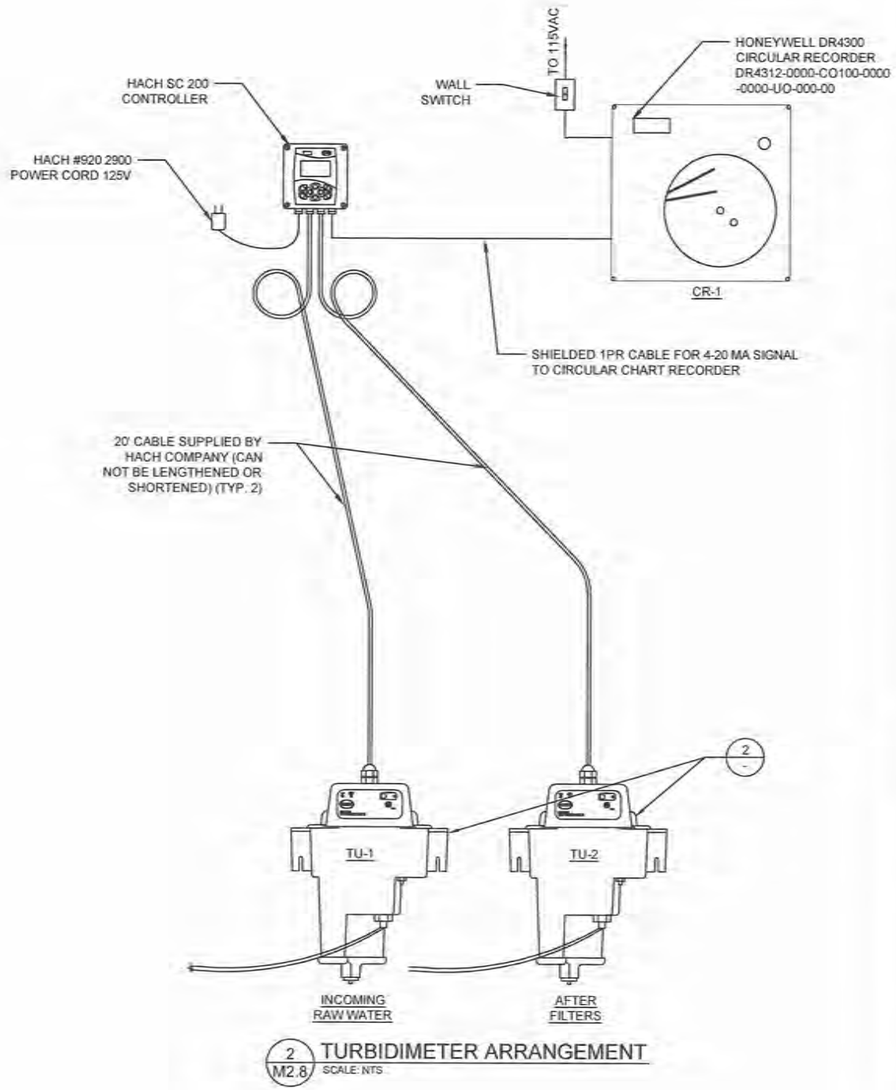

2 / M2.8 TURBIDIMETER ARRANGEMENT
SCALE: NTS

NOTES:

THIS SYSTEM WILL HAVE 2 TURBIDITY READINGS. (RAW WATER AND FINISHED WATER), AND ONE FOR EACH TURBIDITY READING TO CIRCULAR CHART RECORDER. THE SC200 CONTROLLER POWERS AND RECORDS DATA FROM THE TURBIDIMETERS AND SENDS A 4-20 MA ANALOG SIGNAL TO THE CIRCULAR CHART RECORDER.

1 HACH SC200 CONTROLLER - 2 INPUTS / 2 EA 4-20MA OUTPUTS
2-1720E HACH TURBIDIMETER
1- HONEYWELL DR4300 CIRCULAR RECORDER - 2 EA 4 MA INPUTS

RECORD DRAWING CERTIFICATE
THESE DRAWINGS REFLECT RECORDED INFORMATION OBTAINED DURING CONSTRUCTION. INFORMATION PROVIDED HEREIN IS ACCURATE TO THE BEST OF MY KNOWLEDGE.
NAME
DATE

SCALE:

CONSTRUCTION RECORD
FIELD BOOK
STAKING
FOREMAN
AS-BUILT
INSPECTOR

REVISION | BY | DATE

2009 WATER SYSTEM UPGRADES

MECHANICAL
TURBIDIMETER
ARRANGEMENT
ATKA, ALASKA

CE2 ENGINEERS, INC.
PO BOX 223946 ANCHORAGE, AK 99523 PH 907-348-1010 FAX 907-348-1015

Project No. ____ Date MAY 2010
Designed LAP
Drawn LAW
Approved LAP

Sheet No.
M2.8

G:\ACAD\ATKA\2009 Water System Upgrades\M2.8 TURBIDIMETER.dwg, 2/24/2011 12:44:49 PM, Flash, LANIER MP C2050_LD520C PCL 6BLK WHIT.pc3

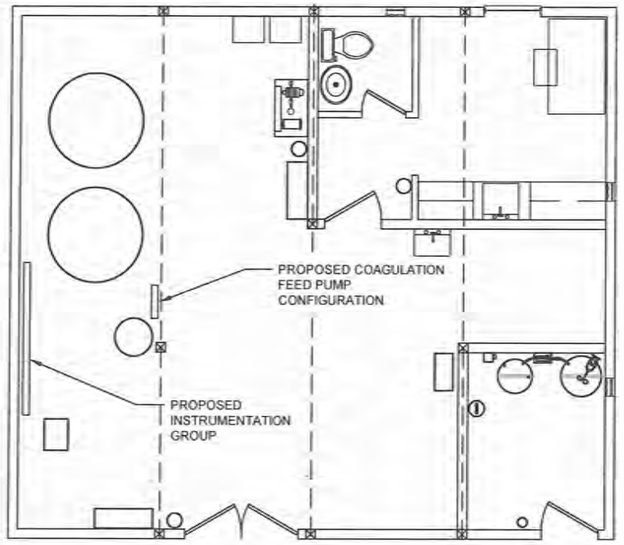

KEY MAP
SCALE: NTS

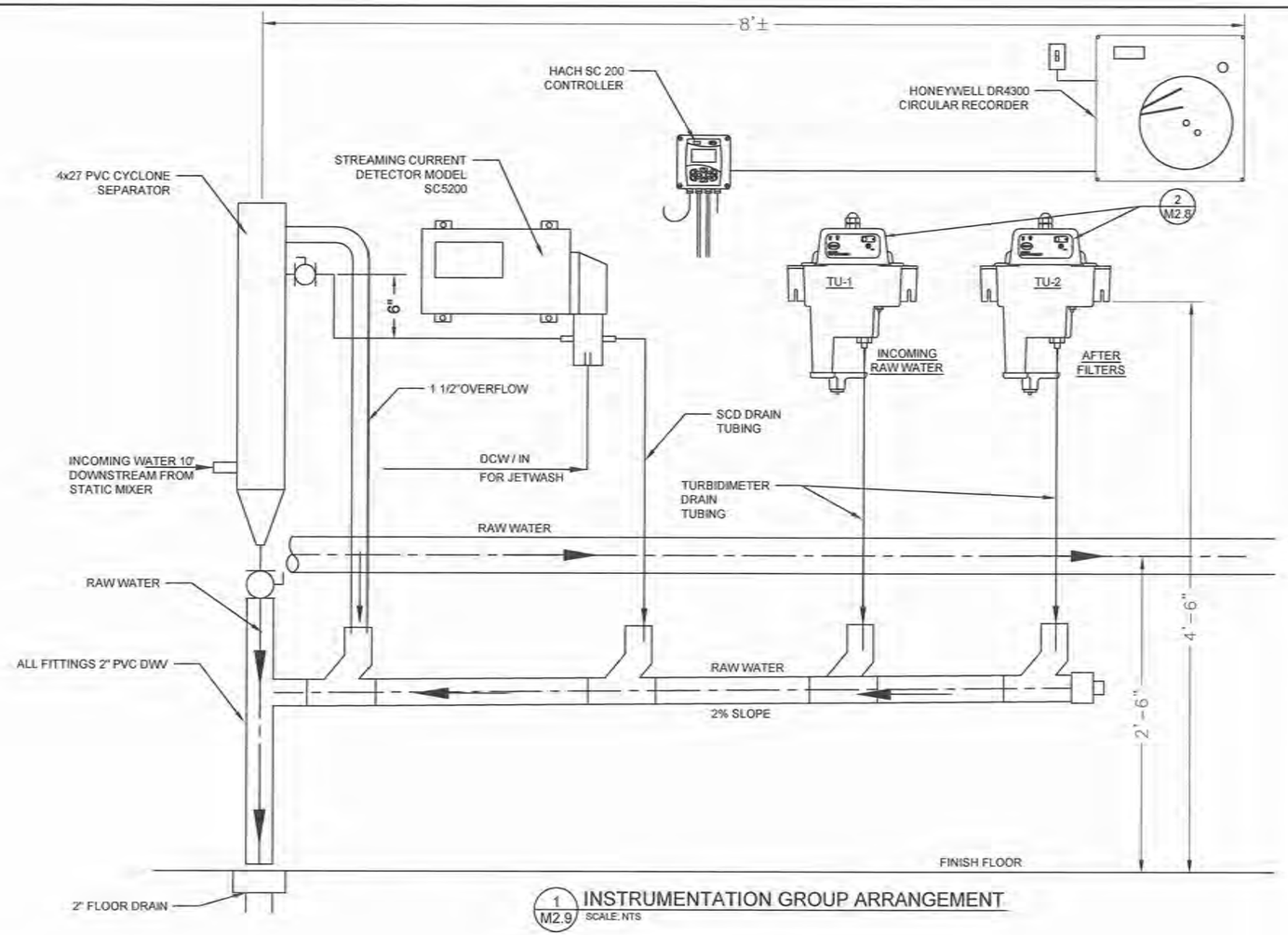

1 M2.9 INSTRUMENTATION GROUP ARRANGEMENT
SCALE: NTS

COAGULANT FEED PUMP CONFIGURATION

1. ALL PIPING AND FITTINGS SHALL BE 1/2"SCH 80 PVC, UNLESS OTHERWISE NOTED.
2. CONNECTIONS TO PUMP CFP-1 AND INJECTION QUILL SHALL BE 3/8" OD TUBING AS SUPPLIED BY LMI

COMPONENTS

1. 30 GALLON COAGULATION TANK, LMI #27400
2. MIXER MOTOR W/ AGITATOR 27" LONG, SS/EPOXY COATED SHAFT SEE C5.2 EQUIP LIST MM-1
3. PUMP AND TANK STAND, 12" HIGH, FABRICATED ALUMINUM
4. CALIBRATION COLUMN, 100ML, MILTON ROY #TT-0100
5. CHEMICAL FEED PUMP 1.00 GPH MAX @ 100PSI, 4-20MA PACING, 115VAC LMI #951-498SI
6. SAFETY VALVE PVC 1/2" PIPT MILTON ROY GVS 082
7. PULSATION DAMPER, 1/2" FIPT, USA BLUE BOOK #ME-70133
8. BACK PRESSURE VALVE PVC BODY 1/2"FIPT MILTON ROY #GVB 082
9. TRUE UNION BALL VALVE, PVC, 1/2", SPEARS #2339-005
10. INJECTION QUILL, SUPPLIED BY LMI PUMP

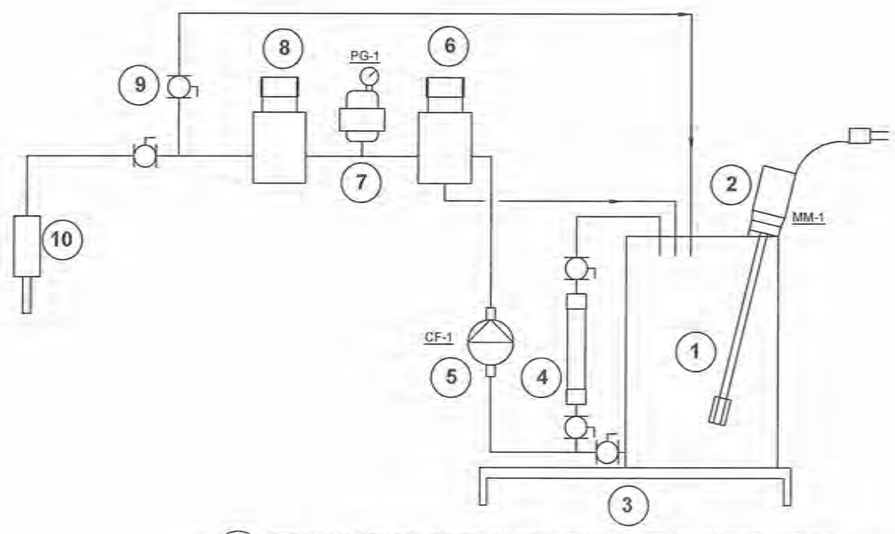

2 M2.9 COAGULATION FEED PUMP CONFIGURATION DIAGRAM
SCALE: NTS

RECORD DRAWING CERTIFICATE
THESE DRAWINGS REFLECT RECORDED INFORMATION OBTAINED DURING CONSTRUCTION. INFORMATION PROVIDED HEREIN IS ACCURATE TO THE BEST OF MY KNOWLEDGE.
NAME
DATE

SCALE:

CONSTRUCTION RECORD
FIELD BOOK
STAKING
FOREMAN
AS-BUILT
INSPECTOR

REVISION | BY | DATE

2009 WATER SYSTEM UPGRADES

INSTRUMENTATION & COAGULATION FEED PUMP DIAGRAM
ATKA, ALASKA

CE2 ENGINEERS, INC.
PO BOX 232048 ANCHORAGE, AK 99523 PH: 907-349-1010 FAX: 907-349-1015

Project No.: ___ Date: MAY 2010 Designed: LAP Drawn: LAW Approved: LAP

Sheet No. M2.9

G:\ACAD\ATKA\2009 Water System Upgrades\M2.9 SCD.dwg, 5/3/2011 2:20:47 PM, Flash, LANIER MP C2050_LD520C PCL 6BLK WHIT.pc3

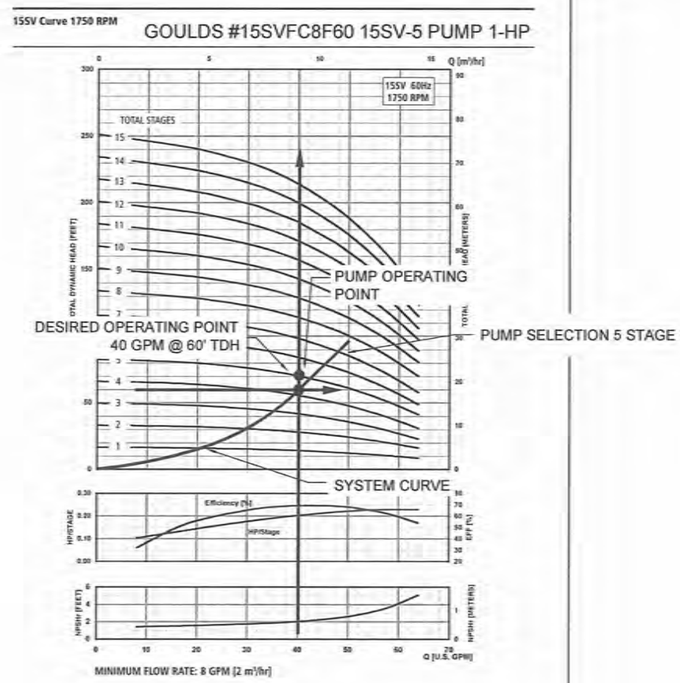

PUMP CURVE BP-1
SCALE: NTS

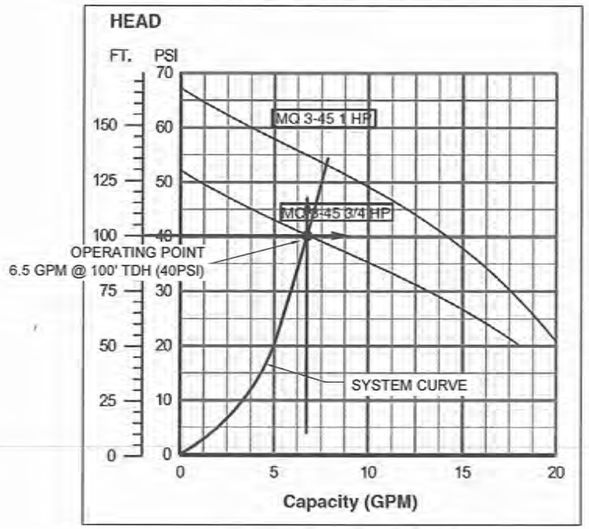

PUMP CURVE PP-1
SCALE: NTS

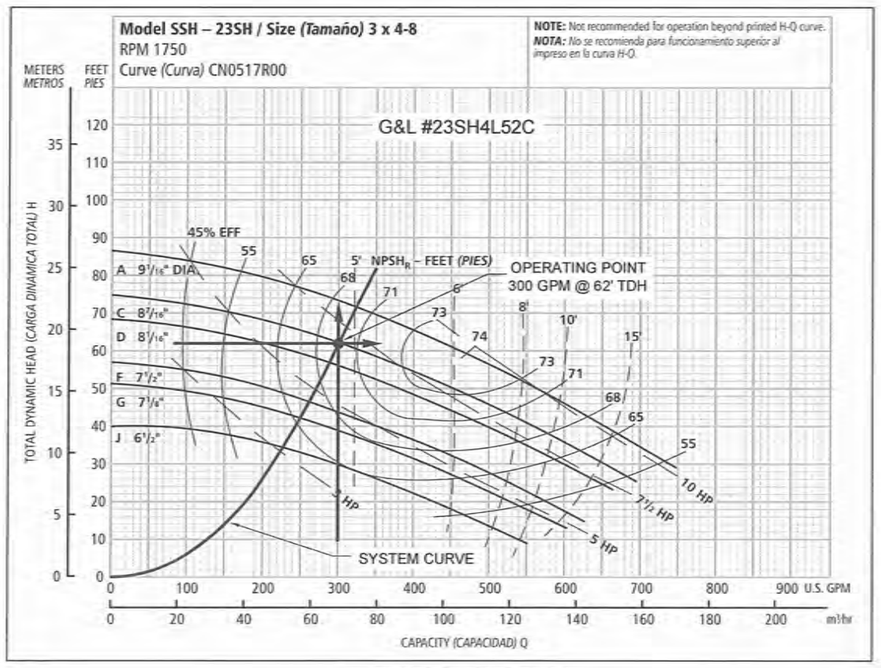

PUMP CURVE BW-1
SCALE: NTS

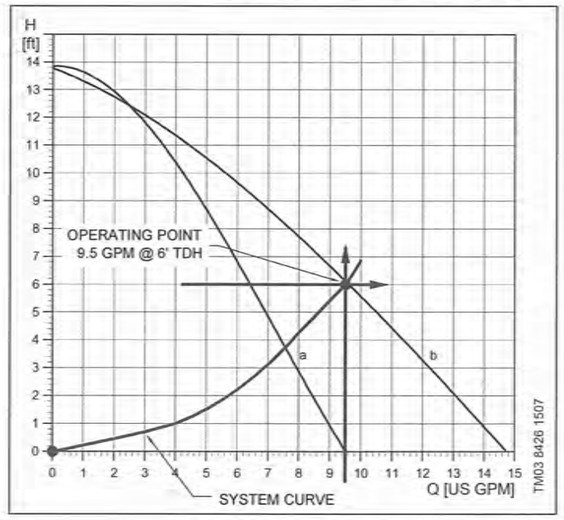

PUMP CURVE CP-1
SCALE: NTS

RECORD DRAWING CERTIFICATE
THESE DRAWINGS REFLECT RECORDED INFORMATION OBTAINED DURING CONSTRUCTION. INFORMATION PROVIDED HEREIN IS ACCURATE TO THE BEST OF MY KNOWLEDGE.
NAME
DATE

SCALE: AS SHOWN

CONSTRUCTION RECORD
FIELD BOOK
STAKING
FOREMAN
AS-BUILT
INSPECTOR

2009 WATER SYSTEM UPGRADES
PUMP CURVES
ATKA, ALASKA

CE2 ENGINEERS, INC.
PO BOX 232948 ANCHORAGE, AK 99523 PH: 907-349-1010 FAX: 907-349-1015

REVISION	BY	DATE

Project No.
Date MAY 2010
Designed LAP
Drawn
Approved LAP

Sheet No.
M3.1

G:\ACAD\ATKA\2009 Water System Upgrades\M3.1 Pump Curves.dwg, 5/3/2011 2:18:36 PM, Flash, LANIER MP C2050_LD520C PCL 6BLK WHIT.pc3

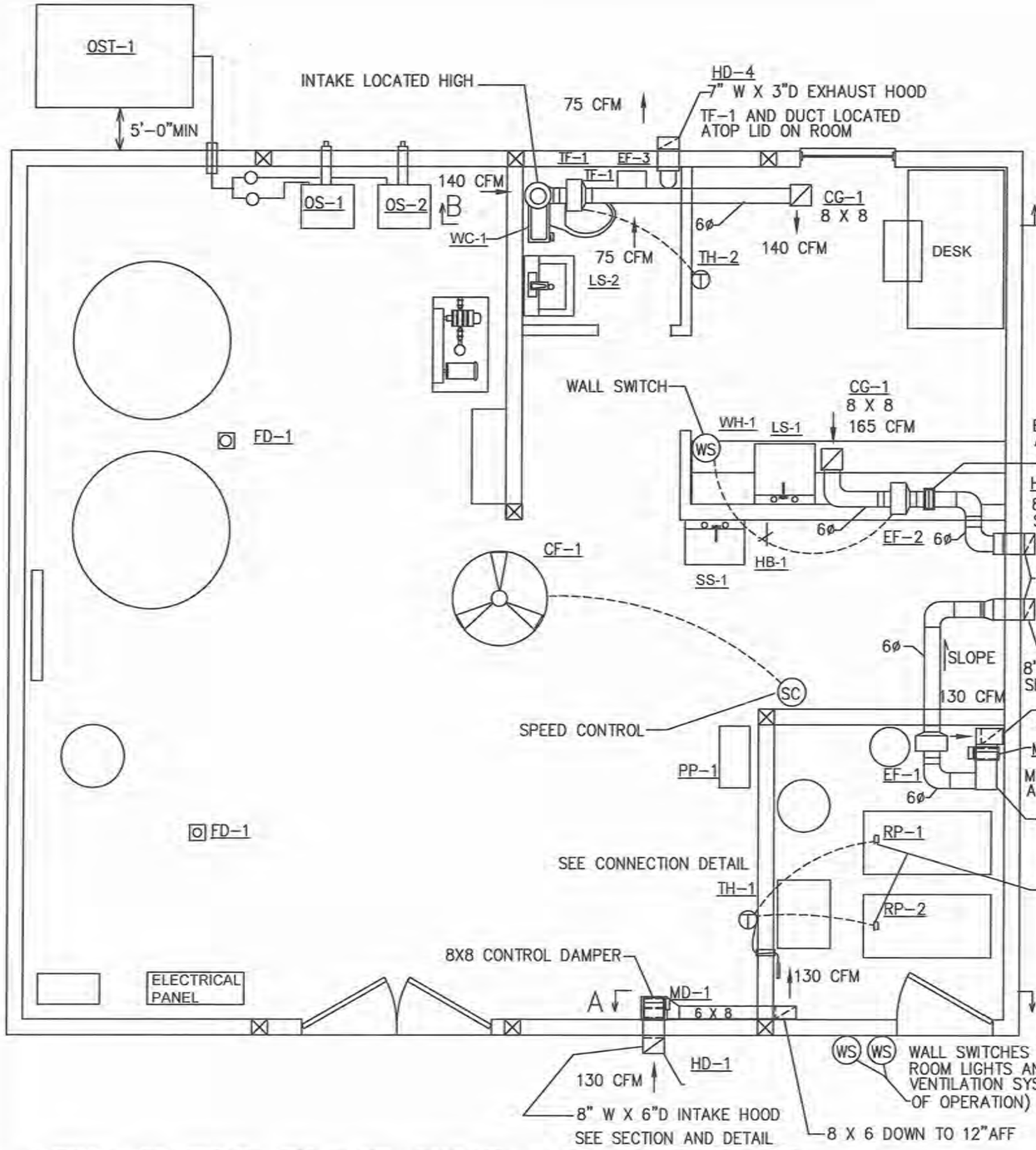

ATKA WATER PLANT HVAC AND PLG PLAN

SCALE: 1/4"=1'-0"

MD-1 MOTORIZED DAMPER 8" WIDE X 8" HIGH. LOW LEAKAGE, 2 POSITION DAMPER, SPRING RETURN:. MFG: RUSKIN CD-50 OR EQ BELIMO LF120 DAMPER MOTOR: 120 V 5.5 WATTS 35 IN LB OR EQ

MD-2 MOTORIZED DAMPER 8" WIDE X 8" HIGH. LOW LEAKAGE, 2 POSITION DAMPER, SPRING RETURN. MFG: RUSKIN CD-50 OR EQ BELIMO LF120 DAMPER MOTOR: 120 V 5.5 WATTS 35 IN LB OR EQ

BDD-1 WEIGHTED BACKDRAFT DAMPER 8" WIDE X 8" HIGH. MFG: RUSKIN CBD-2 DAMPER OR EQUAL

EF-1 EXHAUST FAN: INLINE TYPE, DIRECT DRIVE. 130 CFM@ 0.4 IN W.C., MOUNTING BRACKET, SPEED CONTROL, WORM DRIVE CLAMPS, FLEX PIPE FOR CONNECTIONS, CORROSION RESISTANT MFG: FANTECH (GRAINGER) FR150 .67 AMPS/115V/1 PH OR EQUAL

EF-2 EXHAUST FAN: INLINE TYPE, DIRECT DRIVE,165 CFM@ 0.4 IN W.C., MOUNTING BRACKET, SPEED CONTROL, WORM DRIVE CLAMPS, FLEX PIPE FOR CONNECTIONS, CORROSION RESISTANT MFG: FANTECH (GRAINGER) FR150 .67 AMPS/115V/1 PH OR EQUAL

TF-1 EXHAUST FAN: INLINE TYPE, DIRECT DRIVE,140 CFM@0.25 IN W.C., MOUNTING BRACKET, SPEED CONTROL, WORM DRIVE CLAMPS, FLEX PIPE FOR CONNECTIONS, CORROSION RESISTANT MFG: FANTECH (GRAINGER) FR150 .67 AMPS/115V/1 PH OR EQUAL

EF-3 EXHAUST FAN: INLINE TYPE, DIRECT DRIVE. 75 CFM@ 0.35 N W.C. CEILING TYPE BATH FAN, SPEED CONTROL, MFG: GREENHECK SP-B110 1.1 AMPS/115V/1 PH OR EQUAL

RP-1, RP-2 RADIANT PANEL HEATERS: 375 WATTS, 24 X 48 WITH SURFACE MOUNTING BRACKET MFG: MARLEY ATH2442 W/ SURFACE MOUNTING BRACKET, 375 WATTS/ 115 V / 1 PH

TH-1 THERMOSTAT: REMOTE BULB THERMOSTAT, 0-100 F RANGE, 3-10 F DIFFERENTIAL. WITH CAPILLARY, WALL BRACKET, AND BULB. MFG: HONEYWELL F675A1045 OR EQUAL 8.0 AFL,/ 120 V / 1 PH

TH-1 THERMOSTAT: WALL TYPE LINE VOLTAGE THERMOSTAT 44F TO 86 F RANGE, HEATING ONLY MFG: HONEYWELL T451A3005 OR EQUAL

CF-1 CEILING FAN: 36 INCH DIAMETER CEILING FAN WITH SPEED CONTROL: MFG: LEADING EDGE 36201 WITH 12003 SPEED CONTROL 1 AMP / 120 V / 1 PH OR EQUAL

OS-1, OS-2: OIL STOVE: SELF CONTAINED UNIT. 22,000 BTUH OUTPUT. 90 % EFFICIENCY, SELF CONTAINED WITH BUILT IN CONTROL 275 WATTS / 120 V / 1 PH OR EQUAL MFG: TOYOTOMI OM-22 OR EQUAL

CG-1 CEILING GRILLE: 8 X 8 BAR GRILLE, NO VOLUME DAMPER MFG: SHOEMAKER 901 OR EQUAL

SEQUENCE OF OPERATION:

RP-1, RP-2 CYCLE ON TH-1 SET POINT 60 F

TF-1 CYCLES ON TH-2. SET POINT ADJUSTIBLE FAN MOVES WARM AIR FROM ROOF PEAK TO OFFICE/LAB

CF-1 OPERATES CONTINUOUSLY. CONTROLLED BY SPEED CONTROL

EF-2 OPERATES ON WALL SWITCH

OS-1, OS-2 OIL STOVES OPERATE ON INTEGRAL CONTROLS

EF-1, MD-1, MD-2 OPERATION: EF-1, MD-1, MD-2 ARE INTERLOCKED. WHEN WALL SWITCH OUTSIDE CHLORINATOR ROOM IS SET TO "ON" EF-1 STARTS AND MD-1, MD-2 OPEN TO FULL OPEN. SWITCH ACTIVATES FLASHING RED LIGHT(LABELED "UNSAFE TO ENTER"). LIGHT IS ON FOR 3 MINUTES TO PURGE AREA AND AT THE END OF THE 3 MINUTE TIME A GREEN LIGHT (LABELED "SAFE TO ENTER") IS ILLUMINATED. WHEN OPERATOR LEAVES WORK AREA THE SWITCH IS SET TO "OFF" AND EF-1 STOPS, MD-1, MD-2 DAMPERS CLOSE.

CAPSTONE ENGINEERING LLC
MECHANICAL ENGINEERS
12110 BUSINESS BLVD STE 6, PMB 169
EAGLE RIVER, ALASKA 99577
TELEPHONE & FAX 541-884-6065

STATE OF ALASKA — 49TH — FREDERICK H. BELZ — ME 6498 — REGISTERED PROFESSIONAL ENGINEER

MARCH 4, 2011

HVAC AND PLUMBING PLAN
ATKA WATER PLANT
ATKA, ALASKA

MARCH 4, 2011
DRAWN: F.H. BELZ
SCALE: AS NOTED
REVISED:
JOB NO. C379

SHEET NO. M4.1

G:\ACAD\ATKA\2009 Water System Upgrades\C379 M 4.1 MECH PLAN.dwg, 3/4/2011 10:20:51 AM, Flash, \\CE2MAIN\LANIER MP C2050/LD520C PCL 6

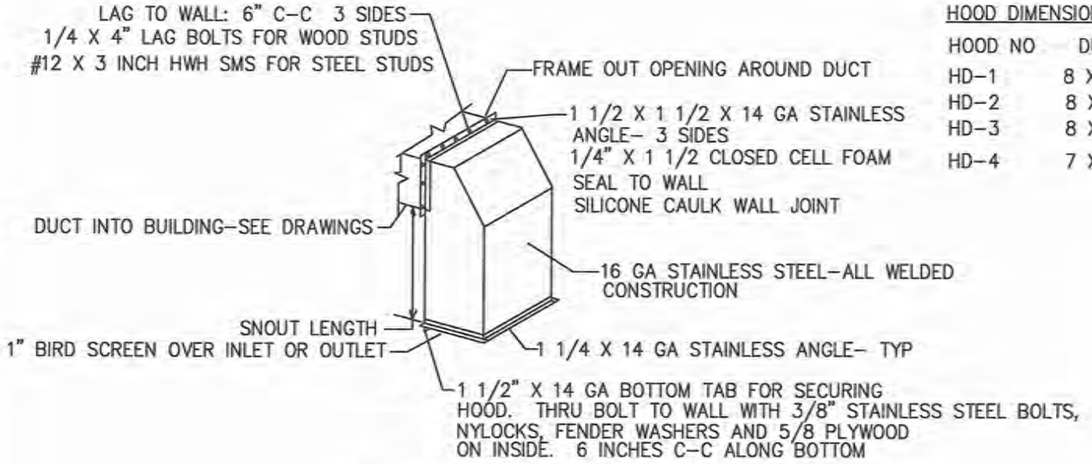

ATKA ARCTIC HOODS

NO SCALE

HOOD DIMENSIONS

HOOD NO	DUCT	HOOD SIZE	SNOUT LENGTH
HD-1	8 X 6	8"W X 6"DEEP	18 INCHES
HD-2	8 X 8	8"W X 4"DEEP	18 INCHES
HD-3	8 X 8	8"W X 4"DEEP	18 INCHES
HD-4	7 X 7	7"W X 3"DEEP	18 INCHES

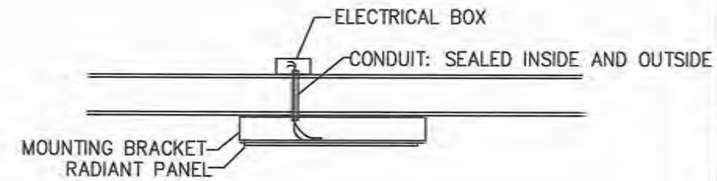

RP-1, RP-2 CONNECTION DETAIL

NO SCALE

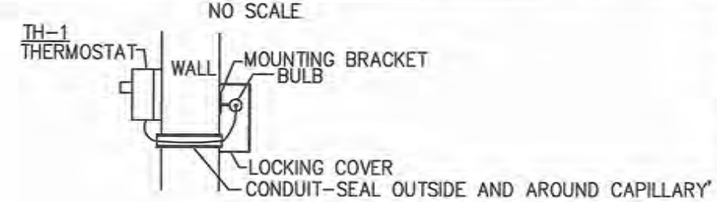

TH-1 MOUNTING DETAIL

NO SCALE

OST-1 300 GALLON SINGLE WALL TANK
39" DIA X 60" LONG-MFG: ANCHORAGE TANK AT300F OR EQUAL
PROVIDE STAND AND CABLE TIE DOWNS AS SHOWN

OF-1 INLINE OIL FILTER MFG: GENERAL FILTER OR EQUAL

FUSIBLE VALVE: FIROMATIC 3/4" SCREW FITTING TYPE OR EQUAL

OIL PIPING: SCH 80 SCREWED BLACK STEEL, WROUGHT FITTINGS

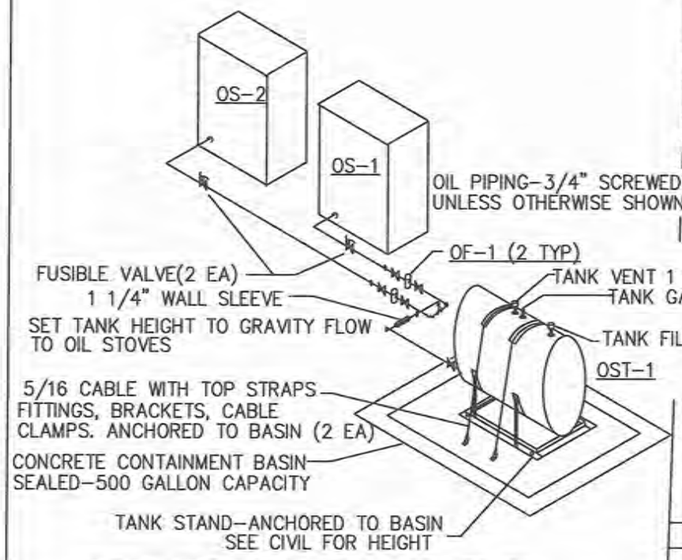

OIL PIPING DETAILS

NO SCALE

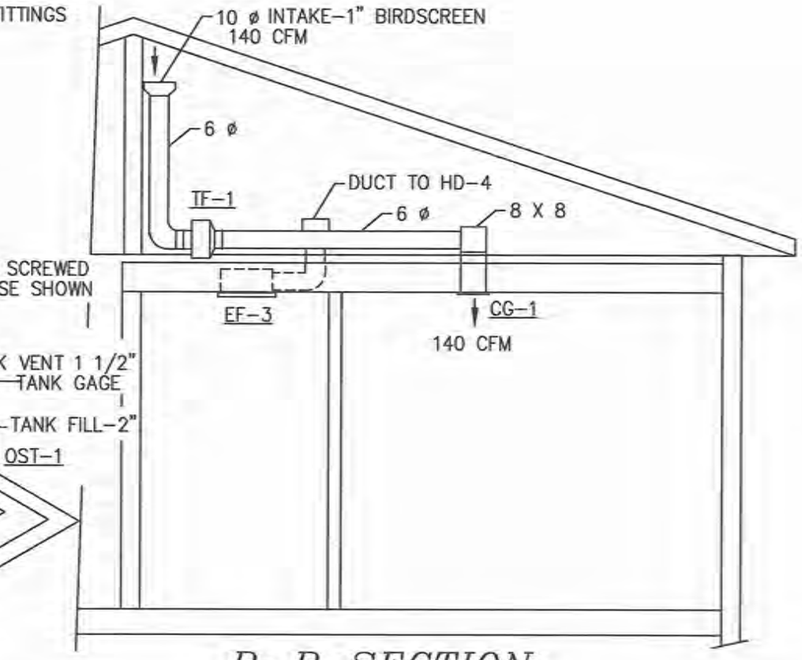

B-B SECTION

SCALE: 1/4"=1'-0"

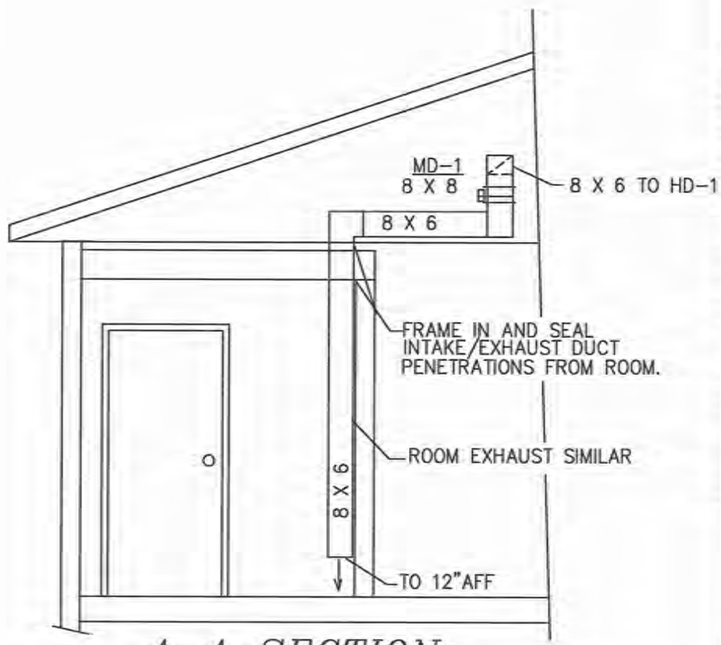

A-A SECTION

SCALE: 1/4"=1'-0"

CAPSTONE ENGINEERING LLC
MECHANICAL ENGINEERS
12110 BUSINESS BLVD STE 6 PMB 169
EAGLE RIVER, ALASKA 99577
TELEPHONE & FAX 541-884-8065

STATE OF ALASKA
49TH
REGISTERED PROFESSIONAL ENGINEER
MARCH 4, 2011

HVAC AND PLUMBING DETAILS
ATKA WATER PLANT
ATKA, ALASKA

MARCH 4, 2011
DRAWN: F.H. BELZ
SCALE: AS NOTED
REVISED:
JOB NO. C379
SHEET NO. M4.2

G:\ACAD\ATKA\2009 Water System Upgrades\C379 M 4.2 MECH DETAILS.dwg, 3/4/2011 10:21:14 AM, Flash, \\CE2MAIN\LANIER MP C2050/LD520C PCL 6

PLUMBING FIXTURE CONNECTION SCHEDULE					
FIXTURE	WASTE	VENT	CW	HW	DESCRIPTION
WC-1	3"	2"	1/2"	-	FLOOR MOUNT TANK TYPE 1.6 GPF
LS-1	1 1/2"	1 1/4"	1/2"	1/2"	WALL MOUNT LAVATORY-
FD-1	2	1 1/2"	-	-	FLOOR DRAIN
WH-1			1/2"	1/2"	TANK TYPE 4 GALLON ELECTRIC HEATER
SS-1	2"	1 1/2"	1/2"	1/2"	FLOOR MOUNT LAUNDRY SINK
LS-1	2"	1 1/2"	1/2"	1/2"	COUNTER MOUNTED LAB SINK
HB-1			1/2"		INDOOR HOSE BIB
EW-1	1 1/2"	1 1/4"	1/2"	1/2"	EYE WASH UNIT-WITH TEMPERED WATER VALVE

PLUMBING FIXTURES

WC-1: WATER CLOSET: FLOOR MOUNT, FLUSH TANK 1.6 GPM PER FLUSH
COMFORT HEIGHT, OPEN FRONT SOLID PLASTIC SEAT W/METAL HINGES
MFG: AM STD CADET OR EQUAL WHITE COLOR

LS-2: LAVATORY: WALL MOUNT, 4 INCH FAUCET MOUNTING, CAST IRON,
SINGLE LEVER MIXING FAUCET. WHITE COLOR SINK
MFG: AM STD REGALYN W/ DELTA SINGLE LEVER HANDLE FAUCET OR EQUAL-

WH-1: WATER HEATER: 4 GALLON TANK TYPE HEATER. 1500 WATT/ 120 V / 1 PH
MFG: ARISTON GL4TI (GRAINGER 4JY90) OR EQUAL

SS-1: SERVICE SINK: FLOOR MOUNT MOLDED STONE TYPE SINK, SINGLE BASIN
MFG: FIAT FL-1 WITH LEGS AND DELTA SINGLE LEVER KITCHEN FAUCET OR EQUAL

LS-1: LAB COUNTER SINK: COUNTER MOUNTED, 18 GA STAINLESS STEEL SINK, SINGLE BASIN,
BASIN IS APPROX 18 W X 16 FR X 9" DEEP. FAUCET IS GOOSENECK MIXING FAUCET 4" C-C MOUNTING
MFG: JUST, ELKAY OR APPROVED EQUAL

HB-1: HOSE BIB: INDOOR TYPE FOR COLD WATER, WHEEL HANDLE TYPE

FD-1: MEDIUM DUTY CAST IRON FLOOR DRAIN. NICKEL FINISH COVER. MFG SMITH 2005 OR EQUAL

PLUMBING MATERIALS

POTABLE WATER PIPING: TYPE L COPPER, NO LEAD SOLDER, WROUGHT FITTINGS.
INSULATE HW LINES 1/2" CLOSED CELL FOAM
WASTE AND VENT: ABS
WATER STOPS: WHEEL HANDLE TYPE
WATER SUPPLIES: FLEXIBLE WITH PLATING
PIPE HANGERS: SEE PROCESS SPECIFICATIONS

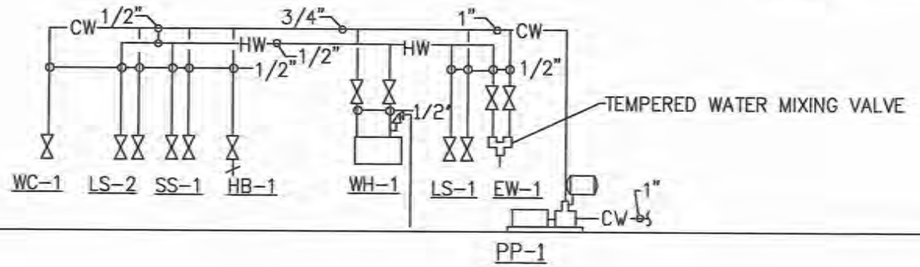

WATER PLANT LOCAL WATER DISTRIBUTION

NO SCALE

CAPSTONE ENGINEERING LLC
MECHANICAL ENGINEERS
12110 BUSINESS BLVD STE 6 PMB 169
EAGLE RIVER, ALASKA 99577
TELEPHONE & FAX 541-894-8065

STATE OF ALASKA
49TH
FREDERICK H BELZ
ME 6696
REGISTERED PROFESSIONAL ENGINEER

MARCH 4, 2011

PLUMBING DETAILS
ATKA WATER PLANT
ATKA, ALASKA

DRAWN: F.H. BELZ
SCALE: AS NOTED
REVISED:
JOB NO: C379

SHEET NO.
M4.3

G:\ACAD\ATKA\2009 Water System Upgrades\C379 M 4.3 PLUMBING DETAILS.dwg, 3/4/2011 10:21:37 AM, Flash, \\CE2MAIN\LANIER MP C2050\LD520C PCL 6

REF. OR TAG NO.	EQUIPMENT DESCRIPTION	LOCATION	MANUFACTURER'S SPECIFICATION	SETPOINT
AIR BLOWERS				
AB-1	AIR BLOWER, 60 SCFM AT 8.5 PSIG, WITH SELF CONTAINED AIR INTAKE AND FILTER, MUFFLER, 208 VAC 3-PH MOTOR	NEAR PRESSURE FILTER PF-1	UNIMAC SERIES 3M	8.5 PSI OR BEST SETTING TO GIVE GOOD AGITATION OF FILTER MEDIA DURING AIR SCOUR
AIR RELEASE, AUTOMATIC				
AV-1	AIR/VACUUM VALVE FOR RELEASE OF AIR TRAPPED, 1" FIPT INLET AND OUTLET, OPERATION PRESSURE BELOW 150 PSI	ON TOP OF PRESSURE FILTERS PF-1 AND PF-2	NETAFIM 2" COMBINATION AIR AND VACUUM RELIEF AIR VENT WITH CONTINUOUS ACTING AIR VENT	N/A
AV-2	AIR/VACUUM VALVE FOR RELEASE OF AIR TRAPPED, 1" FIPT INLET AND OUTLET, OPERATION PRESSURE BELOW 150 PSI	ON WATERMAIN BEFORE IT EXITS THE WTP BUILDING	NETAFIM 2" COMBINATION AIR AND VACUUM RELIEF AIR VENT WITH CONTINUOUS ACTING AIR VENT	N/A
BACKFLOW PREVENTERS				
BF-1	BACKFLOW PREVENTER, DOUBLE CHECK VALVE ASSEMBLY, 4", 300 SERIES STAINLESS STEEL, 175 PSI, 33-110° F	BACKWASH WATER LINE DOWNSTREAM OF BACKWASH PUMP BF-1	WATTS SERIES 774 (MODEL #774, 4") WITH ISOLATION GATE VALVES AND TESTING PORTS	N/A
CHEMICAL FEED PUMPS, EQUIPMENT				
CF-1	ELECTRONIC CHEMICAL FEED PUMP, CAPABLE OF 1.00 GPH 3/8" OD TUBING CONNECTIONS, 120 VAC, MANUAL OR ANALOG 4-20 MA OPERATION	IN AREA OF WATER TREATMENT PLANT BETWEEN BP-1 AND PF-1	LMI SERIES AA ELECTRONIC METERING PUMP, PVC WET ENDS, MODEL #AA951-450HI	AS REQ'D TO ACHIEVE PROPER COAGULANT FEED, APPROXIMATELY 3 PPM
CF-2	ELECTRONIC CHEMICAL FEED PUMP, CAPABLE OF 1.00 GPH 3/8" OD TUBING CONNECTIONS, 120 VAC, MANUAL OR ANALOG 4-20 MA OPERATION	IN AREA OF WATER TREATMENT PLANT BETWEEN BP-1 AND PF-2	LMI SERIES AA ELECTRONIC METERING PUMP, PVC WET ENDS, MODEL #AA951-450HI	AS REQ'D TO ACHIEVE PROPER HYPOCHLORITE FEED, APPROXIMATELY 1 PPM
CONTROL VALVES				
CV-1	FLOW CONTROL VALVE, RUBBER VARIABLE ORIFICE SIZE TYPE, 2" FIPT CONNECTIONS, 20 GPM RATED	BETWEEN PRESSURE FILTERS	DOLE VALVE 2" CONNECTIONS 20 GPM	FIXED AT 20 GPM
CV-2	FLOW CONTROL VALVE, RUBBER VARIABLE ORIFICE SIZE TYPE, 2" FIPT CONNECTIONS, 20 GPM RATED	BETWEEN PRESSURE FILTERS	DOLE VALVE 2" CONNECTIONS 20 GPM	FIXED AT 20 GPM
FLOW METERS, TOTALIZERS, CONTROLLERS, INDICATORS				
M-1	FLOWMETER, MAGNETIC TYPE, 2"FLANGES, SENSOR WITH REMOTE MOUNTED ELECTRONICS AND READOUT	RAW WATER PIPING IN WATER TREATMENT ROOM	ENDRESS + HAUSER 50W, 2" FLANGED	N/A
M-2	FLOWMETER, BRONZE, TURBINE 4-100 GPM THROUGH 2" PVC PIPE, WITH BRONZE STRAINER	FILTERED WATER PIPING IN WATER TREATMENT ROOM	NEPTUNE BRONZE HIGH PERFORMANCE TURBINE METER, 2", WITH STRAINER, CALIBRATED IN US GALLONS, OVAL FLANGES, DIRECT READING BRONZE BOX AND COVER	N/A
M-3	FLOWMETER, BRONZE, TURBINE 4-500 GPM THROUGH 4" PIPE, WITH BRONZE STRAINER	WATER MAIN EXITING WTP BUILDING TO TOWN	NEPTUNE BRONZE HIGH PERFORMANCE TURBINE METER, 4", WITH STRAINER, CALIBRATED IN US GALLONS, OVAL FLANGES, DIRECT READING BRONZE BOX AND COVER	N/A
M-4	FLOWMETER, MAGNETIC TYPE, 4"FLANGES, SENSOR WITH REMOTE MOUNTED ELECTRONICS AND READOUT	BACKWASH WATER LINE DOWNSTREAM OF DOUBLE CHECK VALVE BW-1	ENDRESS + HAUSER 50W, 4" FLANGED	N/A
FLOW SWITCH				
FS-1	FLOW SWITCH, ELECTRONIC, USING HEATER & TEMPERATURE SENSING FOR FLOW (0.01 TO 0.5'/SEC), 3/4" MPT CONNECTION, 115 VAC, 2" INSERTION LENGTH	RAW WATER PIPING IN WATER TREATMENT ROOM	FLUID COMPONENTS INTER-NATIONAL (FCI) MODEL FLT93B-AB00	UPPER END OF RANGE, ABOUT 0.5 FT/SEC
FS-2	FLOW SWITCH, ELECTRONIC, USING HEATER & TEMPERATURE SENSING FOR FLOW (0.01 TO 0.5'/SEC), 3/4" MPT CONNECTION, 115 VAC, 2" INSERTION LENGTH	FILTERED WATER PIPING IN WATER TREATMENT ROOM	FLUID COMPONENTS INTER-NATIONAL (FCI) MODEL FL93B-AB00	UPPER END OF RANGE, ABOUT 0.5 FT/SEC
HVAC				
BDD-1	WEIGHTED BACKDRAFT DAMPER 8"W X 8"H	ON TOP OF LAB CEILING LID ABOVE COUNTER	RUSKIN CBD-2 OR EQUAL	N/A
FC-1	CEILING FAN, 36" DIAMETER WITH SPEED CONTROL	CENTER OF CEILING OF WATER PLANT ROOM	LEADING EDGE 36201 WITH 12003 SPEED CONTROL, 1A, 120V, 1 PH OR EQUAL	SPEED AS DESIRED BY OPERATOR
EF-1	EXHAUST FAN, INLINE TYPE DIRECT DRIVE, 130 CFM @0.4"WC, MOUNTING BRACKET, SPEED CONTROL, WORM DRIVE CLAMPS, FLEX PIPE FOR CONNECTIONS, CORROSIO0N RESISTANT	ON CEILING LID ABOVE CHLORINE ROOM	FANTECH (GRAINGER) FR150, 0.67 AMPS/115V/1PH OR EQUAL	N/A
EF-2	EXHAUST FAN, INLINE TYPE DIRECT DRIVE, 165 CFM @0.4"WC, MOUNTING BRACKET, SPEED CONTROL, WORM DRIVE CLAMPS, FLEX PIPE FOR CONNECTIONS, CORROSIO0N RESISTANT	ON CEILING LID ABOVE LAB ROOM	FANTECH (GRAINGER) FR150, 0.67 AMPS/115V/1PH OR EQUAL	N/A
EF-3	EXHAUST FAN, INLINE TYPE, CEILING TYPE BATH FAN 75 CFM@ 0.35 IN WC, SPEED CONTROL	ON CEILING OF LAB BATHROOM	GREENHECK SP-B110, 1.1 AMPS/115VAC/1 PH OR EQUAL	N/A
MD-1	MOTORIZED DAMPER, 8"W X 8"H, LOW LEAKAGE, 2-POSITION DAMPER, SPRING RETURN	ON OUTSIDE WALL BETWEEN ENTRANCE AND CHLORINE ROOM	RUSKIN CD-50 OR EQUAL, BELIMO LF120 DAMPER MOTOR, 120 VAC 5.5W 35 IN-LB OR EQUAL	N/C
MD-2	MOTORIZED DAMPER, 8"W X 8"H, LOW LEAKAGE, 2-POSITION DAMPER, SPRING RETURN	ON EXHAUST DUCT ABOVE CEILING OF CHLORINE ROOM	RUSKIN CD-50 OR EQUAL, BELIMO LF120 DAMPER MOTOR, 120 VAC 5.5W 35 IN-LB OR EQUAL	N/C
OS-1, 0S-2	OIL HEATER, SELF CONTAINED UNIT, 22,000 BTU/HR OUTPUT, 90% EFFICIENCY, BUILT-IN TEMPERATURE CONTROL, 275 WATTS/120V/1 PH	OUTSIDE WALL OF WATER TREATMENT ROOM NEAR FILTERS	TOYOTOMI OM-22 OR EQUAL	65F ON OS-1 AND 60F ON OS-2 INITIAL SETTING
RP-1, RP-2	RADIANT PANEL HEATERS, 375 WATTS, 24X40 WITH SURFACE MOUNTING BRACKET	CEILING IN CHLORINE ROOM	MARLEY ATH2442 WITH SURFACE MOUNTING BRACKET, 375WATTS/115V/1 PH	50F
TF-1	EXHAUST FAN, INLINE TYPE DIRECT DRIVE, 140 CFM @0.4"WC, MOUNTING BRACKET, SPEED CONTROL, WORM DRIVE CLAMPS, FLEX PIPE FOR CONNECTIONS, CORROSIO0N RESISTANT	ON CEILING LID ABOVE LAB BATHROOM	FANTECH (GRAINGER) FR150, 0.67 AMPS/115V/1PH OR EQUAL	N/A
TS-1	REMOTE BULB THERMOSTAT, 0-100F RANGE, 3-10F DIFFERENTIAL WITH CAPILLARY, WALL BRACKET, AND BULB	ON WATER PLANT SIDE OF CHLORINE ROOM WALL	HONEYWELL F675A1045 OR EQUAL, 8 FLA, 120V, 1 PH OR EQUAL	50F INITIAL
TS-2	THERMOSTAT, WALL TYPE, LINE VOLTAGE, 44F TO 86F RANGE, HEATING ONLY	ON LAB WALL	HONEYWELL T451A3005 OR EQUAL	AS DESIRED BY OPERATOR

RECORD DRAWING CERTIFICATE
THESE DRAWINGS REFLECT RECORDED INFORMATION OBTAINED DURING CONSTRUCTION. INFORMATION PROVIDED HEREIN IS ACCURATE TO THE BEST OF MY KNOWLEDGE.
NAME _____ DATE _____

SCALE: AS SHOWN

CONSTRUCTION RECORD
FIELD BOOK
STAKING
FOREMAN
AS-BUILT
INSPECTOR

STATE OF ALASKA — LEE A. PHILLIPS — 10TH — REGISTERED PROFESSIONAL ENGINEER

2009 WATER SYSTEM UPGRADES
EQUIPMENT LIST
ATKA, ALASKA

CE2 ENGINEERS, INC.
PO BOX 220648 ANCHORAGE, AK 99503 PH 907-349-1010 FAX 907-349-1018

REVISION	BY	DATE

Project No. _____ Date MAY 2010 Designed LAP Drawn _____ Approved LAP

Sheet No: M5.1

G:\ACAD\ATKA\2009 Water System Upgrades\M5.1_2_3 Equip Sht REV 2.dwg, 5/3/2011 2:17:43 PM, Flash, LANIER MP C2050_LD520C PCL 6.pc3

REF. OR TAG NO.	EQUIPMENT DESCRIPTION	LOCATION	MANUFACTURER'S SPECIFICATION	SETPOINT
INSTRUMENTATION				
CR-1	CIRCULAR CHART RECORDER, 10" DIAMETER CHARTS, 2 PEN, 4-20 MA IMPUT FROM TURBIDIMTERS, 120VAC POWERED	IN INSTRUMENT-ATION AREA NEAR PRESSURE FILTERS	HONEYWELL DR4300 SERIES DIGITAL CHART RECORDER: MODEL #DR4312-0000-C0100-0000-0000-00-000-00	N/A
SCD-1	STREAMING CURRENT DETECTOR, 4-20 MA OUTPUT, WITH AUTOMATIC JETWASH	WATER TREATMENT PLANT NEAR CF-1	MILTON ROY SC5200 WITH AUTOMATIC JET WASHER AND INLET CYCLONE SEPARATPR	DETERMINED BY JAR TESTING
TU-1, TU-2	TURBIDIMETER, INCANDESCENT NEPHELOMETER, WITH CONTROLLER TO HANDLE TWO TURBIDIMETERS	NEAR PRESSURE FILTERS	TWO HACH FILTER 1720E NEPHELOMETER AND ONE SC200 CONTROLLER WITH 4-20MA OUTPUT TO CIRCULAR CHART RECORDER CR-1	N/A
VFD MOTOR CONTROLS				
MC-AB1	7.5 HP SOFT START, 208 VAC 3 PH, NEMA 12 ENCLOSURE	MAIN WATER TREATMENT AREA, LOWER FLOOR, NEAR AB-1 AND PRESSURE FILTERS	ALLEN-BRADLEY POWER FLEX 70	N/A
MC-BW1	10 HP SOFT START, 208 VAC 3 PH, NEMA 12 ENCLOSURE	MAIN WATER TREATMENT AREA, LOWER FLOOR, NEAR BW-1	ALLEN-BRADLEY POWER FLEX 70	N/A
PRESSURE FILTERS				
PF-1	MULTIMEDIA PRESSURE FILTER	WATER TREATMENT AREA	FOR CONSTRUCTION DETAILS SEE SHEET M2.4	N/A
PF-2	MULTIMEDIA PRESSURE FILTER	WATER TREATMENT AREA	FOR CONSTRUCTION DETAILS SEE SHEET M2.4	N/A
PRESSURE GAUGES				
DP-1 DP2	DIFFERENTIAL PRESSURE GAUGE, 4 1/2" DIA FACE, 1/4" NPT PORTING IN LINE, AUX. SWITCH, PANEL MOUNTED, 150 PSI RATED, 0-10 PSID, AIR BLEEDING FITTINGS	NEXT TO PRESSURE FILTER PF-2 ON WALL. DP-1 MONITORS PF-1 AND DP-2 MONITORS PF-2	ORANGE RESEARCH #1203PGS-5-E-C-4.5-F-A-10, CONDUIT CONNECTION,	10 PSID ON AUXILIARY SWITCH
PG-1	PROCESS PRESSURE GAUGE, THERMOPLASTIC CASE, 4-1/2" DIAMETER FACE, 0-60 PSIG, SILICONE FILLED, SS WETTED INTERNALS, 1/2" MPT BOTTOM PIPING CONNECTION.	MULTIPLE LOCATIONS	WIKA TYPE 23X.34, CATALOG #9834826	N/A
PG-2	GAGE FOR MONITORING THE DEPTH OF WATER IN WATER STORAGE TANK WT-1. 6" DIAMETER FACE, 0-15 PSIG, 0-35 FT. ALTITUDE, MANUAL SET HAND. 1/4" MPT BOTTOM PIPING CONNECTION, USA BLUE BOOK CATALOG #ME-65075	WATER TREATMENT AREA ON 8" PVC PIPE GOING OUT TO COMMUNITY	USA BLUE BOOK CATALOG #ME-85075	N/A
PUMPS, CIRCULATING, BACKWASH, EFFLUENT, PRESSURE, SEWAGE, TRANSFER, ETC.				
BP-1	5-STAGE CENTRIFUGAL PUMP, 40 GPM @ 60' TDH, STAINLESS STEEL HOUSING, , 2" 300# FLANGE SUCTION AND DISCHARGE, 1.0 HP 17500 RPM 208V 3 PHASE	NEAR RAW WATER OUTLET IN WATER TREATMENT PLANT	5 STAGE STAINLESS CENTRIFUGAL PUMP, GOULDS 15SVFC8F60 1750RPM PREMIUM EFFICIENCY TEFC MOTOR, 208 V 3 PH	N/A
BW-1	END SUCTION, CLOSE COUPLED CENTRIFUGAL PUMP, STAINLESS STEEL, 4" FLG SUCTION X 3" FLG DISCH., 208 V 3-PH, 1750 RPM TEFC MOTOR, 10 HP, 300 GPM @ 60' TDH	ON SUPPLY PIPING IN WTP OUT OF WATER TANK WT-1	G&L CODE 23SH4L52C (23SH, 3 X 4-8. WITH 10 HP 1750 TEFC 208 VAC 3-PH MOTOR AND SIZE D 8-7/16" DIA IMPELLER	100 GPM SLOW FILL, UP TO 300 GPM BACKWASH
CP-1	IN LINE CENTRIFUGAL PUMP, BRONZE, 3/4" SWEAT CONNECTIONS, 9.5 GPM @ 6' TDH, 80 WATTS, 115 VAC	NEAR AREA WHERE PIPING LEAVES WTP AND GOES TO WATER TANK WT-1	GRUNDFOS MODEL #UP 15-18B7	9.5 GPM
PP-1	END SUCTION PRESSURE PUMP, WITH INTEGRAL PRESSURE TANK, STAINLESS AND THERMOPLASTIC CONSTRUCTION, 1-1/4 FIPT SUCTION X 1" FIPT DISCHARGE, WITH PRESSURE AND FLOW SWITCH AND RUN DRY PROTECTION	NEAR AREA WHERE PIPING LEAVES WTP AND GOES TO WATER TANK WT-1	GRUNDFOS MODEL #MQ 35 , CAT #968 60172 115/60/1PH	6.5 GPM @ 40 PSI, PRESSURE RANGE 20-40 PSI
TP-1	END SUCTION MAGNETIC DRIVE CENTRIFUGAL PUMP, 8 GPM @ 5'TDH, 1/2 MIPT DISC X 3/4 FIPT SUCTION, 1/20 HP TE/SUB MOTOR, 115 VAC, WITH CORD	CHLORINE ROOM BETWEEN CT-2 AND CT-3	MARCH MANUFACTURING MODEL LC-3CP-MD	N/A
PRESSURE RELIEF/REGULATOR VALVES				
PV-1	PRESSURE RELIEF VALVE, BRONZE, 1" FNPT INLET AND OUTLET, 100 PSI	TOP OF PRESSURE FILTERS, NO ISOLATION VALVES	WATTS MODEL 140S-100PSI	100 PSIG
STATIC MIXER, MOTORIZED MIXER				
MM-1	MOTORIZED MIXER, 1725 RPM, FLANGE MOUNT, TOTALLY ENCLOSED 1/20 HP, STAINLESS STEEL PROPELLER, SHAFT, COUPLER, EPOXY COATED, FACTORY POWER CORD, 115V, 30" LONG SHAFT	IN WATER TREATMENT PLANT NEAR CF-1 AND CF-2	WINGERT F-M-TE-PRP/WRD-EK-SCP-316-30"	FOR CHEMICAL MIXING IN CT-1 AND CT-3
SM-1	WAFER-TYPE STATIC MIXER, FITS BETWEEN 3" 150# FLANGES, PVC MOUNTING RING, 0.7 BEETA, 1/8" EPDM GASKETS, INJECTION QUILL INCLUDED	IN WATER TREATMENT PLANT NEAR CF-1	WESTFALL MFG. WAFER STYLE, 2", MODEL 2800, PVC MOUNTING RING WITH 1/2" PVC QUILL AND BUILT-IN CHECK VALVE.	DESIGNED FOR 40 GPM OPERATION
THERMOMETERS				
TH-1	THERMOMETER, DIGITAL, SELF-POWERED, VARIABLE ANGLE MOUNTING, RANGE -40F TO +300F, WITH THERMOWELL	VARIOUS LOCATIONS, AS REQUIRED	WEISS #DVU35 ELECTRONIC THERMOMETER (INDUSTRIAL GLASS THERMOMETER STEM ASSEMBLY, 3 1/2" STEM LENGTH), WITH E35-75BS 3/4" NPT SOCKET	N/A
WATER HEATERS				
WH-1	ITEM # 1PZ78 WATER HEATER, 10 GAL, 120 VAC, 1500 W PLUG IN, 1 HEATING ELEMENT, 3/4" T&P VALVE, 3/4" NPT H & C CONNECTIONS	ON LID ABOVE LAB AND BATHROOM	VANGUARD #3648, GRAINGER #1PZ78 OR EQUAL	110F

RECORD DRAWING CERTIFICATE
THESE DRAWINGS REFLECT RECORDED INFORMATION OBTAINED DURING CONSTRUCTION. INFORMATION PROVIDED HEREIN IS ACCURATE TO THE BEST OF MY KNOWLEDGE.
NAME _____ DATE _____

SCALE: AS SHOWN

BAR IS ONE INCH ON ORIGINAL DRAWING. IF NOT ONE INCH ON THIS SHEET ADJUST SCALE ACCORDINGLY

CONSTRUCTION RECORD
FIELD BOOK
STAKING
FOREMAN
AS-BUILT
INSPECTOR

STATE OF ALASKA — REGISTERED PROFESSIONAL ENGINEER — LEONARD A. PETERSON — 9455 — 10-31-2010

2009 WATER SYSTEM UPGRADES

EQUIPMENT LIST

ATKA, ALASKA

CE2 ENGINEERS, INC.
PO BOX 232948 ANCHORAGE, AK 99523 PH: 907-349-1010 FAX: 907-349-1015

REVISION	BY	DATE

Project No. ____ Date MAY 2010 Designed LAP Drawn ____ Approved LAP

Sheet No. M5.2

G:\ACAD\ATKA\2009 Water System Upgrades\M5.1_2_3 Equip Sht REV 2.dwg, 5/3/2011 2:17:35 PM, Flash, LANIER MP C2050_LD520C PCL 6BLK WHIT.pc3

REF. OR TAG NO.	EQUIPMENT DESCRIPTION	LOCATION	MANUFACTURER'S SPECIFICATION	SETPOINT
TANKS				
CT-1	30 GAL VERTICAL MIXING TANK WITH LID, POLYETHYLENE, 18" DIA X 31"H, MOLDED GALLONAGE AND LITER MARKINGS ON SIDE, NSF-61 APPROVED	NEAR FILTER PF-1	SNYDER INDUSTRIES PART #568-0000N--L	N/A
CT-2	30 GAL VERTICAL MIXING TANK WITH LID, POLYETHYLENE, 18" DIA X 31"H, MOLDED GALLONAGE AND LITER MARKINGS ON SIDE, NSF-61 APPROVED	IN CHLORINE ROOM NEAR CT-3	SNYDER INDUSTRIES PART #568-0000N--L	N/A
CT-3	55 GAL VERTICAL MIXING TANK WITH LID, TOTAL DRAIN, POLYETHYLENE, 22" DIA X 40"H, MOLDED GALLONAGE AND LITER MARKINGS ON SIDE, NSF-61 APPROVED WITH 12" HIGH PLASTIC TANK STAND	IN CHLORINE ROOM NEAR CT-2	SNYDER INDUSTRIES PART #579-0000N--L, WITH 1370000N-- 12" H TANK STAND	N/A
WT-1	INSULATED WATER TANK, 140,000 GAL, 39.6' ID X 16' TALL, W/ SS INTERNALS	OUTSIDE OF WATER TREATMENT PLANT	CUSTOM MADE TANK AND APPURTENANCES, SEE DRAWING C4.1 AND C4.2	N/A
PLUMBING FIXTURES AND COMPONENTS				
EW-1	EYEWASH STATION, SELF-STANDING, PLASTIC BOWL	CHLORINE ROOM BETWEEN CT-2 AND CT-3	BRADLEY S19-210, GRAINGER 4R961	N/A
LS-1	LAB COUNTER SINK: COUNTER MOUNTED, 18 GA STAINLESS STEEL SINK, SINGLE BASIN, BASIN IS APPROX 18 W X 16 FR X 9" DEEP. FAUCET IS GOOSENECK MIXING FAUCET 4" C-C MOUNTING	LABORATORY	JUST, ELKAY OR APPROVED EQUAL	N/A
LS-2	LAVATORY SINK, WALL MOUNT, 4 INCH FAUCET MOUNTING, CAST IRON, SINGLE LEVER MIXING FAUCET, WHITE COLOR SINK	BATHROOM	AM STD REGALYN W/ DELTA SINGLE LEVER HANDLE FAUCET OR EQUAL	N/A
SS-1	SERVICE SINK, ENAMELED CAST IRON, BLANK BACK W/ SS RIM GUARD AND WALL HANGER SUPPORTS w/ TRAP AND FAUCET	WATER TREATMENT AREA	KOHLER BANNON K-6718 SERVICE SINK, KOHLER ADJUSTABLE TRAP K-6673, KOHLER KINLOCK FAUCET K-8907	N/A
FD-1	MEDIUM DUTY CAST IRON FLOOR DRAIN. NICKEL FINISH COVER.	VARIOUS LOCATIONS	SMITH 2005 OR EQUAL	N/A
HB-1	HOSE BIB: INDOOR TYPE FOR COLD WATER, WHEEL HANDLE TYPE			
WC-1	WATER CLOSET: FLOOR MOUNT, FLUSH TANK 1.6 GPM PER FLUSH COMFORT HEIGHT, OPEN FRONT SOLID PLASTIC SEAT W/METAL HINGES	BATHROOM	AM STD GLENWALL OR EQUAL WHITE COLOR, w/ FLOOR MOUNT, PVC ADAPTER TYPE CLOSET CARRIER (16123) OR EQUAL	N/A
WH-1	WATER HEATER: 4 GALLON TANK TYPE HEATER: 1500 WATT/ 120 V / 1 PH	ABOVE LAB CEILING	ARISTON GL4TI (GRAINGER 4JY90) OR EQUAL	N/A

RECORD DRAWING CERTIFICATE

THESE DRAWINGS REFLECT RECORDED INFORMATION OBTAINED DURING CONSTRUCTION. INFORMATION PROVIDED HEREIN IS ACCURATE TO THE BEST OF MY KNOWLEDGE.

NAME DATE

SCALE: AS SHOWN

BAR IS ONE INCH ON ORIGINAL DRAWING

IF NOT ONE INCH ON THIS SHEET, ADJUST SCALES ACCORDINGLY

CONSTRUCTION RECORD

FIELD BOOK

STAKING

FOREMAN

AS-BUILT

INSPECTOR

STATE OF ALASKA 49TH REGISTERED PROFESSIONAL ENGINEER

Lloyd A. Pearson NO. CE 9692

2009 WATER SYSTEM UPGRADES

EQUIPMENT LIST

ATKA, ALASKA

CE2 ENGINEERS, INC.

PO BOX 232948 ANCHORAGE, AK 99523 PH: 907-349-1010 FAX: 907-349-1015

REVISION	BY	DATE

Project No.

Date MAY 2010

Designed LAP

Drawn

Approved LAP

Sheet No. M5.3

G:\ACAD\ATKA\2009 Water System Upgrades\M5.1_2_3 Equip Sht REV 2.dwg, 5/3/2011 2:17:27 PM, Flash, LANIER MP C2050_LD520C PCL 6.pc3

ELECTRICAL LEGEND

(NOTE: THIS IS A STANDARD LEGEND AND NOT ALL SYMBOLS ARE NECESSARILY USED.)

- EXTERIOR LIGHT FIXTURE, POLE MOUNTED, HEADS AS SHOWN
- HAND HOLE
- ELECTRIC VAULT
- PHOTOCELL CONTROL
- LUMINAIRE – TYPE AS NOTED ON PLAN
- LUMINAIRE – WALL MOUNTED: TYPE AS NOTED ON PLAN
- LUMINAIRE – EMERGENCY LIGHT
- TRACK LIGHTING – TRACK LENGTH AS SCALED: TYPE AS NOTED ON PLAN
- EMERGENCY LIGHTING UNIT (WALL; CEILING; REMOTE HEAD): TYPE "E", UON
- EMERGENCY BATTERY TO POWER REMOTE HEAD(S); TYPE "ERB", UON
- EXIT SIGN (CEILING; WALL); SHADE DENOTES FACE; ARROWS AS INDICATED; TYPE "X", UON
- $ SWITCH – SINGLE POLE, SINGLE THROW, UON
- $3 SWITCH – THREE WAY
- $4 SWITCH – FOUR WAY
- $a SWITCH CONTROL FOR FIXTURES DENOTED WITH "a" APPENDED TO CIRCUIT NUMBER
- $L SWITCH – LOW VOLTAGE
- $D SWITCH – ELECTRONIC DIMMER SWITCH COMPATIBLE WITH LIGHT FIXTURE
- $K SWITCH – KEYED
- $P SWITCH – PILOT LIGHT
- $T SWITCH – INTEGRAL MOTOR OVERLOAD
- $V SWITCH – VARIABLE SPEED CONTROL
- $OC LIGHT CONTROL OCCUPANCY SENSOR – WALL SWITCH BOX MOUNTED
- LIGHT CONTROL OCCUPANCY SENSOR – CEILING MOUNTED
- POWER DISTRIBUTION PANELBOARD
- METERING DEVICE
- CT CURRENT TRANSFORMER ENCLOSURE
- POWER PANELBOARD ([NEW – SURFACE; RECESSED], [EXISTING – SURFACE; RECESSED])
- T TRANSFORMER: APPROX. PHYSICAL SIZE AS SCALED; ACTUAL RATING AS NOTED ON ONE-LINE DIAGRAMS
- MOTOR CONNECTION
- COMBINATION BATHROOM FAN/LIGHT: TYPE AS NOTED ON PLAN
- NON-FUSED SAFETY SWITCH
- FUSED SAFETY SWITCH
- ENCLOSED CIRCUIT BREAKER SWITCH
- MOTOR STARTER
- COMBINATION MOTOR STARTER SAFETY SWITCH
- PUSH BUTTON CONTROL STATION
- JUNCTION BOX OR EQUIPMENT CONNECTION – FLEX OR RECEPTACLE AS REQUIRED (CEILING; WALL; FLOOR)
- FSD POWER CONNECTION TO FSD CONTROLLED BY FIRE ALARM SYSTEM
- SIMPLEX RECEPTACLE
- DUPLEX RECEPTACLE
- DOUBLE DUPLEX RECEPTACLE
- DUPLEX RECEPTACLE – SPLIT WIRED FOR SWITCH CONTROL OF LOWER OUTLET
- G DUPLEX RECEPTACLE – GFCI PROTECTED
- DUPLEX RECEPTACLE – GFCI PROTECTED MOUNTED +48" AFF
- DUPLEX RECEPTACLE – GFCI PROTECTED MOUNTED ABOVE COUNTERTOP
- DUPLEX RECEPTACLE – MOUNTED ABOVE COUNTERTOP
- DUPLEX RECEPTACLE – FLOOR MOUNTED FIRE RATED POKE THROUGH, UON
- DOUBLE DUPLEX RECEPTACLE – FLOOR MOUNTED FIRE RATED POKE THROUGH, UON
- RECEPTACLE – PENDANT MOUNTED FROM CEILING
- RECEPTACLE – FLUSH MOUNTED IN CEILING
- D DRYER RECEPTACLE – 30A, 3 POLE, 4 WIRE NEMA 14-30R
- ELECTRIC RANGE RECEPTACLE – 50A, 3 POLE, 4 WIRE, NEMA 14-50R
- SPECIAL PURPOSE RECEPTACLE – NEMA CONFIGURATION AS NOTED (SURFACE; WALL)
- GROUND CONNECTION POINT
- DUAL CHANNEL SURFACE MOUNTED RACEWAY – LENGTH AS SCALED
- SINGLE CHANNEL SURFACE MOUNTED RACEWAY – LENGTH AS SCALED
- TELECOMMUNICATION OUTLET (WALL; FLOOR)
- TELEPHONE OUTLET
- TV TELEVISION OUTLET (WALL; CEILING)
- DUAL CHANNEL SERVICE POLE
- TELECOMMUNICATION FLOOR STANDING RACK
- TELECOMMUNICATION WALL MOUNTED RACK
- TMGB TELECOMMUNICATION MAIN GROUNDING BUS
- TGB TELECOMMUNICATION GROUNDING BUS
- CONTROL PANEL – TYPE AS NOTED (SURFACE; RECESSED)
- FIRE ALARM CONTROLLED MAGNETIC DOOR HOLDER / RELEASE
- ABORT STATION
- CARBON MONOXIDE DETECTOR
- HEAT DETECTOR – RATE OF RISE
- 135° HEAT DETECTOR – FIXED TEMPERATURE AS NOTED
- SMOKE DETECTOR – PHOTOELECTRIC TYPE
- M SMOKE DETECTOR – MULTI-SENSOR TECHNOLOGY TYPE
- SMOKE DETECTOR – DUCT MOUNTED
- BR SMOKE DETECTOR – BEAM RECEIVER
- BT SMOKE DETECTOR – BEAM TRANSMITTER
- FLAME DETECTOR
- LINE TYPE HEAT SENSITIVE CABLE DETECTOR
- FIRE ALARM HORN
- FIRE ALARM STROBE
- FIRE ALARM COMBINATION HORN/STROBE
- P FIRE ALARM PULL STATION
- FCP FIRE ALARM CONTROL PANEL
- FSA FIRE SYSTEM ANNUNCIATOR PANEL
- HCP HALON CONTROL PANEL
- FIRE ALARM SPEAKER STROBE
- WATER FLOW BELL – 120V CONTROLLED BY FLOW SWITCH
- FIRE ALARM FLOW SWITCH
- FIRE ALARM TAMPER SWITCH
- MICROPHONE INPUT JACK
- MICROPHONE INPUT JACK – FLOOR MOUNTED
- INTERCOM CALL BUTTON
- INTERCOM ADMINISTRATION PHONE
- S SPEAKER (WALL; CEILING)
- SC CLOCK SPEAKER COMBINATION WALL MOUNT UNIT
- CLOCK – WALL MOUNTED
- CR SECURITY ACCESS CARD READER
- DS DOOR CONTROL SOLENOID
- DM DOOR MAGNETIC CONTACT
- GB SECURITY SYSTEM – GLASS BREAK SENSOR
- SECURITY SYSTEM – MOTION SENSOR
- PS SECURITY SYSTEM – DOOR POSITION SENSOR
- MD SECURITY SYSTEM – REQUEST TO EXIT MOTION DETECTOR
- KP SECURITY SYSTEM – ACCESS KEY PAD
- SECURITY SYSTEM – MOTION SENSOR – NARROW PATTERN
- SC SECURITY SYSTEM – CAMERA
- ACCESS PANEL
- LINETYPE DENOTING CABLE TRAY
- LINETYPE/LINEWEIGHT DENOTING FUTURE WORK
- LINETYPE/LINEWEIGHT DENOTING EXISTING WORK TO REMAIN
- LINETYPE/LINEWEIGHT DENOTING NEW WORK
- LINETYPE/LINEWEIGHT DENOTING DEMO WORK
- X DENOTES AVAILABLE FAULT CURRENT

EQUIPMENT TAG LEGEND

LUMINAIRES (A3[6] / 2H-15a)
- LUMINAIRE TYPE (UNDERLINED)
- THE NUMBER IN BRACKETS INDICATES HOW MANY TYPICAL LUMINAIRES OF THIS TYPE ARE IN THIS AREA
- CIRCUIT AND SWITCHLEG
- PANEL
- TYPICAL LUMINAIRE

CONTROL SWITCHES ($a/B)
- LOWER CASE LETTER DENOTES SWITCH LEG FOR CORRESPONDING LUMINAIRE CONTROL
- UPPERCASE LETTER OR NUMBER DENOTES SWITCH CONFIGURATION

EQUIPMENT CONNECTIONS (AHU-1 / A-1,3,5)
- EQUIPMENT ID (UNDERLINED) REFER TO EQUIPMENT CONNECTION SCHEDULE FOR REQUIREMENTS
- TYPICAL EQUIPMENT (MOTOR STARTER SHOWN)
- CIRCUIT NUMBER(S)
- PANEL

RECEPTACLES (+48" / 2L-1,3 / L5-20R)
- MOUNTING HEIGHT AFF
- PANEL
- CIRCUIT NUMBER(S)
- NEMA CONFIGURATION FOR SPECIAL RECEPTACLES (UNDERLINED)

ABBREVIATIONS

(E)	EXISTING
A	AMPERES
AC	ABOVE COUNTER
AFF	ABOVE FINISHED FLOOR
AFCI	ARC FAULT CIRCUIT INTERRUPTER
AFG	ABOVE FINISHED GRADE
AHJ	AUTHORITY HAVING JURISDICTION
AIC	AMPS INTERRUPTING CAPACITY
C	CONDUIT OR CELCIUS
CAT	CATEGORY
CB	CIRCUIT BREAKER
CO	CONDUIT ONLY
CT	CURRENT TRANSFORMER
(D)	DEMOLISH
DISC	DISCONNECT
EGC	EQUIPMENT GROUNDING CONDUCTOR
F	FAHRENHEIT
FAA	FIRE ALARM ANNUNCIATOR
FACP	FIRE ALARM CONTROL PANEL
FHP	FRACTIONAL HORSEPOWER
FLA	FULL LOAD AMPS
FSD	FIRE SMOKE DAMPER
FT	FEET
FU	FUSE
G	GROUND FAULT CIRCUIT INTERRUPTER
GEC	GROUNDING ELECTRODE CONDUCTOR
HP	HORSEPOWER
ID	IDENTIFICATION
IN	INCHES
KVA	KILOVOLT-AMPERE
KW	KILOWATT
LRA	LOCKED ROTOR AMPS
LTG	LIGHTING
MCA	MINIMUM CIRCUIT AMPACITY
MDP	MAIN DISTRIBUTION PANEL
MDS	MAIN DISTRIBUTION SWITCHBOARD
MFS	MAXIMUM FUSE SIZE
(N)	NEW
NC	NORMALLY CLOSED
NO	NORMALLY OPEN
P	POLES
PC	PHOTO CELL
PH, ø	PHASE
PNL	PANEL
PRI	PRIMARY
REC	RECEPTACLE
(R)	RELOCATED
RIB	RELAY IN A BOX (MOTOR RATED)
SCCR	SHORT CIRCUIT CURRENT RATING
SE	SERVICE ENTRANCE RATED
SEC	SECONDARY
SSEBJ	SUPPLY SIDE EQUIPMENT BONDING JUMPER
SVC	SERVICE
TELECOM	TELECOMMUNICATION
TGB	TELECOMMUNICATION GROUNDING BUSBAR
TMGB	TELECOMMUNICATION MAIN GROUNDING BUSBAR
TYP	TYPICAL
UON	UNLESS OTHERWISE NOTED
V	VOLTS
VA	VOLT-AMPERES
VFD	VARIABLE FREQUENCY DRIVE
W	WATTS OR WIRE
WG	WIRE GUARD
WP	WEATHERPROOF (NEMA 4 RATED)
XFMR	TRANSFORMER

MOUNTING HEIGHT SCHEDULE

PANELBOARDS (TOP)	+70"
SPECIAL SYSTEM PANELS (TOP)	+66"
POWER METER BASE (CENTER LINE OF SOCKET)	+66"
CONTACTORS, MOTOR STARTERS, DISCONNECT SWITCHES (TOP)	+66"
RECEPTACLES IN OFFICE AREAS	+18"
RECEPTACLES IN NON-FINISHED AND MECHANICAL SPACES	+46"
ABOVE COUNTER DEVICES (DENOTED "AC" OR BY SYMBOL)	SEE NOTES
WALL MOUNTED SWITCHES	+46"
TELECOMMUNICATION OUTLETS	+18"
WALL MOUNTED TELEPHONE OUTLET (DENOTED "W")	+54"
CLOCK OUTLETS	+80" TO BOTTOM
HORNS/STROBES/HORN STROBES/DOORBELL RINGER	+80" TO BOTTOM
PULL STATIONS, PUSH BUTTONS, DOORBELL PUSHBUTTON	+46"

NOTES:
1) COORDINATE AND INSTALL ALL EQUIPMENT AND DEVICES WITH THE ARCHITECTURAL PLANS AND ANY SPECIFICALLY DENOTED REQUIREMENTS.
2) MOUNTED HEIGHTS SHALL PREVAIL UNLESS OTHERWISE NOTED OR FIELD CONDITIONS REQUIRE DEVIATION.
3) MOUNTING HEIGHTS ARE FROM FINISHED FLOOR TO THE CENTERLINE OF THE DEVICE UNLESS OTHERWISE NOTED.
4) COORDINATE MOUNTING HEIGHTS AND LOCATIONS OF OUTLETS DENOTED AS ABOVE COUNTER TO BE INSTALLED 6" ABOVE COUNTERS OR BACKSPLASHES, WHICHEVER IS HIGHER.

GENERAL REQUIREMENTS

1. ALL ELECTRICAL WORK SHALL BE INSTALLED IN ACCORDANCE WITH ALL REQUIREMENTS OF THE LATEST EDITION OF THE NATIONAL ELECTRIC CODE, STATE, MUNICIPAL, AND FEDERAL LAWS, AMENDMENTS AND/OR ORDINANCES GOVERNING THE PROJECT. IF IN ANY INSTANCE THE PLANS AND SPECIFICATIONS ARE IN DIRECT CONFLICT WITH SUCH CODES, LAWS, AND/OR ORDINANCES, THE CODE, LAWS, AND/OR ORDINANCES SHALL HAVE JURISDICTION AND THE WORK IN QUESTION SHALL BE INSTALLED ACCORDING TO THE CODES, LAWS, AND/OR ORDINANCES. ALL WORK SHALL BE PERFORMED UNDER THE SUPERVISION OF A CERTIFIED ELECTRICIAN.
2. THE CONTRACTOR SHALL OBTAIN ALL REQUIRED CONSTRUCTION PERMITS AND PAY ALL ASSOCIATED FEES.
3. MATERIALS AND EQUIPMENT SHALL BE COMMERCIAL GRADE AND ACCEPTABLE TO THE AUTHORITY HAVING JURISDICTION AS SUITABLE FOR THE USE INTENDED. ALL ELECTRICAL EQUIPMENT SHALL INCLUDE THE SEAL OF A NATIONALLY RECOGNIZED TESTING LABORATORY FOR THE PURPOSE FOR WHICH IT IS INSTALLED. WHENEVER POSSIBLE, SIMILAR ITEMS SHALL BE SUPPLIED BY THE SAME MANUFACTURER THROUGHOUT THE PROJECT.
4. COORDINATE AND PROVIDE THE EQUIPMENT WITH THE SHORT CIRCUIT CURRENT RATING (SCCR) FOR THE AVAILABLE FAULT CURRENT AT THE POINT OF THE SYSTEM WHERE INSTALLED. SERIES RATING OF EQUIPMENT IS ACCEPTABLE. PROVIDE ARC FAULT WARNING LABELS ON ALL PANELBOARDS, MCC UNITS AND SIMILAR EQUIPMENT PER NEC REQUIREMENTS.
5. THE FOLLOWING WIRING METHODS SHALL BE ACCEPTABLE FOR INSTALLATION OF ELECTRICAL CIRCUITS: TYPE MC CABLE, INTERMEDIATE METAL CONDUIT, RIGID METAL CONDUIT, RIGID NONMETALLIC CONDUIT (FOR UNDERGROUND USE ONLY), ELECTRICAL METALLIC TUBING, FLEXIBLE METALLIC TUBING, FLEXIBLE METAL CONDUIT, AND LIQUID TIGHT FLEXIBLE CONDUIT. ALL WIRING METHODS SHALL INCLUDE AN EQUIPMENT GROUNDING CONDUCTOR TO BE INSTALLED THEREIN AND SIZED FOR THE CIRCUITS SERVED.
6. ALL CONDUCTORS SHALL BE COPPER. ALL CONDUCTORS IN UNHEATED SPACES OF THE BUILDING OR LOCATED OUTSIDE OF THE BUILDING ARE REQUIRED TO HAVE TYPE XHHW 90 DEGREE C INSULATION. ALL CONDUCTORS LOCATED IN HEATED SPACES CAN BE XHHW OR THHN 90 DEGREE C INSULATION UNLESS NOTED OTHERWISE. CONDUCTOR AMPACITY SHALL BE BASED ON TABLE 310-16 OF THE NEC. USE 60-DEGREE C. RATING FOR CIRCUITS TERMINATING ON DEVICES RATED BELOW 100A. USE 75-DEGREE C RATING FOR CIRCUITS TERMINATING ON DEVICES AND IN ENCLOSURES RATED 100A AND OVER. DERATE CONDUCTORS PER NEC REQUIREMENTS.
7. CONCEAL ALL ELECTRICAL RACEWAYS, BOXES, CABLING, CONDUCTORS AND THE LIKE IN WALLS, BELOW FLOORS, SLABS OR ABOVE FINISHED CEILING SPACES. ELECTRICAL EQUIPMENT AND WIRING CAN BE EXPOSED IN MECHANICAL ROOMS, TELECOMMUNICATION ROOMS OR WHERE SPECIFICALLY NOTED.
8. DO NOT ROUTE RACEWAYS ON THE EXTERIOR SURFACE OF THE BUILDING OR THE ROOF UNLESS SPECIFICALLY NOTED OTHERWISE.
9. PROVIDE ALL WIRING AND EQUIPMENT IN WET AND EXTERIOR LOCATIONS USING EQUIPMENT AND WIRING METHODS RATED FOR WET ENVIRONMENTS.
10. ALL CABLING LOCATED IN CEILING SPACES THAT ARE PLENUMS SHALL BE PLENUM RATED.
11. PROVIDE ACCESS PANELS FOR ALL LOCATION NECESSARY TO ACCESS ELECTRICAL EQUIPMENT AND JUNCTION BOXES. ACCESS PANELS SHALL BE FIRE RATED EQUAL TO OR EXCEEDING THE ADJACENT WALL OR CEILING CONSTRUCTION AND PAINTED TO MATCH.
12. CONNECT ALL EMERGENCY LIGHTING UNITS AND MODULES TO THE LOCAL AREA LIGHTING CIRCUITS AHEAD OF ANY SWITCHES OR RELAYS. LOCATE REMOTE TEST SWITCHES AND INDICATOR LIGHTS AS NECESSARY FOR TEST SWITCHES ON EMERGENCY MODULES.
13. SEAL ALL PENETRATIONS. SEAL PENETRATIONS AT ALL FIRE WALLS WITH APPROVED FIRE STOPPING COMPOUND.
14. OUTLET BOXES LOCATED BACK TO BACK IN FIRE RATED WALLS SHALL BE SPACED A MINIMUM OF 2 FEET HORIZONTALLY OR PROVIDE AN APPROVED FIRE PROTECTIVE MATERIAL PLACED ON OR AROUND THEM LISTED FOR THE FIRE RATING OF THE WALL.
15. CONTRACTOR SHALL SUBMIT REQUEST FOR SUBSTITUTION IN WRITING TO THE ENGINEER.
16. PROVIDE SEISMIC SUPPORT AND DESIGN PER IBC REQUIREMENTS.
17. THE ELECTRICAL CONTRACTOR SHALL CONTACT EACH SERVING UTILITY CO. AND VERIFY EXACT SERVICE REQUIREMENTS FOR POWER, TELEPHONE AND CABLE TV. THE CONTRACTOR SHALL COORDINATE AND PROVIDE ALL REQUIREMENTS OF EACH SERVING UTILITY AND ALL EQUIPMENT SHALL CONFORM TO THE SERVING UTILITY STANDARDS AND REQUIREMENTS.

EIC ENGINEERS, INC
ELECTRICAL ENGINEERS
6927 OLD SEWARD HWY, SUITE 200
ANCHORAGE, AK 99518
T 907.349.9712
F 907.349.9713
www.eiceng.com
EIC JOB #E10-1288

RECORD DRAWING CERTIFICATE
THESE DRAWINGS REFLECT RECORDED INFORMATION OBTAINED DURING CONSTRUCTION. INFORMATION PROVIDED HEREIN IS ACCURATE TO THE BEST OF MY KNOWLEDGE.
NAME
DATE

SCALE:
BAR IS ONE INCH ON ORIGINAL DRAWING
IF NOT ONE INCH ON THIS SHEET, ADJUST SCALES ACCORDINGLY

CONSTRUCTION RECORD
FIELD BOOK
STAKING
FOREMAN
AS-BUILT
INSPECTOR

STATE OF ALASKA
49TH
ERIC D. COWING
No. EE-8711
01/18/11
REGISTERED PROFESSIONAL ENGINEER

2009 WATER SYSTEM UPGRADES
ELECTRICAL LEGEND AND SCHEDULES
ATKA, ALASKA

CE2 ENGINEERS, INC.
PO BOX 232946 ANCHORAGE, AK 99523 PH: 907-349-1010 FAX: 907-349-1015

REVISION | BY | DATE

Project No.
Date JAN 2011
Designed BLS
Drawn BLS
Approved EDC

Sheet No. E1.0

LUMINAIRE SCHEDULE

TYPE	DESCRIPTION	LAMPS	MOUNTING	MANUFACTURER/MODEL	NOTES
E1	EMERGENCY LIGHTING UNIT W/ NEMA 4X RATING	(2) 9W KRYPTON	WALL +7'0"	LITHONIA #ENDX618	
E2	EMERGENCY LIGHTING UNIT	(2) 5.4W KRYPTON	WALL +7'0"	LITHONIA #ELM2	
FB2	48" FLUORESCENT WALL BRACKET	(2) 32W T8	WALL ABOVE VANITY	LITHONIA #WF-2-32-MVOLT-GEB10RS	
FL2	48" FLUORESCENT WRAPAROUND	(2) 32W T8	CEILING SURFACE	LITHONIA #LB-2-32-MVOLT-GEB10RS	
FW2	48" ENCLOSED & GASKETED FLUORESCENT W/ WET LABEL	(2) 32W T8	CEILING SURFACE	LITHONIA #DMW-2-32-MVOLT-GEB10RS	
ZW1	WALL MOUNTED HID AREA LIGHT W/ CUTOFF OPTICS & INTEGRAL PHOTOCELL	(1) 50W MH	EXTERIOR WALL	LITHONIA #TWAC-50M-120-PE	

STANDARD NOTES

A) CATALOG NUMBERS ARE FOR GENERAL REFERENCE AND ARE NOT INCLUSIVE OF ALL OPTIONS OR REQUIREMENTS DENOTED ON PLANS AND SPECIFICATIONS.
B) REFER TO ARCHITECTURAL DRAWINGS FOR EXACT LOCATION AND PROVIDE MOUNTING HARDWARE/FLANGES ETC FOR ALL LUMINAIRES FOR CEILING TYPES SHOWN.
C) LUMINAIRES NOTED ON THE FLOOR PLANS AS 'NL' (NIGHTLIGHT) SHALL BE CONNECTED TO UNSWITCHED POWER CIRCUIT NOTED ON DRAWINGS.
D) ALL FLUORESCENT BALLASTS TO BE ELECTRONIC WITH LESS THAN OR EQUAL 10% TOTAL HARMONIC DISTORTION.
E) ALL FLUORESCENT LAMPS TO BE 3500K.

REFERENCED NOTES:

1) NONE

SHEET NOTES

(1) CONNECT TO TANK LIGHT, COORDINATE WITH MECHANICAL.
(2) EQUIPMENT CONTROLLED FROM CONTROL PANEL. SEE E3.2 FOR DETAIL.
(3) ALL INSTALLATIONS THIS AREA TO MEET NEMA 4 WET AREA CLASSIFICATION REQUIREMENTS.
(4) ALL INSTALLATIONS THIS AREA TO MEET NEMA 4X WET/CORROSIVE AREA CLASSIFICATION REQUIREMENTS. PROVIDE PVC CONDUIT.

MECHANICAL EQUIPMENT CONNECTION SCHEDULE

UNIT ID	LOCATION OR FUNCTION	LOAD RATINGS KVA	HP	FLA	MCA	MFS	V	PH	CONDUCTORS & CONDUIT	NOTES
AB-1	AIR BLOWER		7.5				208	3	(3)8 AWG, (1)10 AWG EGC, 3/4" C.	1
BP-1	BOOST PUMP		1.5				208	3	(3)12 AWG, (1)12 AWG EGC, 1/2" C.	
BW-1	BACK WASH PUMP		10				208	3	(3)8 AWG, (1)10 AWG EGC, 3/4" C.	1
CF-1	CEILING FAN		FHP				120	1	(2)12 AWG, (1)12 AWG EGC, 1/2" C.	3
CFP-1	COAGULANT FEED PUMP		1/2				120	1	(2)12 AWG, (1)12 AWG EGC, 1/2" C.	
CFP-2	COAGULANT FEED PUMP		FHP				120	1	(2)12 AWG, (1)12 AWG EGC, 1/2" C.	
CP-1	CIRCULATION PUMP		FHP				120	1	(2)12 AWG, (1)12 AWG EGC, 1/2" C.	
EF-1	EXHAUST FAN		FHP				120	1	(2)12 AWG, (1)12 AWG EGC, 1/2" C.	
EF-2	EXHAUST FAN		FHP				120	1	(2)12 AWG, (1)12 AWG EGC, 1/2" C.	
EF-3	EXHAUST FAN		FHP				120	1	(2)12 AWG, (1)12 AWG EGC, 1/2" C.	
OS-1	OIL STOVE		FHP				120	1	(2)12 AWG, (1)12 AWG EGC, 1/2" C.	
OS-2	OIL STOVE		FHP				120	1	(2)12 AWG, (1)12 AWG EGC, 1/2" C.	
PP-1	PRESSURE PUMP		3/4				208	1	(2)12 AWG, (1)12 AWG EGC, 1/2" C.	
RP-1	RADIANT PANEL HEATER	375W					120	1	(2)12 AWG, (1)12 AWG EGC, 1/2" C.	2
RP-2	RADIANT PANEL HEATER	375W					120	1	(2)12 AWG, (1)12 AWG EGC, 1/2" C.	2
TF-1	EXHAUST FAN		FHP				120	1	(2)12 AWG, (1)12 AWG EGC, 1/2" C.	2
WH-1	WATER HEATER	1.5					120	1	(2)12 AWG, (1)12 AWG EGC, 1/2" C.	

STANDARD NOTES

A) REFER TO FLOOR PLAN DRAWINGS FOR EQUIPMENT TYPE REQUIREMENTS, LOCATIONS AND QUANTITIES.
B) COORDINATE ALL CONNECTION REQUIREMENTS WITH MECHANICAL AND ACTUAL EQUIPMENT SUPPLIED PRIOR TO ROUGH-IN.

REFERENCED NOTES

1) PROVIDE VFD WITH BYPASS CONTACTOR. SEE MECHANICAL.
2) EQUIPMENT CONTROLLED BY LINE VOLTAGE THERMOSTAT. SEE MECHANICAL.
3) FAN CONTROLLED BY SPEED CONTROL WALL SWITCH. SEE MECHANICAL.

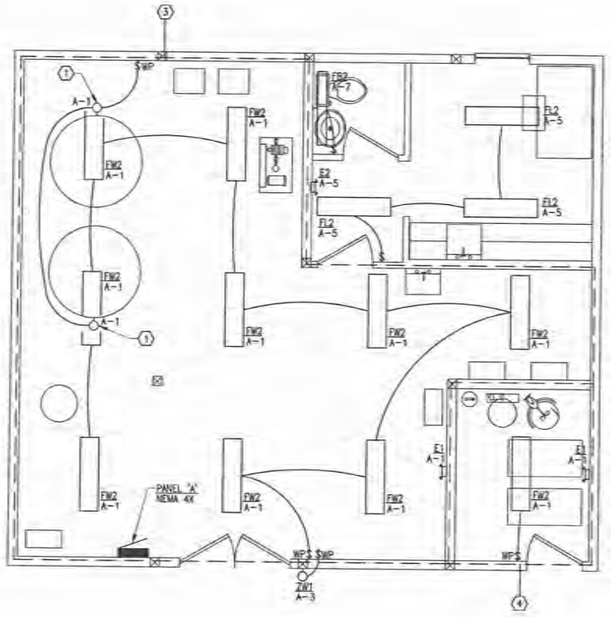

1 E2.0 **ELECTRICAL LIGHTING PLAN**
SCALE: 1/4" = 1'-0"

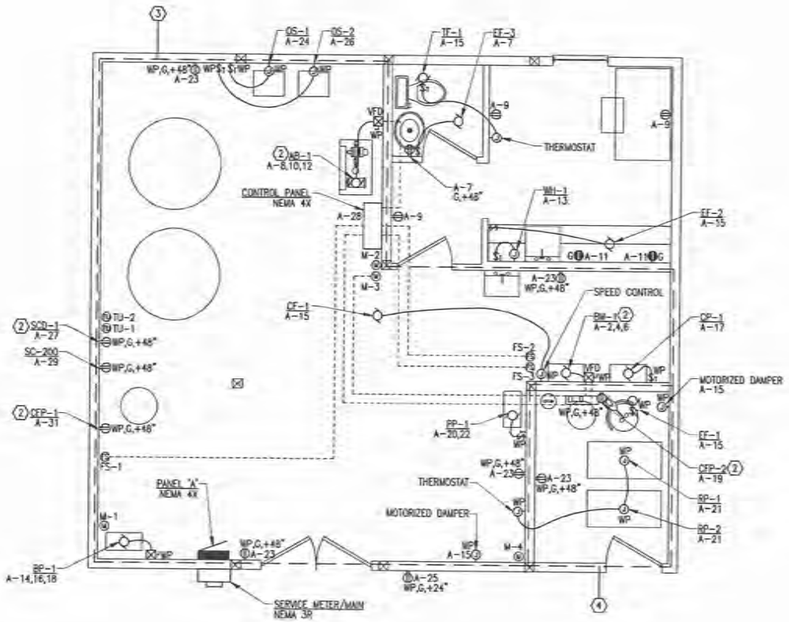

2 E2.0 **ELECTRICAL POWER PLAN**
SCALE: 1/4" = 1'-0"

EIC ENGINEERS, INC
ELECTRICAL ENGINEERS
6927 OLD SEWARD HWY, SUITE 200
ANCHORAGE, AK 99518
T 907.349.9712
F 907.349.9713
www.eiceng.com
EIC JOB #EE0-1288

RECORD DRAWING CERTIFICATE
THESE DRAWINGS REFLECT RECORDED INFORMATION OBTAINED DURING CONSTRUCTION. INFORMATION PROVIDED HEREIN IS ACCURATE TO THE BEST OF MY KNOWLEDGE.
NAME: DATE:

SCALE:
BAR IS ONE INCH ON ORIGINAL DRAWING
IF NOT ONE INCH ON THIS SHEET, ADJUST SCALES ACCORDINGLY

CONSTRUCTION RECORD
FIELD BOOK
STAKING
FOREMAN
AS-BUILT
INSPECTOR

REVISION | BY | DATE

2009 WATER SYSTEM UPGRADES
ELECTRICAL PLANS
ATKA, ALASKA

CE2 ENGINEERS, INC.
PO BOX 233948 ANCHORAGE, AK 99523 PH 907-345-1818 FAX 907-345-1815

Project No. ____ Date JAN 2011
Designed ____ BLS
Drawn ____ BLS
Approved ____ EDC

Sheet No.
E2.0

FEEDER SCHEDULE

FEEDER ID	RACEWAY QNTY	RACEWAY SIZE	CONDUCTORS	NOTES
200N	1	2"	(4)3/0 AWG, (1)6 AWG EGC	
SE	N/A	N/A	C.O. STUBBED OUT FOR UTILITY CONNECTION	1

STANDARD NOTES

A) ALL CONDUCTOR SIZES SHOWN ARE COPPER.

REFERENCED NOTES

1) COORDINATE CONDUIT SIZE, QUANTITY, LOCATION, ROUTING, AND REQUIREMENTS WITH UTILITY. SERVICE MAY BE OVERHEAD OR UNDERGROUND.

EQUIPMENT SCCR SCHEDULE

ALL EQUIPMENT TO HAVE SCCR EXCEEDING THE AVAILABLE SCA AT THE CALCULATED X/R RATIO. WHERE X/R RATIO IS GREATER THAN THE INDUSTRY STANDARD TEXT X/R RATIOS THE APPROPRIATE MULTIPLICATION FACTOR SHALL BE APPLIED TO PROPERLY RATE THE EQUIPMENT.

DOWNSTREAM EQUIPMENT AND CIRCUIT BREAKER RATINGS MAY BE SATISFIED BY USING FULLY RATED EQUIPMENT OR UL-LISTED SERIES RATED CIRCUIT BREAKERS RATED FOR THE AVAILABLE SCA AT EQUIPMENT. SERIES RATED EQUIPMENT MOTOR LOADS CANNOT EXCEED 1% OF AIC RATING PER NEC 240.86(C).

EQUIPMENT ID	SCAmps	X/R
SERVICE METER/MAIN	15,835	1.04
PANEL 'A'	15,087	1.02

ASSUMED UTILITY SYSTEM CONFIGURATION

TRANSFORMER

75 KVA; 1.1 %Z; 1.22 X/R

SCA(PRI.): INFINITE SCA(SEC.): 19,212

CONDUCTORS (TRANSFORMER SECONDARY)

PER PHASE

CU 1/C, 1 EA., #3/0, 20 FT., RACEWAY = NON-METAL

CONTRACTOR TO VERIFY ACTUAL EQUIPMENT TO BE PROVIDED WITH SERVING UTILITY PRIOR TO EQUIPMENT PROCUREMENT. ANY DECREASE OF TRANSFORMER %Z, CONDUCTOR LENGTHS, OR INCREASE IN TRANSFORMER KVA OR CABLE SIZES TO BE REPORTED TO CONTRACT OFFICER.

PANEL "A" SCHEDULE

VOLTAGE:208Y/120V, 3PH, 4W
BUS:225
MAIN LUGS ONLY - FED BY 200A CB

LOCATION: "WATER TREATMENT BUILDING"

MIN. A.I.C. RATING: SEE 1-LINE
ENCLOSURE: NEMA 4X
MOUNTING: SURFACE

LOAD DESCRIPTION	NOTE	KVA	LOAD	AMP	P	CKT	AWG	CKT	AMP	P	LOAD DESCRIPTION	NOTE	KVA	LOAD
LTG-INTERIOR PARK LIGHTS		1.04	L	20	1	1	-	2	60	3	BR-1		11.10	LM
LTG-EXTERIOR		0.07	L	20	1	3	-	4	-	-	-			-
LTG-OFFICE		0.23	L	20	1	5	-	6	-	-	-			-
LTG-W. REC.-TOILET-1		0.44	R	20	1	7	-	8	50	3	RB-1		8.72	M
REC.-OFFICE		0.54	R	20	1	9	-	10	-	-	-			-
REC.-OFFICE COUNTER		0.36	R	20	1	11	-	12	-	-	-			-
WH-1		1.50	C	20	1	13	-	14	15	3	BR-1		2.38	M
CC-1,EF-1,EF-2,TF-1,MOTORIZED DAMPERS		1.32	M	20	1	15	-	16	-	-	-			-
CP-1		0.83	M	20	1	17	-	18	-	-	-			-
CFP-2		0.83	M	20	1	19	-	20	20	3	PR-1		1.66	M
RP-1,RP-2		0.75	C	20	1	21	-	22	-	-	-			-
REC.-INTERIOR		0.90	R	20	1	23	-	24	20	1	DS-1		0.50	M
REC.-EXTERIOR		0.18	R	20	1	25	-	26	20	1	DS-2		0.50	M
SCD-1		1.18	R	20	1	27	-	28	20	1	CONTROL PANEL		0.50	C
SC-200		0.50	R	20	1	29	-	30	20	1	SPARE			S
CFP-1		1.98	R	20	1	31	-	32	20	1	SPARE			S
SPARE			S	20	1	33	-	34	20	1	SPARE			S
SPARE			S	20	1	35	-	36	20	1	SPARE			S
1 - SPACE -						37	-	38		1	- SPACE -			
1 - SPACE -						39	-	40		1	- SPACE -			
1 - SPACE -						41	-	42		1	- SPACE -			

SUMMARY BY LOAD TYPE	CONNECTED KVA PH A	PH B	PH C	FEED	TOTAL KVA	REC %	REC TOTAL	NOTES:
G GENERAL LOADS						N/A		
A APPLIANCE						0.75		
E ELECTRIC RANGE						1.00		
L LIGHTING	1.8	0.1	0.2		1.3	1.25	1.7	
R RECEPTACLES	1.4	0.5	1.3		3.2	100+SOME	3.2	
M MOTORS	5.9	5.8	5.0		16.7	1.00	16.7	
LM LARGEST MOTOR	3.7	3.7	3.7		11.1	1.25	13.9	
C CONTINUOUS	1.5	1.3			2.8	1.25	3.4	
N NON-CONTINUOUS	0.4	1.2	0.5		2.1	1.00	2.1	
S SPARE						1.00		
X NON-COINCIDENT						0.00		
K KITCHEN						1.00		
D DRYER						1.00		
O OTHER						1.00		
EXI EXIST'G TO REMAIN						1.25		
F FEEDER								
TOTAL KVA (PHASE)	13.9	12.6	10.7		37.2		41.0	
TOTAL AMPERES	115.8	104.8	89.3		103.3		113.8	
PHASE BALANCE, ABC	A-B	B-C	C-A					
PERCENT	10.0%	15.0%	25.7%					

DETAIL EQUIPMENT

(1) SERVICE METER/MAIN- SE RATED, NEMA 3R, 208Y/120V, 3#, 4W, 200A MAIN CB, 18,000 AIC. SQUARE D OR EQUIVALENT.

(2) PANEL 'A'- NEMA 4X, 208Y/120V, 3#, 4W, 200A, 18,000 AIC, 42 SPACE. SQUARE D OR EQUIVALENT.

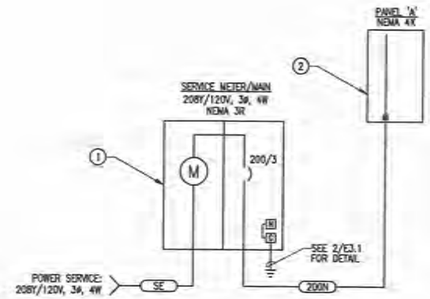

1 POWER ONE-LINE DIAGRAM

E3.1 SCALE: NONE

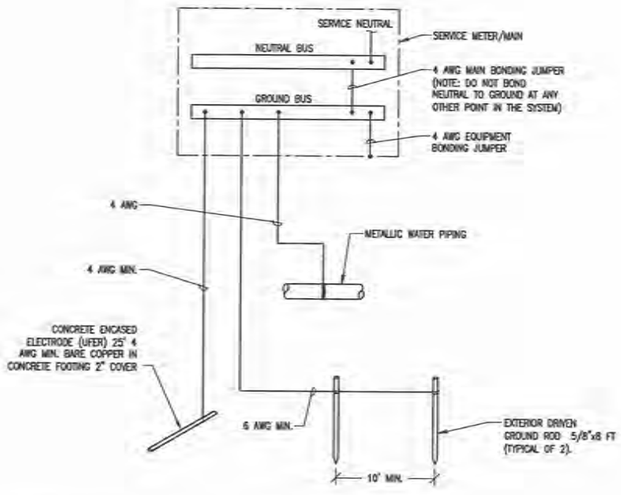

2 BUILDING GROUNDING DIAGRAM

E3.1 SCALE: NONE

EIC ENGINEERS, INC
ELECTRICAL ENGINEERS
6927 OLD SEWARD HWY, SUITE 200
ANCHORAGE, AK 99518
T 907.349.9712
F 907.349.9713
www.eiceng.com
EIC JOB # E10-1269

RECORD DRAWING CERTIFICATE
THESE DRAWINGS REFLECT RECORDED INFORMATION OBTAINED DURING CONSTRUCTION. INFORMATION PROVIDED HEREIN IS ACCURATE TO THE BEST OF MY KNOWLEDGE.
NAME
DATE

SCALE:
IF NOT ONE INCH ON THIS SHEET, ADJUST SCALES ACCORDINGLY

CONSTRUCTION RECORD
FIELD BOOK
STAKING
FOREMAN
AS-BUILT
INSPECTOR

STATE OF ALASKA
ERIC D. DOMOGALA
No. EC-9712
REGISTERED PROFESSIONAL ENGINEER

2009 WATER SYSTEM UPGRADES
ELECTRICAL
DIAGRAMS AND DETAILS
ATKA, ALASKA

CE2 ENGINEERS, INC.
PO BOX 232948 ANCHORAGE, AK 99523 PH: 907-345-1818 FAX: 907-345-1015

BY	DATE	REVISION

Project No. ____ Date ____ JAN 2011
Designed ____ BLS
Drawn ____ BLS
Approved ____ EDC

Sheet No.
E3.1

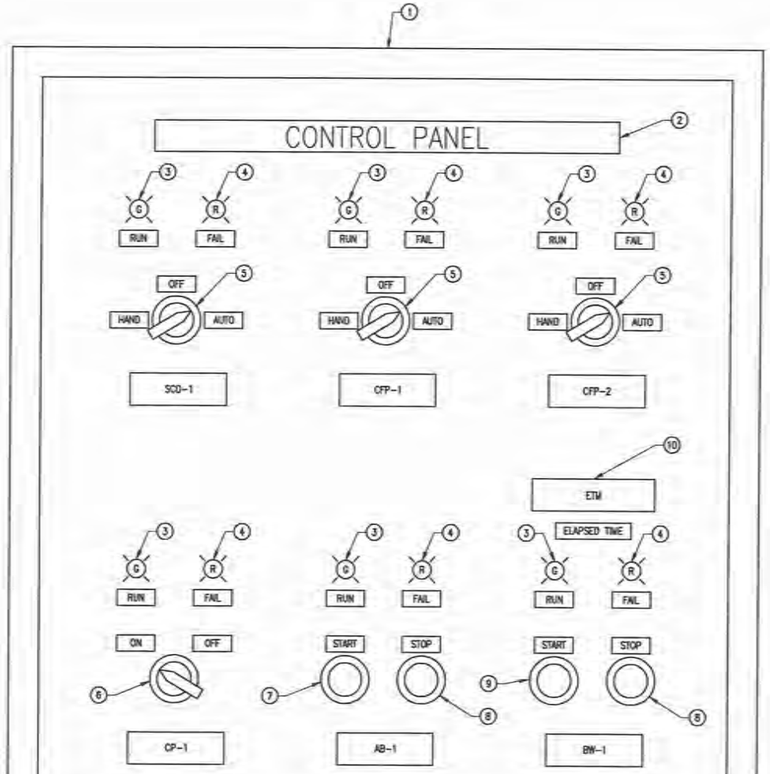

CONTROL PANEL COMPONENT SCHEDULE

ITEM	DESCRIPTION	NOTES
1	CONTROL PANEL ENCLOSURE– NEMA 4X, SIZED AS ADEQUATE TO HOUSE COMPONENTS	
2	NAME TAG– BLACK LAMINATED PLASTIC W/ WHITE CORE, SCREW MOUNTED, 1/4" (1/2" FOR FRONT DOOR ONLY) ENGRAVED LETTERS	
3	PILOT LIGHT– 30mm, GREEN, LED, 120VAC, PUSH TO TEST TYPE, ALLEN BRADLEY 800T–PTH16G	
4	PILOT LIGHT– 30mm, RED, LED, 120VAC, PUSH TO TEST TYPE, ALLEN BRADLEY 800T–PTH16R	
5	SELECTOR SWITCH– 30mm, 3–POSITION MAINTAINED W/ TERMINAL BLOCKS & CAM SHOWN, ALLEN BRADLEY 800 SERIES	
6	ON/OFF SWITCH– 30mm, 2–POSITION MAINTAINED W/ TERMINAL BLOCKS & CAM SHOWN, ALLEN BRADLEY 800 SERIES	
7	START PUSHBUTTON– 30mm, MOMENTARY SWITCH, 120VAC, GREEN, ALLEN BRADLEY 800 SERIES	
8	STOP PUSHBUTTON– 30mm, MOMENTARY SWITCH, 120VAC, RED, ALLEN BRADLEY 800 SERIES	
9	START PUSHBUTTON– 30mm, MOMENTARY SWITCH, 2–POLE, 120VAC, GREEN, ALLEN BRADLEY 800 SERIES	
10	ELAPSE TIME METER– HOUR METER, RESETTABLE, 99999.9 HOUR REGISTER, 120V	

STANDARD NOTES

A) CONTRACTOR TO PROVIDE PART NUMBERS SHOWN OR EQUIVALENT.

REFERENCED NOTES

1) NONE

1 E3.2 **CONTROL PANEL**
SCALE: NONE

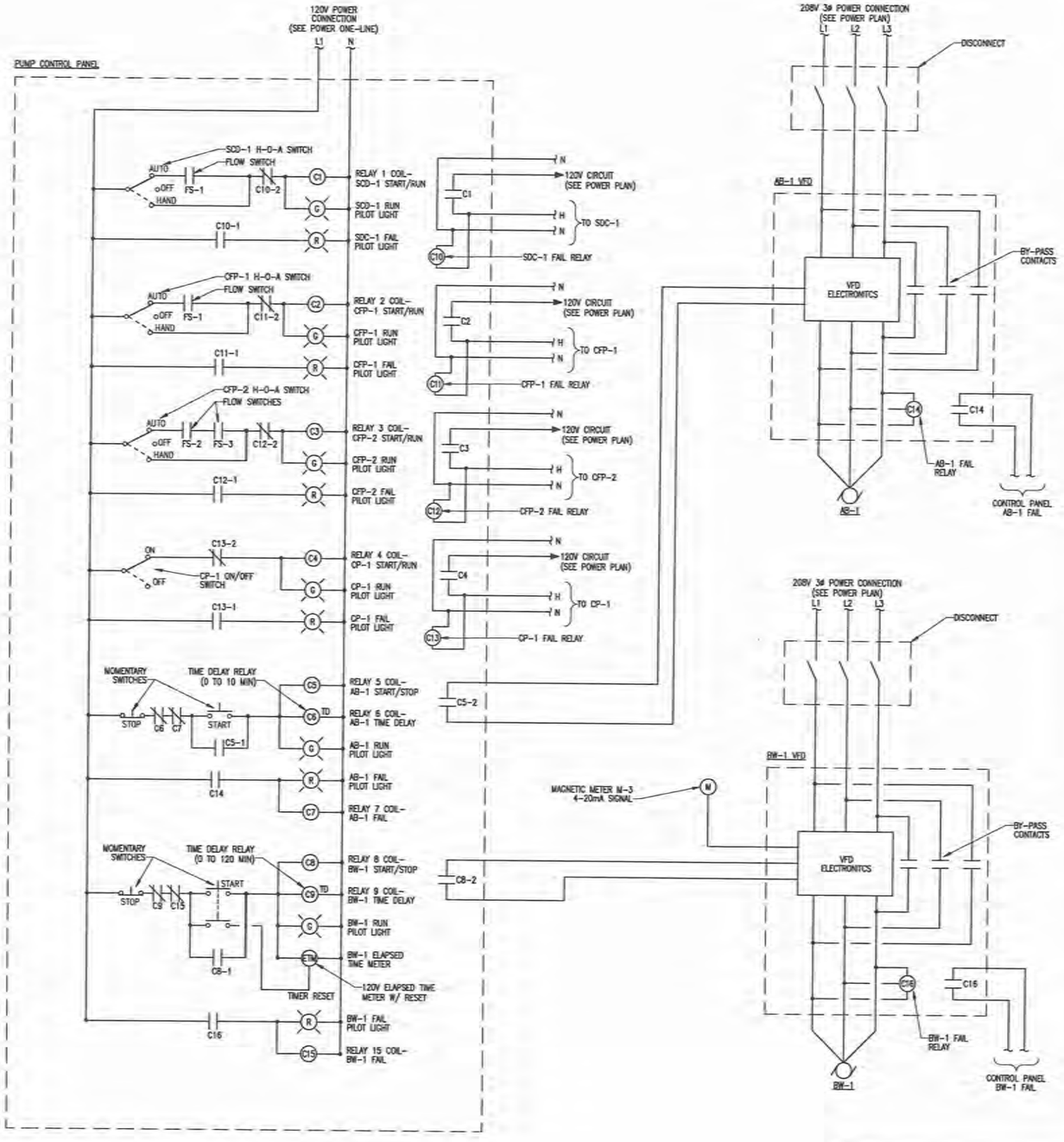

2 E3.2 **CONTROL PANEL DIAGRAM**
SCALE: NONE

RECORD DRAWING CERTIFICATE

THESE DRAWINGS REFLECT RECORDED INFORMATION OBTAINED DURING CONSTRUCTION. INFORMATION PROVIDED HEREIN IS ACCURATE TO THE BEST OF MY KNOWLEDGE.

NAME: DATE:

SCALE: BAR IS ONE INCH ON ORIGINAL DRAWING. IF NOT ONE INCH ON THIS SHEET ADJUST SCALES ACCORDINGLY

CONSTRUCTION RECORD
FIELD BOOK
STAKING
FOREMAN
AS-BUILT
INSPECTION

STATE OF ALASKA — REGISTERED PROFESSIONAL ENGINEER — No. 12167 — DAVID L. HAWKINS — DATE 6/MAY/11

2009 WATER SYSTEM UPGRADES

ELECTRICAL DIAGRAMS AND DETAILS

ATKA, ALASKA

CE2 ENGINEERS, INC.
PO BOX 223246 ANCHORAGE, AK 99523 PH 907-349-1510 FAX 907-349-1515

REVISION	BY	DATE

Project No. | Date JAN 2011 | Designed BLS | Drawn BLS | Approved EDC

EIC ENGINEERS, INC
ELECTRICAL ENGINEERS
6927 OLD SEWARD HWY, SUITE 200
ANCHORAGE, AK 99518
T 907.349.9712
F 907.349.9713
www.eicorg.com
EIC JOB # 810-1288

Sheet No. E3.2