ALASKA POLLUTANT DISCHARGE ELIMINATION SYSTEM

PERMIT FACT SHEET – PRELIMINARY DRAFT

Permit Number: AK0000507

Agrium Kenai Nitrogen Operations

ALASKA DEPARTMENT OF ENVIRONMENTAL CONSERVATION

Wastewater Discharge Authorization Program

555 Cordova Street

Anchorage, AK 99501

Public Comment Period Start Date: 10/31/2016
Public Comment Period Expiration Date: 12/2/2016
Alaska Online Public Notice System

Technical Contact: Mike Martz
Alaska Department of Environmental Conservation
Division of Water
Wastewater Discharge Authorization Program
555 Cordova Street
Anchorage, AK 99501
(907) 269-8198
Fax: (907) 269-3487
michael.martz@alaska.gov

Proposed issuance of an Alaska Pollutant Discharge Elimination System (APDES) permit to:

AGRIUM KENAI NITROGEN OPERATIONS

For wastewater discharges from

Agrium Kenai Nitrogen Operations
P.O. Box 575
Mile 21 Kenai Spur Hwy.
Kenai, AK, 99611

The Alaska Department of Environmental Conservation (the Department or DEC) proposes to issue/reissue an APDES individual permit (permit) to Agrium Kenai Operations. The permit authorizes and sets conditions on the discharge of pollutants from this facility to waters of the United States. In order to ensure protection of water quality and human health, the permit places limits on the types and amounts of pollutants that can be discharged from the facility and outlines best management practices to which the facility must adhere.

This fact sheet explains the nature of potential discharges from Agrium Kenai Facility and the development of the permit including:

- information on public comment, public hearing, and appeal procedures
- a listing of proposed effluent limitations and other conditions
- technical material supporting the conditions in the permit
- monitoring requirements in the permit

Public Comment

Persons wishing to comment on, or request a public hearing for the draft permit for this facility, may do so in writing by the expiration date of the public comment period.

Commenters are requested to submit a concise statement on the permit condition(s) and the relevant facts upon which the comments are based. Commenters are encouraged to cite specific permit requirements or conditions in their submittals.

A request for a public hearing must state the nature of the issues to be raised, as well as the requester's name, address, and telephone number. The Department will hold a public hearing whenever the Department finds, on the basis of requests, a significant degree of public interest in a draft permit. The Department may also hold a public hearing if a hearing might clarify one or more issues involved in a permit decision or for other good reason, in the Department's discretion. A public hearing will be held at the closest practicable location to the site of the operation. If the Department holds a public hearing, the Director will appoint a designee to preside at the hearing. The public may also submit written testimony in lieu of or in addition to providing oral testimony at the hearing. A hearing will be tape recorded. If there is sufficient public interest in a hearing, the comment period will be extended to allow time to public notice the hearing. Details about the time and location of the hearing will be provided in a separate notice.

All comments and requests for public hearings must be in writing and should be submitted to the Department at the technical contact address, fax, or email identified above (see also the public comments section of the attached public notice). Mailed comments and requests must be postmarked on or before the expiration date of the public comment period.

After the close of the public comment period and after a public hearing, if applicable, the Department will review the comments received on the draft permit. The Department will respond to the comments received in a Response to Comments document that will be made available to the public. If no substantive comments are received, the tentative conditions in the draft permit will become the proposed final permit.

The proposed final permit will be made publicly available for a five-day applicant review. The applicant may waive this review period. After the close of the proposed final permit review period, the Department will make a final decision regarding permit issuance. A final permit will become effective 30 days after the Department's decision, in accordance with the state's appeals process at 18 AAC 15.185.

The Department will transmit the final permit, fact sheet (amended as appropriate), and the Response to Comments to anyone who provided comments during the public comment period or who requested to be notified of the Department's final decision.

The Department has both an informal review process and a formal administrative appeal process for final APDES permit decisions. An informal review request must be delivered within 15 days after receiving the Department's decision to the Director of the Division of Water at the following address:

Director, Division of Water
Alaska Department of Environmental Conservation
410 Willoughby Street, Suite 303
Juneau, AK 99811-1800

Interested persons can review 18 AAC 15.185 for the procedures and substantive requirements regarding a request for an informal Department review.

See http://www.dec.state.ak.us/commish/InformalReviews.htm for information regarding informal reviews of Department decisions.

An adjudicatory hearing request must be delivered to the Commissioner of the Department within 30 days of the permit decision or a decision issued under the informal review process. An adjudicatory hearing will be conducted by an administrative law judge in the Office of Administrative Hearings within the Department of Administration. A written request for an adjudicatory hearing shall be delivered to the Commissioner at the following address:

Commissioner
Alaska Department of Environmental Conservation
410 Willoughby Street, Suite 303
Juneau AK, 99811-1800.

Interested persons can review 18 AAC 15.200 for the procedures and substantive requirements regarding a request for an adjudicatory hearing. See http://www.dec.state.ak.us/commish/ReviewGuidance.htm for information regarding appeals of Department decisions.

Documents are Available

The permit, fact sheet, application, and related documents can be obtained by visiting or contacting DEC between 8:00 a.m. and 4:30 p.m. Monday through Friday at the addresses below. The permit, fact sheet, application, and other information are located on the Department's Wastewater Discharge Authorization Program website: http://www.dec.state.ak.us/water/wwdp/index.htm .

Alaska Department of Environmental Conservation Division of Water Wastewater Discharge Authorization Program 555 Cordova Street Anchorage, AK 99501 (907) 269-6285	Alaska Department of Environmental Conservation Division of Water Wastewater Discharge Authorization Program 410 Willoughby Avenue, Suite 310 Juneau, AK 99801 (907) 465-5180
Alaska Department of Environmental Conservation Division of Water Wastewater Discharge Authorization Program 43335 Kalifornsky Beach Rd. - Suite 11 Soldotna, AK 99669 (907) 262-5210	

TABLE OF CONTENTS

1.0 APPLICANT 6
2.0 FACILITY INFORMATION 6
2.1 Permit Background 8
3.0 COMPLIANCE HISTORY 8
4.0 EFFLUENT LIMITS AND MONITORING REQUIREMENTS 8
4.1 Basis for Permit Effluent Limits 8
4.2 Basis for Effluent and Receiving Water Monitoring 8
4.3 Monitoring Requirements 9
4.4 Whole Effluent Toxicity Monitoring 11
4.5 Receiving Water Body Monitoring Requirements 12
5.0 RECEIVING WATER BODY 13
5.1 Description of Receiving Waterbody 13
5.2 Outfall Location 13
5.3 Water Quality Standards 13
5.4 Water Quality Status of Receiving Water 14
5.5 Mixing Zone Analysis 14
5.6 Mixing zone model verification study 18
6.0 ANTIBACKSLIDING 19
7.0 ANTIDEGRADATION 19
8.0 OTHER PERMIT CONDITIONS 23
8.1 Electronic Reporting (E-Reporting) Rule 23
8.2 Quality Assurance Project Plan 23
8.3 Operation and Maintenance Plan 23
8.4 Best Management Practices Plan and Total Residual Chlorine Treatability Study 23
8.5 Standard Conditions 24
9.0 OTHER LEGAL REQUIREMENTS 24
9.1 Ocean Discharge Criteria Evaluation 24
9.2 Endangered Species Act 25
9.3 Essential Fish Habitat 26
9.4 Permit Expiration 26
10.0 References 27
10.0 References (Continued) 28

TABLES

Table 1: Outfall 001: Effluent Limits and Monitoring Requirements 10
Table 2. Changes to effluent limits and monitoring requirements..... 11
Table 3. Ambient Monitoring Requirements. 13
Table 4. Effluent limitations and guidelines representing the degree of effluent reduction attainable by the application of BAT for the Ammonia and Urea Subcategories to 40 CFR § 418. 32
Table 5. Production rates and calculated TBELs for Agrium Kenai Nitrogen Operations 32
Table 6: Water Quality Criteria 34
Table 7. Selection of ammonia permit limits. 35
Table 8. Reasonable Potential Determination..... 39

FIGURES

Figure 1: Agrium Kenai Nitrogen Operations Map 29
Figure 2: Agrium Kenai Nitrogen Operations Process Flow Diagram..... 30

APPENDICES

APPENDIX A. FACILITY INFORMATION..... 29
APPENDIX B. BASIS FOR EFFLUENT LIMITATIONS 31
APPENDIX C. REASONABLE POTENTIAL DETERMINATION..... 36
APPENDIX D. EFFLUENT LIMIT CALCULATION 40
APPENDIX E. MIXING ZONE ANALYSIS CHECKLIST 44

1.0 APPLICANT

This fact sheet provides information on the preliminary draft APDES permit for the following entity:

Name of Facility:	Agrium Kenai Nitrogen Operations
APDES Permit Number:	AK0000507
Facility Location:	Mile 21 Kenai Spur Highway
Mailing Address:	P.O. Box 575
Facility Contact:	Mr. Steve Wendt

Figure 1 shows the location of the treatment plant and the discharge location.

2.0 FACILITY INFORMATION

The Agrium Kenai Nitrogen Operations (KNO) complex is a large nitrogen manufacturing fertilizer complex consisting of two ammonia plants, two urea plants, two associated utility plants, and a loading wharf (NAICS 325311). The KNO complex is located along the bluff above Cook Inlet at Mile 21 of the Kenai Spur Highway, near Nikiski and 10 miles north of Kenai. KNO is proposing to initially restart only the newer ammonia and urea plants, employing approximately 140 full-time workers. KNO will restart the second (older) portion of the complex at a later date, determined largely by the availability of natural gas. The full operation would employ 240 workers on a permanent, full-time basis. KNO is a large complex which occupies approximately 125 acres in an industrial area. Ammonia Plant #1, Urea Plant #2, and Utility Plant #3 were originally constructed in 1966 – 1968. KNO was expanded in 1977 – 1978 by the addition of Ammonia Plant #4, Urea Plant #5, and Utility Plant #6. Agrium will initially restart just the newer train (#4, #5, #6) and would restart the other train (#1, #2, #3) at a later date, as mentioned above, as determined largely by the availability of natural gas.

Ammonia Plants #1 and #4: To produce ammonia, natural gas and steam are reacted at high temperature in the primary and secondary reformers to produce hydrogen. Air is added as the nitrogen source, the mixture is purified to remove the byproduct (carbon dioxide), compressed to 3,500 pounds per square inch gage (psig) and heated to 900 degrees Fahrenheit (°F) to form gaseous ammonia. The anhydrous ("without water") ammonia is then liquefied by cooling to -28° F, and stored in one of two atmospheric storage tanks (30,000 and 50,000 tons, respectively). The average daily production estimate is 630,000 metric tons of ammonia (about half of which is used in the production of urea) and 620,000 metric tons of urea when the plant is started. When the plant is fully operational, production of ammonia and urea would be double the initial amounts.

Urea Plants #2 and #5: The anhydrous ammonia and carbon dioxide recovered from the ammonia process are mixed together at high pressure and temperature to form urea. Any water from the reaction is removed. In plant #2 the urea is crystallized, dried, and transported to the top of a tower where it is melted and then cooled (by spraying), to form a prill product. The prills are transported via an enclosed conveyor belt to a 50,000 ton bulk storage warehouse. Plant #5 produces urea in the same manner, concentrates by evaporation and sprays it in a molten state into large rotating cylindrical granulators to make a granular product. The granules are transported by an enclosed conveyor belt to an 80,000 ton bulk storage warehouse. The urea products are transported from the warehouses to the wharf (on covered conveyor belts), where the products are loaded on ships and barges for transport to west coast and overseas customers. The finished product is primarily used as a fertilizer. However, a small percentage may be combined with formaldehyde to produce resins and glues, or used as a protein nitrogen supplement in cattle feed. The average daily production of prilled and granulated urea is 3,089 tons/day.

Utility Plants #3 and #6: Utility Plants #3 and #6 define operational control centers that control cooling towers, water treatment systems and boilers. The utility plants generate electricity, steam, and dry compressed air for use in the ammonia and urea plants. Well water is demineralized for use as makeup for the natural gas fired steam boilers. Some well water is also used for cooling water in the plants. Electricity for plant use is produced by natural gas fired piston and turbine generators. The utility plants also control the waste water effluent

system. The domestic sewage and graywater generated at the plants are not covered by the proposed permit. The domestic wastewater is treated by a large onsite leachate septic system.

General Effluent (GE) Treatment System: The GE treatment system consists of lead and lag skim ponds, and a main pond. The system accepts approximately 300,000 gallons per day (gpd) of influent from the ammonia plants. The influent is generated from deionization (i.e., water treatment), boiler blowdown, plant laboratory, monitoring well purge water, process area drainage, and compressor building drainage. Additionally, air compressor and carbon dioxide (CO2) knockout pots drain to the GE system. The ammonia process condensate is stripped of carbon dioxide, compressed, and cooled in stages. Water collected from this process is discharged into the GE system. The influent is pH neutralized prior to entering the GE Lead Skim Pond (capacity 100,000 gallons) and drained through a submerged inverted draw-off and gate valve box into the GE Lag Skim Pond (capacity 100,000 gallons). The flow is drawn off into the GE Main Pond (capacity 1.3 million gallons) and finally to the Process Effluent Main Equalization Pond (see below), before being discharged to Cook Inlet. See Figure 2 for a diagram of the ammonia and urea treatment processes. All ponds are generalized into the GE effluent system box in Figure 2.

Process Effluent (PE) Treatment System: The PE treatment system accepts approximately 633,000 gpd of influent from the urea plants consisting of deionization backwash, boiler blowdown water, and cooling tower blowdown. Process condensate is recycled to the waste-heat boilers or recycled to the cooling towers before being discharged to the PE treatment system. Any waste through the floor drain is routed to an oil coalescer before going to the hydrolyzer stripper or desorber rectifier and being recycled back to the urea plants. The backwash and rinse water from the deionization system is routed to a neutralization tank (that uses soda ash) for pH control prior to entering the PE system. The influent is collected in a sump in the Utility Plant and pumped into the PE Lead Settling Pond (capacity 100,000 gallons). Once there, a draw-off system allows the water to run into the PE Lag Settling Pond (capacity 100,000 gallons) and finally into the PE Main Equalization Pond (capacity 1.4 million gallons). Any waste oil is skimmed from the ponds and burned. The PE Main Equalization Pond receives the GE Main Pond effluent prior to discharge (approximately 734,000 gallons/day). Discharge is to Cook Inlet via diffuser, at an approximate rate of 0.870 million gallons per day (mgd). The total retention time in the two treatment systems (GE and PE) is up to three days depending on the pumping rates. All six of the treatment ponds are lined in concrete. The rate of 0.870 mgd represents 3-year average flows from 2002 – 2004. Note that this value differs from 1.561 mgd used in the mixing zone analysis that represents a reasonable worst-case scenario maximum flow capacity that can be achieved by the discharge pumps.

Effluent Sludge: Approximately 3,650 to 7,150 cubic feet of effluent sludge accumulates each year in the bottom of the ponds. This sludge primarily consists of water hardness minerals removed in the deionization process. Each summer, the ponds are drained and the sludge is collected by vacuum trucks and transported to five drying beds. A perforated pipe collects the water that drains from the drying beds and is pumped to the effluent ponds for treatment. In the spring, the sludge thaws, is removed from the beds for disposal and shipped off site for additional treatment. The draft permit does not address the disposal or handling of sludge. Sludge disposal for this type of facility's sludge is addressed by the Resource Conservation and Recovery Act.

The wharf storm water is covered separately by Alaska Pollutant Discharge Elimination System (APDES) general permit authorization AKR05CC54.

In March 1974, EPA published the Development Document for Effluent Limitations Guidelines and New Source Performance Standards for the *Basic Fertilizer Chemicals Segment of the Fertilizer Manufacturing Point Source Category* that presented results of a study of the fertilizer industry. The facility is part of the Ammonia and Urea Subcategories and EPA identified the following primary parameters are required to be treated: ammonia nitrogen, organic, nitrogen, and pH, EPA recommended that the following secondary parameters be monitored: chemical oxygen demand, total dissolved solids, suspended, solids, oil and grease, total chromium, zinc, iron, and nickel. Based on the available monitoring data, the Department has identified the following parameters as pollutants of concern: ammonia, organic nitrogen, temperature, oil & grease, total residual chlorine, pH, arsenic, copper, manganese, nickel, zinc, total aromatic hydrocarbons, total aqueous hydrocarbons, and whole effluent toxicity.

2.1 Permit Background

The first National Pollutant Discharge Elimination System (NPDES) permit was issued in December 1974. At that time, the name of the facility was Collier Carbon and Chemical Corporation. In 1978, the name changed to Union Chemicals, a division of Union Oil Company of California. The permit expired in March 1981 and was reissued in March 1983. In February 1986, the name changed to Unocal Chemicals Division, Unocal Corporation. That permit expired in April 1988 and was reissued in July 1989. The company's name changed to Unocal Petroleum Products and Chemicals Division. The permit expired in July 1994. In 1999, the company again changed its name to Alaska Nitrogen Products LLC and the United States Environmental Protection Agency (EPA) administratively extended the permit until the current permit was reissued in November 2000. Agrium U.S., Inc. purchased the facility in May 2001 and changed the facility name to Agrium Kenai Nitrogen Operations. The active permit was transferred to KNO with the purchase. The current permit expired in November 2005 and an application was submitted that year. The permit has been administratively extended. In October 2009, authority to administer this permitting action transferred from EPA to DEC. The last urea loading occurred in December 2007, followed by the final ammonia shipment in April 2008, afterward the loading wharf was taken out of service. KNO may resume operations in 2019 depending on the availability of natural gas.

3.0 COMPLIANCE HISTORY

Discharge Monitoring Reports (DMRs) from 2003 to 2015 were reviewed to determine the facility's compliance with effluent limits. In June 2003 and March 2005, the discharge was below the minimum pH level of 6.0 standard units. However, the applicant indicated that these values were not below this pH level for longer than 60 minutes which was a provision in section I. A. 2. of the previous permit.

4.0 EFFLUENT LIMITS AND MONITORING REQUIREMENTS

4.1 Basis for Permit Effluent Limits

The Clean Water Act (CWA) requires that the limits for a particular pollutant be the more stringent of either technology-based effluent limits (TBELs) or water quality-based effluent limits (WQBELs). TBELs are set according to the level of treatment that is achievable using available technology. A WQBEL is designed to ensure that the Water Quality Standards (WQS) of a water body are met and may be more stringent than TBELs. Both TBELs (Code of Federal Regulations (CFR) 40 CFR § 418 adopted by reference in 18 AAC 83.010) and WQBELs are included in the permit. A detailed discussion of the basis for the effluent limits contained in AK0000507 is provided in APPENDIX D.

4.2 Basis for Effluent and Receiving Water Monitoring

In accordance with AS 46.03.110(d), the Department may specify in a permit the terms and conditions under which waste material may be disposed. Monitoring in a permit is required to determine compliance with effluent limits. Monitoring may also be required to gather effluent and receiving water data to determine if additional effluent limits are required and/or to monitor effluent impact on the receiving water body quality. The permittee is responsible for conducting the monitoring and for reporting results on DMRs or on the application for reissuance, as appropriate, to the Department. Fact Sheet sections 4.3 through 4.5 summarize monitoring requirements DEC has determined necessary to implement in the permit (additional discussion about the basis for monitoring requirements can be found in APPENDIX B through APPENDIX D).

4.3 Monitoring Requirements

The permit requires monitoring of the effluent for flow, ammonia, organic nitrogen, temperature, oil and grease, total residual chlorine (TRC), arsenic, copper, manganese, nickel, zinc, total aromatic hydrocarbons (TAH), total aqueous hydrocarbons (TAqH), whole effluent toxicity (WET), and production values for urea and ammonia to determine compliance with the effluent limitations and/or for use in future reasonable potential analyses (RPA).

Monitoring frequencies are based on the nature and effect of a pollutant, as well as a determination of the minimum sampling necessary to adequately monitor the facility's performance. Permittees have the option of taking more frequent samples than are required under the permit. These samples must be included in calculations and used for averaging if they are conducted using the Department-approved test methods (generally found in 18 AAC 70 and 40 CFR Part136 [adopted by reference in 18 AAC 83.010]) and if the method detection limits (MDL) are less than the effluent limits.

The reissued permit maintains monitoring requirements and effluent limits from the previous NPDES permit. TRC is a newly derived WQBEL based off information collected during the previous permit cycle (see APPENDIX D for details on this WQBEL). New monitoring requirements for arsenic, copper, manganese, nickel, and zinc are established for future RPAs (see APPENDIX B for details regarding the establishment of monitoring for these parameters).

Table 1 contains influent and effluent monitoring requirements.

Table 2 contains parameters that effluent limits or monitoring requirements have changed since the previous permit.

Table 1: Outfall 001: Effluent Limits and Monitoring Requirements

	Effluent Limits					Monitoring Requirements		
Parameter	**Daily Minimum**	**Monthly Average**	**Weekly Average**	**Daily Maximum**	**Units**	**Sample Location**	**Sample Frequency**	**Sample Type**
Total Discharge Flow	N/A	Report	N/A	N/A	MGD	Influent & Effluent	Continuous [a]	Recorded
Total Ammonia, as N	N/A	1,849	N/A	3,636	Pounds per day (lb/day) [b]	Effluent	1/Week	24-hour Composite [c]
Organic Nitrogen, as N	N/A	2,842	N/A	5,313	lb/day	Effluent	1/Week	24-hour Composite [c]
Temperature [d]	N/A	N/A	N/A	Report	˚ C	Effluent	Continuous [a]	Recorded
Oil and Grease [e]	N/A	N/A	N/A	15	Milligrams per liter (mg/L)	Effluent	1/Week	24-hour Composite [c]
Total Residual Chlorine [f]	N/A	1.43	N/A	4.75	mg/L	Effluent	Continuous [a]	Recorded [e]
	N/A	25.1	N/A	83.2	lb/day		1/Day	Calculated
pH	6.0	N/A	N/A	9.0	Standard units	Effluent	Continuous [a]	Recorded [e]
Arsenic, total recoverable	N/A	N/A	N/A	Report	Micrograms per liter (µg/L)	Effluent	2/Year	24-hour Composite [c]
Copper, total recoverable	N/A	N/A	N/A	Report	µg/L	Effluent	2/Year	24-hour Composite [c]
Manganese, total recoverable	N/A	N/A	N/A	Report	µg/L	Effluent	2/Year	24-hour Composite [c]
Nickel, total recoverable	N/A	N/A	N/A	Report	µg/L	Effluent	2/Year	24-hour Composite [c]
Zinc, total recoverable	N/A	N/A	N/A	Report	µg/L	Effluent	2/Year	24-hour Composite [c]
Total aromatic hydrocarbons	N/A	N/A	N/A	Report	µg/L	Effluent	1/Quarter	Grab
Total aqueous hydrocarbons	N/A	N/A	N/A	Report	µg/L	Effluent	1/Quarter	24-hour Composite [c]
WET	N/A	N/A	N/A	Report	Chronic toxic units (TUc)	Effluent	1/Quarter	24-hour Composite [c]
Production	N/A	N/A	N/A	N/A	Air dried tons per day	Effluent	1/Day [g]	N/A

Notes:

a. Continuous recording may be interrupted for infrequent shutdowns for maintenance, process changes, or similar activities.
b. lbs/day = concentration (mg/L) x flow (mgd) x 8.34 (conversion factor).
c. See Appendix C of the permit for a definition.
d. Temperature shall be reported as instantaneous maximum.
e. Method 1664 may be used.
f. Effluent limits for Total Residual Chlorine are not quantifiable using EPA-approved analytical methods. DEC will use the minimum detection limit of 0.1 mg/L as the compliance limit for this parameter.
g. The maximum daily production values for urea and ammonia for the previous year shall be submitted with the January Discharge Monitoring Report of the following year.

Table 2. Changes to effluent limits and monitoring requirements

Parameter	Units	Average Monthly Limit		Maximum Daily Limit		Sample Frequency	
		2000 Permit	2016 Permit	2000 Permit	2016 Permit	2000 Permit	2016 Permit
Total Chlorine Residual	mg/L	N/A	1.43	N/A	4.75	N/A	Continuous
Arsenic, total recoverable	µg/L	N/A	N/A	N/A	report	N/A	2/Year
Copper, total recoverable	µg/L	N/A	N/A	N/A	report	N/A	2/Year
Manganese, total recoverable	µg/L	N/A	N/A	N/A	report	N/A	2/Year
Nickel, total recoverable	µg/L	N/A	N/A	N/A	report	N/A	2/Year
Zinc, total recoverable	µg/L	N/A	N/A	N/A	report	N/A	2/Year

4.4 Whole Effluent Toxicity Monitoring

18 AAC 83.435 requires that a permit contain limitations on whole effluent toxicity (WET) when a discharge has reasonable potential to cause or contribute to an exceedance of a WQS. The discharge does not exhibit reasonable potential to exceed WQS at the boundary of the chronic mixing zone.

WET tests are laboratory tests that measure total toxic effect of an effluent on living organisms. WET tests use small vertebrate and invertebrate species and/or plants to measure the aggregate toxicity of an effluent. The two different durations of toxicity tests are: acute and chronic. Acute toxicity tests measure survival over a 96-hour exposure. Chronic toxicity tests measure reductions in survival, growth, and reproduction over a 7-day exposure. WET requirements have been modified for this permit issuance to simplify the WET requirements and provide consistency with other recently issued APDES permits and compliance with WQS. The sizing of a new acute mixing zone to prevent lethality to passing or floating organisms (during reasonable worst-case conditions) based on effluent information that was not available during the previous permit issuance is sufficient to comply with WQS (18 AAC 70.255(d), 2003 version). Therefore, DEC has removed requirements to calculate biocide concentrations at the boundary of the mixing zones and results from lethal concentration (LC50) endpoints of WET tests. DEC has reviewed KNO's WET data from 2002 through 2011 and the effluent did not show toxicity at the previous permit's critical concentration of 0.450%. The critical concentration for this permit issuance has been revised to 0.16% to reflect the WQS requirement of meeting 1.0 chronic toxic unit at the boundary of the chronic mixing zone (after accounting for dilution available in the authorized chronic mixing zone) (See 18 AAC 70.030).

The permittee must conduct chronic WET monitoring quarterly from Outfall 001 during the permit term. A WET monitoring frequency reduction or discontinuance may be requested by the permittee and granted by Department written approval if WET results from four consecutive quarters demonstrate that the effluent discharge does not exceed toxicity at the maximum dilution concentration of 2.5%. The permittee must conduct WET tests on effluent composite samples using one vertebrate and one invertebrate species as follows:

- Vertebrate (survival and growth): *Atherinops affinis* (Topsmelt). In the event that topsmelt is not available, *Menidia beryllina* (inland silverside) may be used as a substitute. The permittee shall document the substitute species in the DMR following the testing.

- Invertebrate: For larval development tests, the permittee must use the bivalve species *Crassotrea gigas* (Pacific oyster) or *Mytilis spp*. (mussel). Due to seasonal variability, testing may be performed during reliable spawning periods (e.g., December through February for mussels and June through August for oysters).

The presence of chronic toxicity must be estimated as specified in EPA *Short-Term Methods for Estimating the Chronic Toxicity of Effluents and Receiving Waters to Marine and Estuarine Organisms*, Third Edition (EPA-821-R-02-014). For the bivalve species, chronic toxicity must be estimated as specified in *Short-Term Methods for Estimating the Chronic Toxicity of Effluents and Receiving Water to West Coast Marine and Estuarine Organisms* (EPA/600/R-95/136).

CORMIX mixing zone analysis showed that expected dilution at the boundary of the chronic regulatory mixing zone would be 633:1. Dividing 1 by 633 produces the critical dilution. Therefore, the dilution series used for open water conditions shall be: 2.5%, 0.63%, 0.16%, 0.04%, and 0.01% effluent (based on a 0.25 dilution series factor), and a control, in order to bracket the expected dilution at the boundary of the chronic regulatory mixing zone, and to stay under the limit of percent brine that can be used in a marine toxicity test. A 0.25 dilution series factor was used rather than the standard 0.5 factor to inspect higher concentrations above the accelerated testing trigger.

In addition to those quality assurance measures specified in the methodology, the following quality assurance procedures must be followed:

- If organisms are not cultured by the testing laboratory, concurrent testing with reference toxicants must be conducted, unless the test organism supplier provides control chart data from at least the last 5 months of reference toxicity testing. Where organisms are cultured by the testing laboratory, monthly reference toxicant testing is sufficient.
- If either of the reference toxicant tests or the effluent tests does not meet all test acceptability criteria as specified in the test methods manual, then the permittee must re-sample and re-test as soon as possible.
- Control and dilution water should be receiving water or salinity adjusted laboratory water. If the dilution water is different from the culture water, a second control using culture water must also be used.

The species and test methods have been updated to maintain consistency with other recently issued marine APDES permits. The permit also requires accelerated WET testing if toxicity is greater than 625 TUc in any test. The permit requires two more biweekly WET tests be conducted over a four week period. If the permittee demonstrates through an evaluation of the facility operations that the cause of the exceedance is known and corrective actions have been implemented, only one accelerated test is required. If toxicity is greater than 625 TUc in any of the accelerated tests, the permittees must initiate a Toxicity Reduction Evaluation (TRE). A TRE is required so that the specific cause of the toxicity can be identified and mitigated (see section 1.3.6 of the permit for further details). If a TRE is initiated, a toxicity identification evaluation (TIE) may be initiated and must be performed in accordance with EPA guidance manuals, similar to other recently issued APDES permits that require WET testing and discharge to marine waters.

4.5 Receiving Water Body Monitoring Requirements

Receiving water monitoring was established in the previous permit to monitor for total ammonia, pH, temperature, and salinity. Samples were taken from five stations: three at the boundary of the chronic ammonia mixing zone, one inside the mixing zone, and a background site. The ambient monitoring was discontinued after four quarters. DEC has reduced the number of sampling locations to two, but has retained sampling for the same parameters on a quarterly basis (for four quarters) and has added TRC as a pollutant of concern. DEC is maintaining the receiving water body monitoring to gather a more robust

and statistically meaningful ambient data set for temperature, pH, and salinity which will be used in future mixing zone decisions. Data for ammonia and TRC will be used to evaluate the presence and level of these parameters outside of the calculated mixing zone and should be included in an annual report. Data collected from the ambient mixing study per Permit Section 1.5.11 may be used to fulfill these ambient monitoring requirements. The monitoring requirements are listed in Table 3. As part of the ambient monitoring requirements in the permit, DEC is requiring that an ambient mixing study be completed within one year of full KNO discharge operations. KNO must provide a study-plan to the Department for approval and be implemented within six-months of the approval. Further details about the mixing study are located in Fact Sheet section 5.6. Results of the study should be submitted annually along with annual reporting requirements of Permit Section 1.5.10 and 2.2.6.

Table 3. Ambient Monitoring Requirements.

Parameter	Units	Background Sampling Frequency	Boundary of Mixing Zone Sampling Frequency	Sample Type
Total Ammonia as N	mg/L	1/Quarter	1/Quarter	Grab
TRC	µg/L	1/Quarter	1/Quarter	Grab
Temperature	°C	1/Quarter	N/A	Measurement
pH	Standard Units	1/Quarter	1/Quarter	Grab
Salinity	grams/kilogram	1/Quarter	N/A	Grab

5.0 RECEIVING WATER BODY

5.1 Description of Receiving Waterbody

Cook Inlet is a 217 mile (350 kilometer) long, narrow, and semi-enclosed waterbody that has a free connection to the open ocean with a general northeast-southwest orientation. It is divided naturally into the upper and lower regions by the East and West Forelands, where Cook Inlet is approximately 10 miles (16 kilometers) wide. The East and West Forelands constrict water flow and influence the movement of water. Cook Inlet, and its channels, coves, flats, and marshes, are a mixture of terrestrial sources from numerous river drainages and marine waters of Shelikof Strait and the Gulf of Alaska. Tidal components are responsible for mixing freshwater inputs from rivers within Cook Inlet and from the Alaska Coastal Current entering Cook Inlet at Kennedy Entrance. Cook Inlet varies in width from about 62 miles (100 kilometers) near the entrance to less than 12 miles (20 kilometers) at its head. It has shoals towards its head where it separates into two narrow shallow arms (Knik and Turnagain) (DEC 2014).

5.2 Outfall Location

KNO discharges treated effluent into marine waters of Cook Inlet at latitude 60.67151211 North by 151.39174974 West. The outfall is comprised of a six port, 0.5 meter long diffuser oriented vertically in the water column on the KNO wharf dock.

5.3 Water Quality Standards

Regulations in 18 AAC 70 require that the conditions in permits ensure compliance with the WQS. The state's WQS are composed of use classifications, numeric and/or narrative water quality criteria, and an antidegradation policy. The use classification system designates the beneficial uses that each water body is expected to achieve. The numeric and/or narrative water quality criteria are the criteria deemed necessary by the state to support the beneficial use classification of each water body. The antidegradation policy ensures that the beneficial uses and existing water quality are maintained.

Water bodies in Alaska are designated for all uses unless the water has been reclassified under 18 AAC 70.230 as listed under 18 AAC 70.230(e). Some water bodies in Alaska can also have site–specific water quality criterion per 18 AAC 70.235, such as those listed under18 AAC 70.236(b). Cook Inlet, near the KNO outfall, has not been reclassified pursuant to 18 AAC 70.230, nor does it have site-specific water quality criteria pursuant to 18 AAC 70.235. Therefore, existing uses and designated uses are the same and Cook Inlet, near the KNO outfall, must be protected for all marine designated use classes listed in 18 AAC 70.020(a)(2). These marine designated uses consist of the following: water supply for aquaculture, seafood processing and industry; contact and secondary recreation; growth and propagation of fish, shellfish, other aquatic life, and wildlife; and harvesting for consumption of raw mollusks or other raw aquatic life.

5.4 Water Quality Status of Receiving Water

Any part of a water body for which the water quality does not or is not expected to meet applicable WQS is defined as a "water quality limited segment" and placed on the state's impaired water body list. For an impaired waterbody, Section 303(d) of the Clean Water Act (CWA) requires states to develop a Total Maximum Daily Load (TMDL) management plan for a water body determined to be water quality limited. The TMDL documents the amount of a pollutant a water body can assimilate without violating a state's WQS and allocates that load to known point sources and nonpoint sources.

Cook Inlet is not included on the *Alaska's Final 2010 Integrated Water Quality Monitoring and Assessment Report*, July 15, 2010, as an impaired waterbody, nor is the waterbody listed as a CWA 303(d) waterbody requiring a TMDL.

5.5 Mixing Zone Analysis

In 2003, DEC authorized mixing zones for KNO in a CWA Section 401 certification. Five mixing zones were authorized: a chronic mixing zone for ammonia with a dilution factor of 721 was defined as a vertical cylinder of 221 meter radius (153,000 m^2 surface area), a chronic mixing zone for metals, chronic WET, and pH with a dilution factor of 224 defined as a vertical cylinder of 88 meter radius (24,328 m^2 surface area), an acute mixing zone for ammonia with a dilution factor of 77 was defined as a vertical cylinder of 35 meter radius (3,848 m^2 surface area), an acute mixing zone for metals with a dilution factor of 8.7 was defined as a vertical cylinder of 2.5 meter radius (20 m^2 surface area), and an acute mixing zone for biocide with a dilution factor of 680 was defined as a vertical cylinder of 210 meter radius (139,000 m^2 surface area). All mixing zones were authorized from the seabed to the sea surface. The permittee provided new data on TRC and submitted a revised mixing zone application that suggested the mixing zone for this permit issuance be revised. Furthermore, several of the parameters in the previous mixing zone authorization were clarified (metals) or removed (biocide) due to the lack of WQS criteria.

DEC consulted with MixZon Inc., the proprietors of the CORMIX mixing zone modeling software, regarding ambiguities of the model submitted by the applicant. A representative from MixZon indicated that "conventional CORMIX application was not intended for vertical diffuser orientations" (personal communication MixZon 2016). Due to this issue, there are some uncertainties and assumptions that were correspondingly developed to run CORMIX models to arrive mixing zone size and dilution. Therefore, DEC is requiring a mixing zone model verification study (mixing study) be completed during this permit issuance cycle. For details about the study, please see Fact Sheet section 5.6.

In accordance with state regulations at 18 AAC 70.240, as amended through June 23, 2003, the Department may authorize a mixing zone in a permit. A chronic mixing zone is sized to protect the ecology of the waterbody as a whole, while an acute mixing zone is sized to prevent lethality to passing organisms.

KNO has a four port diffuser oriented vertically in the water column. KNO submitted a Form 2M mixing zone application in August 2014 with several CORMIX mixing zone model checklists that

modeled four different cases: summer/winter cases using ammonia as the pollutant parameter that drove the sizes of the mixing zone, and summer/winter cases where the effluent plume was modeled as a thermal discharge. DEC conducted a RPA on the available effluent data and determined that TRC would require greater dilution to meet both acute and chronic criteria than ammonia. DEC requested that KNO revise their mixing zone application to account for TRC. After discussions with KNO, a revised mixing zone application was submitted January 2016 that accounted for TRC, with a requested acute mixing zone of 96 meters radius for chlorine and a chronic mixing zone of 486 meters radius for ammonia. Upon review of the submitted mixing zone application documents, including KNO's projected maximum expected effluent concentration (MEC) for TRC, DEC revised the size of the applicant proposed mixing zone to reflect the dilution required by the MEC calculated in DEC's RPA. The CORMIX model indicates that the water quality criteria would be met downstream of, and perpendicular to the direction of the ambient current (in both flooding and ebbing tidal directions). The mixing zone is sized to ensure: 1) the water quality criteria found in 18 AAC 70 are met at the boundary of the mixing zones, 2) the mixing zone is as small as practicable, and 3) compliance with all other applicable mixing zone regulations. The chronic mixing zone for the discharge has a dilution of 633:1 and is defined as a rectangle, extending from the seafloor to the sea surface, with a width of 24 meters (perpendicular to the shoreline) and a length of 822 meters (parallel to the shoreline), centered on the diffuser. The chronic mixing zone is authorized for: ammonia, TRC, pH, temperature, and WET. The mixing zone size was driven by the dilution required for TRC.

There is a smaller, initial, acute mixing zone for ammonia and TRC surrounding the outfall and contained within the larger chronic mixing zone. The acute mixing zone for the discharge has a dilution of 365:1 and is defined as a rectangle, extending from the seafloor to the sea surface, with a width of 0.06 meters and a length of 478 meters centered on the diffuser. Acute aquatic life criteria will be met and apply at and beyond the boundary of this smaller initial mixing zone surrounding the outfall.

APPENDIX E, Mixing Zone Analysis Checklist, outlines criteria that must be considered when the Department analyzes a permittee's request for a mixing zone. These criteria include the size of the mixing zone, treatment technology, existing uses of the water body, human consumption, spawning areas, human health, aquatic life, and endangered species. All criteria must be met in order to authorize a mixing zone. The following summarizes the Department's analysis:

5.5.1 Size

In accordance with 18 AAC 70.255, the Department determined that the size of the mixing zone for the KNO wastewater discharge is appropriate. The previous permit and CWA section 401 certification authorized chronic mixing zones as circles centered over the diffuser of 221 meter radius (authorized for ammonia) and 88 meter radius (authorized for mercury, zinc, copper, arsenic, pH, and WET). These mixing zones corresponded with a surface area of 153,439 m^2 and 24,328 m^2 and dilution factors of 721 and 224, respectively. DEC proposes to authorize one chronic mixing zone for this permit issuance with a total surface area of 19,728 m^2 (822 meters long by 24 meters wide) and a dilution factor of 633. Both the size and the dilution factor for the chronic mixing zone are reduced from the previous permit issuance. The previous NPDES permit and CWA section 401 certification also authorized acute mixing zones as circles centered over the diffuser of 35 meter radius (ammonia) and 2.5 meter radius (mercury, zinc, copper, and arsenic). These acute mixing zones corresponded with a surface area of 3,848 m^2 and 29 m^2 and dilution factors of 77 and 2.5, respectively. This permit issuance authorizes an acute mixing zone for ammonia and TRC as a rectangle with a surface area of 29 m^2 and a dilution factor of 365. Although the dilution factor for the acute mixing zone has increased, the area of the mixing zone has decreased. TRC is a parameter that was monitored for during the previous permit cycle and information to size a mixing zone for TRC was not available at the time the previous mixing zone was authorized. TRC data supplied by the applicant is new information that was not used in a previous permit decision. The CORMIX modeling discussed in preceding paragraphs was used to

determine the mixing zone size for this permit issuance. The 10th and 90th percentile ambient current velocities, 0.252 meters per second (m/s) and 2.280 m/s respectively, were obtained by DEC from a nearby NOAA buoy current station CO10801 located north of the Tesoro pier, in the immediate vicinity of the KNO outfall. These ambient current velocities determined the size of the chronic and acute mixing zone lengths and widths. Due to uncertainties related to modeling a vertically oriented diffuser in CORMIX, DEC is requiring that the mixing zone size be verified by a mixing study (see Fact Sheet Section 5.6). If the results of the study indicate that the size of the mixing zones can be further decreased, DEC will take this information into consideration with respect to future permitting actions.

5.5.2 Technology

In accordance with 18 AAC 70.240(a)(3), the most effective technological and economical methods were used to disperse, treat, remove, and reduce pollutants. TBELs have been calculated for ammonia (as N) and organic nitrogen (as N) in accordance with effluent limit guidelines (ELGs) found at 40 CFR § 418.23 Subpart B and 40 CFR § 418.33 Subpart C (as adopted by reference at 18 AAC 83.010) and in all cases average monthly limits and maximum daily limits for these parameters are less than the 2000 EPA-issued NPDES permit (See APPENDIX B). TRC does not have a requirement under the ELGs for this industrial category, however, a WQBEL has been developed and implemented in this permit issuance. Furthermore, DEC is requiring a "treatability study" be undertaken during this permit cycle to evaluate the feasibility of reducing TRC levels in the effluent (See Fact Sheet Section 8.4). There are no other treatment requirements of 18 AAC 70 nor 18 AAC 83 applicable to this type of discharge, therefore DEC has determined that the mixing zone requirements of 18 AAC 70.240(a)(3) have been met.

5.5.3 Existing Use

In accordance with 18 AAC 70.245, the mixing zone has been appropriately sized to fully protect the existing uses of the Cook Inlet. The existing uses were maintained and protected under the terms of the previous permit. The permit reissuance application does not propose any changes that would likely result in a lower quality effluent and TBELs, calculated in accordance with ELGs for this industry category, have become more stringent from the previous permit issuance. The sizes of the acute and chronic mixing zones for ammonia have also decreased from the previous permit issuance. Effluent monitoring results from the time when KNO was operational indicate that the discharge neither partially nor completely eliminates an existing use of the water body outside of the mixing zone boundary. The residence time of any floating organism traveling through the chronic mixing zone is expected to be relatively short, with a potential exposure to diluted effluent for up to 217 seconds (3.6 minutes) based on the CORMIX models. Exposure to acute concentrations of pollutants from the effluent in the mixing zone would be 157 seconds (2.6 minutes). Mixing zone modeling suggests that the flushing is adequate to ensure full protection of uses of the water body outside of the mixing zone (results of which will be confirmed or refuted by the mixing study – see Fact Sheet Section 5.6). Results of WET tests performed when the facility was last operational indicate that toxicity should not exist at levels that might result in biological impairment or cause an affect or damage to the ecosystem. DEC is also requiring a "treatability study" be completed to determine if further reduction of TRC is feasible (see Fact Sheet Section 8.4). DEC has determined that the existing uses and biological integrity of the water body will be maintained and fully protected under the terms of the permit as required by 18 AAC 70.245(a)(1-2), 18 AAC 70.250(a)(3), and 18 AAC 70.250(a)(4).

5.5.4 Human Consumption

Under the conditions of the permit, and in accordance with 18 AAC 70.250(b)(2) and (b)(3), the pollutants discharged cannot produce objectionable color, taste, or odor in aquatic resources harvested for human consumption; nor can the discharge preclude or limit established processing activities or commercial, sport, personal use, or subsistence fish and shellfish harvesting. Although there is a commercial shore lease fishery[1] in the immediate vicinity (shoreward) of the outfall, the mixing zone width for this permit issuance has been decreased such that the mixing zone should not have an impact on established fishery activities. The CORMIX modeling suggests that the maximum expected effluent concentrations of pollutants will be diluted relatively rapidly and the Department is requiring that the applicant verify these modeling results by a mixing study to provide further evidence that the mixing zone will not preclude or limit established fishery activities per 18 AAC 70.250(b)(3). DEC has determined that application data and available mixing zone modeling suggests that pollutants discharged will neither produce objectionable color, taste, or odor in harvested aquatic resources for human consumption, nor preclude or limit fish and shellfish harvesting per 18 AAC 70.250(b)(2-3).

5.5.5 Spawning Areas

In accordance with 18 AAC 70.255(h), the mixing zones are not authorized in a spawning area for anadromous fish for chinook, coho, pink, chum, and sockeye salmon. The Alaska Department of Fish and Game (ADF&G) anadromous waters interactive catalog[2] indicates that there are no known spawning areas for any of the species listed above in the vicinity of the KNO outfall discharge to Cook Inlet. Although 18 AAC 70.255(h) applies to streams, rivers, or other flowing fresh waters, the Department reviewed the anadromous waters catalog. Discharges to fresh waters are not authorized under the permit.

5.5.6 Human Health

The KNO effluent contains small amounts of arsenic, copper, nickel, and zinc, which are identified as bioaccumulative by EPA (EPA 2000). However, there are insufficient samples of these parameters (five for arsenic during the previous permit issuance and three for the remaining metals) to determine whether the discharge exhibits reasonable potential to cause or contribute to an in-stream excursion above the numeric water quality criterion. DEC is requiring that the permittee monitor arsenic, copper, manganese, nickel, and zinc to make future determinations about reasonable potential, the need for WQBELs, and/or the need for specific mixing zone authorizations for these parameters. Sampling information submitted with the permit applications (and previous monitoring required by the permit) do not indicate that the discharge contains any other pollutants known to bioaccumulate, bioconcentrate, or persist above background levels. Similarly, these data suggest that the pollutants that could be expected to cause carcinogenic, mutagenic, or teratogenic effects, or otherwise present a risk to, human health are likely not present in the discharge. There are no known water supply or contact recreation uses occurring in the vicinity of the discharge. DEC has determined that the permit satisfies 18 AAC 70.250(a)(1)(A-C), 18 AAC 70.255(b and c), and that the level of treatment at KNO is protective of human health.

[1] "Alaska Department of Natural Resources: Case, Land, and Water Information." http://dnr.alaska.gov/projects/las/#filetype/ADL/reporttype/abstract/searchtype/casefile/landflag/y/filenumber/33631, accessed on May 10, 2016.

[2] ADFG Fish Resource Monitor, Anadromous Waters Interactive Catalog," https://www.adfg.alaska.gov/sf/SARR/AWC/index.cfm?ADFG=main.interactive, accessed on May 10, 2016.

5.5.7 Aquatic Life and Wildlife

There are no known spawning areas for chum, coho, chinook, sockeye and pink salmon in the immediate vicinity of the KNO marine outfall in Cook Inlet. However, there are freshwater spawning locations in rivers in the vicinity of the KNO outfall and the presence of an active shoreline set-net fishery indicate that salmon pass through the area on their way to freshwater spawning grounds. CORMIX models of the KNO outfall indicate that relatively high dilution occurs relatively rapidly and pollutants discharged will have a relatively short residence time in the mixing zones. WET testing results from when KNO was operational exhibit minimal to no toxicity at critical dilutions required by the previous permit issuance. Furthermore, a mixing study will be required by the applicant to verify CORMIX modeling results (Fact Sheet section 5.6). Due to these items and the long operational history of wastewater treatment at KNO, the Department determined that the mixing zones will not create a significant adverse effect to fish spawning or rearing, form a barrier to migratory species, fail to provide a zone of passage, result in undesirable or nuisance aquatic life, result in permanent or irreparable displacement of indigenous organisms, or result in reduction in fish population levels and that 18 AAC 70.250(a)(2)(A-C) and 18 AAC 70.250(b)(1), are met.

5.5.8 Acute Mixing Zone

An acute mixing zone is sized to prevent lethality to passing organisms, while a chronic mixing zone is sized to protect the ecology of the water body as a whole (18 AAC 70). According to EPA (EPA 1991), lethality to passing organisms would not be expected if an organism passing through the effluent plume (along the path of maximum exposure) is not exposed to concentrations exceeding the acute criteria when averaged over a one-hour time period [18 AAC 70.255(d)]. Furthermore, the travel time of an organism drifting through the acute mixing zone must be less than approximately 15 minutes if a one hour exposure time is not to exceed the acute criterion (EPA 1991). Acute mixing zone sizes were calculated using CORMIX. The acute mixing zone modeling resulted in an acute mixing zone size of 478 meters long by 0.06 meters wide. Mixing zone CORMIX modeling indicates that a drifting organism passing through the KNO acute mixing zone will be exposed to acute concentrations for no longer than 157 seconds (2.62 minutes). Furthermore, the mixing zone is not expected to cause a toxic effect in the water column, sediments, or biota outside the boundaries of the mixing zone. The Department determined that 18 AAC 70.255(b)(1-2) and 18 AAC 70.255(d) to be met.

5.5.9 Endangered Species

In accordance with 18 AAC 70.250(a)(2)(D), the authorized mixing zone will not cause an adverse effect on threatened or endangered species. The National Marine Fisheries Service (NMFS) and the United States Fish and Wildlife Service (USFWS), were contacted in 2015, however only NMFS responded. A summary of critical habitat and endangered species is provide in Fact Sheet section 9.2. Due to the relatively short residence time of pollutants in the proposed mixing zone and relatively low WET test results, the Department has concluded that the mixing zones are sized to not cause an adverse effect on threatened or endangered species.

5.6 Mixing zone model verification study

DEC is requiring KNO to conduct a mixing study. KNO is responsible for submitting a detailed study-plan to DEC for approval. This study plan must be submitted to DEC within one-year of the commencement of discharge operations (one year from resumption of discharges at the facility) and implemented within six months of DEC's approval. The study plan shall be structured such that it will confirm or modify results from CORMIX modeling submitted with the Form 2M Mixing Zone application. The study plan shall contain information on the methods used to verify or modify the results of the CORMIX modeling submitted with the Form 2M Mixing Zone application and a detailed

implementation procedure for collecting data. Once the study plan is approved by DEC, KNO will implement the procedures and provide a report that summarizes the findings of the study, specifically to determine if the mixing zone meets all applicable regulatory requirements including it is as small as practicable. This information may be submitted during the permit period depending on when discharge operations are commenced or the information may be submitted as a supplement with the application for permit reissuance, whichever occurs first. Data acquired during the mixing study may be used to fulfill ambient monitoring requirements of the discharge permit where applicable. The permit was drafted to include language allowing the permittee a wide measure of flexibility to propose a study that is feasible and with a goal of meeting the stated objectives.

6.0 ANTIBACKSLIDING

18 AAC 83.480 requires that "effluent limitations, standards, or conditions must be at least as stringent as the final effluent limitations, standards, or conditions in the previous permit." 18 AAC 83.480(c) also states that a permit may not be reissued "to contain an effluent limitation that is less stringent than required by effluent guidelines in effect at the time the permit is renewed or reissued." The effluent limitations in this permit reissuance are consistent with 18 AAC 83.430.

The permit effluent limitations are as stringent as in the previous permit. After reviewing data that was not available during the time the previous NPDES permit was developed, DEC has made revisions to WET testing conditions in this permit issuance to make this permit consistent with other recently issued APDES permits. TRC and WET data were not available during the previous permit development and these data constitute new information that suggests newer, revised, WET requirements be implemented in this permit issuance, consistent with other recently issued APDES permits. (See Fact Sheet section 4.4 for WET testing and monitoring information.) All other permit effluent limits, standards, and conditions in AK0000507 are at least as stringent—if not more so—as in the previously issued permit and are consistent with 18 AAC 83.480. Accordingly, no further backsliding analysis is required for this permit issuance.

7.0 ANTIDEGRADATION

Section 303(d)(4) of the CWA states that, for water bodies where the water quality meets or exceeds the level necessary to support the water body's designated uses, WQBELs may be revised as long as the revision is consistent with the State's Antidegradation Policy. The Antidegradation Policy of the WQS (18 AAC 70.015) states that the existing water uses and the level of water quality necessary to protect existing uses must be maintained and protected. This section analyzes and provides rationale for the Department's decisions in the permit issuance with respect to Antidegradation Policy.

The Department's approach to implementing the Antidegradation Policy, found in 18 AAC 70.015, is based on the requirements in 18 AAC 70 and the Department's *Policy and Procedure Guidance for Interim Antidegradation Implementation Methods*, dated July 14, 2010. Using these procedures and policy, the Department determines whether a waterbody, or portion of a waterbody, is classified as Tier 1, Tier 2, or Tier 3, where a higher numbered tier indicates a greater level of water quality protection. At this time, no Tier 3 waters have been designated in Alaska. Cook Inlet is not listed as impaired on DEC's most recent *Alaska's Final 2010 Integrated Water Quality Monitoring and Assessment Report*; therefore, a Tier 1 designation is not warranted. Accordingly, this antidegradation analysis conservatively assumes that the discharge is to a Tier 2 waterbody.

The State's Antidegradation Policy in 18 AAC 70.015(a)(2) states that if the quality of water exceeds levels necessary to support propagation of fish, shellfish, and wildlife and recreation in and on the water (i.e. Tier 2 waters), that quality must be maintained and protected. The Department may allow a reduction of water quality only after finding that five specific requirements of the antidegradation policy at 18 AAC 70.015(a)(2)(A – E) are met. The Department's findings follow:

1. **18 AAC 70.015 (a)(2)(A).** *Allowing lower water quality is necessary to accommodate important economic or social development in the area where the water is located.*

   Based on the evaluation required per 18 AAC 70.0015(a)(2)(D) below, the Department has determined that the most reasonable and effective pollution prevention, control, and treatment methods are being used and that the localized lowering of water quality is necessary.

   The KNO facility, located on Cook Inlet 60 miles southwest of Anchorage, is an important part of the Alaska and Kenai Peninsula economies. While in operation and discharge is occurring, KNO will provide stable family-wage jobs for over 140 local residents as well as daily employment for over 200 specialized contractors. KNO's four-year turnaround schedule helps preserve a strong local support industry that provides additional jobs for the community as well as available services for other local industry operations. A study of the economic and social benefits of reopening KNO was conducted in 2013 by the McDowell Group (McDowell 2013). This study estimates 815 direct and indirect jobs and labor income to Alaskans of $110 million. KNO also provides significant ongoing tax revenue to Federal, State, and local governments through its property, corporate income, and sales taxes, paying $2.2 million in property tax alone. Local housing markets are supported by KNO employees residing in surrounding Kenai Peninsula communities. KNO's large, steady, base-load power requirements allow the local cooperative power utility to provide the economy of scales that would not be available without a large industrial base client.

   The Department concludes that the operation of KNO and the authorization of the discharge accommodates important economic development in Alaska and the Kenai Peninsula and the anticipated lowering of water quality is necessary for these purposes and that the finding is met.

2. **18 AAC 70.015 (a)(2)(B).** *Except as allowed under this subsection, reducing water quality will not violate the applicable criteria of 18 AAC 70.020 or 18 AAC 70.235 or the whole effluent toxicity limit in 18 AAC 70.030.*

   Section 1.2.1 of the permit requires that the discharge shall not cause a violation of the WQS at 18 AAC 70 except if excursions are authorized in accordance with provisions in 18 AAC 70.200 – 70.270 (i.e., mixing zone, variance, etc.). As a result of KNO's reasonable potential to exceed water quality criteria for ammonia, TRC, pH, temperature, and WET, and available assimilative capacity in the receiving water, a mixing zone is authorized in the KNO wastewater discharge permit in accordance with 18 AAC 70.240 (See Fact Sheet section 5.5). The resulting effluent end-of-pipe limits and monitoring requirements in the permit (See Table 1) protect water quality criteria, and therefore, will not violate water quality criteria found at 18 AAC 70.020.

   There are no site-specific criteria associated with 18 AAC 70.235 the discharge and associated water body.

   The effluent limits for WET are protective of the limit in 18 AAC 70.030. Alaska WQS at 18 AAC 70.030 requires that an effluent discharged to a waterbody may not impart chronic toxicity to aquatic organisms, expressed as 1.0 TUc, at the point of discharge, or if the Department authorizes a mixing zone in a permit, approval, or certification, at or beyond the mixing zone boundary, based on the minimum effluent dilution achieved in the mixing zone. The Department has authorized a chronic mixing zone for this permit with a dilution of 633, and subsequently assigned a chronic toxicity trigger based on the minimum effluent dilution achieved in the mixing zone of 633 TUc. If the WET trigger is met, KNO's wastewater discharge will not violate the WET limit in 18 AAC 70.030.

   DEC determined that the reduction in water quality will not violate the criteria of 18 AAC 70.020, 18 AAC 70.235, or 18 AAC 70.030, and that the finding is met.

3. **18 AAC 70.015(a)(2)(C).** *The resulting water quality will be adequate to fully protect existing uses of the water.*

The WQS serve the specific purpose of protecting the existing uses of the receiving waterbody. Cook Inlet is protected for all designated uses (see Fact Sheet section 5.4); therefore, the most stringent water quality criteria found in 18 AAC 70.020 and in the Alaska Water Quality Criteria Manual for Toxic and Other Deleterious Organic and Inorganic Substances (DEC 2008) were selected for use in the RPA for KNO wastewater discharge effluent. This will ensure that the resulting water quality at and beyond the boundary of the authorized mixing zone will fully protect all designated uses of the receiving waterbody.

DEC determined that KNO wastewater treatment will result in adequate water quality to fully protect existing uses of the waterbody and that the finding is met.

4. **18 AAC 70.015(a)(2)(D).** *The methods of pollution prevention, control, and treatment found by the department to be most effective and reasonable will be applied to all wastes and other substances to be discharged.*

   KNO pollutant control and treatment measures currently meet the most stringent federal standards for Best Available Treatment Economically Achievable (BAT). Best management practices (BMPs) at KNO are implemented and reviewed annually to ensure waste discharges are minimized and that pollutants in the effluent are effectively managed. The following paragraphs summarize all the methods used to control, treat, and minimize pollutants in KNO effluent.

   - <u>pH Control</u>: A sulfuric acid injection system and neutralization tank is in place at KNO to neutralize high pH wastewater streams. Backwash and rinse water from the deionization system for the boiler feed water, boiler blow down, and cooling tower blow down are routed to the neutralization tank for pH control before entering the PE system. In addition, pH adjustment may be needed to meet permit limits. High pH is lowered with sulfuric acid, which is added in the large PE system basin. Low pH is adjusted with soda ash. The large PE system basin is continuously monitored by three pH meters. If the pH falls outside the desired range, flow to the outfall is automatically stopped. When flow to the outfall is stopped, the effluent is circulated in the basins until the proper pH range is reached and discharge can recommence.
   - <u>Ammonia and Organic Nitrogen</u>: Recycled wastewater from Urea Plant 2 is treated in the hydrolyzer stripper while recycled wastewater from Urea Plant 5 is treated in the hydrolyzer and desorber rectifier. Steam is used to hydrolyze urea into ammonia and carbon dioxide. Steam is then used to strip ammonia from process condensate in the stripper and desorber.
   - <u>Oil and Grease</u>: Floor drainage from the urea process areas, which contain oil, is routed to an oil coalesce before going to the hydrolyzer or desorber in Urea Plant 5. Floor drainage in the compressor building is routed to an oil separator sump and then to the GE system.
   - <u>Metals and Temperature</u>: Metals and temperature control consist of settling and cooling. The GE system consists of three ponds: two smaller settling basins (100,000 gallon capacity each) are operated in series—unless one is down for maintenance—and flow into a larger equalization basin (two million gallon capacity). The effluent from the largest GE basin is routed to the largest PE basin prior to discharge. Wastewater entering the PE system receives solids settling, cooling, and pH control. The PE system consists of three basins. Two smaller settling basins, each with a 100,000 gallon capacity, are operated in series (unless one is down for maintenance). Wastewater from the two smaller basins flows into a larger equalization basin with a 1.4 million gallon capacity where it is mixed with wastewater from the GE system.
   - <u>Chlorine</u>: Chlorine is added to the cooling system as an oxidizing disinfectant to control biological fouling due to bacterial and algal growth. Free TRC of 0.5 mg/L in the cooling system is targeted, however, due to high chlorine demand, measured TRC levels of up to 2.1 mg/L can be present in wastewater effluent (with an MEC of 4.75 mg/L as determined by the RPA). Agrium implements an algae control program in the cooling tower which uses non-oxidizing biocides to minimize chlorine usage in the cooling dower during summer months. In 2015, KNO

conducted an engineering study (included with the KNO Form 2M Mixing Zone Application) to evaluate the costs of three chlorine reduction options including: 1.) dechlorinating cooling tower blow down with a sodium metabisulfite treatment system, 2.) reduce ammonia levels in the cooling tower by upgrading the ammonia water treatment system to maximize condensate recycle to the boilers, 3.) use bromine disinfection rather than chlorine. The estimated capital costs of option 1 (installing a meta bisulfite dechlorination system at the cooling tower blow down) was $653,240 with annual operation and maintenance of $252,356. The capital cost of option 2 (upgrading the condensate treatment system to reduce ammonia levels in the cooling tower) was $2.8 million. Although there is an annual recovery capital cost of $343,876 associated with a reduction in natural gas usage, the initial capital cost of this option makes start-up costs of KNO non-economic. Option 3 was rejected as infeasible since only bromochlorohydantoin disinfectants are available for cooling tower applications and a significant reduction in chlorine cannot be achieved by this method. DEC is requiring, as a BMP, further treatability studies during this permit to estimate methods of reducing or removing TRC from the effluent (See Fact Sheet section 8.4). Furthermore, TRC specific best management practices have been added to the permit to reduce or limit the amount of TRC discharged during this permit issuance.

DEC determined that the methods of pollution prevention, control, and treatment to be most effective and reasonable for applying to all wastes and substances discharged from KNO, are the practices and requirements set out in the permit and that the finding is met.

5. **18 AAC 70.015(a)(2)(E).** *All wastes and other substances discharged will be treated and controlled to achieve (i) for new and existing point sources, the highest statutory and regulatory requirements; and (ii) for nonpoint sources, all cost-effective and reasonable best management practices.*

The applicable "highest statutory and regulatory treatment requirements" are defined in 18 AAC 70.990(30) (as amended June 26, 2003) and in the Implementation Methods. Accordingly, there are three parts to the definition, which are:

- (A) any federal technology-based effluent limitation guidelines (ELG) identified in 40 CFR § 125.3 and 40 CFR § 122.29, as amended through August 15, 1997, adopted by reference at 18 AAC 83.010(c)(9);
- (B) minimum treatment standards in 18 AAC 72.040; and
- (C) any treatment requirement imposed under another state law that is more stringent than a requirement of this chapter.

The first part of the definition includes all federal technology-based ELGs including "fertilizer manufacturing" at 40 CFR § 418, adopted by reference at 18 AAC 83.010(g)(3), which are incorporated in the permit.

The second part of the definition 18 AAC 70.990(B) (2003) appears to be in error, as 18 AAC 72.040 describes discharges to sewers and not minimum treatment. The correct reference appears to be the minimum treatment standards found at 18 AAC 72.050, which refers to domestic wastewater discharges only. The permit includes stipulations that meet the intent of 18 AAC 70.990.

The third part includes any more stringent treatment required by state law, including 18 AAC 70 and 18 AAC 72. Neither the regulations in 18 AAC 15 and 18 AAC 72 nor another state law that the Department is aware of impose more stringent requirements than those found in 18 AAC 70.

After review of the applicable statutory and regulatory requirements, including 18 AAC 70, 18 AAC 72, and 18 AAC 83, the Department finds that KNO's wastewater discharge meets the highest applicable statutory and regulatory requirements and that this finding is met.

8.0 OTHER PERMIT CONDITIONS

8.1 Electronic Reporting (E-Reporting) Rule

The Permittee is responsible for electronically submitting DMRs and other reports in accordance with 40 CFR §127. The start dates for e-reporting are provided in 40 CFR §127.16. DEC has established a website at http://dec.alaska.gov/water/Compliance/EReportingRule.htm that contains general information. As DEC implements the E-Reporting Rule, more information will be posted on this webpage. The permittee will be further notified by DEC in the future about how to implement the conditions in 40 CFR §127.

8.2 Quality Assurance Project Plan

The permittee is required to develop procedures to ensure that the monitoring data submitted are accurate and to explain data anomalies if they occur. The permittee is required to update the Quality Assurance Project Plan (QAPP) within 90 days of the effective date of the final permit. The permittee must also provide DEC written notice upon completion and implementation of the QAPP. The QAPP shall consist of standard operating procedures the permittee must follow for collecting, handling, storing and shipping samples; laboratory analysis; and data reporting. The plan shall be retained on site and made available to the Department upon request. DEC has maintained QAPP requirements from the previous permit issuance.

8.3 Operation and Maintenance Plan

The permit requires the permittee to properly operate and maintain all facilities and systems of treatment and control. Proper operation and maintenance is essential to meeting discharge limitations, monitoring requirements, and all other permit requirements at all times. The permittee is required to develop or update and implement an Operation and Maintenance (O & M) Plan for its facility within 180 days of the effective date of the final permit. The permittee must also provide DEC written notice upon completion and implementation of the O & M Plan. If an O & M Plan has already been developed and implemented, the permittee need only to review the existing plan to make sure it is up to date and all necessary revisions are made. The plan shall be retained on site and made available to the Department upon request.

8.4 Best Management Practices Plan and Total Residual Chlorine Treatability Study

In accordance with AS 46.03.110 (d), the Department may specify in a permit the terms and conditions under which waste material may be disposed. The permit requires the permittee to develop a BMP Plan in order to prevent or minimize the potential for the release of pollutants to waters and lands of the State of Alaska through plant site runoff, spillage or leaks, or erosion. The permit contains certain BMP conditions that must be included in the BMP plan. The permit requires the permittee to develop or update and implement a BMP plan within 180 days of the effective date of the final permit. The permittee must also provide DEC written notice upon completion and implementation of the BMP Plan. The Plan must be kept on site and made available to the Department upon request.

The previous permit issuance contained a section for a pollution prevention framework that identifies methods for conducting pollution prevention investigations and requires that the framework be submitted to DEC. DEC revised the BMPs from the previous permit to be consistent with available guidance documents and consolidated several sections. The majority of BMP requirements have been retained for this permit issuance with the addition of a specific BMP requirement to investigate methods to reduce or eliminate TRC from their effluent, as practicable, in the form of a TRC Treatability Study. As part of the specific BMPs, the permittee is required to submit annual pollution prevention reports that describe the schedule, status and progress of efforts to meet pollution prevention objectives (including TRC treatability). The permittee provided similar reports during the previous permit issuance that were a

valuable reference in the development of this APDES permit. See Permit Section 2.2.6.3 for specific details about the TRC Treatability Study.

DEC added permit sections that clarify what is required by a BMP plan while consolidating the pollution prevention framework from the previous permit as reporting requirements of a single BMP plan in this permit issuance. The BMP plan is required to be consistent with general guidance contained in *Guidance Manual for Developing Best Management Practices* (EPA 833-B-93-004, October 1993). DEC added sections to the BMP plan components that are consistent with EPA guidance, specifically the statement of BMP policy and the establishment of a BMP committee. The BMP plan and any amendments must be reviewed and certified annually.

DEC reviewed KNO's effluent data for TRC that was not available when the previous permit was issued and determined that TRC is a pollutant of concern, has reasonable potential to cause or contribute to an excursion above the water quality criteria, and has developed a WQBEL that will be protective of WQS at the boundary of the acute and chronic mixing zones. TRC is a toxic parameter that when used with other biocides is effective at controlling the growth of algae and bacteria that contributes to biological fouling and the use of TRC is a necessary component of KNO's operations. Due to the fact that TRC drives the size of the acute and chronic mixing zones, DEC has included specific BMPs for KNO to continue to investigate methods to reduce or eliminate TRC from their effluent, to the degree practicable. The reporting and investigation of the TRC treatability study shall follow the procedures outlined in the pollution prevention framework of the BMP Plan.

8.5 Standard Conditions

APPENDIX A of the permit contains standard regulatory language that must be included in all APDES permits. These requirements are based on the regulations and cannot be challenged in the context of an individual APDES permit action. The standard regulatory language covers requirements such as monitoring, recording, reporting requirements, compliance responsibilities, and other general requirements.

9.0 OTHER LEGAL REQUIREMENTS

9.1 Ocean Discharge Criteria Evaluation

Section 403(a) of the CWA, Ocean Discharge Criteria, prohibits the issuance of a permit under Section 402 of the CWA for a discharge into the territorial sea, the water of the contiguous zone, or the oceans except in compliance with Section 403. Permits for discharges seaward of the baseline of the territorial seas must comply with the requirements of Section 403, which include development of an Ocean Discharge Criteria Evaluation (ODCE).

An interactive map depicting Alaska's baseline plus additional boundary lines is available at:

http://www.arcgis.com/home/webmap/viewer.html?url=http%3A%2F%2Fmapping.fakr.noaa.gov%2Farcgis%2Frest%2Fservices%2FNOAA_Baseline%2FMapServer&source=sd

The map is provided for information purposes only. The U.S. Baseline committee makes the official determinations on baseline.

A review of the baseline line maps revealed that the KNO outfall terminus is positioned landward of the baseline of the territorial sea; therefore, Section 403 of the CWA does not apply to the permit, and an ODCE is not required to be completed for this permit reissuance. Further, the permit requires compliance with WQS such that 40 CFR 125.122(b) is met and therefore the discharge is presumed not to cause unreasonable degradation of the marine environment.

9.2 Endangered Species Act

NMFS is responsible for administration of the Endangered Species Act (ESA) for listed cetaceans, seals, sea lions, sea turtles, anadromous fish, marine fish, marine plants, and corals. All other species (including polar bears, walrus, and sea otters) are administered by the USFWS.

The Endangered Species Act (ESA) requires federal agencies to consult with NOAA, NMFS, and USFWS if their actions could beneficially or adversely affect any threatened or endangered species. As a state agency, DEC is not required to consult with federal agencies regarding permitting actions; however, DEC voluntarily requested information from NOAA and USFWS on January 13, 2015 and August 19, 2015 regarding threatened and/or endangered species or critical habitat that is applicable to the area of the Agrium KNO discharge. NOAA responded on August 19 that the Department should "consider effects to Cook Inlet beluga whales and their critical habitat, western Distinct Population Segment Steller sea lions, and humpback whales (sic)."

The Department received more detailed comments regarding species listed under the ESA for a facility in the immediate vicinity of Agrium KNO (DEC 2015, Conoco Phillips permit). The Department is including this information here as reference:

> "In a letter dated May 9, 2014 NMFS responded that the following species are listed under the ESA and have some potential to be in the vicinity of the facility:
>
> - Cook Inlet beluga whales (*Delphinapterus leucas*) are sometimes observed in water near Kenai and Nikiski and should be considered when evaluating the effects of this permit. The critical habitat for the Cook Inlet beluga whales covers 7,000 square kilometers (3,013 square miles) of marine environment including the waters surrounding the facility.
> - The following fish species were identified as Evolutionarily Significant Units of Pacific salmon stocks listed as occurring within Alaskan waters, but as being highly unlikely to occur within the project area:
> - Lower Columbia River spring Chinook,
> - Upper Columbia River spring Chinook,
> - Lower Columbia River steelhead,
> - Upper Columbia River steelhead,
> - Puget Sound Chinook,
> - Snake River spring/summer Chinook,
> - Snake River fall Chinook,
> - Snake River basin steelhead, and
> - Upper Willamette River steelhead.
>
> NMFS additionally noted that all marine mammals are protected under the Marine Mammal Protections Act and that the harbor porpoise (*Phocoena phocoena)* and harbor seal *(Phoca vitulina)* are regularly documented in and around the Kenai area.
>
> In an email response dated September 23, 2013 USFWS asked if there was a federal nexus (i.e., federal funding or permits involved in the reissuance of the permit) and indicated that projects without a federal nexus are referred to their website at http://www.fws.gov/alaska/fisheries/endangered/ for additional technical assistance. The permit does not involve a federal nexus and the website was reviewed for additional ESA information. The short-tailed albatross (*Phoebastria albatrus)* and the Steller's eider (*Polysticta stelleri*) may occur in the vicinity but are not expected to be impacted by the discharge from the facility."

9.3 Essential Fish Habitat

Essential fish habitat (EFH) includes the waters and substrate (sediments, etc.) necessary for fish from commercially-fished species to spawn, breed, feed, or grow to maturity. The Magnuson-Stevens Fishery Conservation and Management Act (January 21, 1999) requires federal agencies to consult with NOAA when a proposed discharge has the potential to adversely affect (reduce quality and/or quantity of) EFH.

As a state agency, DEC is not required to consult with federal agencies regarding permitting actions, however, DEC voluntarily requested EFH information for the vicinity of the facility on January 13, 2015. Furthermore, the Department accessed EFH information via use of NOAA's Habitat Conservation Interactive EFH Mapper located at: http://www.habitat.noaa.gov/protection/efh/efhmapper/index.html. The Data Query Tool was used for the Agrium Kenai Operations near the outfall location. This tool indicated that no Habitat Areas of Particular Concern nor EFH areas protected from fishing were identified at the location.

9.4 Permit Expiration

The permit will expire five years from the effective date of the permit.

10.0 References

DEC (Alaska Department of Environmental Conservation), 2010. "Alaska's Final 2010 Integrated Water Quality Monitoring and Assessment Report," July 15, 2010.

DEC, 2015. Alaska Pollutant Discharge Elimination System Permit Fact Sheet – Final, AK0001155 – ConocoPhillips Alaska Inc., Kenai Liquefied Natural Gas Facility, June 10, 2015.

DEC, 2014. Alaska Pollutant Discharge Elimination System Fact Sheet – Final, AKG315100 – Mobile Oil and Gas Exploration Facilities in State Waters in Cook Inlet,"

DEC, 2014. Alaska Pollutant Discharge Elimination System (APDES) Permits Reasonable Potential Analysis and Effluent Limits Development Guide, June 30, 2014.

DEC, 2008. Alaska Water Quality Criteria Manual for Toxics and Other Deleterious Organic and Inorganic Substances, as amended through December 12, 2008.

DEC, 2010. "Interim Antidegradation Implementation Methods," Policy and Procedure 05.03.103, July 14, 2010.

DEC, 2014. "Final Ocean Discharge Criteria Evaluation General Permit AKG315100 – Mobile Oil and Gas Exploration Facilities in State Waters in Cook Inlet," May 2014.

DNR (Alaska Department of Natural Resources), "Case, Land, and Water Information," http://dnr.alaska.gov/projects/las/#filetype/ADL/reporttype/abstract/searchtype/casefile/landflag/y/filenumber/33631 , accessed on May 10, 2016.

Johnson, J., and V. Litchfield. 2016. Catalog of waters important for spawning, rearing, or migration of anadromous fishes – Arctic Region, Effective June 1, 2016. Alaska Department of Fish and Game, Special Publication No. 16-01, Anchorage.

McDowell Group, 2013. The Economic Benefits of Reopening the Agrium Kenai Nitrogen Plant, May 2013.

NOAA (National Oceanic and Atmospheric Administration), National Marine Fisheries Service, Habitat Conservation, "Essential Fish Habitat Mapper," <http://www.habitat.noaa.gov/protection/efh/efhmapper/index.html>, accessed on April 20, 2016.

USEPA (United States Environmental Protection Agency), 2000. Appendix to Bioaccumulation Testing and Interpretation for the Purpose of Sediment Quality Assessment, Status and Needs, Chemical-Specific Summary Tables, EPA-823-R-00-002, USEPA, Washington, DC, February 2000.

USEPA, 1974. Development Document for Effluent Limitations Guidelines and New Source Performance Standards for the Basic Fertilizer Chemicals Segment of the Fertilizer Manufacturing Point Source Category. USEPA Effluent Guidelines Division, Office of Air and Water Programs, Washington, DC, March 1974.

USEPA, 1993. Guidance Manual for Developing Best Management Practices (BMP), EPA 833-B-93-004, USEPA Office of Water, October 1993.

USEPA, 2010. National Pollutant Discharge Elimination System Permit Writer's Manual, EPA-833-K-10-001, USEPA Office of Water Management, Water Permits Division, Washington, DC, September 2010.

USEPA, 2002. Short-term Methods for Estimating the Chronic Toxicity of Effluents and Receiving Waters to Marine and Estuarine Organisms, Third Edition. USEPA, Office of Water, EPA-821-R-01-104, Washington, DC.

USEPA, 2002. Short-term Methods for Estimating the Chronic Toxicity of Effluents and Receiving Waters to West Coast Marine and Estuarine Organisms, First Edition. USEPA, Office of Research and Development, National Exposure Research Laboratory, EPA-600-R-95-136, Cincinnati, OH.

10.0 References (Continued)

USEPA, 1991. Technical Support Document for Water Quality-based Toxics Control, EPA/505/2-90-001, USEPA Office of Water, Washington, DC, March 1991.

APPENDIX A. FACILITY INFORMATION

Figure 1: Agrium Kenai Nitrogen Operations Map

For general information purposes only

0 0.1 0.2 0.4 Miles

Date: 6/7/2016

Figure 2: Agrium Kenai Nitrogen Operations Process Flow Diagram

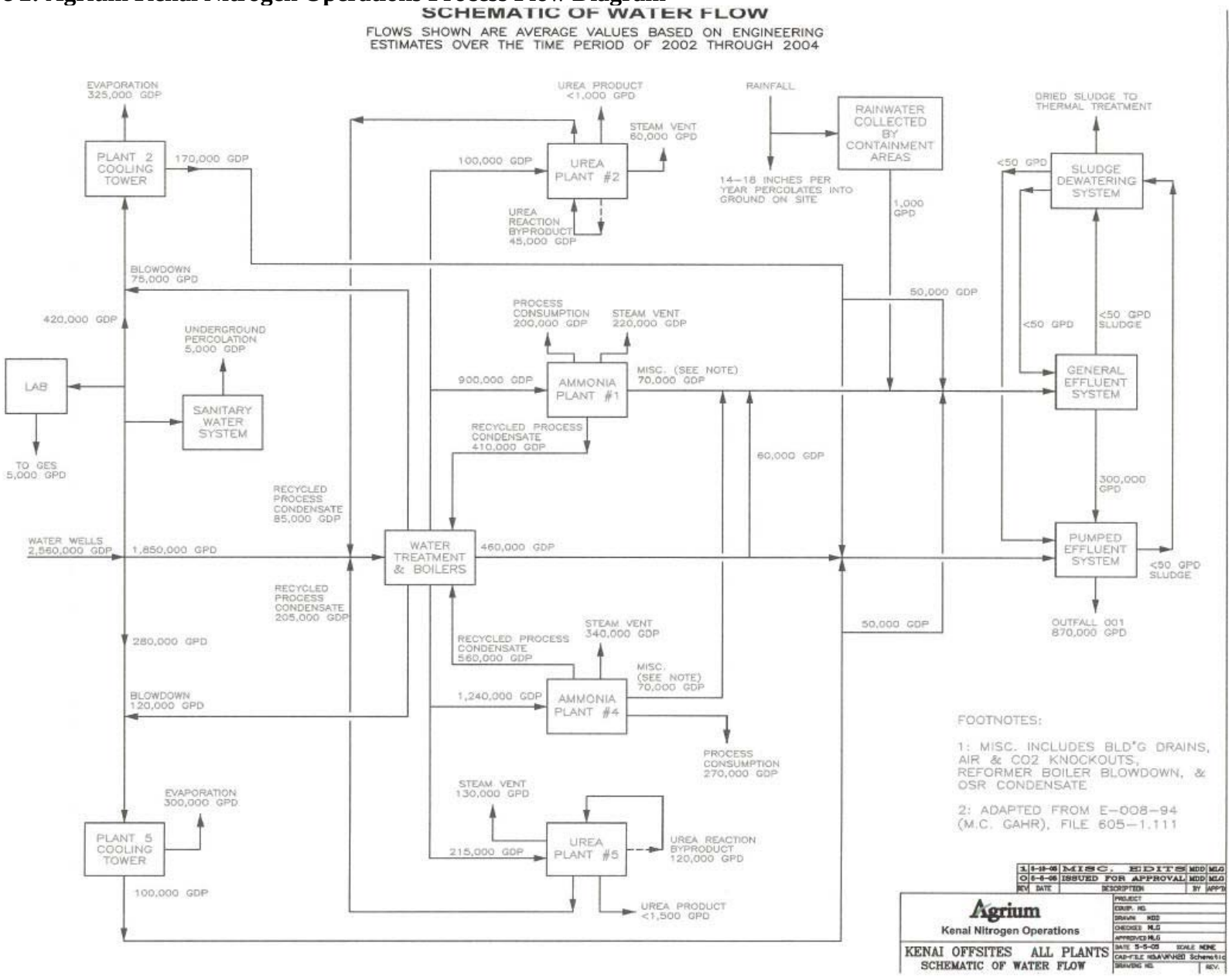

APPENDIX B. BASIS FOR EFFLUENT LIMITATIONS

The Clean Water Act (CWA) requires fertilizer manufacturing facilities to meet effluent limits based on available wastewater treatment technology, specifically, technology-based effluent limits (TBELs). TBELs are national in scope and establish performance standards for all facilities within an industrial category or subcategory. The Department may find, by analyzing the effect of an effluent discharge on the receiving water body, that TBELs are not sufficiently stringent to meet water quality standards (WQS). In such cases, the Department is required to develop more stringent water quality-based effluent limits, which are designed to ensure that the WQS of the receiving water body are met.

TBELs for fertilizer manufacturing facilities do not limit every parameter that may be present in the effluent. TBELs have only been developed for ammonia and organic nitrogen. Depending on where the facility draws its water and how it handles its wastewater, the effluent may contain other pollutants not regulated by TBELs. When TBELs do not exist for a particular pollutant expected to be in the effluent, the Department must determine if the pollutant may cause or contribute to an exceedance of a WQS for the water body. If a pollutant causes or contributes to an exceedance of a WQS, a WQBEL for the pollutant must be established in the permit.

B.1 Effluent Limitation Guideline

The CWA requires technology based controls on effluent from fertilizer manufacturing facilities. Section 301(b)(2) of the CWA requires that, by March 31, 1989, all permits contain effluent limitations which control toxic pollutants and nonconventional pollutants through the use of "best available technology economically achievable" (BAT) and "best conventional pollutant control technology" (BCT) for conventional pollutants. In no case may BCT or BAT be less stringent than "best practicable control technology currently available", which is a minimum level of control required by section 301(b)(1)(A) of the CWA.

The effluent guidelines and standard for fertilizer manufacturing can be found at 40 CFR Part 418, as adopted by reference at 18 AAC 83.010(g)(3). Agrium Kenai Nitrogen Operations (the facility) produces both ammonia and urea, therefore it is regulated under 40 CFR Part 418 Subpart B (Ammonia Subcategory) and Subpart C (Urea Subcategory). Subpart C is divided into two types of urea production, including the production of urea solutions and the production of prilled and granular urea. The facility is subject to the provisions applicable to prilled and granular urea production. Table 4 lists the ELG requirements for the Ammonia and Urea Subcategories to 40 CFR § 418 for the facility (40 CFR § 418.23 and 40 CFR § 418.33, respectively).

Table 4. Effluent limitations and guidelines representing the degree of effluent reduction attainable by the application of BAT for the Ammonia and Urea Subcategories to 40 CFR § 418.

Effluent Characteristics	Effluent limitations (Ammonia Subcategory)	
	Maximum for any 1 day	Average of daily values for 30 consecutive days shall not exceed:
Ammonia (as N), lbs/1,000 lbs of product	0.05	0.025
	Effluent limitations (Urea Subcategory)	
	Maximum for any 1 day	Average of daily values for 30 consecutive days shall not exceed:
Ammonia (as N), lbs/1,000 lbs of product	0.53	0.27
Organic Nitrogen (as N), lbs/1,000 lbs of product	0.86	0.46

No significant modification has been made to the facility since 1982, therefore, the facility is classified as an existing source and is subject to the most stringent standard for existing sources, which is BAT. TBELs are calculated from BAT standards listed in 40 CFR § 418.23 and § 418.33(b) which are based on the facility's rate of production; in this case historical production rates from when all four production plants were operational were used to calculate BAT TBELs (2000 – 2004). Calculated TBELs for the facility (including estimated production rates) are included in Table 5.

Table 5. Production rates and calculated TBELs for Agrium Kenai Nitrogen Operations

Plant	Avg. Daily Production (1000 lbs/day)	NH3-N Daily Max TBEL (lbs/day)	NH3-N Mo. Avg TBEL (lbs/day)	Organic-N Daily Max TBEL (lbs/day)	Organic-N Mo. Avg TBEL (lbs/day)
Plant 1 (NH3)	3,600	180	90	n/a	n/a
Plant 4 (NH3)	3,561	178	89	n/a	n/a
Plant 2 (Urea)	1,763	934	476	1,516	811
Plant 5 (Urea)	3,248	1,721	877	2,793	1,494
Calculated TBELs (sum)		3,013	1,532	4,309	2,305
Previous NPDES Permit Limits		3,636	1,849	5,313	2,842

B.1.1 Mass-Based Limitations

The regulation at 18 AAC 83.540 requires that effluent limits be expressed in terms of mass, if possible. The mass based limits are expressed in pounds per day and are calculated as follows:

Mass based limit (lb/day) = concentration limit (mg/L) × design flow (mgd) × 8.343[1]

KNO's permit application lists the facility's design flow at 2.1 mgd, which is limited by the discharge pumps and piping. This design flow was used to calculate mass-based limits for TRC. A mass-based limit was not calculated for oil and grease in the previous permit issuance and this effluent limit is carried forward in this permit issuance.

B.2 Water Quality – Based Effluent Limitations

B.2.1 Statutory and Regulatory Basis

18 AAC 70.010 prohibits conduct that causes or contributes to a violation of the WQS.
18 AAC 15.090 requires that permits include terms and conditions to ensure criteria are met, including operating, monitoring, and reporting requirements.

The regulations require the permitting authority to make this evaluation using procedures that account for existing controls on point and nonpoint sources of pollution, the variability of the pollutant in the effluent, species sensitivity (for toxicity), and where appropriate, dilution in the receiving water body. The limits must be stringent enough to ensure that WQS are met and must be consistent with any available waste load allocation (WLA).

B.2.2 Reasonable Potential Analysis

When evaluating the effluent to determine if WQBELs based on chemical-specific numeric criteria are needed, the Department projects the receiving water body concentration for each pollutant of concern downstream of where the effluent enters the receiving water body. The chemical-specific concentration of the effluent and receiving water body and, if appropriate, the dilution available from the receiving water body, are factors used to project the receiving water body concentration. If the projected concentration of the receiving water body exceeds the numeric criterion for a limited parameter, then there is a reasonable potential that the discharge may cause or contribute to an excursion above the applicable WQS, and a WQBEL must be developed.

According to 18 AAC 70.990(38), a mixing zone is an area in a water body surrounding, or downstream of, a discharge where the effluent plume is diluted by the receiving water within which specified water quality criteria may be exceeded. Water quality criteria and limits may be exceeded within a mixing zone. A mixing zone can be authorized only when adequate receiving water dilution, and the concentration of the pollutant of concern in the receiving water body is below the numeric criterion necessary to protect the designated uses of the water body.

The Department evaluated ammonia, total residual chlorine (TRC), arsenic, chromium, copper, manganese, nickel, and zinc, for reasonable potential using the *APDES Permits Reasonable Potential Analysis and Effluent Limits Development Guide* (APDES RPA Guide, DEC 2014). Only ammonia and TRC had sufficient sample data to make reasonable potential and effluent limit decisions. Therefore, the Department (in accordance with Section 2.4.1 of the APDES RPA Guide) is requiring the permittee to sample: arsenic, copper, manganese, nickel, and zinc twice per year to establish a baseline data set which would inform future permitting decisions regarding these parameters.

[3] 8.341 is a conversion factor with units (lb x L) / (mg x gallon x 10^6)

B.2.3 Procedure for Deriving Water Quality-Based Effluent Limits

The *Technical Support Document for Water Quality-Based Toxics Control* (TSD) (EPA, 1991) and the WQS recommend the flow conditions for use in calculating WQBELs using steady-state modeling. The first step in developing a water quality-based effluent limit is to develop a WLA for the pollutant. A WLA is the concentration or loading of a pollutant that the permittee may discharge without causing or contributing to an exceedance of WQS or a TMDL in the receiving water body. If a mixing zone is authorized in the permit, the WQS apply at all points outside the mixing zone.

In cases where a mixing zone is not authorized, either because the receiving water body already exceeds the criterion, the receiving water body flow is too low to provide dilution, or for some other reason one is not authorized, the criterion becomes the WLA. Establishing the criterion as the WLA ensures that the permittee will not cause or contribute to an exceedance of the criterion.

B.2.4 Specific Water Quality-Based Effluent Limits

B.2.4.1 Toxic Substances

The WQS for toxic and other deleterious organic and inorganic substances for freshwater uses are codified in 18 AAC 70.020(b)(11). Individual criteria are summarized in the Department's, *Alaska Water Quality Criteria Manual for Toxics and Other Deleterious Organic and Inorganic Substances*, as amended through December 12, 2008. In the WQS, the most stringent criteria for metals, other than arsenic, is the chronic criteria for the protection of aquatic life.

As discussed in Fact Sheet section B.2.2, the Department evaluated ammonia, TRC, arsenic, chromium, copper, manganese, nickel, and zinc to determine if there was reasonable potential to exceed water quality criteria in the receiving water body. Table 6 presents the water quality criteria for ammonia and TRC. A summary of the reasonable potential analysis is provided in APPENDIX C.

Table 6: Water Quality Criteria

Parameter		Criterion (mg/L)
Ammonia [a]	Acute	8.1
	Chronic	1.2
Total Residual Chlorine	Acute	0.013
	Chronic	0.0075

a. DEC used an ambient temperature of 15 °C, a pH of 8.0, and a receiving water salinity of 20 g/kg to establish acute and chronic criteria for ammonia.

B.2.4.2 Floating, Suspended or Submerged Matter, including Oil and Grease

The WQS for floating, suspended or submerged matter, including oil and grease, are narrative. The most stringent standard, found at 18 AAC 70.020(b)(17)(A)(i), require that for marine waters, "Total aqueous hydrocarbons (TAqH) in the water column may not exceed 15 µg/L. Total aromatic hydrocarbons (TAH) in the water column may not exceed 10 µg/L. There may be no concentrations of petroleum hydrocarbons, animal fats, or vegetable oils in shoreline or bottom sediments that cause deleterious effects to aquatic life. Surface waters and adjoining shorelines must be virtually free from floating oil, film, sheen

or discoloration." The previous permit issuance contained monitoring for TAH and TAqH and a limit of 15 mg/L for Oil and Grease. DEC retains monitoring for TAH and TAqH and the 15 mg/L limit for Oil and Grease.

B.2.4.3 Total Residual Chlorine

The most stringent state water quality for TRC to protect designated uses requires that concentrations may not exceed 13 µg/L for acute aquatic life and 7.5 µg/L for chronic aquatic life [18AAC 70.020(b)(11)]. The Department has authorized a mixing zone with a dilution factor of 633 for chronic and 365 for the acute chlorine criteria. The reasonable potential analysis in Appendix C, takes into account these dilution factors. Based on the WQS of 13 µg/L for protection from acute effects on aquatic life and 7.5 µg/L for protection from chronic effects on aquatic life and on a maximum projected effluent concentration of 4.75 mg/L, the reasonable potential analysis indicates that TRC has reasonable potential to violate WQS at the boundary of the authorized mixing zone. The calculation of the WQBEL for chlorine, detailed in APPENDIX D, produces an average monthly limitation of 1.43 mg/L and a maximum daily limitation of 4.75 mg/L. Because there is reasonable potential for TRC to exceed water quality criteria at the end-of-the-pipe, and because TRC is the driving parameter in the authorized mixing zone, WQBELs were developed for TRC that are protective of the waterbody at the boundary of the mixing zone.

B.2.5 Selection of Most Stringent Limitations

B.2.5.1 Ammonia

DEC reviewed ambient data collected at a nearby NOAA buoy to determine applicable temperatures to set water quality criteria. Using methods in the *APDES Guide*, DEC determined that an ambient temperature of 15° C was a reasonable worst-case scenario to establish water quality criteria for ammonia. DEC calculated a WQBEL for ammonia to compare with the TBELs described in Fact Sheet section B.1. These values are listed in Table 7 below. Concentration based WQBELs were calculated for ammonia based on the dilution available in the authorized mixing zone, maximum expected effluent concentration, and water quality criteria, and then converted to mass-based limits using the design flow of KNO of 2.077 mgd. These values were considerably larger than those calculated using the ELG therefore, selecting the more stringent limits, DEC is using the TBELs for ammonia for this permit issuance.

Table 7. Selection of ammonia permit limits.

	Average Monthly (lbs/day)	Maximum Daily (lbs/day)
TBEL	1,849	3,636
WQBEL	8,960	18,769
Selected Limits	1,849	3,636

APPENDIX C. REASONABLE POTENTIAL DETERMINATION

The following describes the process the Department used to determine if the discharge authorized in the draft permit has the reasonable potential (RP) to cause or contribute to a violation of WQS. The Department used the process described in the *Technical Support Document for Water Quality-Based Toxics Control* (EPA, 1991) and DEC's guidance, *Alaska Pollutant Discharge Elimination System (APDES) Permits Reasonable Potential Analysis and Effluent Limits Development Guide* (June 30, 2014) to determine RP for any pollutant to exceed a water quality criterion (WQC).

To determine if there is reasonable potential for the discharge to cause or contribute to an exceedance of WQC for a given pollutant, the Department compares the maximum projected receiving water body concentration to the criteria for that pollutant. RP to exceed exists if the projected receiving water body concentration exceeds the criteria, and a WQBEL must be included in the permit (18 AAC 83.435).

The ambient concentration in the mass balance equation is based on a reasonable worst-case estimate of the pollutant concentration upstream from the discharge. For criteria that are expressed as maxima, the 85th percentile of the ambient data is generally used as an estimate of the worst-case. If ambient data are not available, DEC uses 15% of the most stringent given pollutant's criteria as a worst-case estimate. TRC is provided as an example. In this case, it is assumed that the upstream ambient concentration of TRC is equal to zero due to its propensity to decay in marine waters. This section discusses how the maximum projected receiving waterbody concentration is determined.

C.1 Mass Balance

For a discharge to a flowing water body, the maximum projected receiving water body concentration is determined using a steady state model represented by the following mass balance equation:

$$C_d Q_d = C_e Q_e + C_u Q_u \qquad \text{(Equation C-1)}$$

where,

C_d = Receiving water body concentration downstream of the effluent discharge

C_e = Maximum projected effluent concentration

C_u = 85th percentile measured receiving water body upstream concentration (or 15% of the criterion)

Q_d = Receiving water body flow rate = $Q_e + Q_u$

Q_e = Effluent flow rate (set equal to the design flow of the facility)

Q_u = Receiving water body flow

When the mass balance equation is solved for C_d, it becomes:

$$C_d = \frac{C_e Q_e + C_u Q_u}{Q_e + Q_u} \qquad \text{(Equation C-2)}$$

The above form of the equation is based on the assumption that the discharge is rapidly and completely mixed with the receiving stream. If a mixing zone based on a percentage of the critical flow in the receiving stream is authorized based on the assumption of incomplete mixing with the receiving water body, the equation becomes:

$$C_d = \frac{C_e Q_e + C_u(Q_U \times MZ)}{Q_e + (Q_u \times MZ)} \quad \text{(Equation C-3)}$$

Where MZ is the fraction of the receiving water body flow available for dilution. Where mixing is rapid and complete, MZ is equal to 1 and equation C-2 is equal to equation C-3 (i.e., all of the critical low flow volume is available for mixing).

If a mixing zone is not authorized, dilution is not considered when projecting the receiving water body concentration, and

$$C_d = C_e \quad \text{(Equation C-4)}$$

In other words, if a mixing zone is not authorized (either because the stream already exceeds WQS or the Department does not allow one), the Department considers only the concentration of the pollutant in the effluent regardless of the upstream flow and concentration. If the concentration of the pollutant in the effluent is less than the water quality standard, the discharge cannot cause or contribute to a water quality violation for that pollutant. In this case, the mixing or dilution factor (% MZ) is equal to zero and the mass balance equation is simplified to $C_d = C_e$.

Equation C-2 can be simplified by introducing a dilution factor (D):

$$D = \frac{Q_e + Q_u}{Q_e} \quad \text{(Equation C-5)}$$

After the dilution factor simplification, this becomes:

$$C_d = \frac{(C_e - C_U)}{D} + C_u \quad \text{(Equation C-6)}$$

C.2 Maximum Projected Effluent Concentration

To calculate the maximum projected effluent concentration, the Department used the procedure described in section 3.3 of the *TSD*, "*Determining the Need for Permit Limits with Effluent Monitoring Data*." In this procedure, the 99th percentile of the effluent data is the maximum projected effluent concentration which is used in the calculation of the maximum projected receiving water body concentration.

Since there are a limited number of data points available, the 99th percentile is calculated by multiplying the maximum reported effluent concentration by a reasonable potential multiplier (RPM). The RPM is the ratio of the 99th percentile concentration to the maximum reported effluent concentration and accounts for the statistical uncertainty in the effluent data. The RPM is calculated from sample estimates for the mean and standard deviation of the data set and associated normal cumulative distribution functions (equation C-8). When fewer than 10 data points are available, the *TSD* recommends making the assumption that the CV is equal to 0.6. A CV value of 0.6 is a conservative estimate that assumes a relatively high variability.

DEC used ProUCL, a statistical software program maintained by EPA, to determine that the monitoring data submitted for TRC follows a lognormal distribution. Therefore, the RPM equation in Section 2.4.2.2 of the *APDES Permits Reasonable Potential Analysis and Effluent Limits Development Guide* was used to determine the RPM for TRC.

$$RPM = \frac{\exp(\hat{\mu}_n + z_{99}\hat{\sigma})}{\exp(\hat{\mu}_n + p_n\hat{\sigma})} \quad \text{(Equation C-8)}$$

Where,

$z_{99} = the\ z - statistic\ at\ the\ 99th\ percentile = 2.326$

$\hat{\mu}_n = the\ sample\ mean\ calculated\ by\ ProUCL = 4.597$

$\hat{\sigma} = the\ sample\ standard\ deviation\ calculated\ by\ ProUCL = 1.615$

$p_n = the\ inverse\ of\ the\ cumulative\ distribution\ function\ at\ the\ 95th\ confidence\ level$
$= (1 - 0.95)^{\frac{1}{n}} = 0.965$
$= 1.812\ (inverse\ of\ cumulative\ distribution\ function\ of\ 0.965)$

$n = the\ number\ of\ valid\ data\ samples = 84$

In the case of chlorine:

RPM = 2.2935

The maximum projected effluent concentration is determined by multiplying the maximum reported effluent concentration by the RPM:

$$\text{MEC} = (\text{RPM}) \times (\text{MRC}) \quad \text{(Equation C-11)}$$

Where,

MRC = Maximum Reported Concentration

In the case of chlorine,

C_e = (2.2935)(2.07 mg/L) = 4.7475 or 4.75 mg/L (maximum projected effluent concentration)

Comparison with ambient criteria for chlorine

In order to determine if reasonable potential exists for this discharge to violate the ambient criteria, the highest projected concentrations at the boundary of the mixing zone are compared with the ambient criteria.

Acute	0.01302 mg/L > 0.013 mg/L (acute criteria)	**YES**, there is a reasonable potential to violate
Chronic:	0.00751 mg/L > 0.0075 mg/L (chronic criteria)	**YES**, there is a reasonable potential to violate

Since there is a reasonable potential for the effluent to cause an exceedance of chronic WQS for protection of aquatic life, a WQBEL for TRC is required. See Appendix D for that calculation.

Table 8 summarizes the data, multipliers, and criteria used to determine reasonable potential to exceed criteria at the end-of-pipe and boundary of the mixing zone.

Table 8. Reasonable Potential Determination

Parameter [a]	MRC	Number of Samples	Upstream Concentration (C_u)	Dilution Ratio (D)	RPM	MEC (C_e)	Maximum Projected Receiving Waterbody Concentration	Water Quality Criteria	Boundary of MZ RP?
Total Residual Chlorine (chronic)	2,070	84	0	633	2.3	4,751.85	7.51	7.5	Yes
Total Residual Chlorine (acute)	2,070	84	0	365	2.3	4,751.85	13.01	13	Yes
Total Ammonia as N (chronic)	401,560	318	180	633	1	401,560	810	1,200	No
Total Ammonia as N, (acute)	401,560	318	180	365	1	401,560	1,280	8,100	No
[a]All concentrations in micrograms per liter (µg/L)									

APPENDIX D. EFFLUENT LIMIT CALCULATION

If the Alaska Department of Environmental Conservation (the Department or DEC) does not authorize a mixing zone, water quality criteria are applied at the end-of-the-pipe, and technology-based effluent limits (TBELs) are selected for those parameters that are solely technology based. When DEC authorizes a mixing zone, parameters are identified in the mixing zone that will require dilution to meet water quality criteria. If there are TBELs for an identified parameter in the mixing zone, TBELs apply at the end-of-the-pipe and water quality criteria for that parameter applies at the boundary of the mixing zone. If the reasonable potential analysis (RPA) requires the development of water-quality based effluent limits (WQBELs) for specific parameters in order to protect aquatic life at the boundary of the mixing zone, WQBELs are applied as end-of-pipe effluent limits. Those parameters are not identified in the authorized mixing zone must meet applicable water quality criteria at the end-of-pipe. In the absence of water quality criteria for a particular pollutant—such as for 5-day biochemical oxygen demand and total suspended solids—TBELs are applied as end-of-pipe effluent limits.

In the case of Agrium Kenai Nitrogen Operations (KNO) wastewater treatment facility, total residual chlorine (TRC) demonstrated reasonable potential (RP) to exceed water quality criteria end-of-pipe and required the most dilution to meet water quality criteria at the boundary of the authorized mixing zone. Therefore, the Department developed WQBELs for TRC.

D.1 Effluent Limit Calculation

Once the Department determines that the effluent has a reasonable potential to exceed a water quality criterion, a WQBEL for the pollutant is developed. The Department used the process described in the *Technical Support Document (TSD) for Water Quality-Based Toxics Control* (Environmental Protection Agency, 1991) and DEC's guidance: *Alaska Pollutant Discharge Elimination System (APDES) Permits Reasonable Potential Analysis and Effluent Limits Development Guide* (June 30, 2014) to calculate WQBELs for TRC. The first step in calculating a permit limit is development of a waste load allocation (WLA) for the pollutant.

D.2 Mixing Zone-based WLA

When the Department authorizes a mixing zone for the discharge, the WLA is calculated using the available dilution, background concentrations of the pollutant, and the WQS. Since acute and chronic aquatic life standards apply over different time frames and have different mixing zones, it is not possible to compare the WLAs directly to determine which standard results in the most stringent limits. The acute criteria are applied as a one-hour average and has a smaller mixing zone, while the chronic criteria are applied as a four-day average and has a larger mixing zone. To allow for comparison, long-term average (LTA) loads are calculated from both the acute and chronic WLAs. The most stringent LTA is used to calculate the permit limits.

D.3 "End-of-Pipe" WLAs

In many cases, there is no dilution available, either because the receiving water body exceeds the criteria or because the Department does not authorize a mixing zone for a particular pollutant. When there is no dilution available, the criterion becomes the WLA. Establishing the criterion as the WLA ensures that the permittee's discharge does not contribute to an exceedance of the criterion. As with the mixing zone-

based WLA, the acute and chronic criteria must be converted to LTAs and compared to determine which one is more stringent. The more stringent LTA is then used to develop permit limits.

D.4 Permit Limit Derivation

Once the appropriate LTA has been calculated, the Department applies the statistical approach described in Chapter 5 of the *TSD* to calculate maximum daily and average monthly permit limits. This approach takes into account effluent variability [using the Coefficient Variation (CV)], sampling frequency, and the difference in time frames between the average monthly (AML) and maximum daily limits (MDL).

The MDL is based on the CV of the data and the probability basis, while the AML is dependent on these two variables and the monitoring frequency. As recommended in the *TSD*, the Department used a probability basis of 95 percent for AML calculation and 99 percent for the MDL calculation.

The following is a summary of the steps to derive WQBELs from water quality criteria for pollutants that have a reasonable potential to exceed WQS. These steps are found in the Department's *Alaska Pollutant Discharge Elimination System (APDES) Permits Reasonable Potential Analysis and Effluent Limits Development Guide* and the guidance's accompanying Excel Reasonable Potential Analysis Tool. The guidance and tool were used to calculate, RP, the MDL, and the AML for TRC in KNO's permit.

<u>Step 1- Determine the WLA</u>

The acute and chronic aquatic life criteria are converted to acute and chronic WLAs using the following equations:

$$WLA_{a,c} = C_u + \left[\left(WQC_{a,c} - C_u\right)D_{a,c}\right]$$

Where:

$D_{a,c} = Dilution\ (acute\ or\ chronic)$

$C_u = Critical\ upstream\ concentration$

$WLA_{a,c} = Wasteload\ allocation\ (acute\ or\ chronic)$

When C_u is zero, this equation becomes:

$$WLA_{a,c} = WQC_{a,c} \times D_{a,c}$$

For TRC:

$D_a = 365$

$D_c = 633$

$C_u = 0$

$WQC_a = 0.013\ {}^{mg}/_{L}$

$WQC_c = 0.0075\ {}^{mg}/_{L}$

$WLA_a = 4.75\ {}^{mg}/_{L}$

$WLA_c = 4.75\ {}^{mg}/_{L}$

Step 2 - Determine the Long-Term Average (LTA)

The WLAs are converted to LTAs using multipliers that are derived from equations in Section 5.4 of the *TSD*:

$$LTA_a = WLA_a \times \exp(0.5\sigma^2 - z_{99}\sigma)$$
$$LTA_c = WLA_c \times \exp(0.5\sigma_4^2 - z_{99}\sigma_4)$$

Where:

$\hat{\sigma}^2 = square\ of\ the\ logstandard\ deviation\ from\ ProUCL$

$CV = \sqrt{e^{\hat{\sigma}^2} - 1}$

$\sigma^2 = \ln(CV^2 + 1)$

$\sigma = \sqrt{\sigma^2}$

$\sigma_4^2 = \ln\left(\frac{CV^2}{4} + 1\right)$

$\sigma_4 = \sqrt{\sigma_4^2}$

$z_{99} = \ the\ z - statistic\ at\ the\ 99th\ percentile = 2.326$

For TRC:

$LTA_a = 408.49$

$LTA_c = 603.57$

Step 3 - Most Limiting LTA

To protect a water body from both acute and chronic effects, the more limiting of the two LTAs is used to derive the effluent limitations. In the case of TRC, the LTA_a is more limiting.

Step 4 - Calculate the Permit Limits

The MDL and the AML are calculated as follows:

$$MDL = LTA\ \times \exp(z_{99}\sigma - 0.5\sigma^2)$$

Where:

$z_{99} = \ the\ z - statistic\ at\ the\ 99th\ percentile = 2.326$

$\hat{\sigma}^2 = square\ of\ the\ logstandard\ deviation\ from\ ProUCL$

$CV = \sqrt{e^{\hat{\sigma}^2} - 1}$

$\sigma^2 = \ln(CV^2 + 1)$

$\sigma = \sqrt{\sigma^2}$

$$AML = LTA \times \exp(z_{95}\sigma_n - 0.5\sigma_n^2)$$

Where:

$$z_{95} = \text{ the } z - \text{statistic at the } 95th \text{ percentile} = 1.645$$

$$\hat{\sigma}^2 = \text{square of the logstandard deviation from ProUCL}$$

$$CV = \sqrt{e^{\hat{\sigma}^2} - 1}$$

$$\sigma_n^2 = ln\left(\frac{CV^2}{n} + 1\right)$$

$$\sigma_n = \sqrt{\sigma_n^2}$$

$$n = number\frac{samples}{month}(for\ TRC\ n = 4)$$

For TRC:

$$MDL = 4.75\frac{mg}{L}$$

$$AML = 1.43\frac{mg}{L}$$

APPENDIX E. MIXING ZONE ANALYSIS CHECKLIST

Mixing Zone Authorization Checklist

based on Alaska Water Quality Standards (2003)

The purpose of the Mixing Zone Checklist is to guide the permit writer through the mixing zone regulatory requirements to determine if all the mixing zone criteria at 18 AAC 70.240 through 18 AAC 70.270 are satisfied, as well as provide justification to authorize a mixing zone in an APDES permit. In order to authorize a mixing zone, all criteria must be met. The permit writer must document all conclusions in the permit Fact Sheet; however, if the permit writer determines that one criterion cannot be met, then a mixing zone is prohibited, and the permit writer need not include in the Fact Sheet the conclusions for when other criteria were met.

Criteria	Description	Resources	Regulation
Size	Is the mixing zone as small as practicable? **Yes**	•Technical Support Document for Water Quality Based Toxics Control •Fact Sheet, 5.5.1 • DEC's RPA Guidance • EPA Permit Writers' Manual	18 AAC 70.240 (a)(2) 18 AAC 70.245 (b)(1) - (b)(7) 18 AAC 70.255(e) (3) 18 AAC 70.255 (d)
Technology	Were the most effective technological and economical methods used to disperse, treat, remove, and reduce pollutants? **Yes**	•Fact Sheet, 5.5.2	18 AAC 70.240 (a)(3)
Existing use	Does the mixing zone…		

Criteria	Description	Resources	Regulation
	(1) partially or completely eliminate an existing use of the water body outside the mixing zone? **No** **If yes, mixing zone prohibited.**	•Fact Sheet, 5.5.3	18 AAC 70.245(a)(1)
	(2) impair overall biological integrity of the water body? **No** **If yes, mixing zone prohibited.**	•Fact Sheet, 5.5.3	18 AAC 70.245(a)(2)
	(3) provide for adequate flushing of the water body to ensure full protection of uses of the water body outside the proposed mixing zone? **Yes** **If no, then mixing zone prohibited.**	•Fact Sheet, 5.5.3	18 AAC 70.250(a)(3)
	(4) cause an environmental effect or damage to the ecosystem that the department considers to be so adverse that a mixing zone is not appropriate? **No** **If yes, then mixing zone prohibited.**	•Fact Sheet, 5.5.3	18 AAC 70.250(a)(4)
Human consumption	Does the mixing zone…		
	(1) produce objectionable color, taste, or odor in aquatic resources harvested for human consumption? **No** **If yes, mixing zone may be reduced in size or prohibited.**	•Fact Sheet, 5.5.4	18 AAC 70.250(b)(2)
	(2) preclude or limit established processing activities of commercial, sport, personal use, or subsistence shellfish harvesting? **No**	•Fact Sheet, 5.5.4	18 AAC 70.250(b)(3)

Criteria	Description	Resources	Regulation
	If yes, mixing zone may be reduced in size or prohibited.		
Spawning Areas	Does the mixing zone…		
	(1) discharge in a spawning area for anadromous fish or Arctic grayling, northern pike, rainbow trout, lake trout, brook trout, cutthroat trout, whitefish, sheefish, Arctic char (Dolly Varden), burbot, and landlocked coho, king, and sockeye salmon? **No** **If yes, mixing zone prohibited.**	•Fact Sheet, 5.5.5	18 AAC 70.255 (h)
Human Health	Does the mixing zone…		
	(1) contain bioaccumulating, bioconcentrating, or persistent chemical above natural or significantly adverse levels? **No** **If yes, mixing zone prohibited.**	•Fact Sheet, 5.5.6	18 AAC 70.250 (a)(1)
	(2) contain chemicals expected to cause carcinogenic, mutagenic, tetragenic, or otherwise harmful effects to human health? **No** **If yes, mixing zone prohibited.**	•Fact Sheet, 5.5.6	
	(3) Create a public health hazard through encroachment on water supply or through contact recreation? **No**	•Fact Sheet, 5.5.6	18 AAC 70.250(a)(1)(C)

Criteria	Description	Resources	Regulation
	If yes, mixing zone prohibited.		
	(4) meet human health and aquatic life quality criteria at the boundary of the mixing zone? **Yes** **If no, mixing zone prohibited.**	•Fact Sheet, 5.5.1	18 AAC 70.255 (b),(c)
	(5) occur in a location where the department determines that a public health hazard reasonably could be expected? **No** **If yes, mixing zone prohibited.**	•Fact Sheet, 5.5.6	18 AAC 70.255(e)(3)(B)
Aquatic Life	Does the mixing zone…		
	(1) create a significant adverse effect to anadromous, resident, or shellfish spawning or rearing? **No** **If yes, mixing zone prohibited.**	•Fact Sheet, 5.5.7	18 AAC 70.250(a)(2)(A-C)
	(2) form a barrier to migratory species? **No** **If yes, mixing zone prohibited.**	•Fact Sheet, 5.5.7	
	(3) fail to provide a zone of passage? **No** **If yes, mixing zone prohibited.**	•Fact Sheet, 5.5.7	
	(4) result in undesirable or nuisance aquatic life? **No** **If yes, mixing zone prohibited.**	•Fact Sheet, 5.5.7	18 AAC 70.250(b)(1)
	(5) result in permanent or irreparable displacement of indigenous organisms? **No** **If yes, mixing zone prohibited.**	•Fact Sheet, 5.5.7	18 AAC 70.255(g)(1)

Criteria	Description	Resources	Regulation
	(6) result in a reduction in fish or shellfish population levels? **No** **If yes, mixing zone prohibited.**	•Fact Sheet, 5.5.7	18 AAC 70.255(g)(2)
	(7) prevent lethality to passing organisms by reducing the size of the acute zone? **No** **If yes, mixing zone prohibited.**	•Fact Sheet, 5.5.7	18 AAC 70.255(b)(1)
	(8) cause a toxic effect in the water column, sediments, or biota outside the boundaries of the mixing zone? **No** **If yes, mixing zone prohibited.**	•Fact Sheet, 5.5.8	18 AAC 70.255(b)(2)
Endangered Species	Are there threatened or endangered species (T/E spp) at the location of the mixing zone?If yes, are there likely to be adverse effects to T/E spp based on comments received from USFWS or NOAA. **No** If yes, will conservation measures be included in the permit to avoid adverse effects? **Not applicable** **If yes, explain conservation measures in Fact Sheet. No** **If no, mixing zone prohibited.**	•Fact Sheet, 5.5.9	Program Description, 6.4.1 #5 18 AAC 70.250(a)(2)(D)