UniSea
15400 Northeast 90th Street, P.O. Box 97019, Redmond, WA 98073-9719 (425)881-8181 FAX (425)882-1660

March 3, 2016

Clynda A. Case
Alaska Department of Environmental Conservation
Division of Water
555 Cordova Street, 3rd Floor
Anchorage, Alaska 99501

SUBJECT: UNISEA'S SHORT-TERM WATER QUALITY VARIANCE APPLICATION FOR DISCHARGE OF DREDGED SEAFOOD RESIDUES IN UNALASKA BAY, ALASKA

Dear Ms. Case:

In response to your written correspondence dated February 9, 2016, UniSea is submitting the enclosed materials to serve as the formal application for a short-term Water Quality Variance (WQV) to authorize at-sea discharge of dredged material in outer Unalaska Bay. This application has been prepared to supplement the existing materials previously provided to ADEC and to address the provisions of Title 18, Chapter 70 of the Alaska Administrative Code (AAC).

Our response to ADEC's letter, including the items below, demonstrates that the remaining requirements of 18 AAC 70.200 have been fulfilled by the contents of this application, with particular consideration to each item included in your February letter. We believe that this application is complete, thereby starting the required 60-day period set forth in 18 AAC 15.020(b)(4). By submitting this document to ADEC on March 3, 2016, we are hopeful that UniSea will be able to begin the proposed activity by May 8, 2016. UniSea will continue to work collaboratively with ADEC throughout this period, and will ensure that all requests related to this application are satisfied in a timely manner.

FULFILLMENT OF THE REMAINING REQUIREMENTS OF 18 AAC 70.200

The State of Alaska's requirements for the application and issuance of a short-term WQV are listed below in **bold** text, immediately followed by the specific requests from your February letter. Also included in this section is a summary of how these regulatory requirements have been fulfilled by UniSea, and where to find additional information in the attached application. UniSea's responses are *indented* and *italicized* for easy reference.

18 AAC 70.200 (a)(2): In its discretion, the department will grant a short-term variance from the anti-degradation policy standard or the water quality criteria for a temporary activity associated with the placement of dredged or fill material affecting a specific waterbody.

ADEC Request: WRP Table 5.1, Schedule for the Remedial Action Work Elements projects indicates that the waste pile removal activity will take approximately four weeks during the

summer of 2016 and that all field work be completed in 270 days. Please update the event schedule to reflect the actual numbers of days anticipated for the discharge activity.

> *An updated schedule of project work elements is provided as a Current Project Schedule in Attachment 1. This temporary activity, for which UniSea is applying for a variance from state water quality criteria, will occur over a 4- to 5-week period in summer 2016. The anticipated frequency of discharge is, on average, approximately one discharge event per two calendar days throughout construction. The project schedule and frequency of discharge may vary based on rate of production, extreme weather patterns, adjustment of best management practices (BMPs), and other unforeseen circumstances. However, the at-sea discharge of dredged material will remain a temporary and intermittent activity.*

18 AAC 70.200(b)(1) & (2): The department will grant a short-term variance only if an applicant shows to the department's satisfaction that wastes or substances that might adversely affect water quality are controlled, using methods the department finds most effective; and, the activity will be conducted in a manner to mitigate water quality impacts, using methods the department finds most effective.

ADEC Request: The WRP proposes to use a filtration system to dewater the dredged waste(s) and prevent any overboard spillage during the dredging activity. Specifically, the WRP proposes using fabricated gates to contain the larger seafood waste materials, fabric mesh with large sized holes will not prevent the waste(s) from washing off the barge deck and back into the work area and creating additional turbidity. Additionally, the WRP proposes the use of a geotextile fabric to filter to contain smaller particles, but the WRP does not identify the geotextile fabric mesh size. UniSea should provide an analysis and implementation strategies in the WRP to control increased turbidity from known small settable solid particle size (0.15) during dredging, mitigating water quality impacts during dredging.

> *Presented in Attachment 2 is a Dredged Material Dewatering Analysis and Approach, which describes the BMPs and other techniques that will be used to dewater the dredged material and minimize the associated turbidity and water quality effects during dewatering. The geotextile fabric filter size (0.15 millimeters [mm]) that has been requested by ADEC will be installed on the dredge barge prior to the commencement of the activity, and will be monitored and adjusted for efficacy as needed.*

18 AAC 70.200(b)(3): The department will grant a short-term variance only if an applicant shows to the department's satisfaction that the activity, when completed, will not cause long-term, chronic, or recurring violation of the water quality standards.

ADEC Request: The WRP proposed that a Water Quality Protection and Monitoring Plan (WQP&MP) could be developed for the proposed dredge waste discharge site as needed based on agency coordination. ADEC is requesting UniSea submit a WQP&MP with their WQV application in order for the Department to evaluate that the discharge will not causing long term, chronic or reoccurring water quality standard violations.

A Water Quality Protection and Monitoring Plan (WQP&MP) has been developed for this project and is included in this application as Attachment 3. The WQP&MP describes the sampling that would occur at the discharge site, with pre-discharge samples collected in order to establish a baseline and a post-discharge sampling event conducted to demonstrate that the discharge has not caused long-term, chronic, or recurring water quality standard violations.

18 AAC 70.200(d)(3): A person seeking a short-term variance shall submit a written request, which must state the real extent and quantified degree of variance from the applicable criteria.

ADEC Request: The extent and quantified degree of variance from water quality standards needs to be addressed in the WQV application for the At-sea dredge waste discharge area. Currently, the proposed WRP Appendix A identifies a large discharge area. Proposed vessel tracks in this large area should be identified by UniSea.

In coordination with the project Contractor (Orion Marine Contractors, Inc.), proposed vessel track lines have been included in the WQP&MP, located in Attachment 3, to document the potential extent of water quality impacts at the discharge site. Potential water quality impacts at the discharge site will be minimized through implementation of a suite of BMPs, which are described in Appendix A of Attachment 3. The WQP&MP also describes the water quality sampling that will occur along these vessel track lines to provide a quantified degree of variance from the applicable water quality criteria.

18 AAC 70.200 (b)(3) & (d)(5): The department will grant a short-term variance only if an applicant shows to the department's satisfaction that the activity, when completed, will not cause long-term, chronic, or recurring violation of the water quality standards. A person seeking a short-term variance shall submit a written request, which must state the activity's estimated impact on the uses of the water involved, including recreation and use for habitat, rearing, growth, or migration by fish, shellfish, other aquatic life, and wildlife.

ADEC Request: UniSea should develop a robust Quality Assurance Project Plan (QAPP) and Sampling Plan for the proposed seafood waste discharge activity in order to ensure the proposal will not cause long-term, chronic or reoccurring water quality violations. Additionally; further information should be included in the WRP that estimates the impacts from the dredging and disposal activity on the uses of the water involved including recreation and use for habitat, rearing, growth, or migration by fish, shellfish, other aquatic life, and wildlife.

Located in Appendix B of Attachment 3 is UniSea's written documentation of the estimated impact of dredging and discharging the dredged material will have on water uses at the discharge site and dredge area, including recreation and use for habitat, rearing, growth, or migration. This project-specific analysis demonstrates that the proposed activity is not expected to cause long-term, chronic, or recurring violation of state water quality standards. Further, the sampling procedures that will be used to collect water quality samples at the discharge site to confirm this assumption, and analytical methods that will be used to ensure data quality, are described in the Quality

Assurance Project Plan and Sampling and Analysis Plan provided in Appendix C of Attachment 3.

Additional ADEC Request: The WRP reports that accumulation of the seafood waste is not expected to be concentrated in any one area as it is being discharged. But it is possible that solids residues will have impact areas on the seafloor. UniSea should develop a pre-discharge seafloor survey plan and post-discharge seafloor survey plan and submit with the WQV application.

In compliance with the request from ADEC, UniSea has prepared a Pre- and Post-Discharge Seafloor Survey Plan, which is provided in Attachment 4. The pre-discharge seafloor survey will provide information on the baseline benthic habitat conditions at the discharge site, and the post-discharge seafloor survey will assess benthic habitat conditions after discharge of dredged material, and deposition, if any. Based on the previously commissioned current assessment at this location in outer Unalaska Bay, which was included in the WRP, UniSea does not anticipate an adverse impact to the benthic community from the discharge activity, but will nonetheless complete the survey and provide results to ADEC within the timeframe outlined in the survey plan.

Please let us know once you have reviewed this application for completeness and if any additional information is needed to assist in your final determination. We look forward to working with ADEC to permit this project successfully.

Sincerely yours,

Mr. Tom Enlow
President and CEO

Encl.: Attachment 1 Current Project Schedule
Attachment 2 Dredged Material Dewatering Analysis and Approach
Attachment 3 Water Quality Protection and Monitoring Plan
Attachment 4 Pre- and Post-Discharge Seafloor Survey Plan

Copies: Gregg Bishop (gregg.bishop@unisea.com), Jessi Massingale (jessi.massingale@floydsnider.com; UniSea CD Dredging Consultant), Robert Grandinetti (Grandinetti.Robert@epa.gov; EPA Office of Compliance and Enforcement)

Attachment 1
Current Project Schedule

Table 5.1
Schedule for the Project Work Elements[1]
(updated from Final Waste Remediation Plan with Contractor input)

Work Elements	Activity Duration and/or Required Timing
USEPA Pre-Construction Submittals (Completed in 2015)	
Submittal of Proposed Seafood Waste Disposal Location Document to USEPA	July 27, 2015
Submittal of Draft WRP to USEPA	By August 24, 2015
Submittal of Final WRP to USEPA[2]	By November 18, 2015, within 30 days of receipt of USEPA comments on Draft WRP (October 19, 2015)
Pre-Construction and Construction Items	
Pre-dredge SPI benthic assessment survey	April 2016, prior to the start of dredging
Contractor mobilization, pre-dredge multi-beam hydrographic and dive surveys[3]	Planned for May 3, 2016
Instrumented water quality sampling at the at-sea disposal site	No more than 72 hours prior to the first disposal event; and no more than 24 hours after the last disposal event
Seafood waste dredging, dewatering, intermediate diver or ROV and multi-beam hydrographic surveys, and at-sea disposal	May 8, 2016 start date, with an expected duration of approximately 4 to 5 weeks in summer 2016
Frequency of at-sea disposal	An average of once every 2 days during dredging[4]
Post-dredge multi-beam hydrographic survey	Immediately following completion of dredging
Contractor demobilization	Following confirmation of seafood waste removal by multi-beam hydrographic survey
Post-dredge baseline SPI benthic assessment survey	Within 30 days of the completion of all dredging (initial and any required high spot additional dredging)
Post-dredge dive survey[3]	After September 15, 2016[2]
Post-Construction USEPA Submittals	
Submittal of Draft WRCR	Due within 60 days of the completion of field work
Submittal of Final WRCR	Due within 45 days of receipt of USEPA comment on the Draft WRCR

Notes:

1 Source: Floyd|Snider. 2015. Final Waste Remediation Plan. Prepared for UniSea, Inc. 16 November.

2 The CD states, "Within fifteen (15) Days of receipt of EPA's written approval of the final Waste Remediation Plan Defendant shall commence work in accordance with the EPA-approval final Waste Remediation Plan." Following USEPA's approval of the final WRP in November 2015, UniSea continued contractor and agency coordination to be able to complete the seafood waste removal and disposal actions in the summer of 2016; however, due to local weather conditions and coordination with regulatory agencies, the removal action cannot occur until the summer of 2016, consistent with USEPA's direction in an April 27, 2015 letter to John Iani of Perkins Coie regarding the *United States and State of Alaska v. UniSea Inc. Civil Action No. 3:11-ev-00037-JWS*.

3 The timing of the pre- and post-dredge dive surveys is dependent on water conditions conducive to survey visibility and is described in Section 5.4 of the WRP.

4 The frequency of at-sea disposal shown is an estimated average and is dependent on the dredge production rate and seafood waste material type and thickness, which is expected to vary during dredging.

Attachment 2
Dredged Material Dewatering
Analysis and Approach

Dredge Material Dewatering Analysis and Approach

Per the written correspondence from Ms. Clynda A. Case of the Alaska Department of Environmental Conservation (ADEC) to Mr. Tom Enlow of UniSea, Inc. (UniSea), dated February 9, 2016, to fulfill Alaska Administrative Code (AAC) Title 18, Chapter 70, Section 200(b)(1) and (2) "UniSea should provide an analysis and implementation strategies in the WRP to control increased turbidity from known small settable solid particle size (0.15) during dredging, mitigating water quality impacts during dredging." This Dredge Material Dewatering Analysis and Approach describes the proposed approach to dewatering the dredged seafood waste within the dredge area resulting from an analysis of dewatering options. The approach was developed consistent with the Waste Remediation Plan (WRP), and in coordination with the marine contractor selected to perform the waste removal action (Orion Marine Group, Inc.) to effectively dewater the dredged material to safely transport the waste to the at-sea disposal area while minimizing the impacts to water quality during dredging and comply with the requirements of the Water Quality Variance.

GEOTEXTILE FABRIC SELECTED FOR DEWATERING

Included in this Dredge Material Dewatering Analysis and Approach is a product information sheet for the geotextile fabric selected to be used for the filtering (dewatering) of the dredged seafood waste prior to disposal, TenCate Mirafi® 1160N. This fabric is a needlepunched nonwoven geotextile composed of polypropylene fibers. The apparent opening size, as indicated on the project information sheet, is 0.15 millimeters (mm). This geotextile fabric is readily available and has been selected by the marine contractor in order to filter dredge material particles to approximately 0.15 mm to the extent feasible.

DEWATERING SYSTEM CONFIGURATION

As described in the WRP, dredged seafood waste will be mechanically dredged with the use of a clamshell bucket. The amount of water retained in each bucket will be a function of the composition of the seafood waste in a given area of the dredge prism, and also the depth of the dredge cut. The dredged material and retained water will be emptied from the bucket directly into a disposal barge.

The Barge Layout Plan included in this Dredge Material Dewatering Analysis and Approach shows a conceptual barge and dewatering configuration. This configuration may be further refined during project planning efforts to optimize efficiency of the dredge operation. In this layout, dredge material will be placed within the "main deck" area shown on the plan to the right of the dredge derrick and temporary bulkhead. As noted on the Barge Layout Plan, a temporary steel bulkhead will be constructed to enclose the dredge material and geotextile fabric rolls will be mounted to the bulkhead on stretched metal with approximate 6-inch openings for dredge material filtration and dewatering prior to transit and disposal. Page 2 of the Barge Layout Plan shows the orientation of the geotextile rolls mounted on a structural steel frame for deployment. The seafood waste is expected to be present along the barge deck bottom with overlying water

and suspended material contacting the geotextile and metal backing. The planned volume of dredged waste to be loaded on each disposal barge for each trip to the disposal area is much less than the maximum barge capacity. The geotextile rolls will be installed across the full 54-foot-wide opening to allow for larger volumes of flows and maximize filtration surface area, and prevent instability during barge transit. The filtered water will exit the barge through the geotextile fabric and drain to the opening located to the right of the derrick along the bulkhead, and to the north and south of the derrick and crane mats shown on the plan.

When the water filtration flow rate becomes reduced due to clogging, the geotextile fabric will either be brushed off or hosed down for fabric replacement. Once the remaining water on the barge has been filtered and the dredge material discharged within the Seafood Waste Disposal Location, as described in Attachment 3 of this Water Quality Variance Application, the 15-foot-wide rolls will be drawn out to position a clean geotextile surface for the next load of material to be dredged. If clogging occurs significantly faster than expected, or throughout a larger portion of the drainage area, field adjustments to the dewatering system will be made to maintain barge stability and safety during transit. This could consist of more frequent brushing and hosing down of the geotextile fabric, or exchange of the geotextile fabric if needed.

TENCATE
Mirafi®

Drainage Separation

Mirafi® 1160N

Mirafi® 1160N is a needlepunched nonwoven geotextile composed of polypropylene fibers, which are formed into a stable network such that the fibers retain their relative position. Mirafi® 1160N is inert to biological degradation and resists naturally encountered chemicals, alkalis, and acids.

Mechanical Properties	Test Method	Unit	Minimum Average Roll Value	
			MD	CD
Grab Tensile Strength	ASTM D4632	N (lbs)	1691 (380)	1691 (380)
Grab Tensile Elongation	ASTM D4632	%	50	50
Trapezoid Tear Strength	ASTM D4533	N (lbs)	623 (140)	623 (140)
CBR Puncture Strength	ASTM D6241	N (lbs)	4561 (1025)	
Apparent Opening Size (AOS)[1]	ASTM D4751	mm (U.S. Sieve)	0.15 (100)	
Permittivity	ASTM D4491	sec^{-1}	0.7	
Flow Rate	ASTM D4491	$l/min/m^2$ ($gal/min/ft^2$)	2037 (50)	
UV Resistance (at 500 hours)	ASTM D4355	% strength retained	70	

[1] ASTM D 4751: AOS is a Maximum Opening Diameter Value

Physical Properties	Test Method	Unit	Typical Value
Weight	ASTM D5261	g/m^2 (oz/yd^2)	441 (13)
Thickness	ASTM D5199	mm (mils)	3.0 (118)
Roll Dimensions (width x length)	--	m (ft)	4.5 x 46 (15 x 150)
Roll Area	--	m^2 (yd^2)	209 (250)
Estimated Roll Weight	--	kg (lb)	93 (205)

Disclaimer: TenCate assumes no liability for the accuracy or completeness of this information or for the ultimate use by the purchaser. TenCate disclaims any and all express, implied, or statutory standards, warranties or guarantees, including without limitation any implied warranty as to merchantability or fitness for a particular purpose or arising from a course of dealing or usage of trade as to any equipment, materials, or information furnished herewith. This document should not be construed as engineering advice.

© 2011 TenCate Geosynthetics North America
Mirafi® is a registered trademark of Nicolon Corporation

Made in USA

TENCATE™
materials that make a difference

FGS000353
ETQR26

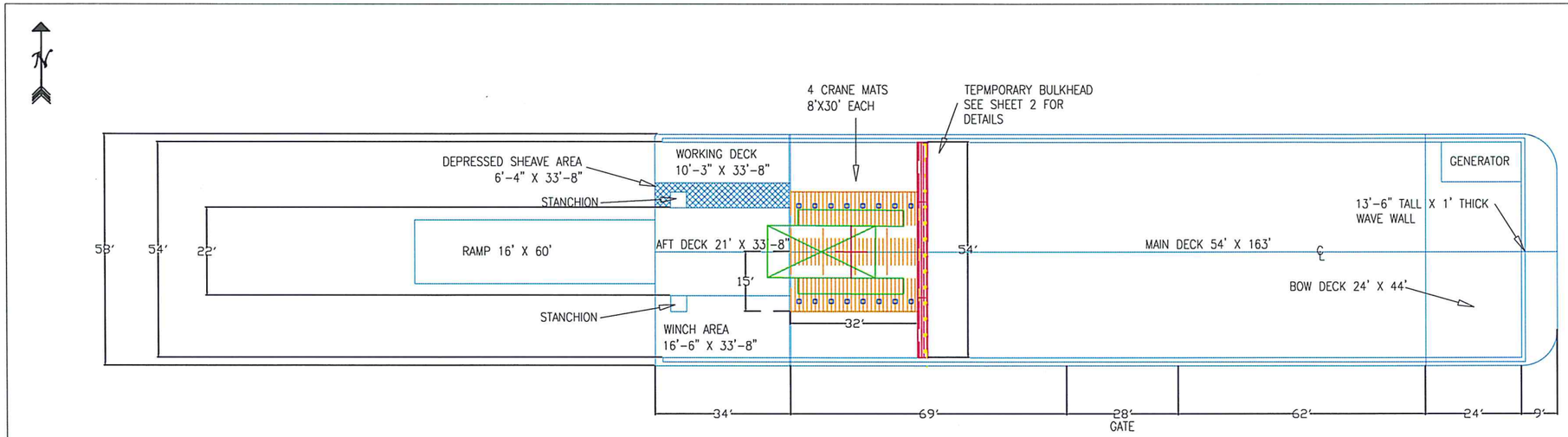

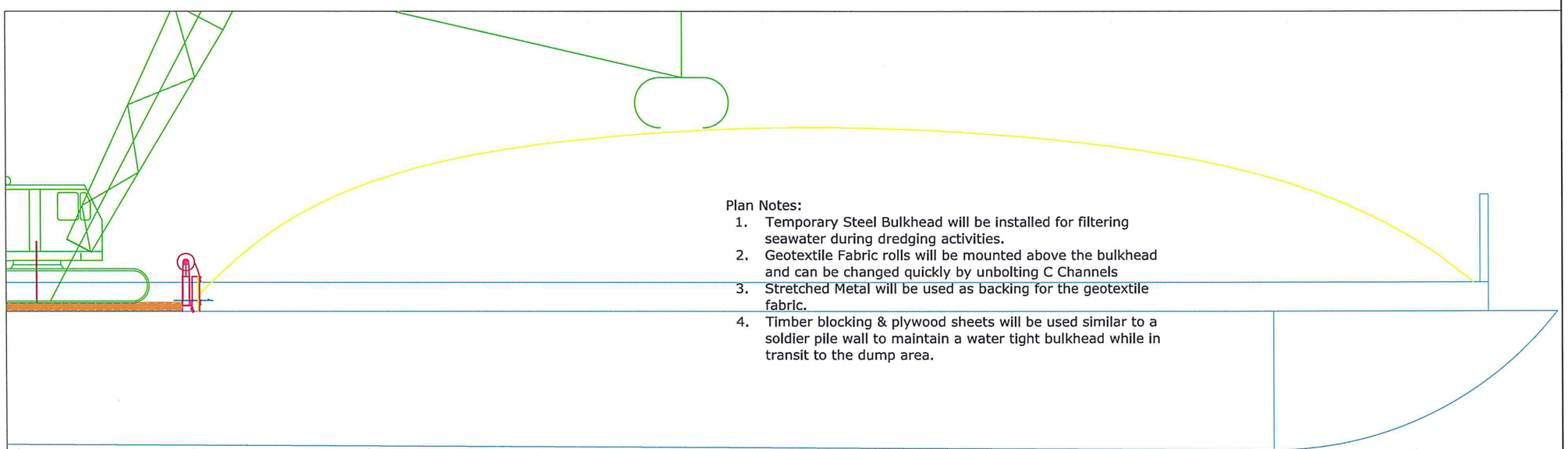

Plan Notes:

1. Temporary Steel Bulkhead will be installed for filtering seawater during dredging activities.
2. Geotextile Fabric rolls will be mounted above the bulkhead and can be changed quickly by unbolting C Channels
3. Stretched Metal will be used as backing for the geotextile fabric.
4. Timber blocking & plywood sheets will be used similar to a soldier pile wall to maintain a water tight bulkhead while in transit to the dump area.

Project Owner and Address

UNISEA INC
PO BOX 920008
Dutch Harbor, AK 99692

Design drawings and calculations are intended for the sole use of this project. Orion Marine Group provides construction engineering services for their own construction purposes and does not provide consulting engineering services. Reuse of this design is not permitted unless written permission is granted by Orion Marine Group and the Engineer of Record.

Drawn By:	JAP
Designed By:	JAP
Checked By:	JAP

Submittal

BARGE LAYOUT PLAN

Date	02/15/16
Scale	NTS

ORION MARINE GROUP
740 Bonanza Ave
Anchorage, AK 99518
Phone: 907-561-9811
Fax: 907-561-9844
www.orionmarinegroup.com

Sheet Title

OLSON MARINE'S SPRUCE BARGE

No.	Revision/Issue	Date

Sheet

1 of 2

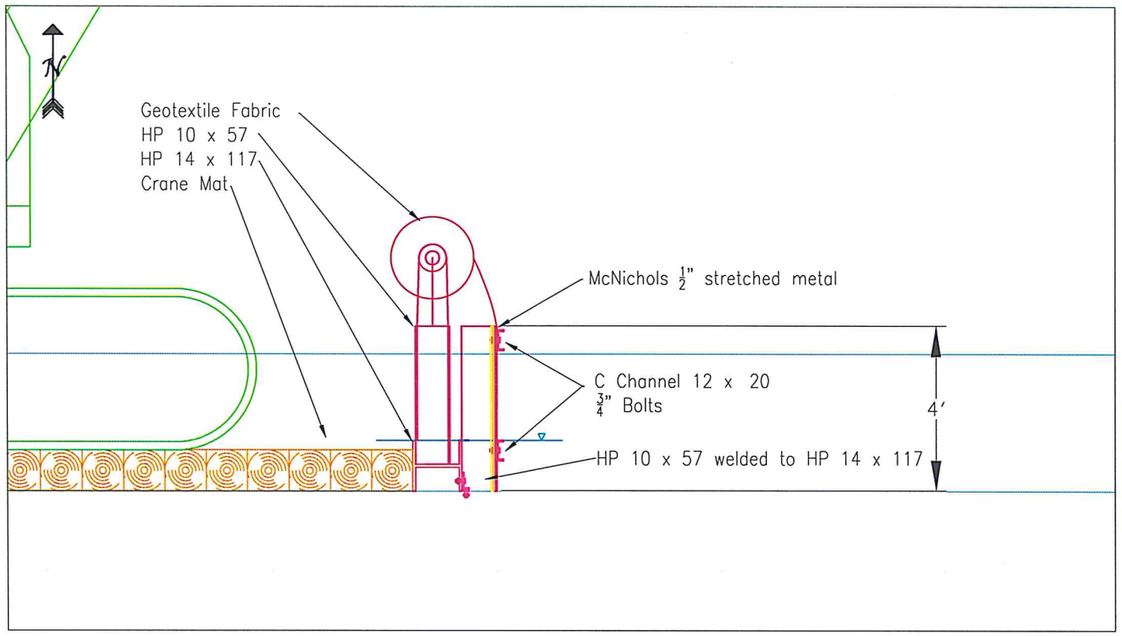

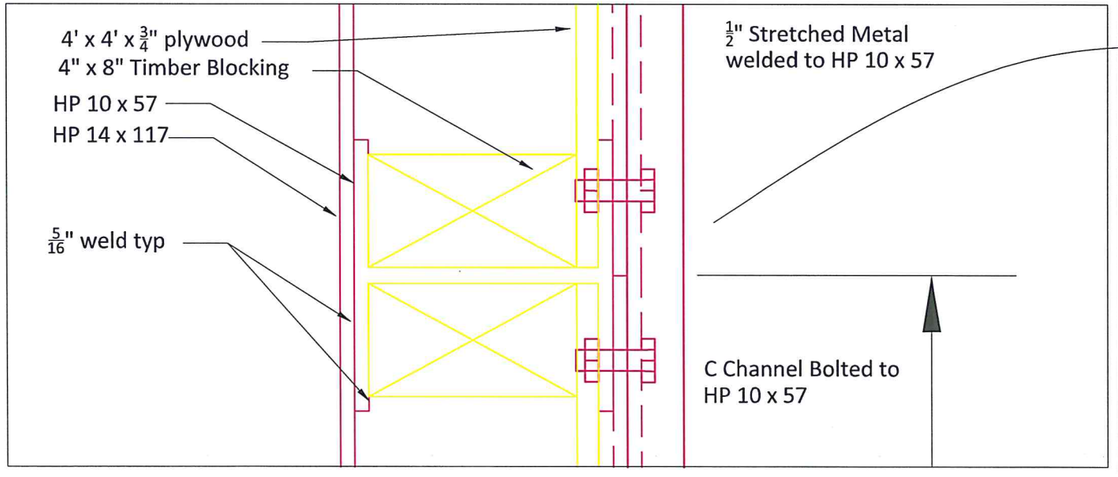

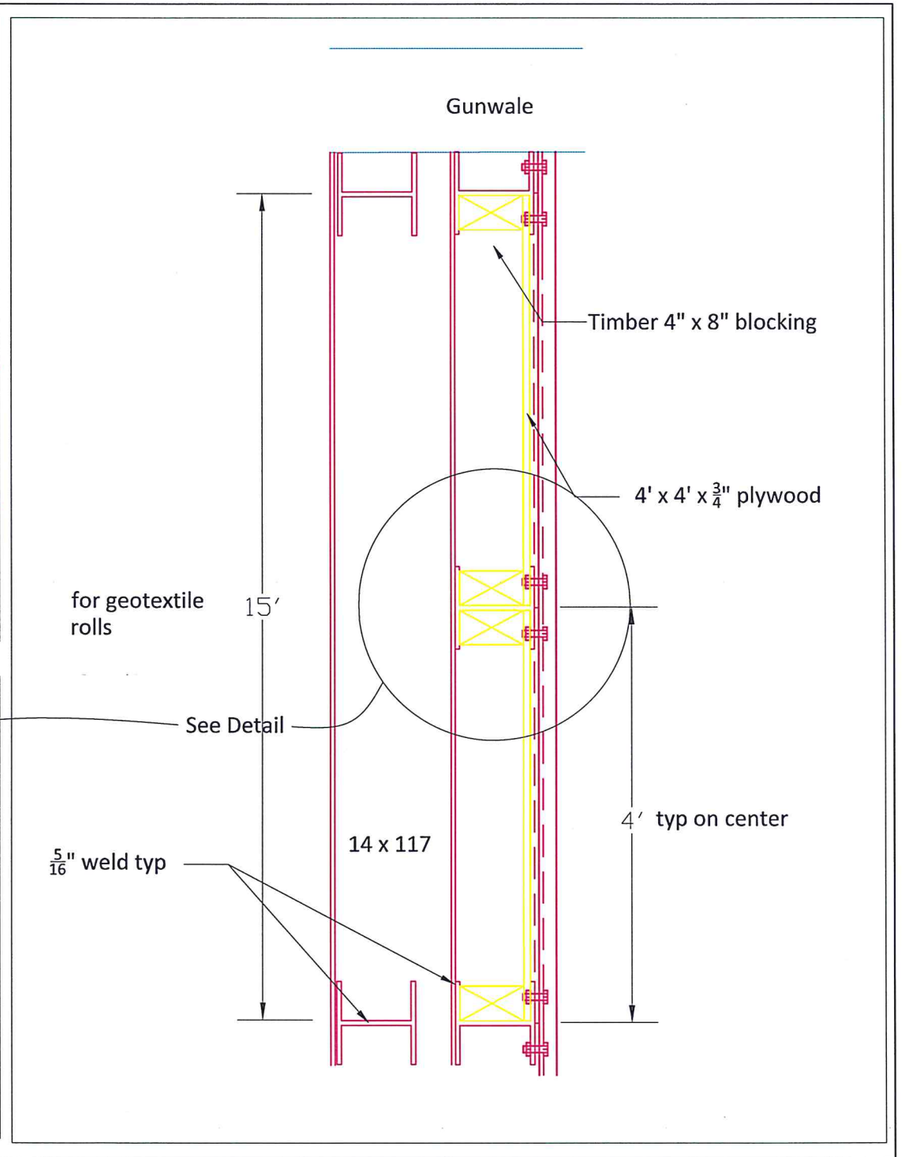

Project Owner and Address

UNISEA INC
PO BOX 920008
Dutch Harbor, AK 99692

Design drawings and calculations are intended for the sole use of this project. Orion Marine Group provides construction engineering services for their own construction purposes and does not provide consulting engineering services. Reuse of this design is not permitted unless written permission is granted by Orion Marine Group and the Engineer of Record.

Drawn By:	JAP
Designed By:	JAP
Checked By:	JAP

Submittal

BARGE LAYOUT PLAN

Date	02/15/16
Scale	NTS

ORION MARINE GROUP
740 Bonanza Ave
Anchorage, AK 99518
Phone: 907-561-9811
Fax: 907-561-9844
www.orionmarinegroup.com

Sheet Title

OLSON MARINE'S SPRUCE BARGE

No.	Revision/Issue	Date

Sheet

2 of 2

Attachment 3
Water Quality Protection and Monitoring Plan

UniSea, Inc.

Water Quality Protection and Monitoring Plan

Prepared for

UniSea, Inc.
Dutch Harbor Facility
P.O. Box 92008
Dutch Harbor, Alaska 99692

Submitted to

Alaska Department of Environmental Conservation
Division of Water
555 Cordova Street, 3rd Floor
Anchorage, Alaska 99501

March 2016

FLOYD | SNIDER
strategy ▪ science ▪ engineering
Two Union Square • 601 Union Street • Suite 600
Seattle, Washington 98101 • tel: 206.292.2078

LIMITATIONS

This report has been prepared for the exclusive use of UniSea, Inc., their authorized agents, and regulatory agencies. It has been prepared following the described methods and information available at the time of the work. No other party should use this report for any purpose other than that originally intended, unless Floyd|Snider agrees in advance to such reliance in writing. The information contained herein should not be utilized for any purpose or project except the one originally intended. Under no circumstances shall this document be altered, updated, or revised without written authorization of Floyd|Snider.

Table of Contents

1.0 Introduction 1-1

1.1 PROJECT DESCRIPTION 1-1

1.2 WATER QUALITY STANDARDS 1-2

2.0 Water Quality Monitoring Plan 2-1

2.1 VISUAL MONITORING 2-1

2.2 INSTRUMENTED MONITORING 2-1

2.3 CHEMICAL MONITORING 2-2

2.4 MONITORING SCHEDULE AND LOCATIONS 2-2

3.0 Notification Plan 3-1

4.0 Documentation and Reporting 4-1

5.0 References 5-1

List of Tables

Table 1.1 Water Quality Parameters, Sampling Requirements, Criteria, and Applicable Water Uses

List of Figures

Figure 1.1 Vicinity Map

Figure 1.2 At-Sea Disposal Site and Contractor Anticipated Vessel Track Lines

List of Appendices

Appendix A Best Management Practices to Minimize Impacts to Water Quality

Appendix B Assessment of Impacts to the Uses of Water from the UniSea Dredging and Disposal Activity

Appendix C Quality Assurance Project Plan and Sampling and Analysis Plan

Appendix D Sea Surface Visual Monitoring Log and Water Quality Monitoring Form

List of Acronyms and Abbreviations

Acronym/ Abbreviation	Definition
ADEC	Alaska Department of Environmental Conservation
BIS	Benthic Impact Survey
BMP	Best management practice
BOD	Biological oxygen demand
CD	Consent Decree
DO	Dissolved oxygen
NPDES	National Pollutant Discharge Elimination System
Orion	Orion Marine Group, Inc.
TSS	Total suspended solids
UniSea	UniSea, Inc.
USEPA	U.S. Environmental Protection Agency
WQP&MP	Water Quality Protection and Monitoring Plan
WQV	Water Quality Variance
WRCR	Waste Remediation Completion Report
WRP	Waste Remediation Plan

1.0 Introduction

This Water Quality Protection and Monitoring Plan (WQP&MP) has been prepared on behalf of UniSea, Inc. (UniSea) and identifies monitoring, sampling, and best management practices (BMPs) for the discharge of seafood waste that has accumulated on the seafloor as a result of the permitted discharges from the UniSea seafood processing plant, which is being dredged at the direction of the U.S. Environmental Protection Agency (USEPA). The plant is located on the southwest shore of Amaknak Island (Figure 1.1). The at-sea disposal site is located approximately 5 nautical miles from the UniSea facility and approximately 1.2 nautical miles from shore (Figure 1.2).

The WQP&MP has been prepared as an integral component of the Water Quality Variance (WQV) Application. The WQP&MP includes water quality protection measures; monitoring parameters, methods, and evaluation criteria; and contingency response and notification procedures in order to demonstrate that the discharge of seafood waste will not cause long-term, chronic, or reoccurring water quality standard violations. The marine contractor, Orion Marine Group, Inc. (Orion), who has been selected to perform the construction activities will be subject to the requirements and procedures specified in this plan, as well as the contract specifications and other regulatory permits.

1.1 PROJECT DESCRIPTION

UniSea operates a seafood processing plant located in the city of Unalaska, Alaska (also referred to as Dutch Harbor; Figure 1.1). The UniSea facility is permitted to discharge wastewater, solids, and residues from the processing of seafood and related support activities from their seafood processing plants through their permitted outfalls in accordance with National Pollutant Discharge Elimination System (NPDES) Permit #AK-002865-7 (USEPA 2003). Authorized discharges from the UniSea facility have resulted in the formation of a seafood waste extent within a small embayment on the southwest shore of Amaknak Island (hereafter referred to as the Site; Figure 1.1).

On May 26, 2011, UniSea entered a Consent Decree (CD) with the USEPA and the State of Alaska (USEPA 2011). This CD required UniSea to perform a Benthic Impact Survey (BIS) at the Site, and, depending on the outcome of the BIS, potentially prepare a Waste Remediation Plan (WRP). The BIS was completed by UniSea in June 2012 (RPS and NewFields 2014). Based on the results, a zone of deposit was identified, described as the extent of the seafood waste distribution at the Site. Additionally, a zone of impact was defined, described as the portion of the seafood waste extent area with impacts to the benthic habitat due to the presence of the seafood waste. Data collected as part of this effort suggested that the size of the seafood waste extent has remained relatively constant, or is nominally decreasing over time. The survey also indicated that, while the benthic ecosystem at the Site is impacted, it is still functional.

As a follow up to the BIS, UniSea proposed that an Alternatives Analysis be conducted in coordination with USEPA to evaluate both potential dredge methodologies and alternatives to

dredging to address the identified areas of benthic impact at the Site prior to the preparation of the WRP. The *Seafood Waste Pile Alternatives Analysis* was submitted by UniSea to USEPA in October 2014 (Floyd|Snider 2014).

In response to the Alternatives Analysis, USEPA directed UniSea, via a letter dated April 27, 2015 (USEPA 2015), to dredge the seafood processing waste located on the seafloor at the Site in accordance with Paragraph 15 of the CD, which states that, "EPA shall review and assess the Benthic Impact Survey and EPA shall thereafter notify Defendant in writing whether Defendant will be required to remove all, some percentage by volume, or none of the seafood processing waste located on the seafloor at UniSea's Dutch Harbor discharge locations. The seafood waste pile debris shall be dewatered and sent to UniSea's Discharge Location 004 or disposed of as an at-sea disposal site per Section I.D. of UniSea's NPDES permit." The UniSea operational stick water is currently disposed at the at-sea Discharge Location 004 in outer Unalaska Bay during "B" season. Stick water is the wastewater resulting from the process of rendering fish waste to produce fishmeal and fish oil. ADEC and USEPA indicated that Discharge Location 004 could not be used for discharge of the dredged seafood waste. Therefore, as part of the WRP a current assessment and evaluation was conducted that identified a proposed alternative location for the at-sea disposal of seafood waste within outer Unalaska Bay, which is shown on Figure 1.2.

This WQP&MP contains the BMPs that will be employed to minimize impacts to water quality during the transport and discharge of seafood waste (Appendix A); potential impacts to water quality affecting habitat and aquatic species from discharge (Appendix B); and a Quality Assurance Project Plan (QAPP) and Sampling and Analysis Plan (SAP) that describes the sampling and analytical procedures that will be followed as well as the parameters that will be evaluated via water quality sampling for comparison to water quality criteria as required by ADEC (Appendix C).

1.2 WATER QUALITY STANDARDS

The water quality monitoring parameters that are applicable to this project, as identified in the ADEC February 9, 2016 letter (ADEC 2016), are as follows, and are shown in Table 1.1:

- Biological oxygen demand (BOD; 5-day test)
- Total suspended solids (TSS)
- Temperature
- Salinity
- Alkalinity
- Ammonia (total nitrogen)
- Total sulfides and total sulfates[1]
- Dissolved oxygen (DO)
- pH
- Turbidity

These parameters will be sampled according to the schedule described in Section 2.4, as put forth in the February 2016 letter and discussed on a subsequent conference call with ADEC on February 17, 2016. Two instrumented monitoring events will occur as part of construction, with

[1] Total sulfides and total sulfates will be analyzed instead of hydrogen sulfides, per coordination with ADEC on February 22, 2016, and March 15, 2016.

pre-discharge water quality samples collected no more than 72 hours prior to the first seafood waste disposal event and post-discharge water quality samples collected no more than 24 hours after the last day of discharge. The sample results collected pre-discharge will represent the background conditions prior to discharge and will serve as the naturally occurring conditions for comparison to water quality criteria applied to the post-discharge results.

For all the sampling parameters, except for BOD, TSS, and alkalinity, water quality criteria are found in the Alaska Administrative Code Title 18, Chapter 70, Section 020 and the 2008 *Alaska Water Quality Criteria Manual for Toxic and Other Deleterious Organic and Inorganic Substances* (ADEC 2008). These criteria, in combination with the class of water use, constitute the water quality standards for a particular waterbody. For the at-sea disposal site, the applicable water uses are "Water recreation (secondary recreation)" and "Growth and propagation of fish, shellfish, other aquatic life, and wildlife." The sampling frequency and type, water quality criteria, and applicable water use for each parameter are presented in Table 1.1.

Following the post-discharge sample collection event, the post-discharge sample results for these parameters will be tabulated and compared against the pre-discharge (naturally occurring conditions) and the ADEC marine water quality criteria presented in Table 1.1. The data tables will be submitted to ADEC as described in Section 4.0.

2.0 Water Quality Monitoring Plan

The objective of water quality monitoring is to document that the disposal of seafood waste at the at-sea disposal site does not cause long-term, chronic, or reoccurring water quality standard violations along the vessel discharge tracks within the at-sea disposal site (Figure 1.2). Additionally, visual monitoring will be conducted to ensure seafood waste is contained during transit to the at-sea disposal site. A combination of instrumented, visual, and chemical monitoring is proposed for this project.

The vessel used for sampling is anticipated to be a 28-foot-long UniSea-provided boat that is equipped and weighted for water quality sampling.

2.1 VISUAL MONITORING

All equipment operators and field staff will conduct visual surveys periodically while the vessel is underway to the at-sea disposal site to ensure seafood waste and wastewater do not leak from the disposal barge. If seafood waste is observed to leak out of the barge, Orion will immediately modify the barge dewatering system configuration and procedures, as needed, to prevent additional release of material and minimize turbidity.

In addition to visual observations done while underway, and as described in the WRP (Floyd|Snider 2015), in accordance with the CD, the following monitoring will be conducted during the disposal of the dredged seafood waste at the at-sea disposal site:

- The volume of each load of seafood waste dredged material will be estimated by Orion and documented in the project log by the construction oversight field personnel.
- The date, time of day, and start and stop positions of the disposal location will be recorded for each disposal barge load.
- During seafood waste disposal, presence of sea life, weather conditions, tide cycles, and pertinent visual observations will be recorded.

2.2 INSTRUMENTED MONITORING

As part of the pre- and post-discharge events, instrumented monitoring will be conducted using a multi-parameter water quality meter that will measure the following parameters according to the schedule and at the locations described in Section 2.4:

- Temperature
- Salinity
- DO
- pH
- Turbidity

2.3 CHEMICAL MONITORING

As part of the pre- and post-discharge events, water quality grab samples will be collected for chemical analysis of the following parameters according to the schedule and at the locations described in Section 2.4:

- BOD (5-day test)
- TSS
- Alkalinity
- Ammonia (total nitrogen)
- Total sulfides

2.4 MONITORING SCHEDULE AND LOCATIONS

Based on the water quality sampling schedule described in the February 2016 ADEC letter, and on a subsequent conference call with ADEC on February 17, 2016, pre-discharge water quality samples will be collected no more than 72 hours prior to the first seafood waste disposal event and post-discharge water quality samples will be collected no more than 24 hours after the last day of discharge. In order to minimize drift of sampling equipment and achieve the required sampling depth, monitoring will be conducted at slack tide.

In order to maximize the dispersal of seafood waste during offloading, disposal will occur while the barge is underway (at a minimum speed of 3 knots, as required by the CD). The vessel track discharge route consists of vessel track lines running in a north/south direction and each track line is anticipated to be approximately 1.25 miles long. As put forth in the February 2016 letter, water quality grab samples will be taken at three locations at ⅕-mile intervals along the discharge route. Therefore, as an example, if the discharge vessel track line is 1.25 miles in length, in order to collect samples that are representative of the discharge area, water quality grab samples would be collected at approximately 0.4 miles, 0.8 miles, and 1.25 miles, centered generally on the north/south axis of the at-sea disposal site. All proposed field locations are approximate target locations, but may be modified slightly based on field conditions of final length of the discharge route.

At each location, water quality grab samples will be collected at three depths within the water column: (1) -10 meters (-33 feet); (2) -60 meters (-197 feet); and (3) -120 meters (-394 feet).

3.0 Notification Plan

If during transit of seafood waste there is evidence of BMP failure and seafood waste is released outside of the identified at-sea disposal area, Floyd|Snider will notify the ADEC seafood and aquacultural permitting section lead, Ms. Clynda A. Case, by phone, (907) 376-1865, or email, clynda.case@alaska.gov, immediately.

The notification should include the following:

1. A description of the nature, extent, and cause of the release.
2. The period of the release, including the date, time, and resolution to the situation.
3. The steps taken to minimize, eliminate, and prevent a reoccurrence of the release or incident.

A written report to ADEC must also be submitted within 5 days of the release that provides a description of the nature and location of the release, photographs, a description of the BMPs that were or will be implemented to prevent further incidents, and any other pertinent information.

4.0 Documentation and Reporting

Orion is intending to conduct dredging 7 days a week and 24 hours a day. Floyd|Snider will provide oversight during all project activities, day and night. During disposal activities, Floyd|Snider oversight personnel will fill out a Sea Surface Visual Monitoring Log (Appendix D) detailing observations during transit to the at-sea disposal site, as well as observations made during disposal actions such as sea life present, weather conditions, tide cycles, and other pertinent observations. The field personnel will also include an estimate of the volume of seafood waste disposed.

During water quality monitoring, Floyd|Snider and NewFields will be providing oversight. Floyd|Snider personnel will fill out water quality monitoring forms (Appendix D) during the pre-discharge and post-discharge sampling events that will include all pertinent observations, calibration information, water quality field parameters, and chemical analysis documentation.

Specifically, the water quality monitoring form will include the following:

- Name of monitoring personnel
- Date and time of events
- Weather conditions and temperature
- Water quality meter calibration
- Description of field activities, including sampling locations and samples collected
- Site conditions (if noteworthy)
- Date and time of the monitoring at each location, including whether the event is pre-discharge or post-discharge
- Monitoring notes, which may include:
    - Field conditions (weather, temperature, any prior disturbance of the waterbody, etc.)
    - Monitoring equipment calibration information
- Type of tide
- Location and depth of samples collected
- Water quality meter monitoring results for those parameters measured in the field with a multi-parameter probe

After receipt of laboratory analytical results following the post-discharge event, pre-discharge and post-discharge water quality monitoring forms and the sea surface visual monitoring logs will be submitted to ADEC.

Following project completion, as described in Section 7.1 of the WRP, a Waste Remediation Completion Report (WRCR) will be prepared and submitted to USEPA for review and approval within 60 days of the completion of the project. Following receipt of USEPA's comments on the draft WRCR, a final WRCR will be submitted to USEPA within 45 days. The results of water quality monitoring will be tabulated and presented in an appendix to the WRCR along with all pre-discharge and post-discharge monitoring forms and daily field observation forms. The WRCR, including the tabulated water quality monitoring results, compared to criteria, will also be provided to ADEC.

5.0 References

Alaska Department of Environmental Conservation (ADEC). 2008. *Alaska Water Quality Criteria Manual for Toxic and Other Deleterious Organic and Inorganic Substances*. 12 December.

2016. Letter to Tom Enlow, UniSea, Inc., from ADEC re: *Unisea short-term water quality variance application for the discharge of dredged seafood residues in Unalaska Bay, Alaska.* 9 February.

Floyd|Snider. 2014. *Seafood Waste Pile Alternatives Analysis*. Prepared for UniSea, Inc. 24 October.

_____. 2015. *Waste Remediation Plan.* Prepared for UniSea, Inc. 16 November.

RPS Evans-Hamilton (RPS) and NewFields. 2014. *UniSea, Inc. Benthic Impact Survey, Dutch Harbor, Alaska*. For submittal to U.S. Environmental Protection Agency, Region 10 and State of Alaska. Prepared by RPS Evans-Hamilton and NewFields. 3 June.

U.S. Environmental Protection Agency (USEPA). 2003. Authorization to Discharge under the National Pollutant Discharge Elimination System. NPDES Permit #AK-002865-7.

_____. 2011. *Consent Decree.* Civil Action No. 3:11-CV-00037-JWS. USEPA and State of Alaska. 1 June.

_____. 2015. *Letter to John Iani, Perkins Coie, from USEPA re: United States and State of Alaska v. UniSea Inc. Civil Action No. 3:11-ev-00037-JWS.* 27 April.

UniSea, Inc.

Water Quality Protection and Monitoring Plan

Table

Table 1.1
Water Quality Parameters, Sampling Requirements, Criteria, and Applicable Water Uses

Parameter	Units	Location	Frequency	Type of Sample	Water Quality Criteria[1, 2, 3]	Applicable Water Use[1]
Biological Oxygen Demand (BOD; 5-day test)	mg/L	Three locations separated at ⅓ intervals along the anticipated 1.25-mile-long vessel discharge track.	Within 72 hours of pre-discharge and within 24 hours after post-discharge.	Grab samples taken at depths of: -10 M (-33 feet), -60 M (-197 feet), -120 M (-394 feet)	None; however, increased BOD loading can lead to lowering dissolved oxygen levels	(B) Water Recreation (ii) Secondary Recreation; and, (C) Growth and Propagation of Fish, Shellfish, Other Aquatic Life, and Wildlife
Total Suspended Solids (TSS)	mg/L				None	
Temperature	°C				May not cause the weekly average temperature to increase more than 1 °C[4]	
Salinity	ppt				Per 18 AAC 70.020(b), Maximum allowable variation greater than natural salinity: **Natural Salinity (ppt)** / **Human-Induced Salinity (ppt)** 0.0 to 3.5 / 1 Greater than 3.5 to 13.5 / 2 Greater than 13.5 to 35.0 / 4	
Alkalinity	mg-$CaCO_3$/L				None	
Ammonia[5] (total nitrogen)	mg/L				Must be calculated using Appendix F and G of the 2008 *Alaska Water Quality Criteria Manual for Toxic and Other Deleterious Organic and Inorganic Substances*	
Total Sulfides and Total Sulfates[6]	mg/L				2.0 µg/L (unassociated hydrogen sulfide)	
Dissolved Oxygen (DO)	mg/L				DO may not be reduced less than 4 mg/L at any point beneath the surface.	
pH	S.U.				May not be less than 6.5 or greater than 8.5, and may not vary more than 0.2 pH units outside of the naturally occurring range.	
Turbidity	NTU				May not exceed 25 NTU.	

Notes:
1 Per Alaska Administrative Code Title 18, Chapter 70, Section 020 and the 2008 *Alaska Water Quality Criteria Manual for Toxic and Other Deleterious Organic and Inorganic Substances*.
2 If the criteria differed between water use designations, the most conservative criteria were chosen.
3 For those parameters where there are no applicable marine water quality criteria, the pre-discharge results will represent the background conditions prior to discharge and will serve as the naturally occurring conditions(s) for comparison to the post-discharge results.
4 Temperature readings are not being required weekly, and pre-discharge to post-discharge results span over multiple weeks; therefore, the results should be used for comparison only.
5 Compliance with the ammonia water quality standard is dependent on ambient receiving water quality parameters of salinity, pH, alkalinity, and temperature.
6 Total sulfides and total sulfates will be analyzed instead of hydrogen sulfides, per coordination with ADEC on February 22, 2016, and March 15, 2016.

Abbreviations:
ADEC Alaska Department of Environmental Conservation
°C Celsius
M Meter
µg/L Micrograms per liter
mg-$CaCO_3$/L Milligrams calcium carbonate per liter
mg/L Milligrams per liter
NTU Nephelometric turbidity units
ppt Parts per thousand
S.U. Standard Unit

UniSea, Inc.

Water Quality Protection and Monitoring Plan

Figures

Note:
· Baselayers provided by NOAA and Esri.

FLOYD | SNIDER
strategy ▪ science ▪ engineering

Water Quality Protection and Monitoring Plan
UniSea, Inc.
Dutch Harbor, Alaska

Figure 1.1
Vicinity Map

I:\GIS\Projects\UniSea-DH\MXD\Water Quality Protection and Monitoring Plan\Figure 1.1 Vicinity Map.mxd
2/23/2016

Legend

- Approximate Extent of At-Sea Disposal Site[1]
- Baseline - Bay Closing Line
- 3-Nautical Mile Line
- 1-Nautical Mile Line
- 40 Sounding (Fathoms MLLW)
- Approximate Vessel Track Lines
- Land Area

Depth Contours (Fathoms MLLW)

- 0–10
- 11–50
- 51–100
- > 100

Notes:
1. The approximate extent of the at-sea disposal site is based on the anticpated area of disposal when the barge is being towed at the Consent Decree-required speed of at least 3 knots.
· Basemap layers provided by NOAA.

Abbreviations:
MLLW = Mean Lower Low Water
NOAA = National Oceanic and Atmospheric Administration

0 1 2 4
Nautical Miles
N

FLOYD | SNIDER
strategy ▪ science ▪ engineering

Water Quality Protection and Monitoring Plan
UniSea, Inc.
Dutch Harbor, Alaska

Figure 1.2
At-Sea Disposal Site and Contractor Anticipated Vessel Track Lines

I:\GIS\Projects\UniSea-DH\MXD\Water Quality Protection and Monitoring Plan\Figure 1.2 Proposed Seafood Waste Disposal Location.mxd
2/25/2016

UniSea, Inc.

Water Quality Protection and Monitoring Plan

Appendix A
Best Management Practices to Minimize Impacts to Water Quality

Best Management Practices to Minimize Impacts to Water Quality

Potential water quality impacts at the discharge site will be minimized through implementation of a suite of best management practices (BMPs), described herein. Water quality sampling will also occur along the discharge route within the at-sea disposal area to provide a quantified degree of temporary impact resulting from the proposed activity. This information, in combination with the Water Quality Protection and Monitoring Plan and its other appendices, fulfill the requirements of the Alaska Administrative Code (AAC) Title 18, Chapter 70, Section 200(b)(3) and (d)(3).

BEST MANAGEMENT PRACTICES IMPLEMENTED DURING SEAFOOD WASTE TRANSPORT

- The barge used to transport dredged material to the discharge site will be equipped with water-tight bin walls to ensure that inadvertent releases of seafood waste and residual water do not occur during transport.
- The deck barge will not be overfilled prior to transport to avoid the potential for overboard spillage of material.
- Dredged material transport will not occur during extreme weather events to ensure stability of the vessel and the material.
- The marine contractor and construction oversight personnel will conduct visual monitoring of the water surface during transport to the discharge site.

BEST MANAGEMENT PRACTICES IMPLEMENTED DURING AT-SEA WASTE DISCHARGE

- To ensure effective dispersal and to reduce associated turbidity levels, the disposal barge will be moving at a minimum speed of 3 knots as the dredged material is released (per Consent Decree requirements).
- The discharge will occur above a seafloor depression with an average water depth of approximately 620 feet mean lower low water (MLLW), where currents are favorable and trending northward toward the mouth of Unalaska Bay.
- A front-end loader will be used to pick up a manageable volume of dredged material per bucket load and gradually release it over the side as the barge is towed at the required 3-knot speed. A fire hose is also expected to be available for use and aid in discharge as needed. These methods will maintain a slower and more controlled release compared to that of a spilt-hull bottom dump barge.
- The marine contractor and construction oversight personnel will conduct visual monitoring of the water surface during discharge, and will also make note of presence of sea life, weather conditions, tide cycles, and other pertinent observations. This information will be retained in a standard “Sea Surface Visual Monitoring Log.”

- Adequate oil and fuel clean-up equipment will be maintained on the vessels, and the transfer of fuel within the discharge area (or during transport) will be prohibited, with the exception of emergency situations.
- The discharge of bilge water at the discharge site will not occur unless the discharge is for safety reasons. If bilge water is discharged for safety reasons, the use of oil/water separators or similar treatment technology would be used to prevent the discharge of petroleum.
- Discharge from a marine sanitation device or graywater discharge at the disposal site will be prohibited.

UniSea, Inc.

Water Quality Protection and Monitoring Plan

Appendix B
Assessment of Impacts to the Uses of Water from the UniSea Dredging and Disposal Activity

Assessment of Impacts to the Uses of Water from the UniSea Dredging and Disposal Activity

INTRODUCTION

Nationwide Permit (NWP) No. 27 authorizes activities associated with the restoration and enhancement of tidal open waters, provided that those activities result in net increases in aquatic resource functions and services. Such restoration of tidal open waters would occur as a result of the removal of accumulated sediments and such activities would occur in compliance with all general conditions of the NWP. As required by the Consent Decree (CD) with the U.S. Environmental Protection Agency, UniSea, Inc. (UniSea) prepared a Waste Remediation Plan (WRP) outlining the means and methods for removal of accumulated seafood waste at the UniSea Unalaska facility greater than 1 foot in thickness, and the transport of dewatered seafood waste to the proposed location for at-sea disposal in the summer of 2016. The seafood waste removal and disposal action includes the dredging of accumulated seafood waste that is mixed with site sediments, and the purpose of the removal action, as directed by USEPA, is to restore benthic habitat.

The Alaska Department of Environmental Conservation (ADEC) has reviewed UniSea's various Consent Decree-required documents to determine if adequate information exists therein to satisfy the short-term WQV regulations found in 18 AAC 70.200. As part of this review, ADEC outlined 18 AAC 70.200 requirements in a letter dated February 9, 2016, including the request for more information necessitated by 18 AAC 70.200 (d)(5), stating; further information should be included in the WRP that estimates the impacts from the dredging and disposal activity on the uses of the water involved including recreation and use for habitat, rearing, growth, or migration by fish, shellfish, other aquatic life, and wildlife.

The text below addresses the request for further information regarding "uses of the water" as described in 18 AAC 70.200 (d)(5). The following sections are organized to address the "uses of the water" disciplines, and are organized by the following categories: Benthic Habitat and Other Aquatic Life, Fish Shellfish and Other Invertebrates, Wildlife addresses birds and marine mammals, and Subsistence and Recreational Fisheries. Each section provides a summary of existing conditions for the uses of the water and corresponding habitat, then describes the potential short-term and long-term impacts that could occur at the UniSea dredge site and at-sea disposal site as the result of the dredging and disposal activities.

BENTHIC HABITAT AND OTHER AQUATIC LIFE

Depending on depth and substrate characteristics (e.g., mud, sand, cobble, rock), healthy benthic habitats in Unalaska Bay support a diverse community of benthic organisms. Intertidal and shallow, nearshore habitats support a variety of marine vegetation species, including rockweed (*Fucus* sp.), fringed sieve kelp (*Agarum clathratum*), winged kelp (*Alaria* sp.), and sea lettuce (*Ulva* sp.) (USFWS 2000, as cited in USACE 2004). Smaller infaunal and epifaunal invertebrates

typical in healthy Unalaska Bay benthic communities include anemones, polychaetes, sea cucumbers, snails, mussels, barnacles, hermit crabs, green sea urchins, limpets, and sea stars (USFWS 2000, 2003, as cited in USACE 2004).

As described in various reports and communications necessitating the planned action, the organic-rich seafood waste piles at the UniSea Unalaska facility have led to characterizing the benthic habitat at the dredge site as poor quality. Site investigations have shown the native benthos covered by feet of seafood waste, with the organic seafood waste covered by large mats of the bacteria *Beggiatoa* sp. Sediments are anoxic and unable to support a healthy benthic infaunal community, which contributes to impaired epifaunal habitats available for higher trophic level species. A natural marine vegetation community is absent, but this is attributed to the site occurring in deeper waters than can typically support marine vegetation.

Dredge Site

Short-term

Planned dredging activities will occur in offshore areas, away from intertidal habitats, where the seafood waste pile is 1-foot in depth or greater. No backfilling or capping of the sediment is included as part of the seafood waste pile removal project. Dredging of the seafood waste pile would temporarily degrade water quality during active dredging, but is not anticipated to result in any long-term, adverse impacts to marine water quality. Potential reductions in dissolved oxygen would be minimal due to the winds, tides, and currents at the dredge site. In addition, a pilot dredging study conducted by UniSea did not detect reductions in dissolved oxygen during simulated dredging activities on a much smaller scale using a van Veen sampler (RPS et al. 2014). Some of the fine-grained solids will become suspended during dredging activity, but these suspended solids are largely expected to be dispersed in local currents, and not settle out of the water column in sufficient volume to smother adjacent benthic communities. As a result, potential dredging impacts on the benthic community would largely be confined to the project site.

Long-term

The initial recovery of the benthic community in the project footprint is expected to begin immediately following the completion of dredging. The physical absence of the waste piles, and the improvement of available benthic habitat may allow the recovery of diverse and productive infaunal and epifaunal organisms, including clams, sea cucumbers, sea stars, sea urchins, crabs, polychaetes, hydroids, and other invertebrates, considered important food resources for higher trophic organisms. The site is expected to experience the recovery of epiphytic and epibenthic invertebrates, notably copepods and amphipods, considered essential for prey for juvenile fish. Although the footprint of the planned dredge activity exceeds the normal maximum depth for kelp, the improvement of benthic habitats in the project footprint may allow for adjacent shallow water habitats to experience sufficient recovery to allow for the emergence of a diverse and productive marine vegetated community, potentially including kelp (i.e., *Agarum*, *Alaria,* and

Palmeria sp.) and algae such as the sea lettuce *Ulva*. However, although larger and more mobile organisms could return to the site within hours or days after the completion of dredging activities, a more complete recovery and recolonization of infaunal and sedentary epifaunal benthic community is expected to take several years.

At-Sea Disposal Site

Short-term

Disposal operations will be done while the barge is underway (at a minimum speed of 3 knots, per Consent Decree requirements) to maximize dispersal of the seafood waste. The surface currents (extending to approximately 15 feet of water) flow to the north, toward the mouth of the bay, at an average rate of 0.12 knots and an upper range of approximately 0.3 knots (WRP). Each on-site disposal event will take an estimated 5-9 hours utilizing a loader to dispose the waste over the side with a hose available to wash the deck. The finer grained organic material is expected to be dispersed on the currents and not settle onto the benthos. Larger and heavier seafood waste such as fish bones and shellfish shell are expected to settle onto benthic habitats. In addition, to maximize the required removal of the seafood waste, slight over-dredging into the seabed may occur. Therefore, some naturally occurring cobble, gravel, or clay material from the dredge site may be present in the dredged material and therefore would be expected to reach the benthos at the at-sea disposal site. However, the speed of the vessel during disposal activities in combination with the small amount of material anticipated to reach the benthos relative to the size of the at-sea disposal site is not expected to bury or smother the existing benthic community. Any benthic community impacts that might occur are expected to be minimal in extent and relatively short in duration, with full habitat function expected in the weeks to months following disposal. Due to the majority of organic material being very fine grained, this material is expected to be dispersed in surface waters during disposal activities; making it bioavailable in the water column and minimizing the risk of creating benthic biochemical oxygen demand (BOD) issues at the disposal site. As a result, the disposal activities are not expected to substantially alter existing conditions and uses of the benthic habitat or community by marine organisms.

Long-term

The at-sea disposal site was selected, in part, because it is a dispersive site with a depth of approximately 600 feet. These characteristics facilitate finer-grained organic waste becoming more readily available in the water column to consuming organisms and disperse more broadly immediately following disposal. The disposal methods, combined with the disposal site being much larger than the dredge site, are expected to minimize potential impacts associated with mounding of wastes, increases in BOD, and contamination with bacteria associated with partly degraded organic waste. As a result, the disposal activity is expected to have minimal or no effect on the long-term benthic habitat quality or community composition at the disposal site.

FISH, SHELLFISH, AND OTHER MARINE INVERTEBRATES

In a literature review of Alaskan fish, the USACE (2004) estimates that approximately 100 different species of fish and potentially 200 species of invertebrates occur within Unalaska Bay. The occurrence and distribution of these species in this region can vary substantially by season and habitat type (Robards 1999; Johnson et al. 2012, 2015; USACE 2004). For example, young-of-the-year salmon, cod, and pollock occur in nearshore habitats in the spring months, but move further offshore in summer. Similarly for shellfish, female red king crabs (*Paralithodes camtschaticus*) typically move into shallow nearshore waters during the winter months (November to early-March) to allow their embryos to hatch, then return to deeper water to molt and mate in spring (Stone et al. 1992, 2011).

Some of the more commonly occurring fish in and around Amaknak and Unalaska Island include Pacific halibut (*Hippoglossus stenolepis*), Pacific cod (*Gadus macrocephalus*), walleye pollock (*Theragra chalcogramma*), multiple species of salmon, rockfish, sculpin, greenling, Pacific herring (*Clupea pallasii*), various species of flatfish, and others (Robards 1999, USACE 2004). Some of the more economically and recreationally important shellfish species include shrimp, red king crab, tanner crab (*Chionoecetes bairdi*), and Dungeness crab (*Cancer magister*). Other important marine invertebrate species include clams, mussels, sea stars, and sea urchins.

Dredge Site

Short-term

Planned dredging activities will occur in areas where the seafood waste pile is 1-foot in depth or greater. No dredging would occur within intertidal habitats. Due to the poor quality of benthic habitat at the dredge site, the prevalence of fish and shellfish in the project footprint is low (RPS and NewFields 2014). Previous surveys observed tanner crab and king crab within the defined footprint of the dredge site in very low numbers, with their occurrence even less prevalent where the seafood waste pile was overgrown with *Beggiatoa* bacterial mats.

The majority of fish and motile shellfish are expected to avoid or move away from the immediate project area during active dredging, though some may be attracted to the perimeter of the activity to scavenge on potentially available food resources. Although the potential entrainment of fish is extremely unlikely due to using a clamshell bucket dredge, dredging activities do have the potential to entrain shellfish. However, because the abundance of invertebrates in planned dredged areas is very low, the number of shellfish potentially entrained is correspondingly low. However, due to the project occurring in May-June, when red king crabs typically move to deeper waters, and based on the reasons avoidance behavior for fish discussed above, the number potentially entrained is expected to be low.

Juvenile pink (*Oncorhynchus gorbuscha*) and chum salmon (*O. keta*), walleye pollock (*Gadus chalcogrammus*), and Pacific cod (*Gadus macrocephalus*) were found to be the most abundant fish species caught in a July beach seine survey that included the southeast portion of Amaknak

Island (Robards 1999). These shallow nearshore occurring juveniles would be less likely to occur in the immediate vicinity of the dredge operations than along the shoreline. However, those fish migrating along the shoreline of Captains Bay during dredging, may display startle or avoidance response from the dredging activity or the potential plume of suspended solids likely to occur. Any startle response, change in migrating, foraging or other behavior is anticipated to be short in duration, with normal behavior resuming shortly after the dredging activity has stopped for the day.

Larger juvenile or adult salmon, Dolly Varden (*Salvelinus malma*), Pacific cod, walleye pollock, sand lance (*Ammodytes hexapterus*), flatfish and a variety of other fish species that have the potential to occur in the immediate vicinity of the site, would be expected to avoid the area during active dredging operations. Due to the project occurring in May and early June and its overall small footprint, impacts to fish movement from dredging activities would be limited, and localized, and would not alter overall fish movement of migration behavior within the greater Captains Bay area.

Long-term

The removal of the seafood waste pile may increase habitat complexity, which is essential for juvenile fish and shellfish species to avoid predation. The restoration and recovery of the benthic habitat function and infaunal and epifaunal communities is anticipated to result in a corresponding increase in foraging resources for higher trophic organisms, including juvenile shrimp, crab and fish.

Pacific cod, halibut, sole, and other demersal fish would realize an increase in suitable benthic habitat potentially increasing their local abundance. Nearshore migrating juvenile fish such as pink and chum salmon, forage fish, walleye pollock, and Pacific cod are expected to benefit from an improvement in the habitat they use for foraging, refuge, and migration. Following the natural recovery of the benthic community, this project is expected to substantially improve the ability of the habitat to support the rearing, growth, and migration by fish, shellfish, or other aquatic life, and wildlife.

At-Sea Disposal Site

Short-term

As described above for benthic habitats, the methods selected for the disposal of the seafood waste at the disposal site were chosen to disperse the finer-grained organic matter in surface waters, making it bioavailable in the water column and available to pelagic species. However, larger components of the dredge material (e.g., shell, fish bones, mud, sand, or cobble) are likely to settle to the seafloor, potentially affecting demersal habitats and species.

The dispersed release of fine-grained organic material in the water column is anticipated to immediately increase the local bioavailability of nutrients to plankton and other organisms in the

water column. By May 16, 2016, Dutch Harbor will experience more than 16 hours between sunrise and sunset, so, for the most part, phytoplankton will not be light-limited during disposal activities. Phytoplankton, zooplankton, Euphausids (krill), and potentially forage fish will exploit the available nutrients. Potential increases in available plankton may correspond with a temporary increase in fish, shrimp, or larger predators taking advantage of an available food source. The temporary increase of these organisms in the vicinity of the at-sea disposal site is expected to be limited in duration and scale. Shortly after the completion of disposal activities, these communities would be expected to once again become nutrient-limited, and resemble typical pelagic water column communities.

Aside from potential disturbance by larger disposed items settling out of the water column during disposal activities, demersal fish, shellfish and other marine invertebrate communities of the at-sea disposal site will largely be unaffected by this action. The disposal methods were chosen to avoid burying demersal habitats, organisms, or creating disposal mounds on the sea floor. The small volume of organic matter that does reach the sea floor is expected to be distributed over a large area. Opportunistic scavengers may benefit from disposal activities, but the small, periodic and temporary increase in organic matter is unlikely to result in any shift of the benthic community. The vast majority of the disposal material will be seafood waste, with only minor inorganic matter associated with the required over-dredging. Larger inorganic matter that reaches the seafloor (e.g., sand, cobble, rocks) will be limited in volume, and is anticipated to have little or no effect on benthic habitats utilized by fish, shellfish, and other marine invertebrates of the at-sea disposal site.

Long-term

There would be no long-term effects of the at-sea disposal of seafood waste on plankton, shrimp pelagic fish communities. Within an estimated few days to a week of the completion of disposal activities, plankton and pelagic fish communities would be expected to resemble typical communities of Unalaska Bay. As seafood waste disposal methods were selected to minimize impacts to benthic habitats, long-term impacts to these communities are not anticipated. The small volume of bones, shell, sand, cobble, and rocks are not anticipated to bury existing habitats or communities. Similarly, this material is not anticipated to create new or functionally different habitat to be exploited by demersal organisms. As a result, at-sea disposal is anticipated to have no long-term effect on benthic habitats utilized by fish, shellfish, and other marine invertebrates at the disposal site

WILDLIFE

A variety of marine wildlife species occur in the vicinity of Amaknak and Unalaska Island, including birds and waterfowl and marine mammals. Similar to fish, the occurrence and distribution of wildlife can vary substantially based on the time of year.

Birds and waterfowl include bald eagle, ravens, cormorants, gulls, guillemots, puffins, scoters, eiders, goldeneye, mergansers, and ducks, among others (USACE 2004). A number of these

species nest and rear broods on Unalaska and Amaknak islands (USACE 2004). Waterfowl are most abundant around Amaknak Island during the winter, when sea ducks and other waterfowl concentrate for several months (USACE 2004). Due to its protected status, a number of surveys have focused on the occurrence of Steller's eiders along the Aleutian chain. Steller's eiders (*Polysticta stelleri*), a small sea duck listed as threatened under ESA, overwinter in the waters surrounding the Aleutian Islands, foraging on snails, clams, worms, and echinoderms found in the bottom sediment while diving in shallow, nearshore waters. Steller's eiders occur in the nearshore waters of Amaknak Island, including Captains Bay, from February-May (Schroeder 2004; as cited in USFWS 2007), with peak abundance occurring in February (USFWS 2007). A study on the behaviors of Steller's eider and harlequin ducks (*Histrionicus histrionicus*), another small sea duck, overwintering in the vicinity of Amaknak Island suggested that food was readily available for these species (Reed and Flint 2007).

Marine mammals that occur in Unalaska Bay and Captains Bay include sea otters (*Enhydra lutris*), harbor seals (*Phoca vitulina*), northern fur seals (*Callorhinus ursinus*), Steller's sea lions (*Eumetopias jubatus*), and the occasional harbor porpoise (*Phocoena phocoena*), Pacific white-sided dolphin (*Lagenorhynchus obliquidens*) or whale. No marine mammal haulouts occur within 10 miles of the dredge or at-sea disposal sites. Harbor seals, sea otters, and Steller's sea lion are the most common occurring marine mammals. Whales with the potential to occur near the at-sea disposal site in outer Unalaska Bay area include finback (*Balaenoptera physalus*), humpback (*Megaptera novaeangliae*), Minke (*B. acutorostrata*), and orca (*Orcinus orca*) (USACE 2004). Humpback whales are typically observed feeding in Unalaska Bay during the months of July and August.

Dredge Site

Short-term

During active dredging operations the majority of the wildlife is expected to avoid the immediate vicinity of the activity. Active dredging associated with the project would occur no more than 12-hours/day over a span of approximately 30 days. Dredging is scheduled to occur in May and early June when overwintering birds, including Steller's eider, are anticipated to be much less abundant than in winter months. Seals and sea lions are likely to investigate the dredging activity, but unlikely to stay in the absence of feeding opportunities. Sea otters are known to occur in Captains Bay, but would be expected to avoid the immediate vicinity of dredging activity. Whales, dolphins, and porpoises rarely occur at the dredge site, and would be unlikely to be affected by the project. However, due to their scavenging nature, it is likely that gulls, notably the glaucous-winged gull (*Larus glaucescens*), will maintain a continued presence at the dredge site during operations. Expected behavior from gulls may include hovering over the dredging activities in search of available food or rafting in the project vicinity. Gulls will likely continue this behavior throughout the course of the project. Typically, nearly all other wildlife should display avoidance behavior during active work. Aside from the likely presence of gulls, the daily occurrence and

distribution of wildlife species is expected to resemble existing conditions shortly after the end of a given day's dredging activities.

Long-term

The intent of the restoration activity at the dredge site is to reestablish the habitat function and natural benthic, demersal, and pelagic communities to resemble those of unaffected habitats. The benthic habitat will begin the recovery process immediately after dredging is completed. However, it may take a year or more for the benthic habitats in the project footprint and adjacent habitats to be fully restored such that the habitat helps support higher trophic wildlife species. However, certain aspects of the habitat in the project footprint will be improved immediately. The removal of the seafood waste pile will improve water and benthic habitat conditions sufficiently such that foraging and migrating fish won't avoid the site, which correspond to foraging opportunities for waterfowl and marine mammals. As the benthic habitat quality improves, so does the potential for clams and other shellfish to increase their presence at the site. An increase in clams and other shellfish is likely to correspond to an increase in foraging opportunities for sea otters, seals, and sea lions. Although it is unknown when the site will be fully restored and function more naturally, marine wildlife will realize an improvement in the quality of the habitat within the first year of the completion of the project.

At-Sea Disposal Site

Short-term

Disposal of the material at the disposal site is not anticipated to have a substantial effect on marine waterfowl or seabirds. Many of these species forage in the shallow nearshore environment, with the disposal site being located more than a mile offshore in approximately 600-feet of water. During active disposal, some birds, such as gulls, are likely to follow the barge looking for fish scraps, scavenging opportunities, or fish or krill, should plankton increase sufficiently to become a food resource. However, due to the largely decomposed nature of the material planned for disposal, these birds are largely expected to disperse in the absence of available foraging material. Otters, seals, and sea lions are unlikely to be affected by disposal activities. However, should disposal activities result in short-term increases in plankton, whales potentially occurring in outer Unalaska Bay may take advantage of this available food source. Whether the amount of bioavailable organic material is sufficient for this to occur is unknown.

Long-term

Due to the depth of the site being greater than most marine wildlife species utilize, its offshore location, and the methods selected for disposing the seafood waste, there are no anticipated long-term impacts to birds, waterfowl, or marine mammals from disposing of the seafood waste material in the at-sea disposal site.

SUBSISTENCE AND RECREATIONAL USES

The city of Unalaska's economy is almost entirely dependent on commercial fishing, seafood processing, fleet services and marine transportation. Therefore, it is not surprising that many of the residents also take part in recreational and subsistence fishing activities. According to a summary of Alaskan community profiles, the most important subsistence marine or aquatic resources to the residents of Unalaska are sockeye salmon (*O. nerka*), Pacific halibut (*Hippoglossus stenolepis*), coho salmon (*O. kisutch*), pink salmon (*O. gorbuscha*) and crab (Himes-Cornell et al. 2013). In 2008, the most recent year for which data were available for subsistence salmon harvesting, there were 199 subsistence salmon permits issued to Unalaska residents (Himes-Cornell et al. 2013). In 2010, the most recent information regarding subsistence halibut fishing, 55 Subsistence Halibut Registration Certificate cards were issued.

A variety of marine species are targeted by recreational fishermen in Unalaska, including: pink salmon, chum salmon, Chinook (king) salmon (*O. tshawytscha*), coho (silver) salmon, sockeye salmon, halibut, rockfish, crab, black cod/sablefish (*Anoplopoma fimbria*), shrimp, and octopus. In 2010, there were 542 sport fishing licenses sold to Unalaska residents, and another 621 sold to non-residents. In 2010, there were two sport fish guide businesses active in Unalaska, with their respective sport fish guide licenses held by residents (Himes-Cornell et al. 2013). Coho and sockeye salmon are the most heavily targeted salmon for sport fishing and personal use in the Unalaska area (USACE 2004).

Dredge Site

Due to the relative absence of harvestable fish resources in the immediate project vicinity, very little to no subsistence or recreational fishing occurs at the site. In addition, the May to early June time period for dredging activities occurs prior to the summer peak fishing season. As a result, dredging activity is not anticipated to effect existing subsistence or recreational fishing. Following the restoration of the dredge site, the increase in benthic habitat quality may correspond with an increase in exploitable resources for subsistence and recreational fishermen. However the sites characteristics include being too shallow for typical halibut fishing and typically not heavily crabbed or fished for salmon fishing. As a result, the dredging activity is expected to have minimal or no effect on subsistence or recreational fishing.

At-Sea Disposal Site

The at-sea disposal site and surrounding waters are much deeper (up to 600 ft. depth) than typically utilized by subsistence or sport fishing for halibut (100-200 ft. depth). The selected site occurs greater than 1 nautical mile east of Eider Point, where subsistence and sport fishing for cod and halibut is known to occur. The at-sea disposal site was selected to maximize the dispersion of fine-grained organic matter, reducing the potential to affect benthic habitats. That material which does settle on the bottom would be low in organic content, and is not expected to adversely affect the short-term or long-term quality of demersal habitat. Therefore, relative to existing conditions, the disposal of the seafood waste is not expected to reduce fish or crab

occurrence at the disposal site, or those areas currently utilized by subsistence and recreational fishermen.

Round trip barge traffic between the dredge site and at-sea disposal site is expected to average one roundtrip every two days, and would not occur more than once per day. The limited number of trips between the two sites associated with disposal activities is not expected to result in a substantial increase in vessel traffic relative to existing conditions, and would not otherwise impede existing uses of the water by subsistence or recreational vessels entering Captains Bay from outer Unalaska Bay. Therefore the seafood waste disposal, including the transit to and from the at-sea disposal site and disposal activities themselves, are expected to have little or no effect on the access of fishing vessels to currently utilized fishing sites, the fishing activities of these vessels, or the success of the fishermen that operate them.

SUMMARY

The purpose of the seafood waste removal and disposal action, as directed by USEPA, is to restore benthic habitat at the dredge site, while minimizing potential impacts to the disposal site. The removal of the seafood waste at the dredge site will cause some short-term impacts, including temporarily degrading water quality, the possible entrainment of shellfish and other invertebrates in the clamshell dredge, and potential avoidance of the immediate project vicinity by fish and wildlife. The long-term benefit from the removal of the seafood waste is a more properly functioning benthic community able to support lower trophic organisms, and provide habitat and foraging, refuge, and migration of fish, shellfish, and wildlife.

Impacts at the disposal site are expected to be minimal and short in duration. Due to the characteristics of the disposal site being approximately 600 feet deep, with strong surface currents, finer-grained organic is expected to be broadly dispersed and readily available in the water column to consuming organisms. Reductions in surface water quality are expected to be short in duration, with no long-term or chronic issues related to disposal. Benthic habitats may experience some minor short-term impacts during disposal activities, but due to the large size of the disposal site compared to the volume of material expected to reach the seafloor, the addition of this material is not expected to affect the long-term benthic habitat quality or benthic community composition. Disposal is expected to have very few short-term and little or no long-term effects on fish or wildlife occurrence, use, or distribution at the disposal site. With respect to both dredging and disposal actions, short-term and long-term impacts to the use of these waters by recreational and subsistence fishermen are not anticipated.

REFERENCES

Alaska Department of Environmental Conservation (ADEC). 2016. *Letter to Tom Enlow, UniSea, Inc., from ADEC re: Unisea short-term water quality variance application for the discharge of dredged seafood residues in Unalaska Bay, Alaska*. 9 February.

Floyd|Snider. 2015. *Waste Remediation Plan*. Prepared for UniSea, Inc. 16 November.

Himes-Cornell, A., K. Hoelting, C. Maguire, L. Munger-Little, J. Lee, J. Fisk, R. Felthoven, C. Geller, and P. Little. 2013. Community profiles for North Pacific fisheries - Alaska. U.S. Dep. *Commer*., NOAA Tech. Memo. NMFS-AFSC-259, Volume 6, 348 p.

Johnson, S.W., A.D. Neff, J.F. Thedinga, M.R. Lindeberg, and J.M. Maselko. 2012. *Atlas of nearshore fishes of Alaska: A synthesis of marine surveys from 1998 to 2011*. U.S. Dep. Commer., NOAA Tech. Memo. NMFS-AFSC-239, 261 p.

Johnson, S. W., A. D. Neff, and M. R. Lindeberg. 2015. *A handy field guide to the nearshore marine fishes of Alaska*. U.S. Dep. Commer., NOAA Tech. Memo. NMFS-AFSC-293, 211 p.

Mecklenburg, C. W., T. A. Mecklenburg, and L. K. Thorsteinson. 2002. *Fishes of Alaska. American Fisheries Society*. 1,116 pp.

Reed, J.A., and P.L. Flint. 2007. *Movements and Foraging Effort of Steller's Eiders and Harlequin Ducks Wintering near Dutch Harbor, Alaska*. Journal of Field Ornithology 78:124–132.

Robards, M. 1999. *Assessment of Nearshore Fish around Unalaska Using Beach Seines during July 1999*. Study produced by the USGS Biological Resources Division, Anchorage, AK. 11 p.

Schroeder, M. 2004. *Final Fish and Wildlife Coordination Act Report for Unalaska Boat Harbor*. August 2004. 79pp.

Stone, R.P., C.E. O'Clair, and T.C. Shirley. 1992. *Seasonal Migration and Distribution of Female Red King Crabs in a Southeast Alaskan Estuary*. Journal of Crustacean Biology 12(4): 546-560.

Stone, R.P., C.E. O'Clair, and T.C. Shirley. 2011. *Aggregating Behavior of Ovigerous Female Red King Crab, Paralithodes camtschaticus, in Auke Bay, Alaska*. Canadian Journal of Fisheries and Aquatic Sciences, 1993, 50(4): 750-758.

USACE. 2004. *Navigation Improvements Integrated Interim Feasibility Report and Final Environmental Impact Statement, Volume I. USACE, Alaska District*. September, 2004. 232 pp.

USFWS. 2000. *Unalaska Navigation Improvements. Draft Fish and Wildlife Coordination Act Report*. U.S. Fish and Wildlife Service Ecological Services Anchorage Field Office. Anchorage, AK.

USFWS. 2003. *Draft trip Report: Dutch Harbor/Unalaska 20-28 July 2003*. Unpublished report. U.S. Fish and Wildlife Service Ecological Services Anchorage Field Office. Anchorage, AK.

USFWS. 2007. *Final Biological Opinion on the Effects of the Construction of a Harbor at Little South America – South, Unalaska, Alaska, on the Threatened Steller's Eider (Polysticta stelleri).* Revised June 6, 2007. 91 pp, incl. appendices.

UniSea, Inc.

Water Quality Protection and Monitoring Plan

Appendix C
Quality Assurance Project Plan and Sampling and Analysis Plan

Table of Contents

1.0 Introduction C-1

1.1 QUALITY ASSURANCE PROJECT PLAN AND SAMPLING AND ANALYSIS PLAN ORGANIZATION C-1

2.0 Project Organization and Responsibility C-3

2.1 MANAGEMENT RESPONSIBILITIES C-3

2.2 QUALITY ASSURANCE RESPONSIBILITIES C-3

2.3 LABORATORY RESPONSIBILITIES C-3

2.4 FIELD RESPONSIBILITIES C-4

3.0 Sample Collection and Handling Procedures C-5

3.1 POSITIONING METHODOLOGY C-5

3.2 LOCATION AND SAMPLE IDENTIFICATION C-5

3.3 WATER QUALITY GRAB SAMPLING PROCEDURES C-5

3.4 MONITORING EQUIPMENT C-7

3.5 SAMPLE DOCUMENTATION AND FIELD NOTES C-8

3.6 SAMPLING EQUIPMENT DECONTAMINATION C-8

3.7 FIELD QUALITY ASSURANCE SAMPLES C-8

3.8 SAMPLE HANDLING AND CUSTODY DOCUMENTATION C-8

3.8.1 Sample Handling C-8

3.8.2 Sample Chain-of-Custody and Transportation C-9

4.0 Chemical Laboratory Analyses and Quality Assurance Objectives C-11

4.1 LABORATORY ANALYSES C-11

4.2 LABORATORY QUALITY ASSURANCE OBJECTIVES C-11

4.3 QUALITY CONTROL PROCEDURES C-11

4.3.1 Field Quality Control Procedures C-11

4.3.2 Laboratory Quality Control Procedures C-12

5.0 Data Reduction, Validation, and Reporting C-15

5.1 DATA REDUCTION AND REPORTING C-15

5.2 DATA VALIDATION C-16

6.0 References C-19

List of Tables

Table C.1 Analytes, Methods, Reporting Limits, Bottle Type, Preservation, and Holding Times

List of Acronyms and Abbreviations

Acronym/ Abbreviation	Definition
DQO	Data quality objective
LCS	Laboratory control sample
LCSD	Laboratory control sample duplicate
MS	Matrix spikes
NAD 83	North American Datum of 1983
QA	Quality assurance
QAPP	Quality Assurance Project Plan
QC	Quality control
RPD	Relative percent difference
SAP	Sampling and Analysis Plan
SGS	SGS North America, Inc.
UniSea	UniSea, Inc.
WQP&MP	Water Quality Protection and Monitoring Plan

1.0 Introduction

This Quality Assurance Project Plan (QAPP) and Sampling and Analysis Plan (SAP) is an appendix to the Water Quality Protection and Monitoring Plan (WQP&MP) and has been prepared on behalf of UniSea, Inc. (UniSea) to describe the organization, sampling procedures, and specific quality assurance/quality control (QA/QC) procedures that will occur during the monitoring and sampling associated with the discharge of dredged seafood waste. The dredged seafood waste has accumulated from permitted discharges from the UniSea seafood processing plant, which is located on the southwest shore of Amaknak Island (Figure 1.1 of the WQP&MP). The at-sea disposal site is located approximately 5 nautical miles from the UniSea facility and approximately 1.2 nautical miles from shore (Figure 1.2 of the WQP&MP).

1.1 QUALITY ASSURANCE PROJECT PLAN AND SAMPLING AND ANALYSIS PLAN ORGANIZATION

The remainder of the QAPP/SAP is organized in the following sections:

- **Section 2.0—Project Organization and Responsibility:** describes the project management structure for the sampling program.
- **Section 3.0—Sample Collection and Handling Procedures:** summarizes the protocols used for sampling and the general methods and procedures to be used, including the handling and tracking of sample custody.
- **Section 4.0—Chemical Laboratory Analysis and Quality Assurance Objectives:** details the laboratory procedures for ensuring data quality is maintained for field sampling, following chain-of-custody protocols, laboratory analyses, and reporting.
- **Section 5.0—Data Reduction, Validation, and Reporting:** describes the laboratory review and handling of data and reporting, and data validation procedures.
- **Section 6.0—References:** lists references used in the development of this QAPP/SAP.

This page intentionally left blank.

2.0 Project Organization and Responsibility

Under the authorization of UniSea, Floyd|Snider and NewFields will perform field activities consisting of water quality monitoring and sampling in support of disposal of seafood waste at the at-sea disposal site. SGS North America, Inc. (SGS) is the primary project laboratory providing all water quality sample laboratory analyses. The various QA field, laboratory, and management responsibilities of key project personnel are defined below.

2.1 MANAGEMENT RESPONSIBILITIES

Gregg Bishop—UniSea Point of Contact

Gregg Biship is UniSea's Point of Contact and Project Manager for this project. He will be involved in all aspects of the planning and implementation of the project.

Jessi Massingale—Floyd|Snider Project Manager

Jessi Massingale will have overall responsibility for project implementation. She will be responsible for the overall QA on this project to ensure that it meets technical and contractual requirements. As the Floyd|Snider Project Manager, she will report directly to UniSea's Project Manager and is responsible for technical QC and project oversight. She will also support UniSea in coordinating with the Agencies. Following plan approval by the Agencies, Ms. Massingale will be responsible for coordination to assure timely and successful completion of the sampling and analysis project. She will provide a copy of the approved QAPP/SAP to all sampling and testing subcontractors.

John Nakayama—NewFields Project Manager

John Nakayama, NewFields' Project Manager, will have overall responsibility for sampling implementation, laboratory coordination, and water quality sampling equipment and vessel logistics. As the Project Manager for the sampling effort, he will be responsible for the overall QA on this project to ensure that it meets technical and contractual requirements.

2.2 QUALITY ASSURANCE RESPONSIBILITIES

Tessa Gardner-Brown—Floyd|Snider QA Manager

The Floyd|Snider QA Manager reports directly to the Floyd|Snider Project Manager and will be responsible for ensuring that all QA/QC procedures for this project are being followed. The Floyd|Snider QA Manager will be responsible for sampling result review and compilation, and managing data validation of all sample results from the analytical laboratories.

2.3 LABORATORY RESPONSIBILITIES

SGS will perform all laboratory analyses of water quality samples in support of the seafood waste disposal activities.

2.4 FIELD RESPONSIBILITIES

Jasper Boas—NewFields' Field QA Officer

The NewFields Field QA Officer will be responsible for leading and coordinating the water quality monitoring. The NewFields Field QA Officer will report directly to the NewFields Project Manager and will provide overall direction for the field sampling in terms of logistics, personnel assignments, laboratory communications, and field operations. He will supervise collection of the field samples and will be responsible for: accurate sample positioning; recording sample locations, depths, and identification; ensuring conformance to sampling and handling requirements including field decontamination procedures; performing physical evaluation and logging of the samples; and ensuring chain-of-custody of the samples.

3.0 Sample Collection and Handling Procedures

This section describe the sampling procedures that will be followed during this investigation. Additional safety protocols that will be followed on-site are described in the Health and Safety Plan provided in Appendix B of the Waste Remediation Plan (Floyd|Snider 2015).

3.1 POSITIONING METHODOLOGY

Sampling locations will be determined in northings and eastings using a hand-held or vessel-mounted Digital Global Positioning System (DGPS) unit referenced to North American Datum of 1983 (NAD 83) to the nearest 0.1 second. The accuracy of measured and recorded horizontal coordinates will be within ±2 meters.

As described in Section 2.4 of the WQP&MP, the vessel track discharge route consists of vessel track lines running in a north/south direction and each track line is anticipated to be approximately 1.25 miles long (as shown in Figure 1.2 of the WQP&MP). As put forth in the written correspondence from Ms. Clynda A. Case of the Alaska Department of Environmental Conservation (ADEC) to Mr. Tom Enlow of UniSea, dated February 9, 2016, water quality grab samples will be taken at three locations at ⅓-mile intervals along the discharge route (ADEC 2016). Therefore, in order to collect samples that are representative of the discharge area, water quality grab samples will be collected at approximately 0.4 miles, 0.8 miles, and 1.25 miles, centered generally on the north/south axis of the at-sea disposal site (this assumes the track lines remain 1.25 miles in length).

All proposed field locations are approximate target locations, but may be modified slightly based on field conditions of final length of the discharge route.

3.2 LOCATION AND SAMPLE IDENTIFICATION

Each water quality sample will be assigned a unique alphanumeric identifier. The naming convention that will be used includes the “sample location-depth interval.” For example, a water quality grab sample collected during the pre-discharge event (“PRE”) from the second location that is ⅔mile from the start of the discharge route (“DR”) in the top depth interval (“01”) would be labeled PRE-DR02-01.

3.3 WATER QUALITY GRAB SAMPLING PROCEDURES

Water quality grab samples for both field measurement and chemical analyses will be collected from a Niskin bottle. The Niskin bottle is a plastic cylinder with stoppers at each end, connected by an elastic cord. The stoppers are held open by plastic cords attached to a release mechanism. Two clamps on the side of the cylinder are used to attach the bottle to a hydrographic line (usually a 3/16-inch steel cable or rope with a 10-pound weight at the end) so that it can be lowered to a discreet depth in the water. When a small weight (“messenger”) encircling the hydrographic line is released down the line, it strikes the release mechanism, resulting in the two stoppers being pulled into the ends of the cylinder, thereby trapping water from that depth.

Once the tripped Niskin bottle is brought aboard the sampling platform, the water is discharged into the appropriate pre-labeled sample storage containers and packed in ice until delivery of samples to the analytical laboratory.

The sampling operation is performed by two people: Sampler A operates the winch and assists loading the Niskin bottles on the line as necessary, while Sampler B loads the bottles on the line, dispatches the messenger, and discharges the Niskin contents into appropriate sample storage containers. Each of the sample storage bottles received from the laboratory is filled completely, taking care not to overfill the container. In particular, sample bottles with a predetermined volume of preservative (e.g., sulfuric acid for ammonia) should not be overfilled and cause a loss/dilution of the preservative. The steps for water sampling using a Niskin bottle are outlined below:

1. Before starting, record the following information on the Water Quality Monitoring Form (Appendix D of the WQP&MP):
    a. Vessel operator's name and company, sampling method (i.e., Niskin bottle), equipment make/model, equipment measurements (i.e., sampler size, volume).
    b. Sampler's name, date, project, weather conditions, sampling location ID.
2. Maneuver the vessel to the proposed sampling location. Locations will be, in most situations, pre-determined in latitude and longitude, or northings and eastings referenced to the appropriate state plane system for the site, using the hand-held or vessel-mounted Digital Global Positioning System (DGPS) receiver referenced to NAD 83.
3. Mount the Niskin bottle firmly onto the hydrographic line, securing it tightly as to avoid slippage on the line.
4. Cock the Niskin bottle end caps open so that the bottle will allow water to freely flow through as it descends to the desired sampling depth.
5. Decontaminate the inside and outside of the Niskin bottle with a solution of deionized water and Alcolnox or similar detergent, and a long-handled beaker brush taking care to scrub the entire surface to prevent cross-contamination between samples.
6. Rinse the detergent off the Niskin bottle by spraying it with distilled or deionized water until the water runs clear (i.e., bubbles and detergent residue are completely removed from the bottle).
7. Deploy the Niskin bottle into the water and pay out enough hydrographic line to reach the desired sampling depth. Determining the proper depth can be done using a meter wheel on the winch system, or depth markings on the hydrographic line. Once the Niskin is at the desired depth, attach the messenger onto the hydrographic line.
8. Send the messenger down the hydrographic line and record the time and depth of sample collection in the field notebook.
9. Record the actual sample location coordinates in the field notebook.

10. Retrieve the Niskin bottle by raising it at a controlled rate and guide the sampler on board, taking care not to knock the end caps against the vessel, which may cause sample loss.
11. Once on-board the vessel, secure the Niskin bottle with a tag line either held by a staff member or secured to a fixed point on the vessel (i.e., a cleat or rail) or other means to prevent the bottle from swinging while suspended. The Niskin bottle can also be secured to a mounting rack on the vessel, if available.
12. Once secured, open the airlock on the Niskin bottle by unscrewing the small valve located near the top of the Niskin bottle.
13. Collect water for water quality meter field measurements. Using the nipple located near the bottom of the Niskin bottle, press the nipple firmly inward to open the valve and fill the plastic water quality meter cup, and place the meter in the water sample to collect temperature, salinity, DO, pH, and turbidity. Record measurements on the Water Quality Monitoring Form.
14. Close the valve in-between filling sample storage containers to prevent sample loss.
15. Collect water for chemical analyses. Press the nipple located near the bottom of the Niskin bottle firmly inward to open the valve and fill appropriate laboratory-supplied containers.
16. When a sufficient volume has been collected from the Niskin bottle, re-cock the end caps.
17. Have the boat operator maneuver the vessel to the next sampling location and repeat Steps 1 through 16 until all samples are collected.

3.4 MONITORING EQUIPMENT

Equipment to be used for the water quality sampling will include the following:

- Water quality meter: Horiba U-50 or YSI 6920 Sonde (or other suitable equipment)[1]
- Niskin bottle and all associated sampling supplies
- Field logbook and monitoring forms
- Deionized water and Alconox, or similar detergent, for decontaminating monitoring equipment
- Personal protective equipment
- Camera
- Cellular phone and project contact phone numbers

[1] Due to the remoteness of the site, two water quality instruments will be on the vessel in case of instrument failure or calibration issues.

The water quality meter will be properly operated, calibrated, and maintained by qualified personnel before each use according to the manufacturer's guidelines and recommendations. All field analyses will be recorded in a logbook and the specific person who calibrated the equipment will be recorded.

3.5 SAMPLE DOCUMENTATION AND FIELD NOTES

As part of sample collection activities, all pertinent information will be included on the Water Quality Monitoring Form (Appendix D of the WQP&MP) including calibration information, water quality field parameters, and chemical analysis documentation.

3.6 SAMPLING EQUIPMENT DECONTAMINATION

The Niskin bottle will be decontaminated after each sample is collected in order to prevent cross-contamination. To decontaminate the Niskin bottle, a solution of deionized water and Alconox (or similar detergent) will be used along with a long-handled brush to scrub the entire inside and outside surface of the Niskin bottle. A pressurized sprayer filled with distilled or deionized water will be used to rinse all detergent residues from both inside and outside the Niskin bottle before it is deployed to collect the next sample.

3.7 FIELD QUALITY ASSURANCE SAMPLES

Field QA samples will be used to evaluate the efficiency of field decontamination procedures. Field duplicate samples will be collected at a frequency of one per event and submitted as a blind duplicate with a fictitious sample name to the laboratory.

3.8 SAMPLE HANDLING AND CUSTODY DOCUMENTATION

Sample possession and handling must be traceable from the time of sample collection, through laboratory and data analysis, to the time sample results are reported. A Water Quality Monitoring Form and field logbook entry will be completed for each location occupied and each sample collected.

3.8.1 Sample Handling

To control the integrity of the samples during transit to the laboratory and during holding prior to analysis, established preservation and storage measures will be taken. The NewFields Field QA Officer will check all container labels, custody form entries, and logbook entries for completeness and accuracy at the end of each sampling day.

Sample containers will be labeled at the time of sampling, clearly identifying the project name, project number, location name, sample number, sampler's initials, date and time of collection, analysis to be performed, and preservative, if used.

Table C.1 summarizes the analytical method, reporting limit, bottle type, preservative, and holding time for each analyte.

3.8.2 Sample Chain-of-Custody and Transportation

Technical field staff will be responsible for all sample tracking and custody procedures in the field, and chain-of-custody procedures will be strictly followed. The NewFields Field QA Officer will be responsible for final sample inventory and will maintain sample custody documentation.

At the end of the sampling day, and prior to transfer, Chain-of-Custody Form entries will be made for all samples. All Chain-of-Custody Forms will be completed in indelible ink. All sample information (i.e., sample names, sampling date/time, sample matrix, number of containers, etc.), including all required analyses, will be logged onto a Chain-of-Custody Form prior to formal transfer of sample containers to the analytical laboratory. The Chain-of-Custody Forms will be completed and placed inside each individual cooler.

Any time possession of the samples is transferred, the individuals relinquishing and receiving the samples will respectively sign, date, and note the time of transfer on the Chain-of-Custody Form. This form also documents the transfer of custody of samples from the sampler to the laboratory.

Prior to transport, sample containers will be wrapped and securely packed inside the cooler with ice packs or crushed ice by the field technician. Samples will be shipped to the laboratory under chain-of-custody protocol following completion of sampling activities on the day of sample collection.

This page intentionally left blank.

4.0 Chemical Laboratory Analyses and Quality Assurance Objectives

This QAPP/SAP establishes QC procedures and QA criteria to meet the data quality objectives (DQOs) set forth for the field activities to be conducted as part of the water quality monitoring. The overall QA objective is to specify laboratory procedures for ensuring data quality is maintained for field sampling, chain-of-custody protocol, laboratory analyses, and reporting. Table C.1 presents the target reporting limits for each analytical method, as performed by SGS. These reporting limits are goals only, insofar as instances may arise where high sample concentrations, non-homogeneity of samples, or matrix interferences preclude achieving the desired reporting limit and associated QC criteria. In such instances, the laboratory will report the reason for any deviation from these reporting limits.

4.1 LABORATORY ANALYSES

All samples will be shipped to SGS in Anchorage, Alaska, for chemical analysis. Water quality grab samples will be analyzed for the following analytical parameters:

- Biological oxygen demand (BOD; 5-day test)
- Total suspended solids (TSS)
- Alkalinity
- Ammonia (total nitrogen)
- Total sulfides

Refer to Table 3.1 for the analytical methods and reporting limits

4.2 LABORATORY QUALITY ASSURANCE OBJECTIVES

Analytical DQOs include obtaining data that are technically sound and properly documented, having been evaluated against established criteria for the principle data quality indicators (i.e., precision, accuracy, representativeness, completeness, and comparability) as defined in Ecology and USEPA guidance (Ecology 2004 and USEPA 1998).

The quality of analytical data generated is assessed by the frequency and type of internal QC checks developed for analysis type and method. Laboratory results will be evaluated by reviewing analytical results of method blanks, matrix spikes (MS), duplicate samples, laboratory control samples (LCSs), calibrations, performance evaluation samples, and interference checks as specified by the specific analytical methods.

4.3 QUALITY CONTROL PROCEDURES

4.3.1 Field Quality Control Procedures

A rinsate blank QC sample will also be collected for each sampling event on the non-dedicated field equipment (i.e., Niskin bottle) to ensure field decontamination procedures are effective. All

field QC samples will be documented in the field logbook and verified by the QA Manager or designee. A blind field duplicate will be collected during each event to evaluate the efficiency of field decontamination procedures, variability from sample handling, and site heterogeneity.

4.3.2 Laboratory Quality Control Procedures

Laboratory Quality Control Criteria. Results of the QC samples from each sample group will be reviewed by the analyst immediately after a sample group has been analyzed. The QC sample results will then be evaluated to determine whether control limits were exceeded. If control limits are exceeded in the sample group, corrective action (e.g., method modifications followed by reprocessing the affected samples) will be initiated prior to processing a subsequent group of samples.

All primary chemical standards and standard solutions used in this project will be traceable to documented and reliable commercial sources. Standards will be validated to determine their accuracy by comparison with an independent standard. Any impurities identified in the standard will be documented.

The following paragraphs summarize the procedures that will be used to assess data quality throughout sample analysis.

Laboratory Duplicates. Analytical duplicates provide information on the precision of the analysis and are useful in assessing potential sample heterogeneity and matrix effects. Analytical duplicates are subsamples of the original sample that are prepared and analyzed as a separate sample. A minimum of 1 duplicate will be analyzed per sample group or 1 for every 20 samples, whichever is more frequent. When there are fewer than 20 samples, a laboratory duplicate will still be collected. When there are more than 20 samples, a second laboratory duplicate will be collected.

Matrix Spikes and Matrix Spike Duplicates. Analysis of MS samples provides information on the extraction efficiency of the method on the sample matrix. By performing matrix spike duplicate (MSD) analyses, information on the precision of the method is also provided. A minimum of 1 MS/MSD will be analyzed for every sample group or 1 for every 20 samples, whichever is more frequent. MS/MSD analyses will be performed on project-specific samples (i.e., batch QC using samples from other projects is not permitted). When there are fewer than 20 samples, a MS/MSD will still be analyzed. When there are more than 20 samples, a second MS/MSD will be analyzed.

Laboratory Control Samples and Laboratory Control Sample Duplicate. An LCS is a method blank sample carried throughout the same process as the samples to be analyzed, with a known amount of standard added. The blank spike compound recovery assesses analytical accuracy in the absence of any sample heterogeneity or matrix effects. All LCS and laboratory control sample duplicate (LCSD) data will be reported. The LCS/LCSD will be performed once per analysis batch.

Surrogate Spikes. All project samples will be spiked with appropriate surrogate compounds as defined in the analytical methods. Surrogate recoveries will be reported by the laboratories; however, no sample result will be corrected for recovery using these values.

Method Blanks. Method blanks are analyzed to assess possible laboratory contamination at all stages of sample preparation and analysis. A minimum of 1 method blank will be analyzed for every extraction batch or 1 for every 20 samples, whichever is more frequent

This page intentionally left blank.

5.0 Data Reduction, Validation, and Reporting

Initial data reduction, evaluation, and reporting at the laboratory will be carried out as described in the appropriate analytical protocols and the laboratory QA manuals. QC data resulting from methods and procedures described in this document will also be reported.

5.1 DATA REDUCTION AND REPORTING

The laboratory will be responsible for internal checks on data reporting and will correct errors identified during the QA review. Close contact will be maintained with the laboratories to resolve any QC problems in a timely manner. The analytical laboratories will be required, where applicable, to report the following:

- **Project Narrative.** This summary, in the form of a cover letter, will discuss problems, if any, encountered during any aspect of analysis. This summary should discuss, but not be limited to, QC, sample shipment, sample storage, and analytical difficulties. Any problems encountered (actual or perceived) and their resolutions will be documented in as much detail as necessary.
- **Sample Identification Codes.** Records will be produced that clearly match all blind duplicate QA samples with laboratory sample identification codes.
- **Chain-of-Custody Records.** Legible copies of the custody forms will be provided as part of the data package. This documentation will include the time of receipt and condition of each sample received by the laboratory. Additional internal tracking of sample custody by the laboratory will also be documented.
- **Sample Results.** The data package will summarize the results for each sample analyzed. The summary will include the following information when applicable:
    - Field sample identification code and the corresponding laboratory identification code:
        - Sample matrix.
        - Date of sample extraction.
        - Date and time of analysis.
        - Weight and/or volume used for analysis.
        - Final dilution volumes or concentration factor for the sample.
        - Identification of the instrument used for analysis.
        - Method reporting and quantitation limits.
    - Analytical results reported with reporting units identified.
    - All data qualifiers and their definitions.
    - Electronic data deliverables.

- **Quality Assurance/Quality Control Summaries.** This section will contain the results of all QA/QC procedures. Each QA/QC sample analysis will be documented with the same information required for the sample results (refer to above). No recovery or blank corrections will be made by the laboratory.
- **Method Blank Analysis.** The method blank analyses associated with each sample and the concentration of all compounds of interest identified in these blanks will be reported.
- **Surrogate Spike Recovery.** All surrogate spike recovery data will be reported. The name and concentration of all compounds added, percent recoveries, and range of recoveries will be listed.
- **Matrix Spike Recovery.** All MS recovery data will be reported. The name and concentration of all compounds added, percent recoveries, and range of recoveries will be listed. The relative percent difference (RPD) for all duplicate analyses will be reported.
- **Matrix Duplicate.** The RPD for all matrix duplicate analyses will be reported.
- **Laboratory Control Samples and Laboratory Control Sample Duplicate.** All LCS/LCSD will be reported. The RPD for all duplicate analyses shall be reported.
- **Blind Field Duplicates.** Blind field duplicates will be reported in the same format as any other sample. RPDs will be calculated for duplicate samples and evaluated as part of the data quality review.

5.2 DATA VALIDATION

Once data are received from the laboratory, a number of QC procedures will be followed to provide an accurate evaluation of the data quality. Specific procedures will be followed to assess data precision, accuracy, and completeness.

A data quality review of the analytical data will follow USEPA National Functional Guidelines in accordance with the QAPP limits (USEPA 2014a and 2014b). All chemical data will be reviewed with regard to the following:

- Chain-of-custody/documentation.
- Sample preservation and holding times.
- Instrument performance (calibration, tuning, sensitivity).
- Method blanks.
- Reporting limits.
- Surrogate recoveries.
- LCS/LCSD recoveries.
- Laboratory and field duplicate RPDs.

The data validation summary report will be presented as an appendix to the Waste Remediation Completion Report.

This page intentionally left blank.

6.0 References

Alaska Department of Environmental Conservation (ADEC). 2016. Letter to Tom Enlow, UniSea, Inc., from ADEC re: *Unisea short-term water quality variance application for the discharge of dredged seafood residues in Unalaska Bay, Alaska.* 9 February.

Floyd|Snider. 2015. *Waste Remediation Plan*. Prepared for UniSea, Inc. 16 November.

U.S. Environmental Protection Agency (USEPA). 1998. *USEPA Guidance Document for Quality Assurance Project Plans*. Publication EPA QA/G-5, EPA/600/R-98/018.

_____. 2014a. *National Functional Guidelines for Inorganic Superfund Data Review*. OSWER 9355.0-131, EPA-540-R-013-001. August.

_____. 2014b. *National Functional Guidelines for Superfund Organic Methods Data Review*. OSWER 9355.0-132, EPA-540-R-014-002. August.

Washington State Department of Ecology (Ecology). 2004. *Guidelines for Preparing Quality Assurance Project Plans for Environmental Studies.* Publication No. 04-03-030. Revision of Publication No. 01-03-003. July.

UniSea, Inc.

Water Quality Protection and Monitoring Plan

Appendix C
Quality Assurance Project Plan and Sampling and Analysis Plan

Tables

Table C.1
Analytes, Methods, Reporting Limits, Bottle Type, Preservation, and Holding Times

Analyte	Method	Reporting Limit	Bottle Type	Preservative	Holding Time
Biological Oxygen Demand (BOD; 5-day test)	SM 5210B	2 mg/L	(1) 1-L HDPE	None, cool to <6 °C	48 hours[1]
Total Suspended Solids (TSS)	SM 2540D	1 mg/L	(1) 1-L HDPE	None, cool to <6 °C	7 days
Alkalinity (total as $CaCO_3$)	SM 2320B	10 mg/L	(1) 125-mL HDPE	None, cool to <6 °C	14 days
Ammonia (total N)	SM 4500 G	0.1 mg/L	(1) 250-mL HDPE	H_2SO_4, cool to <6 °C	28 days
Total Sulfides[2]	SM 4500S-D	0.1 mg/L	(1) 125-mL HDPE	NaOH+ZnAC, cool to <6 °C	7 days

Notes:

1 In order to meet the required holding time of 48 hours, at the end of the sampling day, the cooler will be overnight shipped to SGS North America, Inc. laboratory in Anchorage, Alaska, under standard chain-of-custody procedures.

2 Total sulfides will be analyzed instead of hydrogen sulfides, per coordination with ADEC on February 22, 2016.

Abbreviations:

°C	Degrees Celsius
$CaCO_3$	Calcium carbonate
H_2SO_4	Sulfuric acid
HDPE	High-density polyethylene
L	Liter
mg/L	Milligrams per liter
mL	Milliliter
NaOH	Sodium hydroxide
ZnAC	Zine acetate

UniSea, Inc.

Water Quality Protection and Monitoring Plan

Appendix D
Sea Surface Visual Monitoring Log and Water Quality Monitoring Form

Sea Surface Visual Monitoring Log

Monitoring of the sea surface will occur during discharge of dredged material at the at-sea disposal site in outer Unalaska Bay. This visual monitoring will be conducted to determine compliance with Water Quality Standards and project permit conditions, and to document observations of, or incidents involving, threatened or endangered species. This monitoring log has been adapted from an example provided by the Alaska Department of Conservation (ADEC), and expanded to include additional points of observation, in accordance with the U.S. Environmental Protection Agency (USEPA)-approved Waste Remediation Plan and Water Quality Variance Application.

This Sea Surface Visual Monitoring Log will be completed for each discharge event, which are expected to occur once per two calendar days, on average, throughout construction. Copies of the completed monitoring logs will be provided to ADEC along with the laboratory analytical results following the post-discharge sampling event, within approximately 1 month of construction completion.

Water Quality Variance Permit No.:		
Project Name:	**UniSea Seafood Waste Remediation and Discharge in Outer Unalaska Bay**	
Observer		
Date and start/stop time		
Weather conditions		
Tide cycle		
Estimated volume of dredged material discharged		
Start/end positions of vessel track lines	Northings:	Eastings:
Estimated area of continuous films, sheens, or mats of foam and the probable cause		
If there is evidence of seafood waste leaking from disposal barge in transit, explain actions taken to prevent additional release and document that ADEC was notified		
Number of Steller sea lion, Steller's eider, spectacled eider, northern sea otter, and short-tailed albatross (include notes if injured/dead, and probable cause)		
Other pertinent visual observations		

Water Quality Monitoring Form

Monitoring Personnel: _____ Date: _____

Start Time of WQ Monitoring: _____

Current Field Conditions

Weather: _____ Temperature: _____

Any Atypical/Specific Water Body Observations? (Y/N—Describe): _____

Daily Water Quality Meter Calibration Performed? (Y/N—Describe): _____

Water Quality Monitoring Summary

Type of Monitoring: Pre-Discharge ❑ Post-Discharge ❑ Estimated Discharge Route Length:_____		**Water Quality Monitoring Location (Taken at ⅓ intervals along the Discharge Route)**		
		Location 1	**Location 2**	**Location 3**
Station Location (State Plane Alaska 10 FIPS NAD 83)	Northing:			
	Easting:			
Station Monitoring Time				
Tidal Status (Ebb, Flood, or Slack Tide)				
Measurements for Parameters Measured in the Field				
pH (standard units)	-10 M (-33 ft)			
	-60 M (-197 ft)			
	-120 M (-394 ft)			
Turbidity (NTU)	-10 M (-33 ft)			
	-60 M (-197 ft)			
	-120 M (-394 ft)			
Temp (C)	-10 M (-33 ft)			
	-60 M (-197 ft)			
	-120 M (-394 ft)			
Dissolved Oxygen (mg/L)	-10 M (-33 ft)			
	-60 M (-197 ft)			
	-120 M (-394 ft)			
Salinity (ppt)	-10 M (-33 ft)			
	-60 M (-197 ft)			
	-120 M (-394 ft)			

Water Quality Grab Samples for Analytes Measured at the Laboratory				
Water Quality Grab Sample Information (Sample IDs and Analytes)	-10 M (-33 ft)	**Sample ID (circle):** PRE-DR01-01 or POST-DR01-01 **Sample Time:** _____ **Analyzed (circle):** BOD, TSS, Alkalinity, Ammonia, Total Sulfides	**Sample ID (circle):** PRE-DR02-01 or POST-DR02-01 **Sample Time:** _____ **Analyzed (circle):** BOD, TSS, Alkalinity, Ammonia, Total Sulfides	**Sample ID (circle):** PRE-DR03-01 or POST-DR03-01 **Sample Time:** _____ **Analyzed (circle):** BOD, TSS, Alkalinity, Ammonia, Total Sulfides
	-60 M (-197 ft)	**Sample ID (circle):** PRE-DR01-02 or POST-DR01-02 **Sample Time:** _____ **Analyzed (circle):** BOD, TSS, Alkalinity, Ammonia, Total Sulfides	**Sample ID (circle):** PRE-DR02-02 or POST-DR02-02 **Sample Time:** _____ **Analyzed (circle):** BOD, TSS, Alkalinity, Ammonia, Total Sulfides	**Sample ID (circle):** PRE-DR03-02 or POST-DR03-02 **Sample Time:** _____ **Analyzed (circle):** BOD, TSS, Alkalinity, Ammonia, Total Sulfides
	-120 M (-394 ft)	**Sample ID (circle):** PRE-DR01-03 or POST-DR01-03 **Sample Time:** _____ **Analyzed (circle):** BOD, TSS, Alkalinity, Ammonia, Total Sulfides	**Sample ID (circle):** PRE-DR02-03 or POST-DR02-03 **Sample Time:** _____ **Analyzed (circle):** BOD, TSS, Alkalinity, Ammonia, Total Sulfides	**Sample ID (circle):** PRE-DR03-03 or POST-DR03-03 **Sample Time:** _____ **Analyzed (circle):** BOD, TSS, Alkalinity, Ammonia, Total Sulfides

Notes:
FIPS = Federal Information Processing Standard
State plane coordinates in feet

Any unusual conditions or critical activities that could have impacted water quality? _____

_____

Were any photographs taken as supporting documentation? (Y/N—Describe): _____

_____

_____

Attachment 4
Pre- and Post-Dredge Seafloor Survey Plan and Quality Assurance Project Plan

UniSea, Inc.

Pre- and Post-Discharge Seafloor Survey Plan and Quality Assurance Project Plan

Prepared for:

UniSea, Inc.
Dutch Harbor Facility
P.O. Box 92008
Dutch Harbor, Alaska 99692

For Submittal to:

Alaska Dept. of Environmental Conservation
Wastewater Discharge Authorization Program
555 Cordova Street, 3rd Floor
Anchorage, Alaska 99501-2617

March 3, 2016

Prepared by:

NewFields
115 2nd Ave N., Suite 100
Edmonds, WA 98020

FLOYD | SNIDER
strategy • science • engineering
601 Union St., Suite 600
Seattle, WA 98101

The quality assurance project plan (QAPP) has been prepared according to guidance provided in EPA Requirements for Quality Assurance Project Plans (EPA QA/R-5,EPA/240/B-01/003) March 2001 to ensure that environmental and related data collected, complied and or generated for this project are complete, accurate and the type, quality and quantity required for their intended use.

Title and Approval Page:

Unisea Pre- and Post-Discharge Survey Plan and Quality Assurance Project Plan Unalaska Bay, Alaska

March 3, 2016

Alaska Department of Environmental Conservation	Clynda A. Case	Date
UniSea Director of Environmental Compliance, Safety, and Security	Gregg M. Bishop	Date
Floyd|Snider Project Manager	Jessi Massingale	Date
NewFields Project Manager	John Nakayama	Date

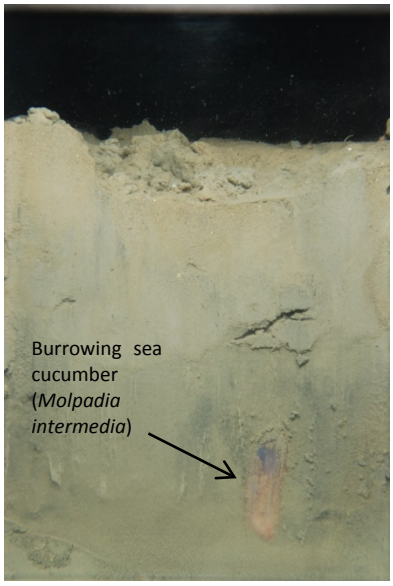

Example Sediment Profile Image (SPI)

Example Plan View (Surface) Image

Table of Contents

1.0 Introduction 1
2.0 Project Organization 2
2.1 PROJECT MANAGEMENT AND OVERSIGHT 2
2.2 QUALITY ASSURANCE RESPONSIBILITIES 3
2.3 PROBLEM DEFINITION/BACKGROUND 3
2.4 PROJECT/TASK DESCRIPTION AND SCHEDULE 3
2.5 DATA QUALITY OBJECTIVES AND CRITERIA 4
2.6 DOCUMENTATION AND RECORDS 5
2.6.1 Field Notebooks 5
2.6.2 SPI Documentation 6
2.6.3 Project Records 7
2.7 SPECIAL TRAINING AND CERTIFICATION 7
3.0 Data Generation and Acquisition 8
3.1 SAMPLING PROCESS DESIGN 8
3.2 SAMPLING METHODS 8
3.2.1 Vessel Positioning 8
3.2.2 Sediment Profile Imaging and Plan View Photography 8
3.5 EQUIPMENT DECONTAMINATION 9
3.6 ANALYTICAL METHODS 10
3.6.1 Sediment Profile Image Analysis 10
3.6.2 Plan View Image Analysis 10
3.7 QUALITY CONTROL 11
3.7.1 SPI Field Survey QC 11
3.7.2 SPI Image Analysis QC 11
3.7.3 Instrument Testing, Inspection, and Maintenance 12
3.7.4 Instrument Calibration and Frequency 12
3.7.5 Equipment, Supplies, and Consumables 12
3.8 DATA EVALUATION AND REPORTING 13
3.8.1 Evaluation of Sediment Profile and Plan View Imaging Results 13

3.8.2 Data Reporting 13
3.9 NON-DIRECT MEASUREMENTS 14
3.10 DATA MANAGEMENT 14
3.10.1 Electronic Data 14
3.10.2 Field Logs 14
3.10.3 Corrections to Documentation 14
4.0 Assessments/Oversight 15
4.1 ASSESSMENTS AND RESPONSE ACTIONS 15
4.2 REPORTS TO MANAGEMENT 16
5.0 Data Review and Evaluation 17
5.1 DATA REVIEW, VERIFICATION, AND VALIDATIONS 17
5.2 VERIFICATION AND VALIDATION METHODS 17
5.3 RECONCILIATION WITH USER REQUIREMENTS 17
6.0 References 18

List of Tables

Table 1 SPI and PV Station Coordinates

List of Figures

Figure 1 Proposed At-Sea Disposal Site SPI and PV Location
Figure 2 SPI and PV Camera System
Figure 3 Schematic Diagram of the Sediment Profile Camera and Sequence of Operation on Deployment

List of Appendices

Appendix A SPI Analysis Parameters

List of Acronyms and Abbreviations

Acronym/ Abbreviation	Definition
AAC	Alaska Administrative Code
ADEC	Alaska Department of Environmental Conservation
CD	Consent Decree
cm	Centimeter
DGPS	Differential Global Positioning System
DQI	Data Quality Indicator
DVD	Digital Video Disc
EPA	Environmental Protection Agency
FM	Field Manager
GIS	Geographic Information System
lb	Pound
mm	Millimeter
NAD	North American Datum
NPDES	National Pollutant Discharge Elimination System
OSI	Organism-Sediment Index
PM	Project Manager
PPE	Personal Protective Equipment
PV	Planview
QA	Quality Assurance
QAO	Quality Assurance Officer
QAPP	Quality Assurance Project Plan
QC	Quality Control
REMOTS	Remote Ecological Monitoring of the Seafloor
RPD	Redox Potential Discontinuity
RTK	Real-Time Kinematic (DGPS)
R/V	Research Vessel
SPI	Sediment Profile Imaging
WQV	Water Quality Variance
WRP	Waste Remediation Plan

Distribution List

Name & Title	Phone, Fax & E-mail	Mailing Address
Alaska Department of Environmental Conservation		
Clynda A. Case Seafood and Aquaculture Permitting Section Lead	(907) 376-1865 (office) (907) 376-2382 (fax) clynda.case@alaska.gov	Division of Water Wastewater Discharge Authorization Program 1700 E. Bogard Rd. Bldg. B, Suite 103 Wasilla, AK 99654
UniSea Inc.		
Gregg M. Bishop CSP Director of Environmental Compliance, Safety and Security	(907) 581-7264 (DH office) (907) 359-7264 (mobile) (425) 861-5324 (Redmond office) gregg.bishop@unisea.com	UniSea, Inc. PO Box 920008 Dutch Harbor, AK 99692
Floyd|Snider		
Jessi Massingale Associate Principal Project Manager	(206) 292-2078 (office) (206) 682-7867 (fax) jessi.massingale@floydsnider.com	Floyd|Snider 601 Union St, Suite 600 Seattle, WA 98101
NewFields		
John Nakayama Senior Scientist Project Manager	(425) 967-5285 ext. 102 (office) (206) 276-0257 (cell) jnakayama@newfields.com	NewFields 115 2nd Ave N., Suite 100 Edmonds, WA 98020

1.0 Introduction

UniSea Inc. (UniSea) operates a fish processing plant located in Dutch Harbor, Alaska, with permitted outfalls that allow them to discharge wastewater, solids, and residues from the processing of seafood and related support activities in accordance with NPDES Permit #AK002865-7 from their seafood processing plant (USEPA 2003).

Under a Consent Decree between the U.S. Environmental Protection Agency (USEPA), State of Alaska, and UniSea, unauthorized seafood waste piles present on the seafloor adjacent to the UniSea Unalaska facility are proposed for removal by dredging, implementation of source controls, and monitored natural recovery (MNR) (USEPA 2011, RPS and NewFields 2014, Floyd|Snider 2015). UniSea prepared a Waste Remediation Plan (WRP), as required by the USEPA, to implement the dredging of the seafood waste piles, dewater the waste, and then transport and discharge the material in outer Unalaska Bay (Floyd|Snider 2015).

The State of Alaska Department of Environmental Conservation (ADEC) has determined that a short-term Water Quality Variance (WQV) per 18 AAC 70.200 is necessary for the at-sea discharge of seafood wastes in state waters. As part of the WQV, ADEC has requested that UniSea provide additional information on the existing benthic habitat at the proposed at-sea disposal site in outer Unalaska Bay. Currently, there is limited information on benthic conditions at the site. The WRP reports that accumulation of the seafood waste is not expected to be concentrated in any one area as it is being discharged, but solids residues may be deposited on the seafloor.

This Pre- and Post-Discharge Seafloor Survey Plan has been prepared as part of the submittal for the WQV application in order to evaluate the existing baseline benthic habitat conditions at the proposed at-sea disposal site, and evaluate conditions at the site following completion of at-sea discharges of the seafood waste. Due to the water depths at the site, the Survey Plan will utilize Sediment Profile Imaging (SPI) and plan view imaging (PV) to capture digital images of seafloor sediment conditions, benthic habitat type, infaunal organism, and epibenthic organism presence. SPI and PV imaging has been approved for use by the USEPA at the UniSea seafood waste accumulation area (RPS and NewFields 2014), as well as other seafood processing waste accumulations in Udagak Bay for Icicle Seafoods (Germano 2007) and Akutan and Ketchikan for Trident Seafoods Corporation (Germano 2011), to assess benthic community habitat conditions and potential impacts from seafood waste. In addition to providing digital imaging of seafloor habitat features, computer image analysis of SPI and PV images provide numeric benthic indices that allow for the comparison of benthic habitat quality over time.

The Survey Plan and Quality Assurance Project Plan (QAPP) were developed following USEPA guidelines (USEPA 2001 and 2002) and gives specific terms, objectives, organization, and functional activities associated with the pre- and post-discharge seafloor surveys.

2.0 Project Organization

On behalf of UniSea, NewFields will perform field activities in support of pre- and post-discharge seafloor surveys at the at-sea disposal site. The project organization and the individuals responsible for the tasks required for the implementation of the Survey Plan and QAPP are listed below.

2.1 PROJECT MANAGEMENT AND OVERSIGHT

Ms. Clynda Case, Lead for Seafood and Aquacultural Facility Permitting, will be the primary point of contact for the ADEC. Ms. Case will be involved in the oversight of this project including:

- Reviewing, discussing, and approving the QAPP.
- Participating in QA reviews of the study.
- Interpretation of the results of the investigation.

Mr. Gregg Bishop will serve as UniSea's Project Manager and be the primary contact for UniSea. He will be involved in all aspects of this project including:

- Reviewing and discussing all aspects of the QAPP.
- Participating in QA reviews of the study.
- Coordinating project assignments & resources.

Ms. Jessi Massingale will serve as Floyd|Snider's Project Manager and will have overall responsibility for project implementation. She will report directly to UniSea's Project Manager and is responsible for technical quality control (QC) and project oversight. Ms. Massingale will be involved in all aspects of this project including:

- Reviewing, discussing, and approving the QAPP.
- Participating in QA reviews of the study.
- Interpretation of the results of the investigation.

Mr. John Nakayama will serve as the NewFields Project Manager and Field Survey Leader. He will be responsible for overall project coordination and planning as well as:

- Coordinating project assignments and establishing priorities and scheduling.
- Operation of the SPI and PV imaging systems in accordance with the methods outlined in this QAPP.
- Ensuring completion of all tasks, within established budgets and time schedules.
- Implementing corrective actions as necessary to comply with the QAPP.

- Preparing and/or reviewing preparation of project deliverables, including the QAPP and other materials developed to support the project.
- Providing support to ADEC, UniSea, and Floyd|Snider in interacting with the project team, technical reviewers, and others to ensure technical quality requirements are met in accordance with study design objectives.

2.2 QUALITY ASSURANCE RESPONSIBILITIES

Ms. Tessa Gardner-Brown of Floyd|Snider will be responsible for ensuring that all QA/QC procedures for this project are being followed. Her responsibilities will include:

- Providing support to NewFields and Floyd|Snider in preparation, review, and distribution of the QAPP.
- Monitoring QC activities to determine conformance.
- Report QC results and corresponding effect on overall data quality and results interpretation.

2.3 PROBLEM DEFINITION/BACKGROUND

The ADEC has determined that a short-term WQV per 18 AAC 70.200 is necessary for the at-sea discharge of seafood wastes in state waters. As part of the WQV, ADEC has requested that UniSea provide additional information on the existing benthic habitat at the proposed at-sea disposal site in outer Unalaska Bay. Currently, there is limited information on the seafloor at the site.

This QAPP has been designed to collect site-specific information necessary to characterize the benthic community at the at-sea disposal site. The objectives of the pre-discharge seafloor survey are to use SPI and PV imaging to document the existing baseline benthic habitat conditions, infaunal benthic community, and epibenthic community at the proposed at-sea disposal site. The objectives of the post-discharge seafloor survey are to evaluate the benthic habitat conditions at the site following completion of the seafood waste discharges, including deposition of seafood waste, if any, on the seafloor.

2.4 PROJECT/TASK DESCRIPTION AND SCHEDULE

Collection of quality SPI and PV data will be dependent on weather conditions at the site (which can affect survey vessel station keeping), ambient light conditions, and water clarity for PV imaging. The schedule and timing of the field operations will depend on ADEC approval of the WQV, survey vessel availability, and seasonal weather and conditions at the site. Currently, the pre-discharge seafloor survey is scheduled for the week of April 18, 2016 and expected to be completed in two days or less. The post-discharge seafloor survey is scheduled for the week of July 17, 2016, and expected to be completed in two days or less.

The pre- and post-discharge seafloor surveys will consist of SPI and PV imaging systems deployed from a survey vessel to collect digital images of the seafloor. The proposed survey vessel is the 43-foot research vessel (R/V) Miss Alyssa, based in Dutch Harbor, Alaska.

A suite of parameters from the SPI images will be measured that help describe the condition of the benthic infauna community (habitat quality) (see Section 3.6). Accumulation of seafood waste layers at the disposal site can also be measured in SPI images, although significant accumulations are not expected. Seafloor features (e.g., ripples, burrows) and epibenthic organisms observed on the seafloor in PV images will be documented, identified, and counted.

2.5 DATA QUALITY OBJECTIVES AND CRITERIA

The data quality objectives for this project are to ensure that the data are of known and acceptable quality so that the goal of the field event can be achieved. The quality objectives for this project include:

- Collection of data that adequately characterizes the seafloor uses for habitat, rearing, growth, or migration by fish, shellfish, other aquatic life, as well as documenting benthic habitat, sediment type, infaunal benthic community, and epibenthic community before and after the seafood waste disposal
- To the extent possible, collect and monitor data that is representative of site in-situ conditions.
- Use of standardized, repeatable data and sample collection procedures.
- Use of trained personnel to perform the data and sample collection and analyses.
- Equipment for parameters to be collected on site will be calibrated according to manufacturer's specifications.

Measurement performance criteria are quantitative statistics that are used to interpret the degree of acceptability or utility of the data to the user. These criteria, also known as data quality indicators (DQIs), include the following:

Precision is a measure of mutual agreement among individual measurements of the same property under prescribed conditions. Three replicate SPI images will be obtained at each station, and an average or median value will be calculated for each of the measured parameters (e.g., apparent redox potential discontinuity (RPD) depth, camera penetration depth, small-scale surface roughness, Organism-Sediment Index). It is not possible to specify acceptance criteria for precision or agreement among the values measured for the three replicate images; these values will reflect the small-scale (i.e., on the order of a few meters between individual drops of the camera onto the seafloor at each station) spatial heterogeneity or homogeneity, which is naturally present at a given station.

Accuracy is the degree to which an observed measurement agrees with an accepted reference or true value. SPI is a semi-quantitative sampling technique and no specific reference materials or standards exist that can be used to evaluate directly the accuracy of the collected data.

Representativeness expresses the degree to which data accurately and precisely represent an actual condition or characteristic at a particular sampling point. Representativeness is achieved by collecting samples representative of the matrix at the time of collection. For SPI, three replicate profile images will be collected and analyzed at each station.

Completeness refers to the amount of measurement data collected relative to that needed to assess the project's technical objectives. It is calculated as the number of valid data points achieved divided by the total number of data points requested by virtue of the study design. For this project, completeness objectives have been established at 95 percent.

Comparability is based on the use of established methods for the analysis of the selected physical testing parameters. Use of standard operating procedures for SPI image acquisition, analysis, and reporting ensures comparability among images obtained during different studies and among different times within the same study.

DQIs that cannot be expressed in terms of accuracy (e.g., SPI), precision, or completeness will be reported by fully describing the specified method; all other quality assurance requirements will still be fulfilled. Measurement performance criteria for data to be collected during this project are discussed in the Instrument Testing, Inspection, and Maintenance section and are shown in Table 2.

2.6 DOCUMENTATION AND RECORDS

A complete record of field activities will be maintained. Documentation necessary to meet QA objectives for this project include field notes and field forms, sample container labels, and chain-of-custody forms. The field documentation will provide descriptions of all sampling activities, sampling personnel, and weather conditions, and will record all modifications, decisions, and/or corrective actions to the study design and procedures identified in this QAPP.

2.6.1 Field Notebooks

All handwritten documentation must be legible and completed in permanent waterproof ink. Corrections must be marked with a single line, dated, and initialed. All documentation, including voided entries, must be maintained within project files.

The Field Manager will keep the field logbook(s) on site during field operations. Daily activities will be recorded in a bound field logbook of water-resistant paper. All entries will be made legibly, in indelible ink, and will be signed and dated. Information recorded will include the following:

- Date, time, place, and location of sampling;
- Onsite personnel and visitors;

- Daily safety discussion and any safety issues;
- Calibration and/or verification of field equipment (including make and model of equipment);
- Field measurements and their units; and
- Observations about site, location, and samples (i.e., weather, current, odors, appearance).

Field logbooks are intended to provide sufficient data and observations to enable participants to reconstruct events that occur during project field activities. Entries should be factual, detailed, and objective.

2.6.2 SPI Documentation

At the beginning of the survey, the time on the SPI digital camera will be synchronized with the time of the research vessel's navigation system. Each replicate SPI is identified by matching the "time stamp" recorded upon creation of each digital image file with the corresponding time and position recorded in the navigation system and/or in the written logbook. A position fix in the vessel's navigation system will be recorded for each of the three replicate camera drops at each SPI sampling stations. A written field logbook will be maintained and at each sampling station, the following information will be documented in the logbook:

- Time of each camera drop
- Replicate ID
- Frame Count
- Water Depth

At the end of each field day, the digital image files on the hard drive of the SPI laptop computer will be copied to removable storage media (DVD or external drive) to provide an electronic data backup.

Following completion of the survey, a NewFields scientist will operate a computer image analysis system and generate a series of measurements for each SPI image. The measurements collected from each SPI image using the computer image analysis system will be stored in preliminary and final electronic spreadsheets. An archive DVD will be created to store all the image files, image analysis measurement files, figures, and the spreadsheet of the exported analysis data. The images and data will also be stored on the NewFields computer server and backup in the Edmonds, WA office.

2.6.3 Project Records

The NewFields PM will maintain files, as appropriate, as repositories for information and data used in the preparation of any reports and documents during the project and will supervise the use of materials in the project files. The following information will be included:

- Any reports and documents prepared.
- Contract and work assignment information.
- QAPP.
- Communications (memoranda; internal notes; telephone conversation records; letters; meeting minutes; and all written correspondence among the project team personnel, subcontractors, suppliers, or others).
- Studies, reports, documents, and newspaper articles pertaining to the project.
- Special data compilations.
- Spreadsheet data files: SPI and PV measurements.
- All field records, including field sampling log notebooks containing all pertinent sampling data.

Copies of the field log notebook entries and data generated during the field surveys will maintained by NewFields for data compilation and entry. Formal reports submitted to ADEC that are generated from the data will be maintained at NewFields Edmonds, WA office in the central file (electronic and hard copy). The data reports will include a summary of the types of data collected, sampling dates, and any problems or anomalies observed during SPI and PV image collection.

If any change(s) in this QAPP are required during the study, a memo will be sent to each person on the distribution list describing the change(s), following approval by the appropriate persons. The memos will be attached to the QAPP.

All written records relevant to the sampling and processing of samples will be maintained at the NewFields Edmonds, WA office in the central file. Unless other arrangements are made, records will be maintained by NewFields for a minimum of 5 years following project completion at which time they will be transferred to UniSea Inc. in Dutch Harbor.

2.7 SPECIAL TRAINING AND CERTIFICATION

Due to the specialized nature of the skills required for the navigation and boat piloting in the project area, local vessel operators and UniSea employees familiar with the area and waters will be used to pilot and crew the vessel(s) used. NewFields personnel have experience and training in SPI and plan view image collection and computer image analysis. Because the individuals

selected to support this program have experience in their specialized areas, no additional training or certification is expected to be required under this scope of work.

3.0 Data Generation and Acquisition

3.1 SAMPLING PROCESS DESIGN

The pre- and post-discharge seafloor surveys event will each consist of the collection of triplicate SPI and PV imaging at 16 stations within the at-sea disposal site boundaries (Figure 1). Geographic coordinates and proposed sampling stations are provided in Table 1. For the post-discharge seafloor survey, additional locations may be added if seafood waste deposition is observed at stations located near the disposal site boundary to bound the aerial extent of deposition.

3.2 SAMPLING METHODS

This section describes the vessel positioning and SPI and plan view imaging methods. The sampling procedures presented in this QAPP may be subject to modification in the field to meet the objectives of this investigation and will be documented in field logs and in the Pre- and Post-Discharge Seafloor Survey Report that will be completed at the completion of survey effort.

3.2.1 Vessel Positioning

A Real-Time Kinematic-Differential Global Positioning (RTK-DGPS) will be used aboard the sampling vessel to obtain horizontal positioning accuracy of less than 1 foot. This entails receiving shore based station corrections (for example: City of Unalaska RTK corrections) of known horizontal and vertical coordinates and sending real-time corrections to an offshore (vessel mounted) RTK-DGPS rover unit. The offset between the RTK-DGPS receiver and winch cable, vessel heading (compass bearing), and water depth will be recorded in the Hypack navigation system aboard the vessel and final corrected position coordinates will be calculated. Overall positioning accuracy is expected to be ± 1 to 2 meters and no worse than ± 3 meters. The vertical datum will be the National Oceanic and Atmospheric Administration (NOAA) National Ocean Service mean lower low water. Vertical control will be provided by the ship's depth finder and corrected for tidal influence after sampling is completed.

To ensure the accuracy of the navigation system, a checkpoint will be located at a known point such as a pier face, dock, piling, or similar structure that is accessible by the sampling vessel. At the beginning and end of each day, the vessel will be stationed at the checkpoint, a DGPS position reading will be taken, and the reading will be compared with the known survey coordinates. The two position readings should agree, within the limits of survey vessel operational mobility, to within ± 2 meters.

3.2.2 Sediment Profile Imaging and Plan View Photography

Sediment Profile Images (SPI) will be collected using a Benthos model 3731 sediment-profile camera (Benthos, Inc., North Falmouth, MA) equipped with an Ocean Imaging Systems digital camera (Figure 2). The sediment-profile camera consists of a wedge-shaped prism with a Plexiglas face plate and a back mirror mounted at a 45 degree angle. Light is provided by an internal strobe.

The mirror reflects the image of the profile of the sediment-water interface up to a 35 mm camera that is mounted horizontally on top of the prism. The camera can obtain images of up to 20 cm of the upper sediment column in profile.

The camera prism is mounted on an assembly that can be moved up and down within a stainless steel frame by allowing tension or slack on the winch wire (Figure 3). As the camera is lowered, tension on the winch wire keeps the prism in the up position. Once the camera frame touches the bottom, slack on the winch wire allows the prism to vertically intersect the seafloor. The rate of fall of the prism (6 cm/second) is controlled by an adjustable passive hydraulic piston, which minimizes the disturbance of the sediment-water interface.

A trigger is tripped on impact with the bottom, activating a 13-second time-delay on the shutter release; this gives the prism a chance to obtain maximum penetration before a photograph is taken. After a photograph is taken, the camera is raised from the bottom, a wiper blade automatically cleans off any sediment adhering to the prism faceplate, and the strobes are recharged. The camera can then be lowered to collect another replicate image.

When the camera is brought to the surface, optical prism penetration is measured from a penetration indicator, which measures the distance the prism falls relative to the camera base. Two weight racks, each capable of holding 125 lb. of lead (in 25 lb. increments) can be loaded to increase penetration. If penetration is too great, adjustable stops, which control the distance the prism can descend, can be lowered, and “mud” doors can be attached to each side of the frame to increase the bearing surface of the entire unit.

A SubSea Chimaera MKII underwater still camera and light will be mounted to the SPI camera frame and used to collect downward-looking (i.e., “plan view”) photographs of the seafloor surface with each SPI sample. Two scaling lasers will also be utilized, which will project two dots that are separated by a constant distance (62.4 mm) within the field of view of the camera. A minimum of three replicate plan view images will be attempted from each station concurrent with SPI images. Plan view images (surface shot of the seafloor and sediment) will be collected just before the SPI camera touches the seafloor (1 to 2 meters above the bottom), using a lead ball and cable attached to a bounce trigger. The image quality for the second or third replicate images may be reduced due to turbidity in the water column following the first drop of the SPI camera frame at each station.

3.5 EQUIPMENT DECONTAMINATION

SPI and PV Imaging Equipment will be lowered to the seafloor to obtain digital images of the seafloor. Minor amounts of sediments can occasionally be adhered to the SPI camera frame, but will be washed from the frame using a seawater hose on the survey vessel, if needed. Equipment decontamination procedures for the SPI and PV systems are not required.

Personal Non-Disposable Field Equipment (i.e., boots, waterproof gloves, and garments) that come into contact with any site sediments will be rinsed with water and brushed clean prior to leaving the immediate vicinity of the survey area.

Disposable Protective Clothing and Sampling Equipment
Used PPE, such as protective Tyvek suits or gloves, and sampling related equipment such as paper towels and any packaging material that cannot be recycled, will be placed in plastic storage bags and disposed of as municipal waste.

3.6 ANALYTICAL METHODS

3.6.1 Sediment Profile Image Analysis

Analysis of the SPI images is conducted using the REMOTS (Remote Ecological Monitoring of the Seafloor) system. REMOTS is a formal and standardized technique for SPI image acquisition, image analysis, and interpretation (Rhoads and Germano, 1982 and 1986). Physical and biological parameters are measured directly from the digital SPI images using a computer image analysis system.

All data are edited and verified by a senior-level scientist before final data synthesis, statistical analyses, and interpretation. The specific SPI parameters include:

- Sediment grain size (major mode and range),
- Optical prism penetration depth,
- Surface boundary roughness,
- Mud clasts,
- Gas voids,
- Apparent Redox Potential Discontinuity (RPD) depth,
- Infaunal successional stage, and
- Calculation of the organism-sediment index (OSI).

SPI imaging can be used to determine the thickness of discrete layers of organic matter or surface fish waste, and to determine dredged material thickness at disposal sites. Specific details regarding each SPI parameter is described in Appendix A.

3.6.2 Plan View Image Analysis

Plan view images obtained at each site will catalogued and evaluated for flora and fauna content, identifying organisms at the lowest taxonomic level practical (generally species), and counts of observed plant and sea life (mammals, fish, crustaceans, echinoderms, etc.).

3.7 QUALITY CONTROL

3.7.1 SPI Field Survey QC

Images will be downloaded at regular intervals from the SPI camera to ensure successful image acquisition. The images will be reviewed in the field and an assessment made of their overall quality. An acceptable image will have adequate camera prism penetration reflective of the sediment conditions, adequate illumination, and an image in focus that allows identification of salient features in the SPI image. The following conditions may result in an unacceptable image and possible remedies are described:

- **Overpenetration** – Weight can be reduced in the camera frame, mud doors can be utilized, and another image attempted. The adjustable stops on the camera frame can be moved to decrease the distance the prism can descend.
- **Low or no prism penetration** – Additional weight can be added to the camera frame and another image attempted. Penetration may be limited in a hard or rocky bottom.
- **Pull out** – The camera prism was pulled away and was not flush with the sediment when the image was taken. Another image will be attempted.
- **Mud smears on prism faceplate** – Sediments may be sticky or the wiper blade may need adjustment. The wiper blade will be checked and another image attempted.
- **Black image** – No illumination of the sediment from the strobe light. The strobe will be checked and another image attempted.
- **Water shot** – The camera was triggered in the water column. Another image will be attempted.

3.7.2 SPI Image Analysis QC

A NewFields scientist will operate the computer image analysis system and generate a series of measurements for each SPI image. The data for each image are stored in a preliminary database, pending a review (QA check) by a senior level scientist. Upon completion of the initial analysis by the operator, the senior scientist uses the image analysis system to review all of the measurements performed on each image. Any changes or corrections made by the senior scientist are automatically flagged within each data file. The operator responsible for the initial analysis will review and accept any changes made by the senior scientist. Upon accepting the changes, the data are finalized in the image analysis database and the results are automatically exported into a Microsoft Excel spreadsheet file. This Excel file is used to create summary tables and is directly imported into ArcView GIS for mapping purposes.

An archive DVD will be created to store all the image files, image analysis measurement files, and the spreadsheet of the exported analysis data. The images and data will also be stored on the NewFields computer server and backup in the Edmonds, WA office.

3.7.3 Instrument Testing, Inspection, and Maintenance

As part of survey mobilization, all SPI imaging equipment will be “bench tested” to ensure all components of the system are operational and working properly before departure. Upon return from the survey, demobilization of all field equipment includes a fresh water rinse and servicing including inspection of o-rings and batteries. The equipment will be re-checked and, if it is not functioning properly, repairs are made at this time (e.g., replace electronic boards within the camera). Routine maintenance can also be accomplished at this time (e.g., replace prism window and/or mirror).

3.7.4 Instrument Calibration and Frequency

Prior to survey operations, the SPI camera head will be "bench-tested" to ensure that the camera is in focus and firing properly, and that the strobe is operational. The acceptance criteria for a bench test are that the strobe light must fire properly and at the correct time interval following activation of the trigger (usually set to 15 seconds), and the readout on the illuminated frame counter must show an advance by one. Spare camera parts and fully-charged battery packs will be stored aboard the vessel to ensure uninterrupted sample acquisition. The plan-view camera also will be tested to ensure that the camera is firing properly and the strobe is operational. Spare cameras and batteries for the plan-view camera and strobe will be available as backup.

A computer image analysis system is used to make linear measurements of the images, such as prism penetration depth, and is also used to detect differences in optical reflectance used to determine the apparent (RPD) depth. The image analysis system is calibrated at the beginning of each analysis day. A digital image is taken of a calibration slide that is marked in 1-cm increments. The image is measured using the image analysis system and the calibration data are stored.

3.7.5 Equipment, Supplies, and Consumables

The equipment and expendable supplies associated with the SPI sampling operations are listed below:

- Ocean Imaging Systems Model 3731 digital sediment profile camera system
- 1Cam underwater video/still camera and light system
- Synchronized camera and strobe trigger assembly
- 25 lb lead weights (2 sets of 5)
- 12 volt rechargeable battery packs
- "Mud" doors to prevent over penetration into soft sediment
- Glass cleaner and paper towels
- Distilled or spring water
- Swivel for hydrowire

- Field notebook and sampling logs stations
- SPI tool kit with stainless hardware spares

3.8 DATA EVALUATION AND REPORTING

This section describes the data analysis and reporting requirements for the data collection activities described in this QAPP.

3.8.1 Evaluation of Sediment Profile and Plan View Imaging Results

Benthic indices will be determined from SPI imaging to provide an assessment of the benthic habitat quality at the at-sea disposal site. These benthic indices will be compared between the pre- and post-discharge surveys to assess whether benthic habitat has been altered or impacted following the seafood waste disposal. Results will be summarized in tables and plotted on maps, as appropriate to compare. Depth of the apparent RPD, infaunal successional stage, and calculation of the Organism-Sediment Index (OSI) are three key SPI image analysis parameters that will be used to evaluate the health of the benthic infaunal community. The presence/absence and relative abundance of epibenthic organisms will also be noted in SPI and plan view images and reported.

3.8.2 Data Reporting

A Pre- and Post-Discharge Seafloor Survey Report will be prepared documenting the SPI and PV imaging survey activities, any deviations from the approved QAPP, and summarizing the results of the study. At a minimum, the Survey Report will include:

- A summary of the purpose of the investigation;
- Description of SPI and PV imaging activities;
- Protocols used during sampling and testing (including any in-field interpretation), and an explanation of any deviations from the sampling plan protocols or the approved work plan;
- Methods used for station positioning and SPI and PV collection locations reported in latitude and longitude to the nearest tenth of a second (NAD83);
    - Date, time, and water depth recorded at each SPI and PV collection location;
- Maps showing actual locations of SPI and PV stations with an overlay of all recorded barge disposal points or tracks;
- Maps, data tables, and interpretation of SPI and PV image analysis results;
- Analysis of plan view images for seafloor community taxonomic identification;
- Copies of field and sampling logs as appendices; and
- QA/QC summary, including any exceptions to the QAPP and any sampling difficulties encountered.

3.9 NON-DIRECT MEASUREMENTS

Coastal Oceanographic's HYPACK® survey and data acquisition software will be used to provide the real-time interface, display, and logging of the DGPS data. Prior to field operations, HYPACK® will be used to define a state plane grid around the survey area. During the survey operations, the incoming navigation data will be translated into state plane coordinates, time-tagged, and stored within HYPACK®. Depending on the type of field operation being conducted, the real-time navigation information will be displayed in a variety of user-defined modes within HYPACK®.

3.10 DATA MANAGEMENT

3.10.1 Electronic Data

A laptop personal computer is used to display the navigation data and to store it on hard disk. At the end of each day of survey the daily navigation data are copied onto external media storage. Image analysis data are stored in real-time to an electronic database during the image analysis process and saved on the computer hard drive.

3.10.2 Field Logs

Documentation associated with SPI consists of field logs, notes, and narratives associated with data processing, review, and interpretation. The log will be used to document all sampling and data recording events, as well as other significant activities or problems encountered during survey operations. Maintenance and custody of the log will be the responsibility of the Field Leader. Upon completion of the survey activities, the log will be provided to the Project Manager.

If a significant deviation from the field sampling plan is necessary, the Field Leader aboard the survey vessel is responsible for noting such deviations in the field log, and notifying the Project Manager, who will be on board during field operations and can make the appropriate decision for corrective action if necessary.

3.10.3 Corrections to Documentation

If errors or omissions in the field logs or sample documentation records are identified by project personnel involved with the survey, these occurrences will be communicated to the Project Manager. The need for any significant corrections will first be documented in writing, and then corrections will be made in red ink on the original logs or records. Additionally, corrections will be dated and signed by the person affecting the change.

The Project Manager will be responsible for security of all field records and project data/information acquired during survey operations. Originals of logs and data records will be maintained in a secure storage facility at the NewFields Edmonds, WA, office. Additionally, back-up copies of all digital data will be stored on magnetic medium in an appropriate storage area.

4.0 Assessments/Oversight

4.1 ASSESSMENTS AND RESPONSE ACTIONS

The QA program under which this work assignment will operate includes implementation of preventive protocols as well as oversight and independent checks of the data obtained from sampling, analysis, and data gathering activities. The QA program will be reviewed by Floyd|Snider to ensure that QA/QC requirements are attained. Each team member will work to prevent problems by training staff, ensuring equipment is calibrated and properly maintained, procedures are followed, and oversight is constant. If a problem occurs, the essential steps in the QA program are as follows:

- Identify and define the problem.
- Assign responsibility for investigating the problem.
- Investigate and determine the cause of the problem.
- Assign and accept responsibility for implementing appropriate corrective action.
- Establish effectiveness of and implement the corrective action.
- Verify that the corrective action has eliminated the problem.

Immediate corrective actions form part of normal operating procedures and are noted in records for the project. Problems not solved this way require more formalized, long-term corrective action. In the event quality problems that require attention are identified, Floyd|Snider or the subcontractor will determine whether attainment of acceptable quality requires either short- or long-term actions. If a failure in an analytical system occurs (e.g., performance requirements are not met), the NewFields PM or Quality Assurance Officer (QAO) will be responsible for corrective action and will immediately inform the ADEC PM. The NewFields PM has the primary responsibility for monitoring the activities of this project and identifying/confirming any quality problems. These problems will also be brought to the attention of the Floyd|Snider QAO, who will initiate the corrective action system described above, documenting the nature of the problem and ensuring that the recommended corrective action is carried out. The Floyd|Snider QAO has the authority to stop work on the project if problems affecting data quality that will require extensive effort to resolve are identified. The ADEC PM will be notified of major corrective actions and stop work orders.

Performance audits are quantitative checks on different segments of project activities; they are most appropriate for sampling, analysis, and data processing activities. Performance audit techniques include checks on sampling equipment, volume measurements, and the analysis of data quality using QC and spiked samples. The NewFields PM or designee is responsible for overseeing work as it is performed and periodically conducting checks during the data entry and analysis phases of the project. Field audits will not be performed during this project.

System audits are qualitative reviews of project activity to check that the overall quality program is functioning and that the appropriate QC measures identified in the QAPP are being implemented. An internal system audit will not be conducted for this project.

4.2 REPORTS TO MANAGEMENT

Upon completion of the sampling activities for the pre- and post-discharge seafloor surveys, the Field Survey Leader will provide a summary of completed activities for each survey. Within forty-five (45) days after completion of the field work and completion of the image analysis for the post-discharge survey event, UniSea shall submit a Pre- and Post-Discharge Seafloor Survey Report, incorporating all of the data that was collected during the pre- and post-discharge surveys, and containing written summaries and findings to ADEC for review and approval.

5.0 Data Review and Evaluation

5.1 DATA REVIEW, VERIFICATION, AND VALIDATIONS

Data review, verification that the specified data were collected, and validation that the data were obtained by the protocols specified in the QAPP, provide a method for determining the usability and limitations of data, and provide a standardized data quality assessment.

5.2 VERIFICATION AND VALIDATION METHODS

Field record forms, field log notebooks, and chain-of-custody records will be reviewed by the NewFields PM for completeness and correctness. Any discrepancies in the records will be reconciled with the appropriate associated field personnel and documented. NewFields will be responsible for reviewing data entries and transmittals for completeness and adherence to QC requirements. Data quality will be assessed by comparing entered data to original data or by comparing results with the measurement performance criteria summarized in Section 2.5 to determine whether to accept, reject, or qualify the data.

5.3 RECONCILIATION WITH USER REQUIREMENTS

As soon as possible following completion of the sample collection and analyses, precision, accuracy, and completeness measures will be assessed and compared with the criteria discussed in Section 2.5. This will represent the final determination of whether the data collected are of the correct type, quantity, and quality to support their intended use. Any problems encountered in meeting the performance criteria (or uncertainties and limitations in the use of the data) will be discussed with the ADEC PM and will be reconciled, if possible.

6.0 References

Floyd|Snider. 2015. UniSea, Inc. *Waste Remediation Plan*. Final. November 16, 2015. Prepared for UniSea, Inc., Dutch Harbor, AK. Submitted to U.S. Environmental Protection Agency, Seattle, WA. Submitted by Floyd|Snider, Seattle, WA.

Germano & Associates, Inc. 2007. *Rapid Seafloor Reconnaissance and Assessment of Seafood Waste Pile Removal in Udagak Bay, Alaska*. Prepared for U.S. Environmental Protection Agency, Region 10. Submitted by Icicle Seafoods, Seattle, WA. Prepared by Germano & Associates, Inc., Bellevue, WA. May 2007.

Germano & Associates, Inc. 2011. *Sediment Profile Imaging Report. Benthic Impact Assessment of Trident Seafoods' Submarine Waste Piles in Akutan & Ketchikan, Alaska*. Prepared for Trident Seafoods Corporation, Seattle, WA. Prepared by Germano & Associates, Inc., Bellevue, WA. January 2011.

Rhoads, D.C. and J.D. Germano. 1982. *Characterization of organism-sediment relations using sediment profile imaging: an efficient method of remotes ecological monitoring of the seafloor (REMOTS® system).* Mar. Ecol. Prog. Ser. 8: 115-128.

Rhoads, D.C. and J.D. Germano. 1986. *Interpreting long-term changes in benthic community structure: a new protocol*. Hydrobiology 142: 291-308.

RPS Evans-Hamilton (RPS) and NewFields. 2014. *UniSea, Inc. Benthic Impact Survey, Dutch Harbor, Alaska*. For submittal to U.S. Environmental Protection Agency, Region 10 and State of Alaska. Prepared by RPS Evans-Hamilton and NewFields. June 3, 2014.

USEPA. 2001. *EPA Requirements for Quality Assurance Project Plans*. EPA QA/R-5, EPA/240/B-01/003, U.S. Environmental Protection Agency, Office of Environmental Information, Washington, DC, March 2001.

USEPA. 2002. *Guidance for Quality Assurance Project Plans*. EPA QA/G-5, EPA/240/R-02/009, U.S. Environmental Protection Agency, Office of Environmental Information, Washington, DC, December 2002.

USEPA. 2003. *Authorization to Discharge under the National Pollutant Discharge Elimination System*. NPDES Permit No. AK-002865-7. April.

USEPA. 2011. *Consent Decree*. Civil Action No. 3:11-CV-00037-JWS. USEPA and State of Alaska. 1 June.

UniSea, Inc.

Pre- and Post-Discharge Seafloor Survey Plan and Quality Assurance Project Plan

Table

Table 1. SPI and PV Station Coordinates

Station ID	Latitude N	Longitude W	State Plane Alaska 10 FIPS NAD83	
			X	Y
UB-1	53.991990	-166.546013	5309433.57	1225860.28
UB-2	53.987933	-166.550673	5308633.57	1224260.28
UB-3	53.987359	-166.543303	5310233.57	1224260.28
UB-4	53.983877	-166.555332	5307833.57	1222660.28
UB-5	53.983303	-166.547963	5309433.57	1222660.28
UB-6	53.982728	-166.540593	5311033.57	1222660.28
UB-7	53.979820	-166.559990	5307033.57	1221060.28
UB-8	53.979246	-166.552621	5308633.57	1221060.28
UB-9	53.978672	-166.545253	5310233.57	1221060.28
UB-10	53.978097	-166.537884	5311833.57	1221060.28
UB-11	53.975190	-166.557279	5307833.57	1219460.28
UB-12	53.974616	-166.549911	5309433.57	1219460.28
UB-13	53.974041	-166.542543	5311033.57	1219460.28
UB-14	53.970559	-166.554569	5308633.57	1217860.28
UB-15	53.969985	-166.547202	5310233.57	1217860.28
UB-16	53.965929	-166.551859	5309433.57	1216260.28

Notes:
UB = Unalaska Bay
NAD = North American Datum
FIPS = Federal Information Processing Standard
Latitude and Longitude in decimal degrees
State plane coordinates in feet

UniSea, Inc.

Pre- and Post-Discharge Seafloor Survey Plan and Quality Assurance Project Plan

Figures

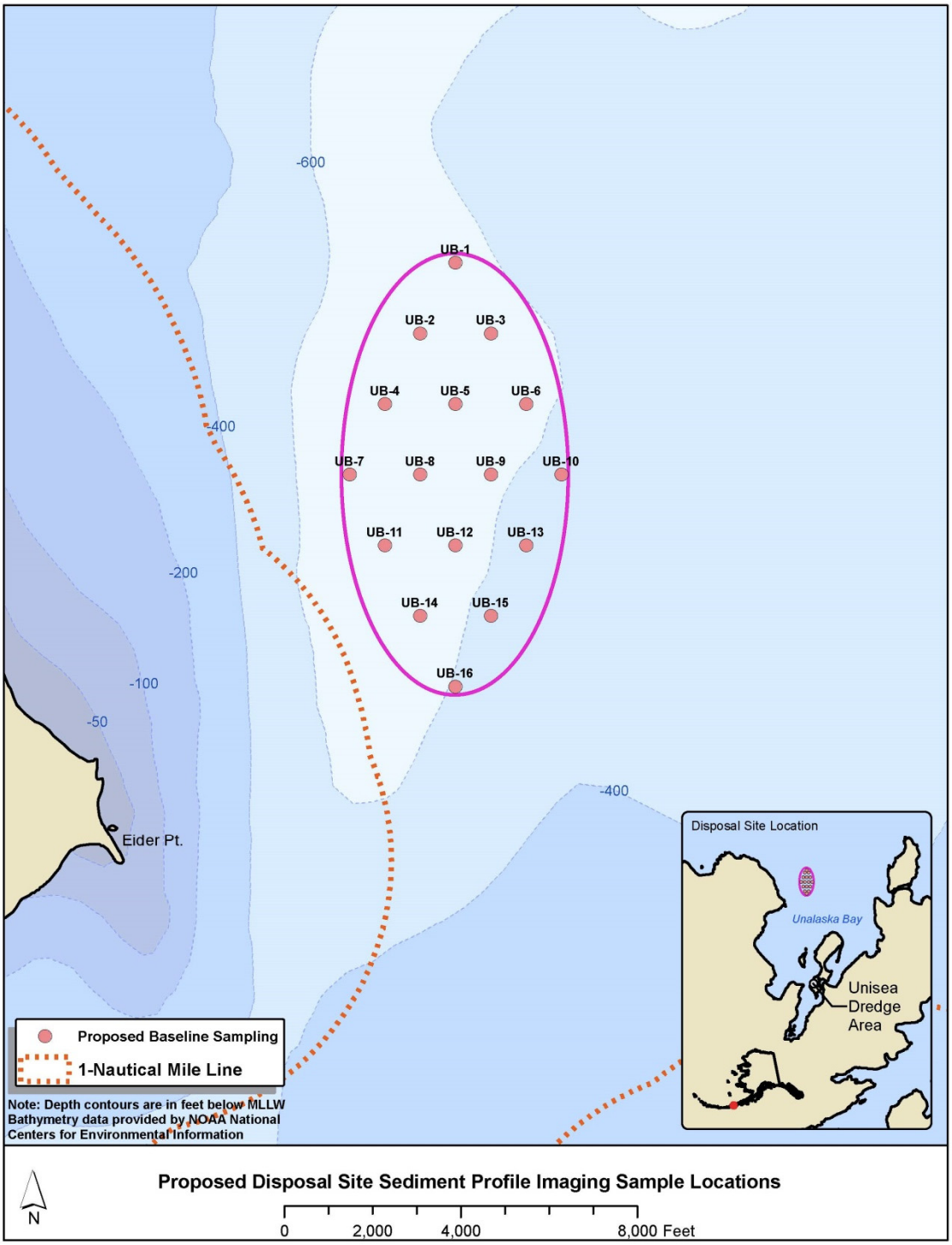

Figure 1. Proposed At-Sea Disposal Site SPI and PV locations.

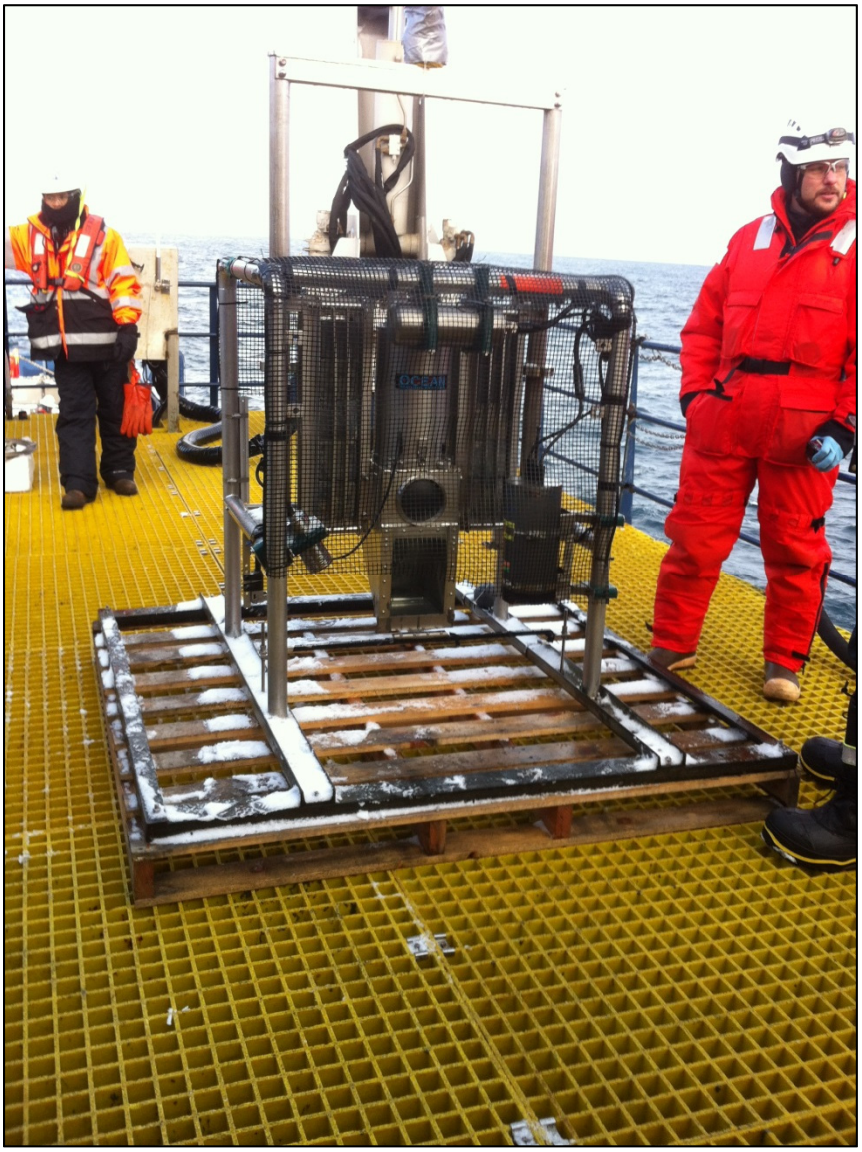

Figure 2. SPI and PV camera system.

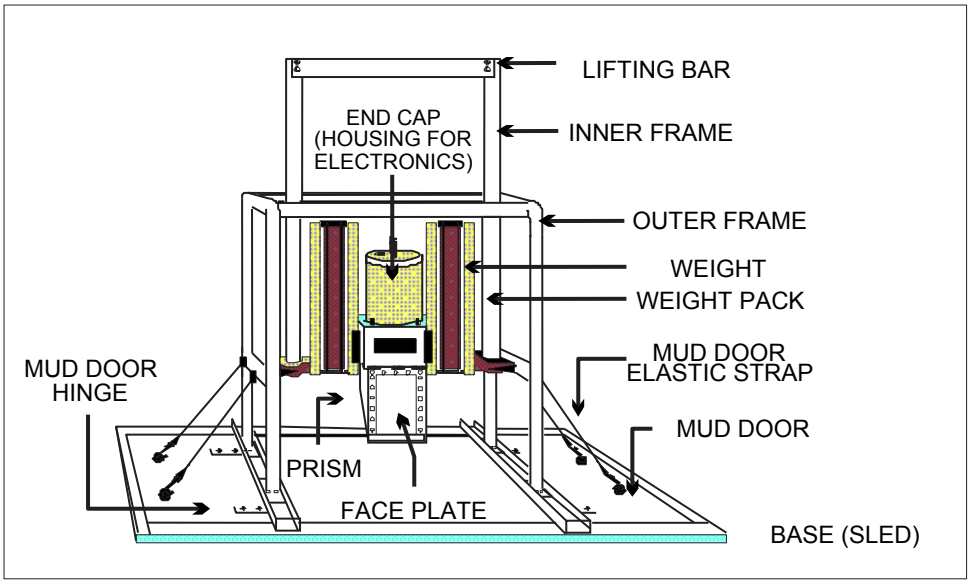

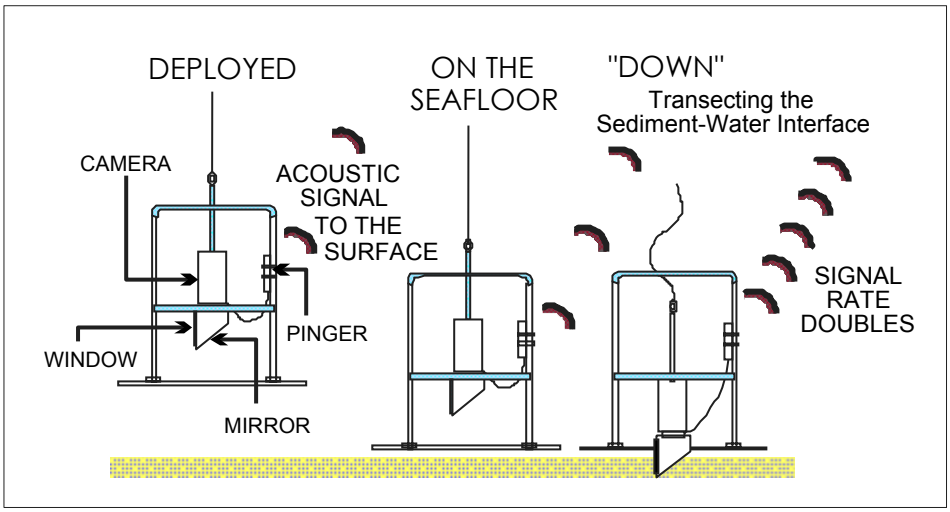

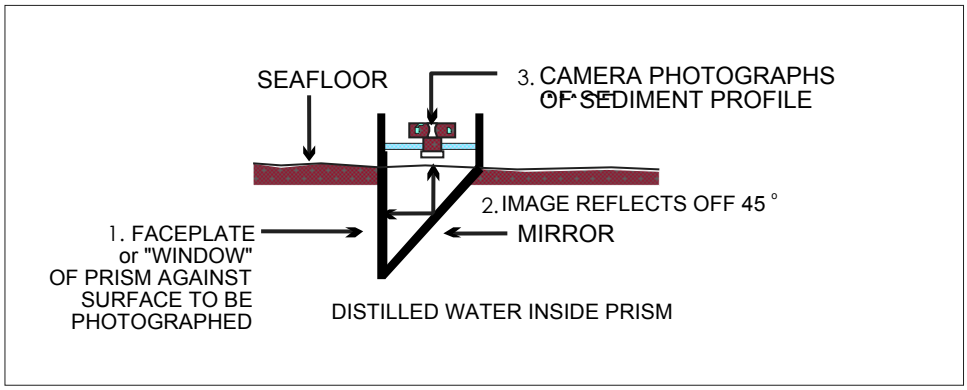

Figure 3. Schematic diagram of the sediment profile camera and sequence of operation on deployment.

UniSea, Inc.

Pre- and Post-Discharge Seafloor Survey Plan and Quality Assurance Project Plan

Appendix A
SPI Analysis Parameters

newfields logo too?
i forget who did this.

SPI Analysis Parameters

SEDIMENT [illegible]YSIS

Analysis o[illegible]ucted using the REMOTS (Remote Ecological Monitoring of the Seafloor) system. REMOTS is a formal and standardized technique for SPI image acquisition, image analysis, and interpretation (Rhoads and Germano, 1982 and 1986). Physical and biological parameters are measured directly from the digital SPI images using a computer image analysis system.

The image analysis software allows the measurement and storage of data from up to 21 different variables for each image. All data are edited and verified by a senior-level scientist before final data synthesis, statistical analyses, and interpretation. The specific REMOTS parameters include: sediment grain size (major mode and range), optical prism penetration depth, surface boundary roughness, mud clasts, gas voids, apparent Redox Potential Discontinuity (RPD) depth, infaunal successional stage, and calculation of the organism-sediment index (OSI). SPI imaging can be used to determine the thickness of discrete layers of organic matter or surface fish waste, and to determine dredged material thickness at disposal sites.

SEDIMENT GRAIN-SIZE

The sediment grain-size major mode and range, in phi units, are visually determined from the SPI images by overlaying a grain-size comparator at the same scale. This comparator was prepared by photographing a series of Udden-Wentworth size classes (equal to or less than coarse silt up to granule and larger sizes) through the SPI optical system. Seven grain-size classes are on this comparator: $\geq$ 4 phi (silt/clay), 4 to 3 phi (very fine sand), 3 to 2 phi (fine sand), 2 to 1 phi (medium sand), 1 to 0 phi (coarse sand), 0 to -1 phi (very coarse sand), and < -1 phi (gravels). The lower limit of optical resolution is approximately 62 μm, allowing recognition of grain sizes equal to or greater than coarse silt. The accuracy of this method has been documented by comparing SPI estimates with grain-size statistics determined from laboratory sieve analyses (SAIC 1986).

PRISM PENETRATION DEPTH

The prism penetration depth is determined by measuring both the largest and smallest linear distance between the sediment-water interface and the bottom of the film frame. Observations regarding the nature and condition of the sediment-water interface are also recorded. Comparative penetration depths from stations of similar grain-size give an indication of relative sediment water content and shear strength.

SURFACE BOUNDARY ROUGHNESS

Surface boundary roughness is determined by measuring the vertical distance (parallel to the image border) between the highest and lowest points of the sediment-water interface. In addition, the origin (physical or biogenic) of this small-scale topographic relief is sometimes evident and can be recorded. In sandy sediments, boundary roughness can be a measure of sand-

wave height. On silt-clay bottoms, boundary roughness values often reflect biogenic features such as fecal mounds or surface burrows. These features are abundant only in areas where boundary shear stresses are low enough that such delicate features are preserved. Disposed dredged material often introduces high surface relief on an otherwise "smooth" bottom. Other surface features are noted when evident, including shell fragments/lag deposits, mud-clay clasts, and wood debris.

MUD CLASTS

When fine-grained, cohesive sediments are disturbed, either by physical bottom scour or faunal activity (e.g., decapod foraging), intact clumps of sediment are often scattered about the seafloor. Following dredged material disposal of finer grained material, relict sediment clumps also may be present on the seafloor. These mud or clay clasts can be seen at the sediment-water interface in SPI images and their abundance, distribution, oxidation state, and appearance of mud clasts may be used to make inferences about the recent pattern of seafloor disturbance.

APPARENT REDOX POTENTIAL DISCONTINUITY (RPD) DEPTH

The depth of the apparent RPD, which is the change from oxidized to reduced sediment, can be measured using SPI photography and REMOTS image analysis. The upper surface of aerobic fine-grained sediments has a higher light reflectance value than underlying hypoxic or anoxic sediments. This is readily apparent in SPI images and is due to oxidized surface sediment that contains minerals in an oxidized state (typically an olive brown color), while the reduced sediments below this oxygenated layer are generally green, gray, blue, or black. The boundary between the colored ferric hydroxide surface sediment and underlying sediment is called the apparent redox potential discontinuity (RPD). The apparent RPD is a sensitive indicator of infaunal succession, sediment bioturbation activity, and sediment oxygen demand. The depth of the apparent RPD has proven to be a useful parameter for mapping gradients of enrichment on the seafloor (Rhoads and Germano 1982, Lyle 1983).

The actual RPD is the boundary that separates the positive Eh region (presence of free oxygen) of the sediment column from the underlying negative Eh region (absence of free oxygen). The exact location of the Eh boundary (where Eh = 0) can only be determined with microelectrodes. Therefore, the reflectance boundary observed in the SPI images is termed the apparent RPD. In general, the depth of the actual RPD will be shallower than the depth of the apparent RPD, because organisms cause bioturbation of ferric hydroxide-coated particles downward below the Eh = 0 horizon. As a result, the apparent RPD depth provides an estimate of the degree of biogenic sediment mixing. This variable is important in evaluating the effect of colonizing benthos on disposed materials. Bioturbation vertically transports buried reduced compounds to the sediment surface and exposes them to an oxidizing water column (Aller 1982). Bioturbation also affects sediment transport by changing the physical properties of sediments and their mechanical behavior (Rhoads and Boyer 1982).

Another important characteristic of the apparent RPD is the contrast in reflectance values at this boundary. This contrast is related to the interactions among the degree of organic-loading in the

sediment, bioturbation, and bottom-water dissolved oxygen levels. High inputs of labile organic material increase sediment oxygen demand, stimulate sulfate reduction rate, and result in sulfitic products. This results in more highly reduced (lower-reflectance) sediments at depth and higher RPD contrasts. In a region where generally low RPD contrasts exist, images with high RPD contrasts indicate localized sites of relatively high inputs of organic-rich material, such as dredged material.

INFAUNAL SUCCESSIONAL STAGE

The mapping of infaunal successional stages from SPI images is based on the theory that organism-sediment interactions follow a predictable sequence after a major seafloor perturbation. This theory states that primary succession results in "the predictable appearance of macrobenthic invertebrates belonging to specific functional types following a benthic disturbance and these invertebrates interact with sediments in specific ways. Moreover, functional types are the biological units of interest, and by definition do not demand a sequential appearance of particular invertebrate species or genera" (Rhoads and Boyer 1982).

Benthic disturbance can result from natural processes, such as seafloor erosion, changes in seafloor chemistry, and predator foraging, as well as from human activities like dredged material disposal, bottom trawling, pollution from industrial discharge, and excessive organic loading. Evaluation of successional stages involves deducing dynamics from structure, a technique pioneered by R. G. Johnson (1972) for marine soft-bottom habitats. The application of this approach to benthic monitoring requires in situ measurements of salient structural features of organism-sediment relationships as imaged through SPI photography.

Infaunal succession following a major seafloor disturbance initially involves pioneering populations (Primary or Stage I succession) of very small organisms that live at or near the sediment/water interface (Pearson and Rosenberg 1978, Rhoads and Germano 1986). In the absence of further disturbance, infaunal deposit feeders eventually replace these early successional assemblages. The start of this "infaunalization" process is designated as Stage II. Large, deep-burrowing infauna (Stage III taxa) represents a high order successional stage typically found in areas of low disturbance. Pioneering assemblages (Stage I assemblages) usually consist of dense aggregations of near-surface living, tube-dwelling polychaetes (Figure 1); alternately, opportunistic bivalves may colonize in dense aggregations after a disturbance (Rhoads and Germano 1982, Santos and Simon 1980a). These functional types are usually associated with a shallow redox boundary; and bioturbation depths are shallow, particularly in the earliest stages of colonization.

Many deep-burrowing infauna feed at depth in a head-down orientation. This localized feeding activity results in distinctive excavations called feeding voids. Diagnostic features of these feeding structures include a generally semicircular shape with a flat bottom and arched roof, and a distinct granulometric change in the sediment particles overlying the floor of the structure. The relatively coarse-grained material represents particles rejected by head-down deposit-feeders, as this deep-dwelling infauna preferentially ingest the finer sediment particles. Other subsurface structures, including burrows or methane bubbles, do not exhibit these characteristics. The

bioturbation activities of these deposit-feeders are responsible for aerating the sediment and causing the redox horizon to be located several centimeters below the sediment-water interface. The presence of Stage III feeding voids indicates the presence of Stage III organisms. The mapped distribution of deep infaunal assemblages may be useful in identifying undisturbed sites in both shallow and deep water environments. In sediment environments rich in labile organic material, it is not uncommon to observe Stage I communities coexisting with Stage II or III communities (Rhoads and Germano 1986). These mixed infaunal stages are classified as Stage I on II, or Stage I on III.

sticky?

In sandy, dynamic environments, the climax communities may consist primarily dwellers that reside in the upper cm of the sediment surface and have few if any naturally burrowing community members. These type communities are classified as Stage I communities by SPI image analysis reflective of an area influenced by physical factors (e.g., higher energy) and the presence of a sandy substrate, rather than a higher order successional stage that would typically be assigned a climax community (as described above) in a depositional environment dominated by a silt/clay substrate.

ORGANISM-SEDIMENT INDEX

The Organism-Sediment Index (OSI) provides a measure of general benthic habitat quality in shallow water environments based on dissolved oxygen conditions, depth of the apparent RPD, infaunal successional stage, and presence or absence of sedimentary methane. The OSI is a numerical index ranging from -10 to +11. The lowest value is given to bottom sediments with low or no dissolved oxygen in the overlying bottom water, no apparent macrofaunal life, and methane gas present in the sediment. The OSI for such a condition is –10 (highly disturbed or degraded benthic habitat quality). High OSI values are given to aerobic bottom sediments with a deep apparent RPD, mature macrofaunal community, and no methane gas (unstressed or undisturbed benthic habitat quality). The numerical values and ranges used in calculating the OSI are provided in Table 1.

The OSI is calculated automatically by the image analysis software after completion of all measurements from each SPI image. The index has proven to be a useful parameter for mapping disturbance gradients in an area and documenting ecosystem recovery after disturbance (Germano and Rhoads 1984, Revelas et al. 1987, Valente et al. 1992).

The OSI may be subject to seasonal changes because the mean apparent RPD depths vary as a result of temperature-controlled changes of bioturbation rates and sediment oxygen demand. Furthermore, the successional status of a station may change over the course of a season related to recruitment and mortality patterns or the disturbance history of the bottom. The sub-annual change in successional status is generally limited to Stage I (polychaete-dominated) and Stage II (amphipod-dominated) seres. Stage III seres tend to be maintained over periods of several years unless they are eliminated by increasing organic loading, extended periods of hypoxia, or burial by thick layers of dredged material. The recovery of Stage III seres following abatement of such events may take several years (Rhoads and Germano 1982). Stations that have low or moderate

OSI values (< +6) are indicative of recently disturbed areas and tend to have greater temporal and spatial variation in benthic habitat quality than stations with higher OSI values (> +6).

REFERENCES

Aller, R.C. 1982. *The effects of macrobenthos on chemical properties of marine sediments and overlying waters*. In: P.L. McCall & M.J.S. Tevesz (eds.), Animal-Sediment Relations. Plenum Publishing, NY. 53-102.

Germano, J.D., and D.C. Rhoads. 1984. *REMOTS sediment profiling at the Field Verification Program (FVP) Disposal Site*. Dredging '84: Proceedings of the Conference, ASCE, November 14-16, Clearwater, FL. pp. 536-544.

Johnson, R.G. 1972. *Conceptual models of benthic marine communities. In: Models of Paleobiology (Schopf, ed.).* Freeman, Cooper, and Co., San Francisco. pp. 145-159.

Lyle, M. 1983. *The brown-green color transition in marine sediments: A marker of the Fe (III)-Fe (II) redox boundary*. Limnol. Oceanogr. 28: 1026-1033.

Pearson, T.H. and R. Rosenberg. 1978. *Macrobenthic Succession in Relation to Organic Enrichment and Pollution of the Marine Environment*. Oceanogr. Mar. Biol. Ann. Rev. 16: 229-311.

Revelas, E.C., D.C. Rhoads, and J.D. Germano. 1987. *San Francisco Bay Sediment Quality Surveys and Analyses*. NOAA Technical Memorandum NOS OMA 35. Rockville, MD.

Rhoads, D.C. and L.F. Boyer. 1982. *The effects of marine benthos on physical properties of sediments*. In: P.L. McCall and M.J.S. Tevesz (eds.), Animal-Sediment Relations. Topics in Geobiology, Plenum Press, N.Y., N.Y. 2: 3-52.

Rhoads, D.C. and J.D. Germano. 1982. *Characterization of organism-sediment relations using sediment profile imaging: an efficient method of remotes ecological monitoring of the seafloor (REMOTS® system).* Mar. Ecol. Prog. Ser. 8: 115-128.

Rhoads, D.C. and J.D. Germano. 1986. *Interpreting long-term changes in benthic community structure: a new protocol*. Hydrobiology 142: 291-308.

SAIC. 1986. *Environmental information in support of site designation documents for the Foul Area Disposal Site - Volume 1: Technical Report. Report No. SAIC-85/7528&93*. Submitted to the U.S. Corps of Engineers, New England Division, Waltham, WA.

Valente, R.M., D.C. Rhoads, J.D. Germano, and V.J. Cabelli. 1992. *Mapping of benthic enrichment patterns in Narragansett Bay, Rhode Island*. Estuaries Vol. 15, No. 1, p. 1-17. March 1992.

Table 1. Calculation of the Organism-Sediment Index.

Choose One Value:

Mean RPD Depth Classes	Index Value
0.00 cm	0
> 0 - 0.75 cm	1
0.76 - 1.50 cm	2
1.51 - 2.25 cm	3
2.26 - 3.00 cm	4
3.01 - 3.75 cm	5
> 3.75 cm	6

Choose One Value:

Successional Stage	Index Value
Azoic	- 4
Stage I	1
Stage I - II	2
Stage II	3
Stage II - III	4
Stage III	5
Stage I on III	5
Stage II on III	5

Choose One or Both if Appropriate:

Chemical Parameters	Index Value
Methane Present	- 2
No/Low Dissolved Oxygen	- 4

SPI Organism-Sediment Index = Range: - 10 + 11

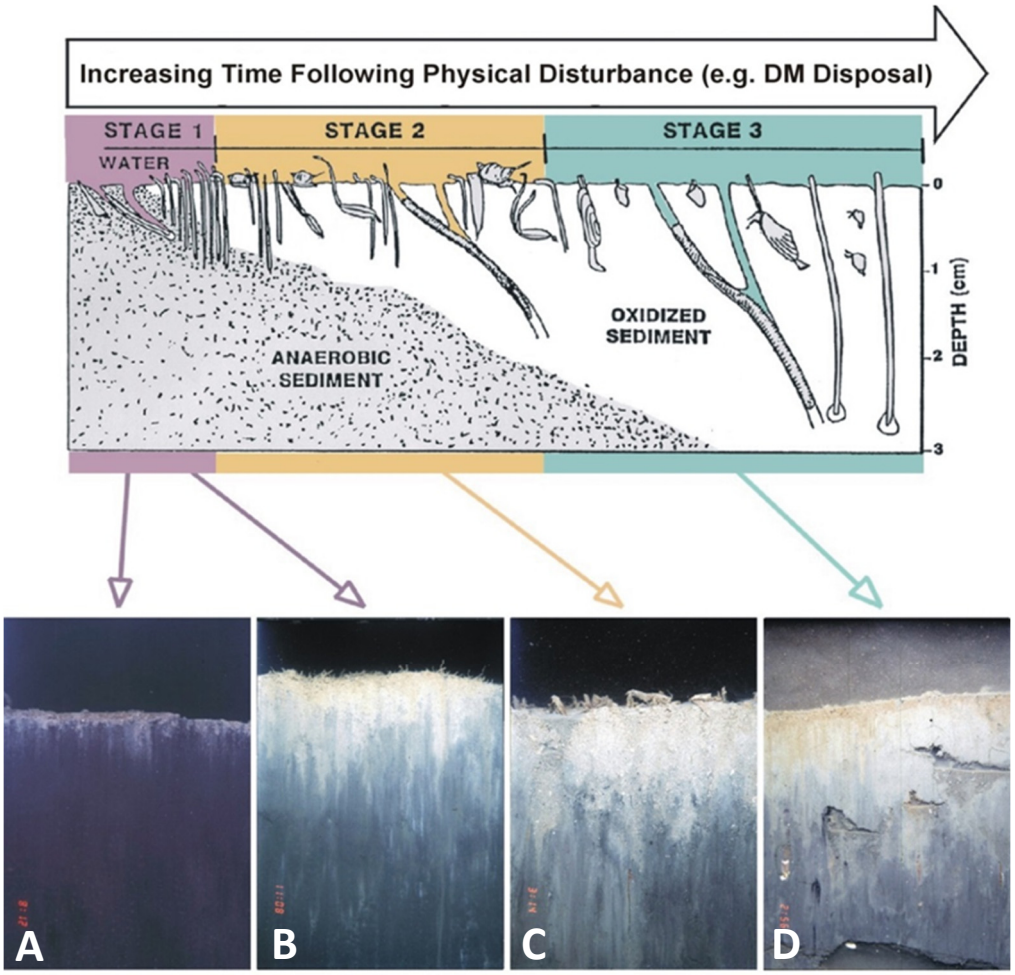

The development of infaunal successional stages over time following a physical disturbance or with distance from an organic loading source (from Rhoads and Germano 1986). The SPI images below the drawing provide examples of the different successional stages.

Image A: Image A shows highly reduced sediment with a very shallow redox layer (contrast between light colored surface sediments and dark underlying sediments) and little evidence of infauna.

Image B: Numerous small polychaete tubes are visible at the sediment surface in image B (Stage I), and the redox depth is deeper than in image A.

Image C: A mixture of polychaete and amphipod tubes occurs at the sediment surface in image C (Stage II).

Image D: Image D shows numerous burrow openings and feeding pockets (voids) at depth within the sediment; these are evidence of deposit-feeding, Stage III infauna. Note the RPD is relatively deep in this image, as bioturbation by the Stage III organisms has resulted in increased sediment aeration and causing the redox horizon to be located several centimeters below the sediment-water interface.

Figure 1. Successional stage assemblages and relationship to SPI.