4.1 TOTAL SUSPENDED PARTICULATE (TSP)
Hi-Volume Method

Table of Contents

Section	Title	Page
4.1.0	Method Summary	4.1-1
4.1.1	Equipment Installation	4.1.1-1
4.1.1.1	Pick Up and Delivery	4.1.1-1
4.1.1.2	Required Tools and Information	4.1.1-1
4.1.1.3	Courier Pick-up	4.1.1-1
4.1.1.4	Equipment Delivery	4.1.1-1
4.1.1.5	Physical Siting	4.1.1-2
4.1.1.6	Shelter Assembly Installation	4.1.1-2
4.1.1.7	Motor Blower and Filter Holder Installation	4.1.1-2
4.1.1.8	Peripheral Equipment	4.1.1-4
4.1.1.9	Operational Checks	4.1.1-7
4.1.1.10	Documentation	4.1.1-8
4.1.2	TSP Calibration Procedure	4.1.2-1
4.1.2.1	Instrument Configuration	4.1.2-1
4.1.2.2	Flow Rate Calibration Equipment	4.1.2-1
4.1.2.3	Calibration	4.1.2-3
4.1.2.3.A	Flow Calibration Procedures - Hi-vols With Mass Flow Controllers	4.1.2.4
4.1.2.3.B	Flow Calibration Procedures - Hi-vols With Volume Flow Controllers	4.1.2-5
4.1.2.3.C	Flow Calibration Procedures - Hi-vols Without Flow Controllers	4.1.2-5
4.1.2.4	Equipment Preparation	4.1.2.5
4.1.2.4.1	Leak Testing	4.1.2-7
4.1.2.5	Manometer Preparation	4.1.2-8
4.1.2.5.1	System Setup	4.1.2-9
4.1.2.5.2	Transducer - Flow Meter Preparation - Dixon Chart Recorder	4.1.2-9
4.1.2.5.3	Calibration Procedure	4.1.2-10
4.1.2.5.4	Calibration Calculations	4.1.2-11
4.1.2.5.5	Indicated Flow Calculation	4.1.2-14
4.1.2.5.6	Plotting the Calibration Curve	4.1.2-14

Table of Contents (continued)

4.1.2.6 Calibration of Peripheral Equipment 4.1.2-20
4.1.2.6.A Analytical Balance 4.1.2-20
4.1.2.6.B Relative Humidity Indicator 4.1.2-20
4.1.2.6.C Elapsed-time Meter 4.1.2-20
4.1.2.6.D On-Off Timer 4.1.2-20

4.1.3 Operations 4.1.2-20
4.1.3.0 Filter Weighing Instructions 4.1.3-1
4.1.3.0.A Initial Filter Inspection and Weighing Procedure Procedure . . 4.1.3-1
4.1.3.0.B Quality Control Procedures for Filter Weighing 4.1.3-1
4.1.3.1 Hi-vol Filter Instructions 4.1.3-3
4.1.3.1.A Filter Cassette Preparation and Installation 4.1.3-3
4.1.3.1.B Filter Adapter Installation 4.1.3-4
4.1.3.1.C Monitor Site Operational Settings 4.1.3-4
4.1.3.1.D Filter Retrieval 4.1.3-7
4.1.3.1.E Filter Inspection 4.1.3-9
4.1.3.1.F Exposed filter Equilibration 4.1.3-9
4.1.3.1.G Filter Weighing and Archival 4.1.3-10
4.1.3.2 Equipment Maintenance 4.1.3-10
4.1.3.2.A Sampler Motor 4.1.3-11
4.1.3.2.B Face Plate or Cartridge Gasket 4.1.3-12
4.1.3.2.C Rotameter 4.1.3-13
4.1.3.2.D Sampling Head 4.1.3-14
4.1.3.2.E Motor Gaskets 4.1.3-15
4.1.3.2.F Flow Transducer and Recorder 4.1.3-15

4.1.4 Data Acquisition, Processing, and Reporting 4.1.4-1
4.1.4.1 Data Quality Control 4.1.4-1
4.1.4.2 Calibration Standards 4.1.4-2
4.1.4.3 Statistical Tracking 4.1.4-2
4.1.4.4 Assessment of Monitoring Data for Precision and Accuracy 4.1.4-3
4.1.4.4.1 Precision 4.1.4-3
4.1.4.4.2 Accuracy 4.1.4-4
4.1.4.5 Data Qualification 4.1.4-7
4.1.4.6 Data Submission 4.1.4-7

4.1 TOTAL SUSPENDED PARTICULATE (TSP) HI-VOLUME METHOD

4.1.0 METHOD SUMMARY

Ambient air drawn into a covered housing and through a filter by a high-flow-rate blower at 1.1 to 1.7 m^3/min (39 to 60 ft^3/min) allows total suspended particulates (TSP) in sizes up to 25 to 50 μm (aerodynamic diameter) to collect on the filter surface. When operated within this range, the high-volume sampler is capable of collecting TSP samples for 24-hour TSP concentrations ranging from 2 to 750 μg/std m^3. The mass concentration (μg/std m^3) in ambient air is computed by measuring both the mass of TSP collected and the (standard) volume of air samples.

This method provides a measurement of the mass concentration of total suspended particulate matter (TSP) in ambient air. The measurement process is nondestructive, and the size of the sample collected is usually adequate for subsequent chemical analysis. Based on collaborative testing, the relative standard deviation (coefficient of variation) for single-analyst precision (repeatability) of the method is 3.0 percent. The corresponding value for interlaboratory precision (reproducibility) is 3.7 percent.

The absolute accuracy of the method is undefined because of the complex nature of atmospheric particulate matter and the difficulty in determining the "true" particulate matter concentration.

This reference method appears in Title 40 of the Code of Federal Regulations, Part 50, Appendix B.

4.1.1 EQUIPMENT INSTALLATION

There are five basic functions to consider when performing a TSP equipment installation:

1. Hi-vol equipment pick-up and delivery
2. Hi-vol shelter initial set-up
3. Hi-vol equipment installation
4. equipment operational checks
5. site documentation

At the end of the installation process, the Hi-vol sampler will be ready for calibration and operation. The above steps represent the minimum required tasks for assuring a proper Hi-vol installation.

4.1.1.1 PICK-UP AND DELIVERY

This section pertains primarily to remote sites where the equipment was transported by a commercial carrier.

4.1.1.2 REQUIRED TOOLS AND INFORMATION

1. location of monitoring site (map with address and phone number)
2. location (telephone number and address of carrier)
3. bill of lading or shipping document number
4. box cutter or pocket knife
5. rope (for securing or lifting equipment)
6. ladder (if required)
7. red flag (safety marker for long loads (ladder, building materials)
8. tarp

4.1.1.3 COURIER PICK-UP

Check the following when taking delivery of shipped equipment:

1. packing slip
2. ensure all shipped items have arrived
3. obvious damage to equipment

If equipment is damaged, notify the carrier and contact the shipper.

4.1.1.4 EQUIPMENT DELIVERY

Equipment to be delivered to a monitoring site will:

1. be properly stacked and secured.

2. be protected from the elements with a tarp.

3. be transported in a safe manner (i.e., safety flags installed to identify long truck loads and adequate rear and side view vision).

4.1.1.5 PHYSICAL SITING

1. view the map which identifies the equipment layout.

2. At the monitoring site, unload the equipment as close to the monitoring site as possible to minimize the carrying distance.

NOTE: If the installation requires lifting to a location on a roof or an elevated platform, consult federal, State, and local safety procedures. If there are any questions regarding safety, consult the supervisor, written regulations, or the Department of Labor before you proceed.

4.1.1 6 SHELTER ASSEMBLY INSTALLATION

The location and orientation of the Hi-vol shelter(s) will have already been identified as part of the monitoring site selection and preparation. If required, a wooden platform will be located where the monitor(s) is to be mounted. If the monitor is to be installed in conjunction with, or adjacent to, additional monitors, the installation must maintain proper separations between each monitor (no closer then 2 meters and no further than 4 meters). When the shelter has been positioned securely, fasten it to the platform. It is recommended that each leg of the Hi-vol shelter be screwed directly to small blocks mounted on the platform. (See Figure 4.1-1.)

Weight the platform to ensure that the Hi-vol will not blow over at times of high winds. Three large blocks (8 or 16 inch) as a minimum weight, are suggested.

NOTE: If the platform is to be secured directly to a roof, care must be taken to ensure the roof is not damaged.

4.1.1.7 MOTOR BLOWER AND FILTER HOLDER INSTALLATION

To install the Hi-vol:

1. Connect the filter holder to the Hi-vol motor assembly, ensure the gasket is in place. (See Figure 4.1-2.)

2. Place the Hi-vol motor assembly in the Hi-vol shelter. (See Figure 4.1-3.)

3. In most cases, the peripheral equipment is mounted on the Hi-vol shelter at the factory. If, however, an update is required, Figure 4.1-3 shows a typical configuration.

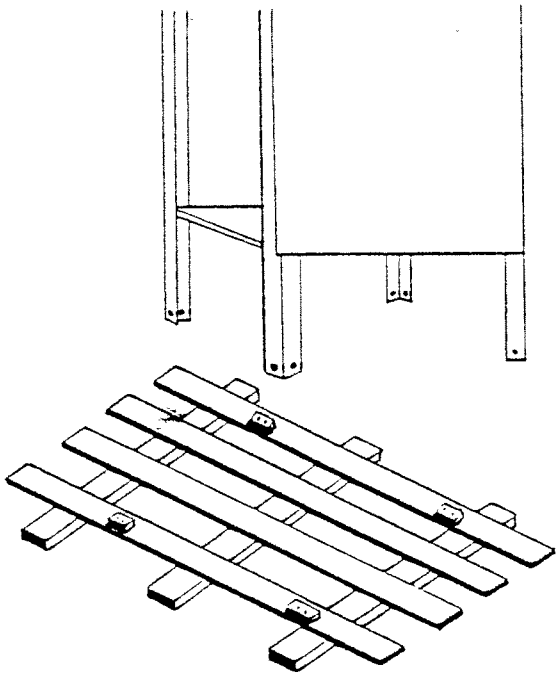

Figure 4.1-1

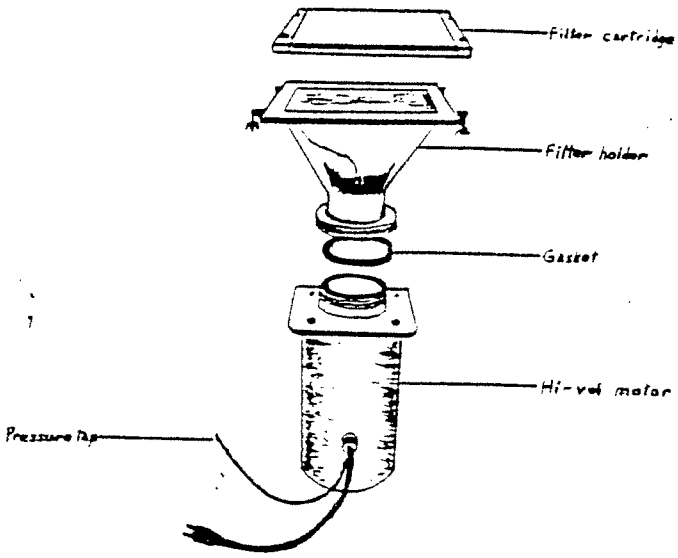

Figure 4-1.2

4.1.1.8 PERIPHERAL EQUIPMENT

Hi-vol systems may be operated in several different configurations. The following describes components typically used in hi-vol systems. See Figure 4.1-4 for typical connection sequence.

1. **Day Timers:** The State of Alaska uses six-day or seven-day mechanical timers. These timing devices have been reliable in the wide range of weather conditions experienced in Alaska. The day timer is the first piece of equipment installed in the Hi-vol network (see Figure 4.1-4) and, unless otherwise documented, it is installed and operated following the manufacturer's operating instructions.

   NOTE: The electrical GUARD plate provides a safeguard against electrical shock. If the plate is to be removed, unplug the unit. Upon completion of maintenance, always re-install the safety guard plate.

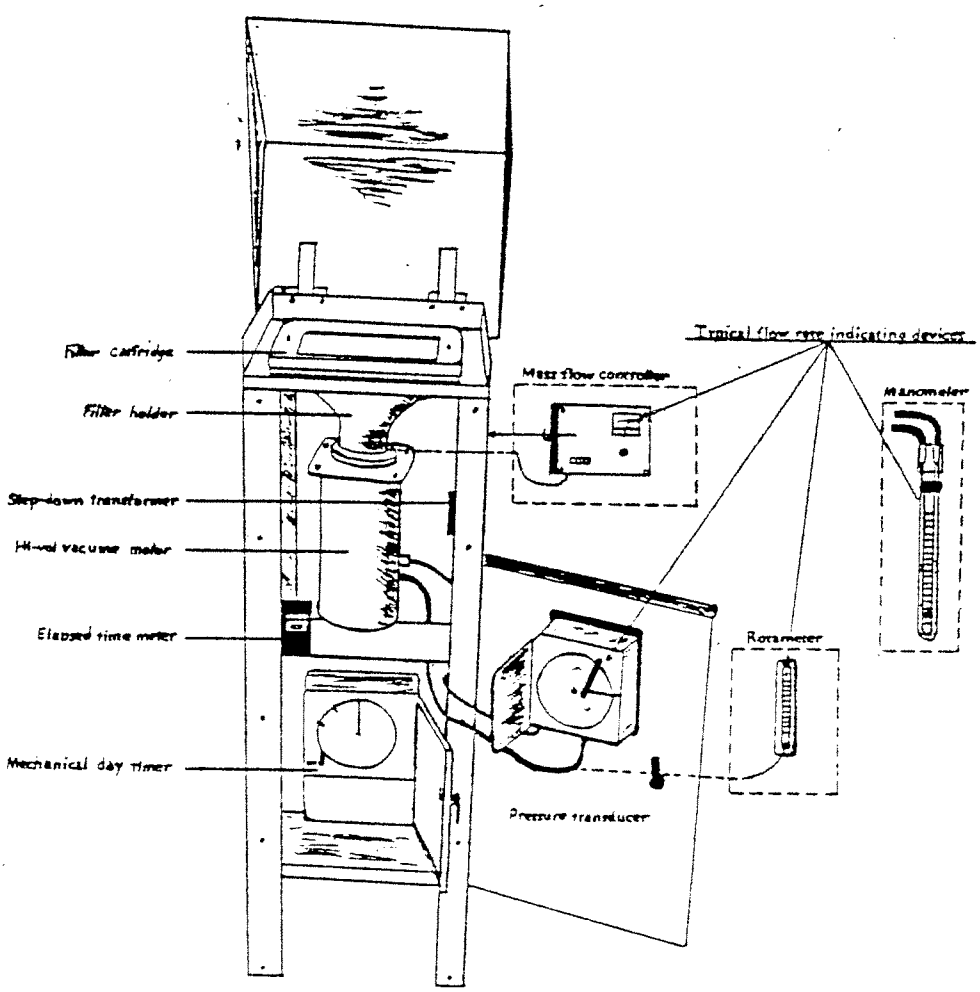

Figure 4.1-3

1. **Elapsed Timers:** The Elapsed Time Indicating device is used to accurately monitor the operation time of the day timer output. Unless otherwise documented, the timer is installed and operated following the manufacturer's operating instructions.

NOTE: A mechanical or electrical failure down-line (Hi-vol motor, flow controller, etc.) of the elapsed time indicator will have no effect on the elapsed time indicator. This results in inaccurate time measurements and inaccurate daily particulate loading calculations.

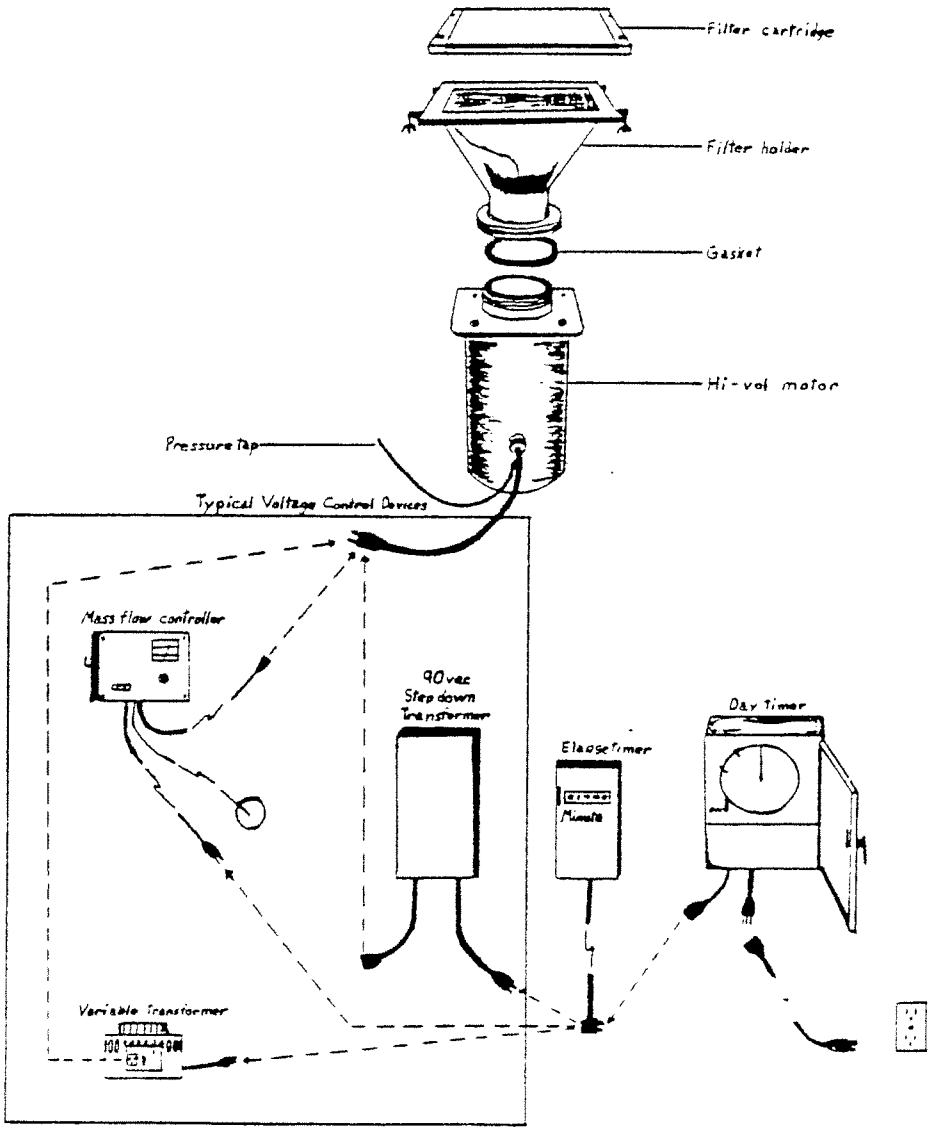

Figure 4.1-4

2. **Voltage Control Devices:** Alaska monitoring network uses three basic types of voltage control devices (Figure 4.1-5). These are:

   a. step-down transformers
   b. variable transformers
   c. mass flow controllers

   The purpose of the voltage controller is:

   a. to ensure the flow rate remains between 1.1 and 1.7 m3/min.
   b. to extend the life of the Hi-vol motors.

Installation and operation, unless otherwise documented, will follow the manufacturer's operating instructions.

NOTE: When installing the mass flow controller, probe into the filter holder, ensure the probe scribe mark is facing up. (See Figure 4.1-5.)

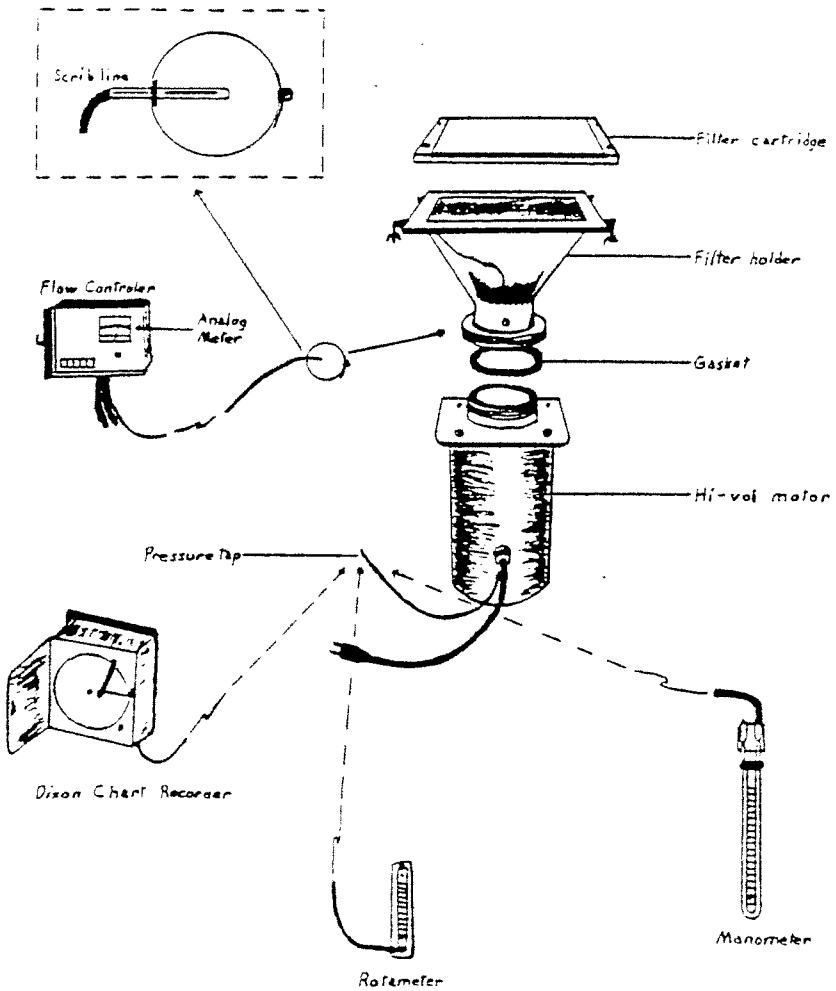

Figure 4.1-5

4. **Flow Indicators:** The purpose of the flow indicator is to provide a means by which an operator can check the air flow through the Hi-vol motor assembly. The Alaskan monitoring network uses rotameters, Dixon chart recorders, mass flow controller analog meters, and manometers to indicate flow. (See Figure 4.1-5.)

   Unless otherwise documented, the manufacturer's suggested operating procedures will be followed.

4.1.1.9 OPERATIONAL CHECKS

The purpose of an "operational check" is to ensure that all the components of the monitoring unit are operational and ready for calibration. Monitoring units may differ from one site to another, due primarily to differences in equipment types. The following is an operational check using the equipment pictured in Figure 4.2-4.

The operational check requires the monitoring unit to be set up as if it were a regular run day, with the exception that the day timer is set to operate for approximately 15 minutes. Following the manufacturer's operating instruction:

1. Set the day timer to operate for approximately 15 minutes.

2. Set the Dixon Chart Recorder to operate. Ensure there is a chart installed and the pen is leaving a clear trace.

4. Install the filter cartridge complete with filter.

Once the equipment is pre-set, perform the following:

1. Set the day timer device to just before the pre-set "on time" and allow the system to operate normally.

2. When the clocking mechanism actuates the "on"switch, ensure the switch goes to the full ON position. A faulty, dirty, overly greasy switching mechanism may actuate only halfway. Later in the sample run, the switch could vibrate to the OFF position causing loss of data. This problem has been noted at colder operating temperatures.

   The motor assembly should now be operating. Check the following:

   a. the elapse time indicator is operating.

   b. the Dixon Chart Recorder is rotating and there is a clear up-scale pen trace.

   c. the analog meter on the mass flow controller has an up-scale reading.

d. the mass flow controller is compensating for added resistance in the air flow. This can be accomplished by placing a partial restriction over the filter (i.e., your hand) and listening for the motor assembly to speed up. When the restriction is removed, the motor will return to the lower speed.

4.1.1.10 DOCUMENTATION (under development)

1. pictorial
2. written
3. trip report

4.1.2 TSP CALIBRATION PROCEDURE

After the TSP monitoring equipment has been delivered to the site and installed, it must be calibrated prior to operational use. This section details the calibration procedures used by the State of Alaska to calibrate its TSP monitoring network.

4.1.2.1 INSTRUMENT CONFIGURATION

The TSP monitoring equipment network can be configured in several arrangements. For ease of explanation, the flow calibration procedure is described for a site equipped with the following (see Figure 4.1-3):

1. high volume sampler shelter
2. six- or seven-day mechanical clock timer
3. voltage control device; i.e., stepdown transformer
4. minutes elapsed time meter
5. high-volume filter cartridge (optional)
6. high-volume filter holder
7. flow indicating devices (see Figure 4.1-5)

    a. pressure transducer flow recorder (Dixon)
    b. rotameter

4.1.2.2 FLOW RATE CALIBRATION EQUIPMENT

The following equipment is required:

1. flow rate transfer standard, orifice type, with calibration traceable to NIST. (See Figure 4.1-6.)

    NOTE: **Transfer Standard Calibration Frequency** - Upon receipt and at one-year intervals, the calibration of the transfer standard orifice must be certified with a positive displacement standard volume meter (such as Rootsmeter) traceable to the National Institute of Standards and Testing (NIST). An orifice unit should be visually inspected for signs of damage before each use, and should be recalibrated if the inspection reveals any nicks or dents.

2. a water, water-and-antifreeze mixture (50/50), or oil manometer, with a 0- to 400-mm (0- to 16-in.) range and a minimum scale division to 1 mm (tenths of an inch).

3. variable transformer

3. thermometer capable of accurately measuring temperature over the range of -20° to 50°C (273° to 323° K) to the nearest ±1°C and yearly referenced to within ±2°C of an NIST or ASTM thermometer.

4. barometer capable of accurately measuring ambient barometric pressure over the range of 500 to 800 mm Hg (66 to 106 kPa)to the nearest millimeter of Mercury (mm Hg) and annually referenced within ±5 mm Hg of a barometer of known accuracy.

5. spare recorder charts, miscellaneous hand tools, calibration data sheets or station logbook, and 2-inch duct tape.

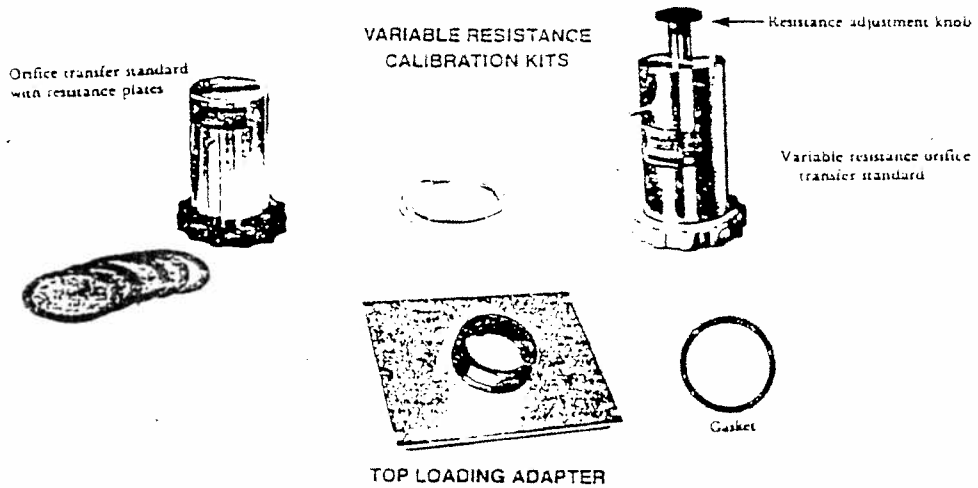

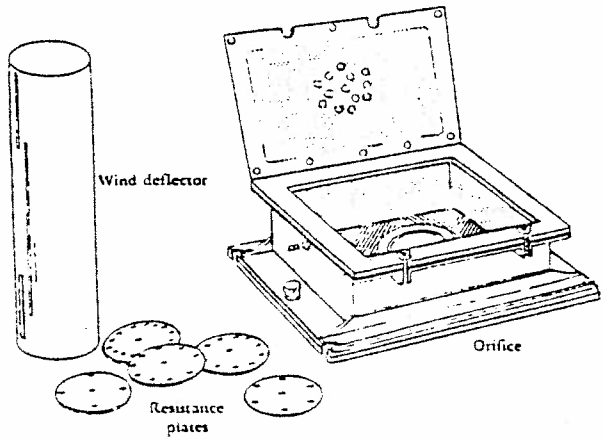

reference flow device (RefF device).

Typical orifice-type flow rate transfer standards.

Figure 4.1-6

4.1.2.3 CALIBRATION

Calibration of a high-volume (Hi-vol) sampler refers to establishing a mathematical relationship between the sampler's flow rate indicator and a known reliable standard flow. This calibration provides an accurate measurement of the sampler flow rate from which the volume of the sampled air can be calculated. Details of the calibration procedure vary depending on:

1. whether the calibration is to incorporate the geographical average barometric pressure and seasonal average temperature at the sampling site or specific pressure and temperature for the time of calibration.

2. the type of flow indicator used

3. whether the sampler is equipped with an automatic flow controller

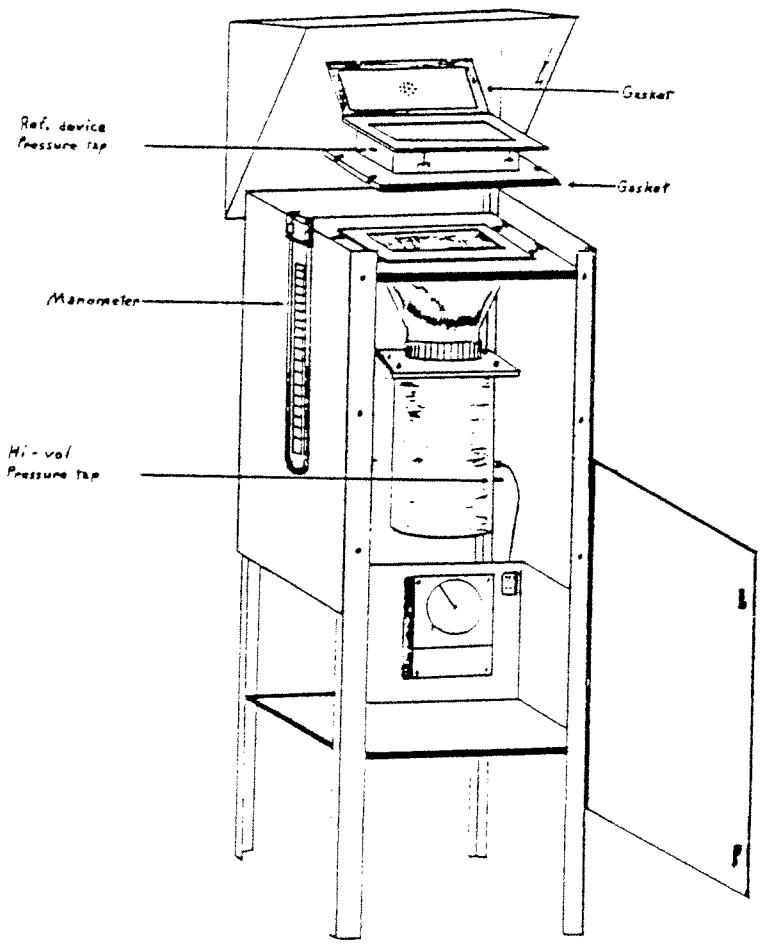

Figure 4.1-7

When the calibration is to incorporate averaged seasonal barometric pressure and temperature at the site, no further corrections of the indicated flow are required. The average barometric pressure for the site can be estimated from the altitude of the site by reducing the sea level pressure of 760 mm Hg by 26 mm Hg for every 1000 feet of altitude. The seasonal averaged temperature for a site can be estimated from on-site temperature readings or nearby weather station records over the season. Ideally, the averaged temperature reflects the temperature at the time of day at which the flow indicator would normally be read; however, an average temperature determined from 24-hour mean temperature records is acceptable. The seasonal averaged temperature should be within ±15°C of the local ambient temperature at the time the flow indicator is read. If daily temperature changes at the site are too drastic to be represented by a seasonal average ±15°C, actual temperature corrections should be used each time a flow reading is obtained.

This flow recorder must be capable of providing a continuous record. The recorder may be an electronic recording device or a pressure recorder with an orifice device. It must be possible to calibrate the flow rate measurement device to a flow rate that is readable (in corresponding units) to the nearest 0.02 std m^3/min). In conjunction with the continuous flow indicator, electronic mass flow meter analog outputs, orifice or orifices located in the sample airstream together with a suitable pressure indicator (such as manometer or aneroid pressure gauge), or any other type of flow indicator (including rotameter) having comparable precision and accuracy may be used.

4.1.2.3.A FLOW CALIBRATION PROCEDURES - HI-VOLS WITH MASS FLOW CONTROLLERS

Hi-vol samplers may be equipped with a mass flow controller. A mass flow controlled Hi-vol sampler has two ways of indicating flow:

1. externally (such as orifice and pressure recording devices attached to the Hi-vol motor)

2. internally (such as an analog meter or electronic recorder)

Externally operated flow indicators are sensitive to changes in both temperature and pressure and therefore need to be calibrated with the flow controller disabled and in the same manner as all non-flow-controlled Hi-vols.

Internally operated flow indicators monitor the mass flow controller's air mass regulatory circuitry. The air mass regulatory system operates independent of site temperature and pressure as does the analog flow indicator. Therefore, no temperature or pressure compensations are required once the relationship of indicated flow to std m^3/min is established.

With either the external or internal types of flow indicator, the mass flow controller must be removed from the system. The motor assembly would then be directly connected to the output of the daytimer. A variable transformer is then connected to

the input of the daytimer. Using the variable transformer to adjust the motor speed, it would then be possible, with a calibrated transfer standard installed, to establish a flow indicator calibration curve. At this point of the calibration procedure, those steps outlined in the PM_{10} calibration procedure (Section 4.2.2) will be followed. There is one primary difference between the PM_{10} and TSP: calibration procedures; that being, for PM_{10}, the calibration operational setpoint is contingent on the optimal actual air flow through the inlet head. The TSP method required only the TSP monitor be set at some point between 1.1 actual m^3/min and 1.7 actual m^3/min. Keeping this in mind, follow those procedures outlined in Section 4.2.1. To help reduce motor failure and extend brush life, it is recommended the TSP monitors be set at 1.3 std m^3/min.

4.1.2.3.B FLOW CALIBRATION PROCEDURES - HI-VOLS WITH VOLUME FLOW CONTROLLERS

The calibration procedure for Hi-vols with volume flow controllers is covered in the PM_{10} section, 4.2.6. There is one primary difference between the PM_{10} Volume flow Controlled system and the TSP method, that being, the PM_{10} method requires a specific manufacturer's suggested operational setpoint and the TSP method only requires the system operate between 1.1 std m^3/min and 1.7 std m^3/min. Keeping this mind, follow those procedures outlined in Section 4.2.6.

4.1.2.3.C FLOW CALIBRATION PROCEDURES - HI-VOLS WITHOUT FLOW CONTROLLERS

A flow calibration is required when

1. six months have passed from the last calibration (including shelf life)

2. any internal parts of the Hi-vol motor unit are replaced (brushes, armature, commutator, etc.)

3. motors are exchanged

4. Hi-vol flow rate(s) exceed QA/QC set limits (fails QA audit, falls outside QC limits for co-located sites, etc.)

4.1.2.4 EQUIPMENT PREPARATION

When a TSP monitoring system employs a 115 vac to 90 vac step-down transformer, the step-down transformer must be removed from operation while initially setting the visi-float. A variable transformer should be installed and set at the point that outputs 115 vac. The variable transformer should be connected to the input of the daytimer.

1. Disconnect the output of the seven-day timer from the input of the step-down transformer.

2. Disconnect the output of the step-down transformer from the motor.

NOTE: An elapsed timer may be connected to the output of the seven-day timer. It is intended that the Hi-vol motor be connected directly to the output of the seven-day timer to obtain line voltage (115 vac) to drive the Hi-vol motor.

3. Connect the output of the seven-day timer to the input of the Hi-vol motor.

4. Remove the filter cartridge or filter holder and filter.

5. Install the calibrating reference device equipped to operate with resistance plate #18 (see Figures 4.1-7 and 4.1-8). Tighten face plate nuts by alternating corners to ensure an even pressure and to avoid leaks.

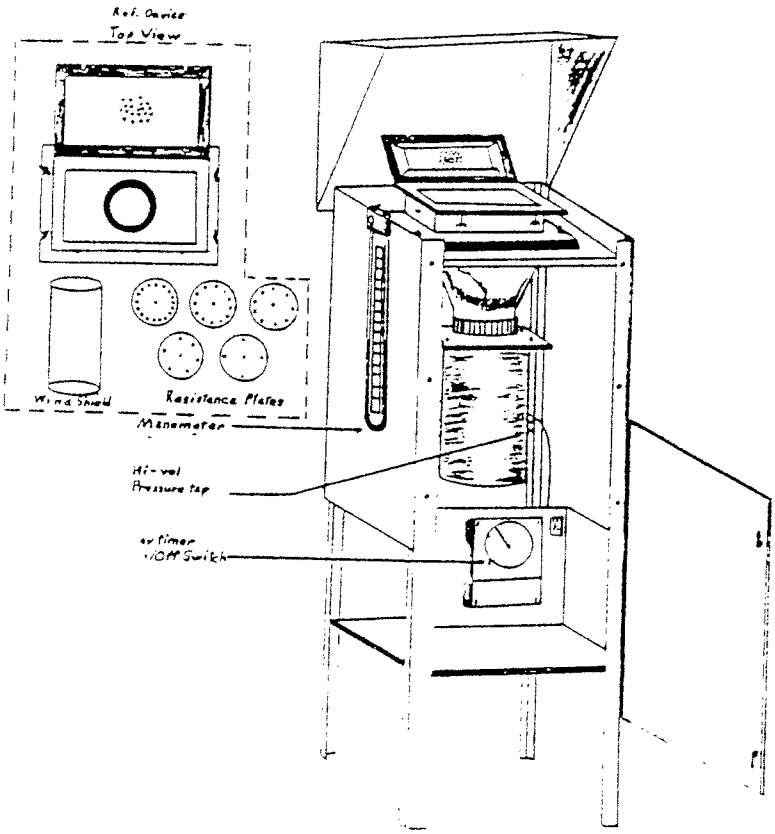

Figure 4.1-8

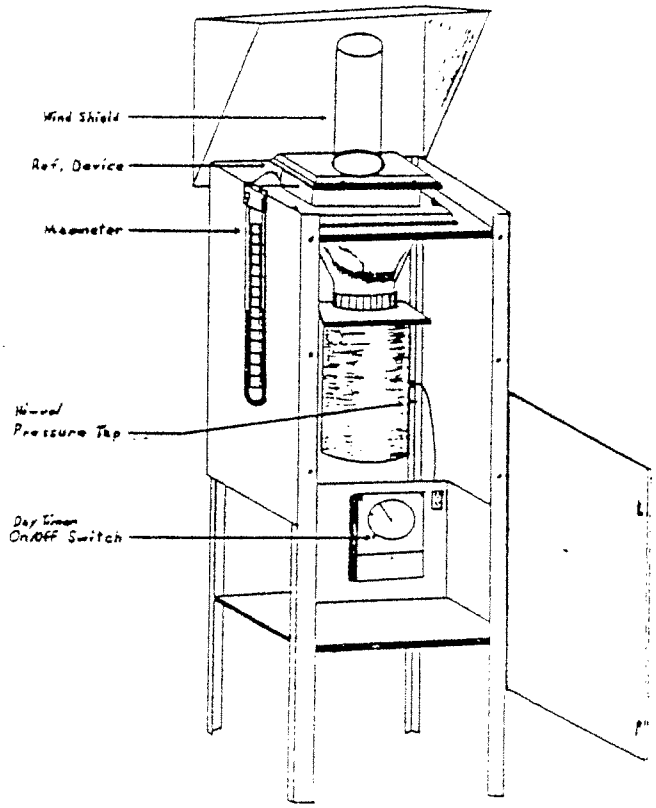

Figure 4.1-9

4.1.2.4.1 LEAK TESTING

To perform a leak test:

1. Close the top cover of the ref device and securely fasten the cover with the two wing nuts.

2. Ensure manometer is disconnected from ref device pressure tap (Figure 4.1-9).

3. Cover the manometer pressure tap with duct tape or crimp hose sufficient to stop air flow.

4. Ensure all gaskets are installed.

5. Cover air inlet with duct tape sufficient to stop air flow.

6. Turn on Hi-vol motor, by switching the seven-day timer on/off switch to ON (Figure 4.1-9).

7. With the back of your hand, feel the bottom of the Hi-vol motor for positive air pressure.

   NOTE: Visi-float measuring devices are only used on the short-body design Hi-vol motors. These motors have eleven holes on the bottom plate. Because of this design, there may be a small amount of air passing through the Hi-vol motor. This air is due to circulation between the holes from the turning motor and not as a result of a leak. The leak check is a very important point of the calibration procedure; if there is doubt, conduct another leak check.

If a leak exists, attempt to isolate it by listening for hissing sounds. Retighten all gasket areas. If the leak is still present, remove the reference device. Duct tape the air intake of the filter holder (Figure 4.1-7).

Recheck the bottom of the Hi-vol motor for air flow. If the air flow is gone, check all the gaskets and seals on the reference device and replace as necessary. If possible, use a different reference device when the gaskets or seals are found to be defective. At a minimum, the reference device should be checked against another transfer standard to ensure the calibration is still valid. If the air flow is still present, check to ensure the filter holder is installed correctly (not cross threaded). Also check to ensure the filter holder gasket is in place. Disassemble the Hi-vol motor and check

the internal motor gaskets and motor cushions (Figure 4.1-10). Replace as necessary. Reassemble the motor and filter holder assembly. Reinstall the reference device and perform another leak check. At this point, the Hi-vol system and reference device should be leak free. If not, carry out these recheck procedures until you are confident a leak-free system exists. When confident, remove the duct tape.

4.1.2.5 MANOMETER PREPARATION

1. Open both sides of the manometer by turning input valves counter-clockwise approximately 1.5 turns.

2. Check for an adequate level of fluid in the tubing. Fill to the zero mark of scale if required.

   NOTE: Do not inter-mix different types of indicating solutions.

3. Ensure the airways of the manometer are unobstructed. This is done by gently blowing on either input valve. There should be a smooth movement of the indicating fluid and it should return to a neutral, or balance, in the manometer tube.

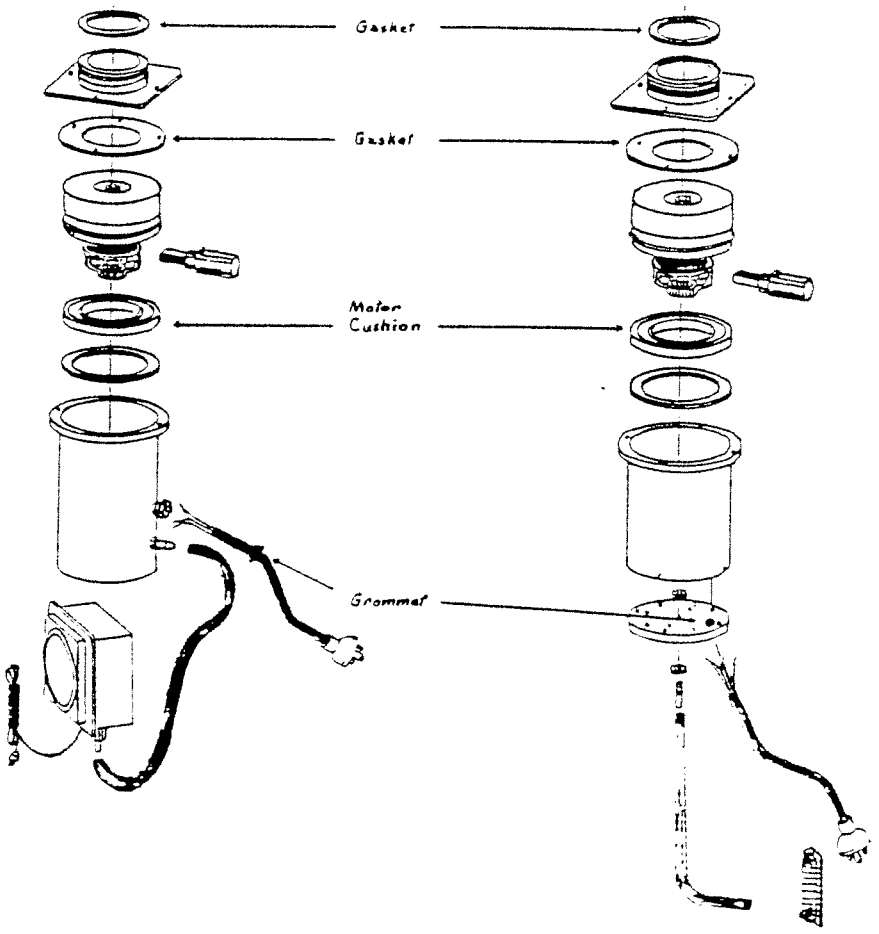

Figure 4.1-10

4. Connect the manometer to the reference device. Ensure that the connecting tube is not cracked and is securely attached at both ends.

4.1.2.5.1 SYSTEM SETUP

1. Turn on the Hi-vol motor and let it warm up to normal operating temperature (approximately 5 min.).

2. Connect the visi-float to the pressure tap of the Hi-vol motor. Ensure the tubing used is not cracked and is securely fitted at both ends.

3. Visi-floats have an adjustable orifice located at the top of the flowmeter. This orifice is adjusted by turning the top brass screw clockwise to lower the indicator ball, and counterclockwise to raise the indicator ball. At this point, set the indicator ball to 60 and tighten the brass locking nut. Make sure the visi-float still reads 60. If not, readjust. If it does, secure the brass screw and locking nut with "lock-tight," or some other substance designed to prevent the brass screw and locking nut from working loose during normal usage.

   NOTE: When reading the visi-float, the readings are taken from the middle of the ball.

4. The visi-float is now ready to be calibrated. Turn off the Hi-vol and reconnect the step-down transformer and elapsed timer.

5. Place a tag on the visi-float to identify the motor number and date calibrated. Also ensure there is an identical tag on the Hi-vol motor.

4.1.2.5.2 TRANSDUCER-FLOW METER PREPARATION - DIXON CHART RECORDER

The transducer flow meter type of flow indicator is a permanently mounted flow monitoring device which consists of:

1. a movable pen arm
2. a circular non-linear chart
3. a clock mechanism

   The electrical clock mechanism is activated when the day timing device is energized and de-activated when the day timing device shuts off. While the clock mechanism is operating, the circular chart rotates. The pen, which is monitoring the pressure tap of the Hi-vol motor, places a trace on the graph paper. Once properly calibrated, this tracer will indicate:

   a. approximate Hi-vol operation time
   b. any unscheduled stops
   c. air flow through the Hi-vol

d. improper Hi-vol operations

In preparation for calibration, the flow meter must be properly zeroed. Zeroing of the flow meter is a very important step and, once set, should not be changed until the next calibration. Zeroing is accomplished following the manufacturer's recommended procedures.

4.1.2.5.3 CALIBRATION PROCEDURE

The calibration procedure consists of three steps:

1. installing the calibration transfer standard (see Figure 4.1-8).

2. comparing and recording indicator flow meter readings with manometer readings.

3. plotting a calibration curve from the collected data.

NOTE: In the event that any of the internal components of the motor assembly have been replaced; i.e., brushes, armatures, etc., let the motor run for approximately 60 minutes to allow the new parts time to break in.

There are several types of transfer standards used in the Alaska Monitoring Network. For the purposes of this calibration, the reference flow device (Figure 4.1-6) will be used. To calibrate:

1. Remove the filter cartridge.

2. Install the reference flow devices (ref device) directly to the filter holder assembly with plate 18 installed.

3. Perform a leak check.

4. Prepare manometer for operation.

5. Connect the variable transformer.

6. Turn on the Hi-vol motor and let it warm up to normal operating temperatures (approximately 5 minutes).

7. Connect the visi-float or rotameter to the Hi-vol pressure tap (Figure 4.1-3).

NOTE 1: Ensure the proper flow indicator is used with the proper Hi-vol motor assembly.

NOTE 2: If a pressure transducer type of flow indicator is in use, check to insure the connection between the transducer and the Hi-vol pressure tap is secure. Check all the tubing for cracks.

8. Fill in all the available information on the Hi-vol calibration work sheet (Figure 4.1-11).

9. While reading the middle of the visi-float ball, adjust the variable transformer until the middle portion of the visi-float ball rests on the closest whole number.

10. Record the visi-float reading on the calibrator work sheet under "I, sampler flow rate indicator" (Figure 4.1-11).

11. Ensure the manometer is straight. Add both scaled deflections from the zero point (Figure 4.1-12).

12. Record the ΔH on the calibration work sheet under ΔH pressure drop across orifice.

13. Shut off the Hi-vol and replace the number 18 plate of the ref device with the number 13 plate (Figure 4.1-8).

14. Turn on the Hi-vol and repeat steps 9 through 13.

NOTE: When changing resistance plates, ensure no leaks exist. If a hissing noise exists or if there is any question of leaks, perform a leak check.

15. repeat step 13 for at least 5 points.

4.1.2.5.4 CALIBRATION CALCULATIONS

At this point, the field calibration worksheet must be completed. All site information, the ΔH pressure drop (in inches of indicating fluid) of the ref. device, and the indicated flow of the Hi-vol must be recorded on the worksheet. Next the ΔH values must be corrected to standard conditions. Using the ref. device plate 18's ΔH reading (Figure 4.1-13) as an example.

ΔH to standard (std) ΔH Calculation

$$\Delta H \text{ std} = \sqrt{8.68\ (755 \text{ mm Hg}/760 \text{ mm Hg})\ (298^\circ K/277^\circ K)}$$

$$\Delta H \text{ std} = \sqrt{8.68\ (0.9934)\ \ (1.0758)}$$

$$= \sqrt{9.2763}$$

$$\Delta H \text{ std} = 3.046$$

Rev. June 1990

High-Volume Air Sampler Calibration Worksheet

Site location _____

Date _____ (1) Barometric pressure, P_2 mm Hg (or in.) _____

Calibrated by: _____ (2) Temperature, T_2 (K) _____

Sampler No _____ Serial No _____

Transfer std. type: _____ Serial No _____

Optional: P_{std} = 760 mm Hg (or 29.92 in.)

Average barometric pressure: P_a = _____

Seasonal average temperature: T_a = _____

No	1 ΔH Pressure drop across orifice (in) or (cm)	$\sqrt{\Delta H \left(\frac{P_2}{P_{std}}\right)\left(\frac{298}{T_2}\right)}$	(X) 3 Q_{std} (from orifice certification std. m³/min)	4 I Sampler flow rate indication (arbitrary)	5 (Y) For specific pressure and temperature corrections (see Table 2.1)	5 (Y) For incorporation of average pressure and seasonal average temperature (see Table 2.1)
					☐ I or ☐ $\sqrt{I\left(\frac{P_2}{P_{std}}\right)\left(\frac{298}{T_2}\right)}$ or ☐ $I\sqrt{\left(\frac{P_2}{P_{std}}\right)\left(\frac{298}{T_2}\right)}$	☐ I or ☐ $\sqrt{I\left(\frac{P_2}{P_a}\right)\left(\frac{T_a}{T_2}\right)}$ or ☐ $I\sqrt{\left(\frac{P_2}{P_a}\right)\left(\frac{T_a}{T_2}\right)}$
1						
2						
3						
4						
5						
6						

Least Aquares Calculations

Linear regression of Y on X: $Y = mX + b$, Y = appropriate expression from Table 2.1, $X = Q_{std}$

Slope (m) = _____ Intercept (b) = _____ Correlation Coefficient (r) = _____

To determine subsequent flow rate during use: $X = 1/m\,(Y - b)$ $\boxed{Q_{std} = 1/m\,(\text{appropriate expression from Table 2} - b)}$

Figure 4.1-11

Figure 4.1-11

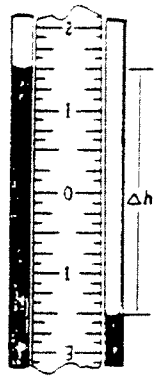

Δh = 1½" + 1½" = 3"

Figure 4.1-12

Where:

8.68 is the uncorrected ΔH in inches of indicating fluid

755 is the ambient barometric pressure in mm Hg (millimeters of mercury)

760 is the standard barometric pressure in mm Hg (millimeters of mercury)

298 is the standard temperature in °K (degrees Kelvin)

277 is the ambient temperature in °K (degrees Kelvin)

Next, the ΔH standard values must be converted to m^3/min standard air flow. Using the information supplied with the calibration certificate of the ref device used (Figure 4.1-14), the ΔH standard values are converted to standard m^3/min. air flow.

Example:

Qstd = (3.0457 + .0882)/2.0720

Qstd = l.5125 std m^3/min

Where: 3.046 is the standard ΔH

.0882 is the intercept of the ref device calibration

2.0720 is the slope of the ref device calibration

convert the remaining std ΔH std to m^3/min air flow

4.1.2.5.5 INDICATED FLOW CALCULATION

The indicated flow reading must now be converted to standard conditions. Using the No. 1 sampler flow rate indication (arbitrary) reading in Figure 4.1-13 as an example:

$$\text{Std indicated flow} = 52\ \sqrt{(755\text{mmHg}/700\text{mmHg})\ (298^\circ\text{K}/277^\circ\text{K})}$$

$$52\ \sqrt{(0.99342)\ (1.07581)}$$

$$52\ \sqrt{1.06873}$$

$$(52)(1.03380)$$

$$\text{Std indicated flow} = 53.8\ \text{Std}$$

Convert the remaining indicated flows to standard conditions and be sure to mark the appropriate expression used. (See Figure 4.1-15.) Record the std indicated flow readings in column 5.

4.1.2.5.6 PLOTTING THE CALIBRATION CURVE

Using the data in column 3 as the x values and column 5 as the y values, determine the calibration relationship. By plotting the corresponding x and y values on a graph (Figure 4.10-16A) the linearity of the curve can be determined. The preferred method, however, is to

1. plot the x and y values.

2. calculate the linear least squares regression, slope (m), intercept (b), and correlation coefficient of the calibration curve.

When the linear least squares regression is calculated, a minimum of three points on the line must be calculated, plotted and a line drawn connecting the points. Once this has been accomplished, each data point should be compared against the regression line to determine if each data point is within ±5 percent of the regression line. All points falling outside the ±5 percent must be retaken and the regression recalculated and plotted. The ±5 percent should also be drawn in as shown on Figure 4.1-16B in dashed marks.

These calculations are as follows:

The linear least square regression

It is recommended a hand-held scientific calculator capable of linear regressions be obtained for this purpose. The manufacturer-recommended operating procedure should be followed. However, if the manual method is to be used, follow the

Rev. June 1990

High Volume Air Sampler Calibration Worksheet

Site location: Floyd Dryden School, Juneau, Alaska

Date: 12/13/86 (1) Barometric pressure, P_2 mm Hg (or in.): 755 mm Hg

Calibrated by: D. Dvorak (2) Temperature, T_2 (K): 277 °K

Sampler No.: Floyd Dryden TSP "B" Serial No.: 112-14-86

Transfer std. type: Reference Device Serial No.: 2

Optional: P_{std} = 760 mm Hg (or 29.92 in.)

Average barometric pressure: P_a = _____

Seasonal average temperature: T_a = _____

No	1 ΔH Pressure drop across orifice (in) or (cm)	$\sqrt{\Delta H \left(\frac{P_2}{P_{std}}\right)\left(\frac{298}{T_2}\right)}$	(X) 3 Q_{std} (from orifice certification std. m³/min)	4 I Sampler flow rate indication (arbitrary)	5 (Y) For specific pressure and temperature corrections (see Table 2.1)	5 (Y) For incorporation of average pressure and seasonal average temperature (see Table 2.1)
					☐ I or ☐ $\sqrt{I\left(\frac{P_2}{P_{std}}\right)\left(\frac{298}{T_2}\right)}$ or ✓ $\sqrt[4]{\left(\frac{P_2}{P_{std}}\right)\left(\frac{298}{T_2}\right)}$	☐ I or ☐ $\sqrt{I\left(\frac{P_2}{P_a}\right)\left(\frac{T_a}{T_2}\right)}$ or ☐ $\sqrt[4]{\left(\frac{P_2}{P_a}\right)\left(\frac{T_a}{T_2}\right)}$
1	8.68	3.046	1.513	52	53.8	
2	7.45	2.822	1.404	48	49.6	
3	6.30	2.595	1.295	44	45.5	
4	5.24	2.366	1.184	40	41.4	
5	4.22	2.124	1.068	36	37.2	
6						

Least Squares Calculations

Linear regression of Y on X: Y = mX + b, Y = appropriate expression from Table 2.1, X = Q_{std}

Slope (m) = 37.29181 Intercept (b) = -2.71086 Correlation Coefficient (r) = 0.9999

To determine subsequent flow rate during use: X = 1/m (Y - b) | Q_{std} = 1/m (appropriate expression from Table 2) - b)

Figure 4.1-13

UNITED STATES ENVIRONMENTAL PROTECTION AGENCY
Research Triangle Park, North Carolina 27711

Certificate of Calibration

ORIFICE SERIAL No.: S/N 2 (Rec. 10)
OWNER: STATE OF ALASKA

Calibration Date: 03/31/86
Calibrated by: P. B. CHAMBERLAIN
Primary Standard: Roots Meter No. 4064851

CALIBRATION REGRESION EQUATIONS:

$$Q_{std} = [\sqrt{(H)(P/P_{std})(298/T)} + .08821] / 2.0720$$

(r2= .99987)

$$Q_a = .7704\sqrt{(H)(T)/P_b)} + .0428$$

(r2= .99987)

Where: Qstd = Flow rate measured in STANDARD cubic meters per minute (std m3/min, i.e. corrected to 25 degrees C and 760 mm Hg) as prescribed in the Federal Reference Method for TSP (40 CFR Part 50, Appendix B).

Qa = Flow rate measured at AMBIENT conditions (T, P), m3/min.

H = Pressure drop measured with a monometer at the pressure tap on the transfer standard orifice, in inches H2O.

P = Ambient barometric pressure at the time and place of use, any units.

T = Ambient temperature at the time and place of use, K (Degrees C + 273).

Pstd = Standard barometric pressure, units consistent with P (760 mm.Hg, 1013 millibars, 29.92 inches Hg, 100 kPa).

Pb = Ambient barometric pressure in mm Hg.

r = Correlation coeficient.

ENVIRONMENTAL MONITORING SYSTEMS LABORATORY
QUALITY ASSURANCE DIVISION

STANDARDS LABORATORY

$$Q_{th} = .4826\sqrt{(H)} + .0428$$

Where:

Qth = Qtheoretical = Flow rate that would be observed at 25 degrees C and 760 mm Hg.

EPA(RTP)436

Figure 4.1-14

EXPRESSIONS FOR DETERMINING INDICATED FLOW RATE

Type of Flow Rate Measuring Indicators	For Actual Pressure and Temperature Corrections (to Standard Conditions)	When Geographic Average Pressure and Seasonal Temperature have been Incorporated in the Sampler's Indicated Flow Calibration
Mass flow controller with analog or digital meter output	$I\ std = I$	I
Orifice and pressure indicators	$I\ std = \sqrt{(P_a/760)(298/T_a)(I)}$	$\sqrt{I}$
Rotameters or orifice and pressure recorder having a square root scale	$I\ std = I\sqrt{(P_a/760)(298/T_a)}$	I

Where: $I\ std$ = the indicated flow readings corrected to standard conditions

I = the uncorrected indicated flow readings

P_a = the on-site barometric pressure, in millimeters of mercury (mm Hg) or barometric pressures readings obtained from the nearest local airport. These readings must not be corrected to sea level; however, they may need to be corrected for a difference in elevation between the sampler site and the airport (26 mm Hg for every 1,000 feet of elevation) (mm Hg = inch. Hg x 25.4).

T_a = on-site temperature in degrees Kelvin (°K)
°K = °C + 273
°C = (°F - 32) 5/9

760 = standard barometric pressure in mm Hg

298 = standard temperature in °K

Example: Assuming an uncorrected indicated flow reading of 50 and a temperature and pressure reading of 280° K and 758 mm Hg respectively (in this example a rotameter is used as the flow indicator).

$$I\ std = 50\sqrt{(758/760\ (209/280)}$$

$$50\sqrt{(0.997368)\ (1.064286)}$$

$$50\sqrt{(1.061485)}$$

$$50\ (1.030284)$$

$$I\ std = 51.5$$

Figure 4.1-15

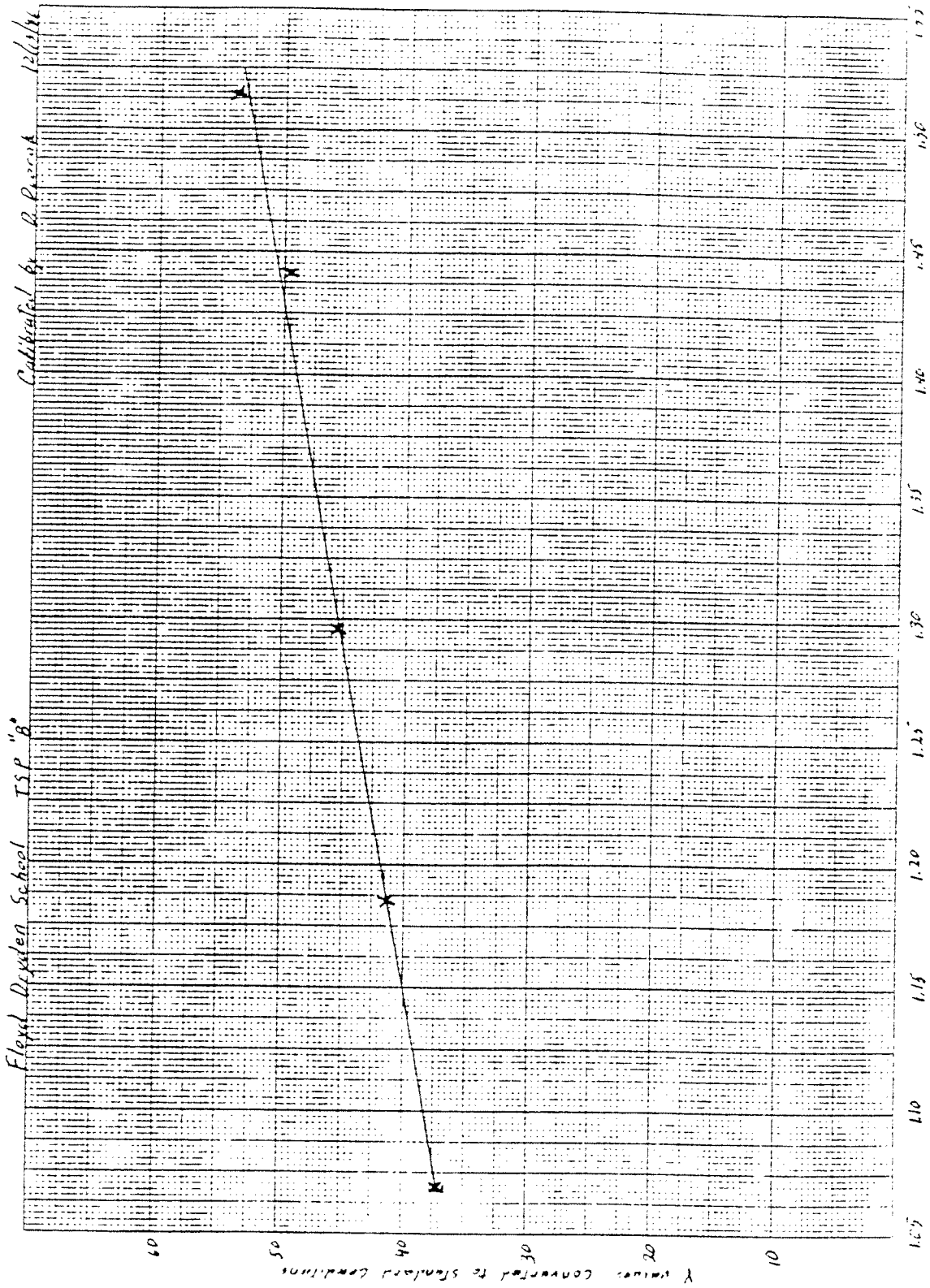

Figure 4.1-16A

Figure 4.1-16A

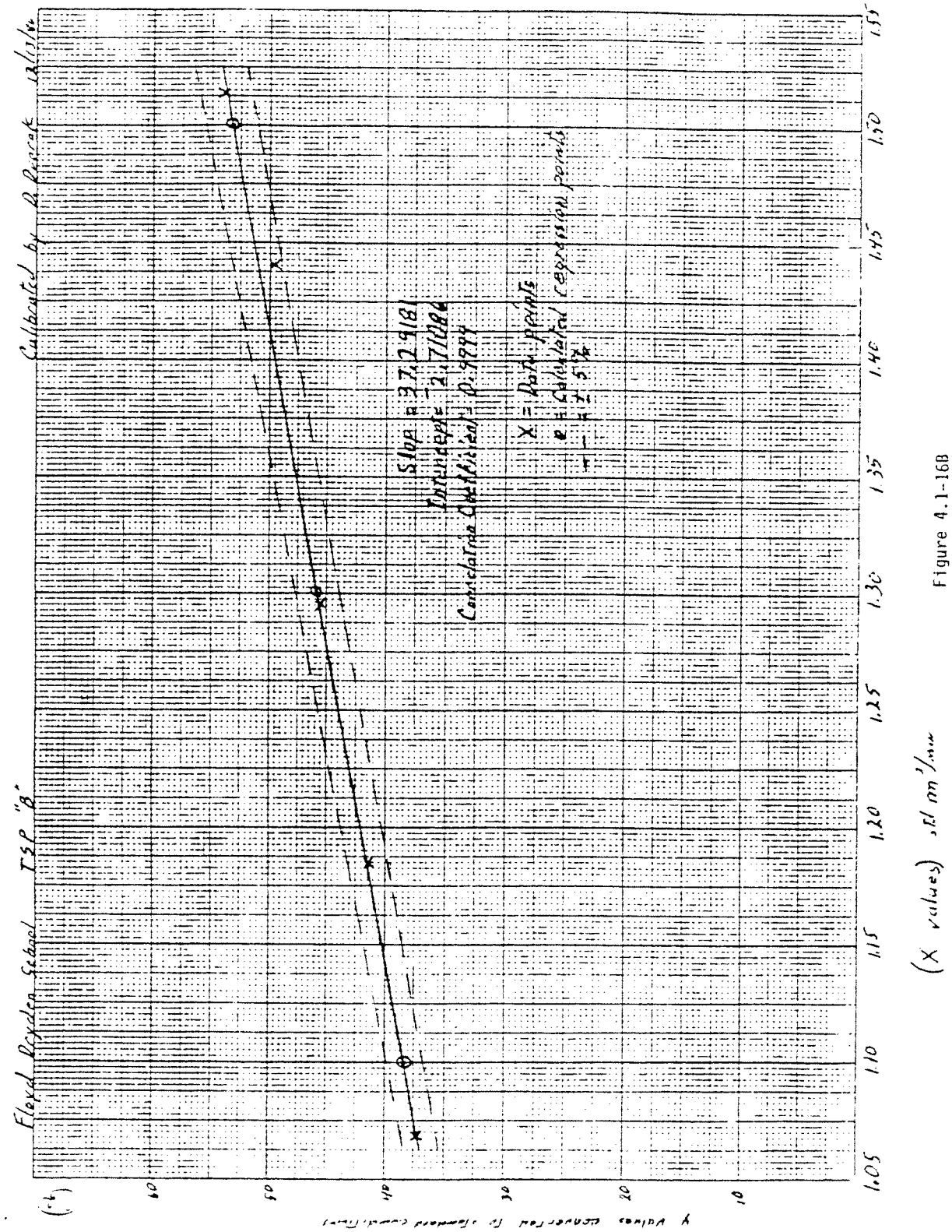

Figure 4.1-16B

Figure 4.1-16B

procedures found in Volume 1 of the Quality Assurance Handbook for Air Pollution Measurement Systems, Appendix J Calibrations as it pertains to linear regressions.

Calculation of the ±5 percent

To determine if each indicated flow value found in column five falls within the ±5 percent limitations, first Y cal must be calculated.

Y cal = m Qstd + b

Where m = the slope of the calibration linear regression (Figure 4.1-16)

Qstd = the values found in column three of the calibration worksheet of Figure 4.1-13

b = the intercept of the calibration linear regression Figure 4.1-13

The percent difference for each indicated flow value can now be determined by comparing each Y cal with its corresponding std indicated flow value (column 5, Figure 4.1-13).

$$\% \text{ difference} = \frac{Y - Ycal}{Ycal} \times 100$$

Using No. 1. as an example:

Qstd = 1.513 Std m^3/min

std indicated flow (Y) = 53.8

slope (m) = 37.29181

intercept (b) = 2.71086

Ycal = (37.29181) (1.513) + (2.71086)

= 56.42251 + (2.71086)

Y cal = 53.7

$$\% \text{ difference} = \frac{53.8 - 53.7}{53.7} \times 100$$

$$= \frac{0.1}{53.7} \times 100$$

$$= .0019 \times 100$$

% difference = 0.19

It is acceptable to calculate percent differences for each Y value and document the percent differences on the calibration graph. An alternate procedure is to calculate the ±5 percent difference from the highest point of the linear regression line and the lowest point of the line, then plot the points and draw the ±5 percent lines on the graph (Figure 4.1-16B). As a final recommended QC check, a one-point flow check with a different ref device should be performed as an independent standard to ensure that the calibration is acceptable.

4.1.2.6 CALIBRATION OF PERIPHERAL EQUIPMENT

Before a TSP sampling program is undertaken, a wide variety of sampling and analysis equipment must be calibrated. The calibration activities are summarized in Figure 4.1-18 at the end of this section. Many of these activities will also serve as initial acceptance checks. All data and calculations required for these activities should be recorded in a calibration logbook in which a separate section is designed for each apparatus and sampler used in the program.

4.1.2.6.A ANALYTICAL BALANCE

The calibration must be verified 1) when the analytical balance is first purchased, 2) any time it has been moved or subjected to rough handling, and 3) during routine operations when a standard weight cannot be weighed within ±0.5 mg of its stated weight. A set of three to five standard weights covering the range normally encountered in weighing filters should be weighed. If the weighed value of one or more of the standard weights does not agree within ±0.5 mg of the stated value, the balance must be recalibrated or adjusted by the manufacturer. The results of all balance checks must be recorded in a logbook.

4.1.2.6.B RELATIVE HUMIDITY INDICATOR

The relative humidity indicator used for monitoring the filter conditioning environment should be checked against a wet/dry bulb psychrometer or the equivalent every six months. At least a two-point calibration should be made by comparing readings made in the conditioning environment against those made outdoors or perhaps just outside of the conditioning room. If the difference between the indicator and the corresponding psychrometer readings is within ±0.6 percent, it is all right to continue using the relative humidity indicator; if not, the indicator must be recalibrated or a new one must be purchased. Record the results of the relative humidity indicator checks in the calibration logbook.

4.1.2.6.C ELAPSED-TIME METER

Every six months the elapsed-time meter should be checked against a timepiece of known accuracy, either on site or in the laboratory. If the indicator shows any signs of being temperature-sensitive, it should be checked on site during each season of the year. A gain or loss >2 min/24-hour period warrants adjustment or replacement of

the indicator. The results of these checks must be recorded in the calibration logbook.

4.1.2.6.D ON-OFF TIMER

The on-off timer should be calibrated and adjusted quarterly by using a calibrated elapsed-time meter as the reference. An example calibration procedure for one type is presented below. Figure 4.1-17 depicts the connection diagram for calibration of a particular kind of timer. The steps in the procedure are:

1. Plug a correctly wired timer into an electrical outlet.

2. Set the timer to the correct time.

3. Set the on and off time-trippers for a 24-hour test.

4. Plug the test light into one of the output plugs, and plug an elapsed-time meter into the other.

5. Check the system by manually turning the switch on and off.

6. Allow the system to operate for the 24-hour test period, and determine the time elapsed on the elapsed-time meter. If the elapsed time is 24 hours ±30 min., the timer is acceptable for field use; if not, adjust the tripper switches and repeat the test. Record the calibration data in a timer calibration log such as that shown in Figure 4.1-18 at the end of this section.

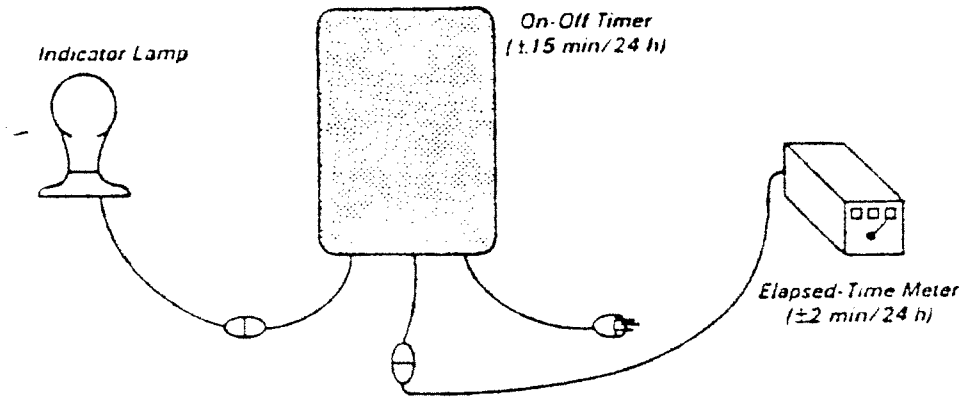

Diagram of a timer calibration system.

Figure 4.1-17

Table 4.1-1

Activity Matrix for Calibration of Equipment

Equipment	Acceptance Limits	Frequency and Method of Measurement	Action if Requirements Are Not Met
Analytical balance	Indicated weight = true weight ±0.0005 g	Gravimetric test-weighing at purchase and during periodic calibration checks; use three to five standard weights covering normal range of filter weights	Have balance repaired and/or recalibrated.
Relative humidity indicator	Indicator reading = psychrometer reading ±6%	Compare with reading of wet bulb-dry bulb psychrometer on receipt and at 6-month intervals.	Adjust or replace to attain acceptance limits.
On-off timer	±15 min./24 hr	Check at purchase and quarterly with elapsed-time meter	Adjust or replace to attain acceptance limits.
Elapsed-time meter	±2 min./24 hr	Compare with a standard timepiece of known accuracy at receipt and at 6-month intervals.	Adjust or replace time indicator to attain acceptance limits.
Flow-rate transfer standard	Indicated flow rate (from previous calibration) = actual flow rate ±2%	Check at receipt and at 1-year intervals against positive-displacement standard volume meter; recalibrate or replace orifice unit if damage is evident.	Recalibrate and adopt new calibration curve.
Sampler	Indicated flow rate = actual individual calibration point ±5% of linearity	Calibrate with certified transfer standard on receipt, after maintenance on sampler and any time audit or QC one-point flow check deviates more than 7%.	Recalibrate.

Rev. June 1990

Time Calibration Log

Site location number	Timer number	Date		Elapsed-time indicator serial number	Test period	Elapsed-time indicator reading	Accuracy	Technician (signature)
		Start	Stop					

Figure 4.1-18

4.1.3 OPERATIONS

4.1.3.0 FILTER WEIGHING INSTRUCTIONS

The Alaska Ambient Air Monitoring Network only uses EPA supplied filter media. Independent projects must utilize filters which meet the requirements of the reference method (40 CFR 50, Appendix B). Filters are pre-marked with identification numbers. If filters are received without identification numbers, each filter must be permanently numbered prior to use.

The following filter weighing procedure is to be used for the TSP Hi-Vol method:

4.1.3.0.A INITIAL FILTER INSPECTION AND WEIGHING PROCEDURE

1. Prior to weighing, backlight each filter and inspect for pinholes, foreign particles, loose filter fibers, torn and/or crumpled edges, etc. Filters with visible imperfections will be discarded. Note any unusable/discarded filters in the filter logbook.

2. Equilibrate each filter a minimum of 24 hours in a conditioned environment a) Temperature: 15°- 30°C with the specific temperature not varying more than ±3°C; b) Relative Humidity: between 20 to 50 percent RH and not varying more than ±5 percent RH).

3. Following filter equilibration(s), weigh each filter to the nearest milligram. For each filter weighed, record the following: 1) filter ID number, 2) date, 3) operator's initials, 4) temperature, and 5) percent relative humidity (%RH).

4.1.3.0.B QUALITY CONTROL PROCEDURES FOR FILTER WEIGHING

1. Disposable gloves will be worn during the handling of all filters. Gloves help eliminate interferences from body oils, hygroscopic particles, and other foreign materials.

2. Prior to weighing filters, the analytical balance's calibration must be checked with:

   a. a zero tare weight determination

   b. two NIST-traceable check standard weights (verified yearly to a primary source) that bracket the expected unexposed filter weight(s) and verify the linearity and accuracy of the analytical balance's calibration curve. Typically standard weights from 3.000 grams to 6.000 grams will bracket the unexposed filter weight(s). All zero and check standard determinations must be documented in the filter logbook adjacent to the corresponding filter determinations made during that time frame. Include:

i. standard weight identification number
ii. true mass weight value
iii. found mass weight value
iv. difference (true wt.-found wt.)

All zero and check standard weight determinations must agree within ±.5mg of the true value.

3. Equilibrated filters will be taken directly from the filter conditioning chamber to the analytical balance. This will minimize the risk of other source contamination and the bias affects of uncontrolled room percent RH. It is recommended that the chamber percent RH and the room percent RH difference be kept to a minimum. This will help to eliminate unsteady analytical balance readings due to water loss or gain.

4. At a minimum, perform:

   a. A QC check standard weight for every batch of 15 filters or less and at the end of every filter batch weighed.

      Found values must agree within ±.5mg of the true value. When found values exceed the ±.5mg acceptance limits, all previous batch filters back to the last acceptable check standard must be reweighed. All filter and QC check std weighings must be documented in the filter logbook. Any corrective action must also be documented.

   b. a zero check before and after each filter weighing. When found value exceeds ±.5mg from zero, rezero the analytical balance and reweigh the filter. Document all filter and zero checks in the filter log book. Any corrective action taken must also be documented at the same time.

5. Seven percent of all unexposed and exposed filters must be reequilibrated (see #2 under "Initial Filter Inspection") and reweighed. Filter reweighs must be within the ±5mg acceptance limits of the original filter weight determinations. When a filter reweigh check exceeds the ±5mg, the corresponding filter batch must be reweighed. [A filter batch is a conveniently grouped number of filters that are conditioned and weighed during the: a) same timeframe, and b) same filter conditioning environment.] Document all filter reweighs and any corrective action(s) taken in the filter logbook.

6. It is recommended that current up-to-date precision and accuracy Quality Control Charts be maintained for:

a. zero checks
b. QC check standards
c. unexposed filter reweighs
d. exposed filter reweighs.

7. Weighed filters must be stored in a clean environment. Place filters in their original container separated by a clean sheet of white bond paper. Care must be taken not to bend, fold or tear filters before collecting a sample.

4.1.3.1 HI-VOL FILTER INSTRUCTIONS

There are two methods for installing a clean sampling filter:

1. filter cassette
2. filter adapter.

4.1.3.1.A FILTER CASSETTE PREPARATION AND INSTALLATION

The filter cassette is the recommended method for installing a clean sampling filter. The method has two advantages:

1. The filter can be loaded in the laboratory.

2. The filter remains protected while being carried to the site.

To install the filter in the filter cassette holder, perform the following:

1. Remove the two thumb screws securing the top plate to the bottom plate.

2. Separate the two plates.

3. Check to ensure that the filter gaskets are not damaged (i.e., cracked or compressed).

4. Center the filter on the base plate with the filter ID number facing down.

5. Carefully place the top plate over the filter and reassemble the cassette. Ensure the cover is securely in place and fully covers the filter.

At the monitoring site:

1. Remove the exposed filter cassette.

2. Install the unexposed filter cassette.

3. Center the cassette on the four posts.

4. Secure the cassette by tightening the wing nuts in a criss-cross pattern. This will help to ensure an even pressure on the filter gasket.

4.1.3.1.B FILTER ADAPTER INSTALLATION

To install a clean filter in the filter adapter assembly, perform the following:

1. Loosen the hold-down wing nuts and remove the face plate.

2. Install the unexposed filter with the number facing down.

3. Center the filter.

4. Reinstall the face plate so that the gasket forms an airtight seal on the outer edges of the filter.

5. Secure the face plate and tighten the wing nuts in a criss-cross pattern. This ensures an even pressure on the face plate gasket.

4.1.3.1.C MONITOR SITE OPERATIONAL SETTINGS

1. After the filter has been properly installed on the Hi-vol sampler, close the top of the shelter. Turn on the day timing device (Figure 4.1.-3). Allow the sampler to operate for approximately five minutes to establish the RUN temperature condition.

2. While the sampler is warming up, begin documenting the required information on the field operator form (filter number, date, operator, etc.). (See Figure 4.1-21.)

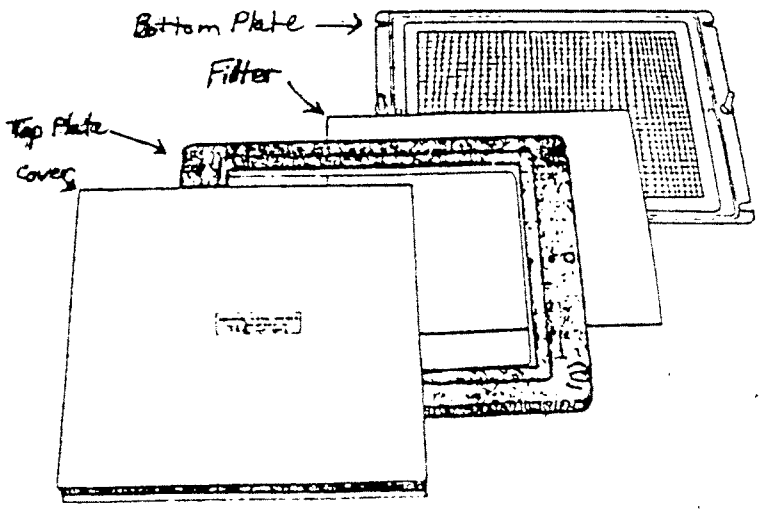

Hi-vol filter cartridge.

Figure 4.1-19

3. After the system has stabilized, record the indicated flow reading:

   a. For Dixon chart recorders, tap lightly on the outside of the recorder to ensure the pen is not sticking.

   b. For visi-floats, ensure the visi-float is in a vertical position when taking the flow measurement readings. All visi-float measurements will be read at the middle of the ball indicator when the ball is at eye level.

4. Turn off the sampler by switching the day timing device to "OFF."

5. Using the calibration curve, determine the sampler's flow rate. If the flow rate is outside the acceptable range (1.1 m^3/min. to 1.7 m^3/min.), adjust the sampler voltage or use a different filter.

   NOTE: If a substantial flow adjustment is required, it is recommended that the sampler be recalibrated or, at a minimum, a one-point flow check be taken to ensure that the calibration is still valid.

6. Following the manufacturer's operating instructions, set the day timing device to operate for a 24-hour period beginning at midnight on the specified sampling day.

   NOTE: The TSP Hi-vol sampling frequency network will follow the USEPA-specified 6-day sampling schedule. The sampling frequency may be increased to meet the desired sampling objectives (every day, every other day, or every third sampling schedule). Figure 4.1-22 shows a typical 6-day sampling schedule. The sampling duration is 24 hours (00:00 to 24:00 AST).

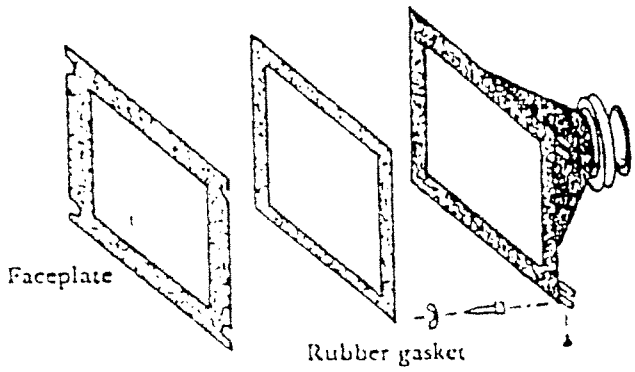

. Hi-vol sampler filter adapter assembly.

Figure 4.1-20

TSP
FIELD OPERATOR FORM

SITE LOCATION _____ TIME INDICATOR _____ IN _____

OPERATOR NAME _____ FLOW INDICATOR _____ IN _____

FILTER NUMBER	DATE FILTER RAN	T	P	INST.	BY	T	P	COL.	BY	T	P	INDICATED TIME START	STOP	INDICATED FLOW START	STOP	COMMENTS

T = SITE TEMPERTURE, IN DEGREE CELSIUS (°C)
P = SITE BAROMETRIC PRESSURE IN INCHES OF MURCURY (in/Hg)
INST. = INSTALLED
COL. = COLLECTED

Rev. June 1980

Figure 4.1-21

7. If an elapsed timer is installed, either record the start time or reset the timer to zero. Record the start time on the field operator form.

8. Double-check to ensure that everything is set properly and that all required information is recorded on the operator form. If any unusual conditions exist, note them on the operator form.

NOTE: No on-site pressure or temperature measurements are necessary if the sampler flow indicator does not require pressure or temperature corrections (e.g., a mass flowmeter) or if average barometric pressure and seasonal average temperature can be obtained by on-site measurements or from a nearby weather station. Barometric pressure readings obtained from airports must be station pressure, not corrected to sea level, and may need to be corrected for differences in elevation between the sampler site and the airport. For samplers having flow recorders but not constant flow controllers, the average temperature and pressure at the site during the sampling period should be estimated from the weather bureau data or other available data.

4.1.3.1.D FILTER RETRIEVAL

1. As soon as practical following the sampling period, operate the sampler to again establish run-temperature conditions.

2. Record the flow indicator reading on the field operator form. Stop the sampler. Record the barometric pressure and the ambient temperature on the field operator form.

3. For filter cassette cartridge removal, a) open the sampler top, b) cover the filter cassette cartridge, and c) remove it from the sampler. Care must be taken to minimize particulate loss during transport. For this reason, filter cartridges must be transported horizontally with the cover side up.

4. For filter removal from filter adapter assemblies, a) open the sampler top, b) Remove the faceplate and gasket, c) carefully remove the filter. Touch only the outer edges of the filter. Fold the filtering half lengthwise so only the particulate matter faces inward. Place the folded filter between a clean, folded sheet of white bond paper. Place the filter and protective cover in a clean manila folder. Care must be taken to ensure particulates are not lost during transport.

5. Record the ending time or elapsed time on the field operator form. It is recommended this time be recorded from an elapsed minute timer. However, the time can be read from the day timer or from a continuous flow recorder. The sample period must be 1440 ±60 minutes for a valid sample. If the sample collection time is outside the ±60-minute acceptance criteria, DO NOT discard the filter. Submit the sample and identify, in writing, to the supervisor (QA person) the type of error, and the appropriate corrective action that was taken to avoid future data loss.

ALASKA AIR SURVEILLANCE SYSTEM 1990 SAMPLING SCHEDULE

Every 6th Day

January	February	March
5	4	6
11	10	12
17	16	18
23	22	24
29	28	30

April	May	June
5	5	4
11	11	10
17	17	16
23	23	22
29	29	28

July	August	September
4	3	2
10	9	8
16	15	14
22	21	20
28	27	26

October	November	December
2	1	1
8	7	7
14	13	13
20	19	19
26	25	25
		31

Figure 4.1-22

6. Record on the field operating form any factors that might be pertinent to the measurement data's integrity, such as meteorological conditions, construction activities, fires, or high road-dust levels, etc.

7. If the sampler is to run again at midnight, install a new filter. To minimize possible premature contamination of a filter, load the filter into the sampler as close as practical to the sample collection start time.

8. If exposed filters are to be transported any significant distance prior to gravimetric analysis, extreme care for sample integrity is to be taken. Hand deliver by the operator or a trained courier is the preferred method.

4.1.3.1.E FILTER INSPECTION

Retrieve the filter in the filter cassette cartridge and transfer the filter to the protective manila folder. Use the following precautions during this procedure:

1. Gently remove the filter by the extreme corners to avoid damage. Inspect the filters for any damage that may have occurred during sampling. If insects are embedded in the sample deposit, remove them with Teflon-tipped tweezers and disturb as little of the sample deposit as possible. If more than ten insects are observed, refer the sample to the supervisor for a decision on acceptance or rejection of the filter for analysis. Fold the filter in half lengthwise with the collected particulate matter facing inward and the filter ID number facing outward. Place the folded filter inside a clean, folded, white bond paper. The filter and protective cover should then be placed in a manila folder until ready for filter equilibration and post-weighing. Document any filter damage or other anomalies that would affect the integrity of the filter analysis.

2. When placing the filters in the equilibration chamber, check the filter for fuzzy or non-existent borders. If these conditions exist, replace the filter gasket. (See Figure 4.1-23.)

4.1.3.1.F EXPOSED FILTER EQUILIBRATION

1. Place the cover sheet and filter in the equilibration chamber. Record the time, date, temperature and percent relative humidity at the time the equilibration process started on the filter cover sheet (or in a permanent, bound logbook).

2. Equilibrate each filter a minimum of 24 hours. It is recommended that a standardized time cell be established for the equilibration of filters prior to weighing (i.e., 24-hour minimum and 72-hour maximum). A tightly controlled equilibration time cell will establish greater mass weight measurement precision due to more uniform percent RH on the filter surfaces and interstitial spaces.

4.1.3.1.G FILTER WEIGHING AND ARCHIVAL

The filter post-weighing procedure follows the filter pre-weighing procedure. Filters that have been post-weighed will be returned to a suitable storage box or other container. Each exposed filter will be separated by white bond paper and stored in a secure environment free of contaminants. All exposed filters will be archived for a minimum of three years. Filters that may be subject to additional analyses may require special storage and handling.

4.1.3.2 EQUIPMENT MAINTENANCE

Scheduled or preventive maintenance of the sampling equipment reduces voided samples, downtime, and remedial maintenance. Because the sampling equipment is operated only intermittently, the frequency of maintenance is a function of the actual hours of use. Normally, two or three preventive maintenance activities are required each year. When possible, maintenance is best performed in the laboratory rather than in the field. Motors on which maintenance has been performed can then be carried to the field for installation and calibration. Table 4.1-2 summarizes the quality assurance activities of major maintenance checks. All maintenance activities and site information (equipment types, serial numbers, calibration dates, acceptance testing, and installation dates) will be recorded in a maintenance logbook.

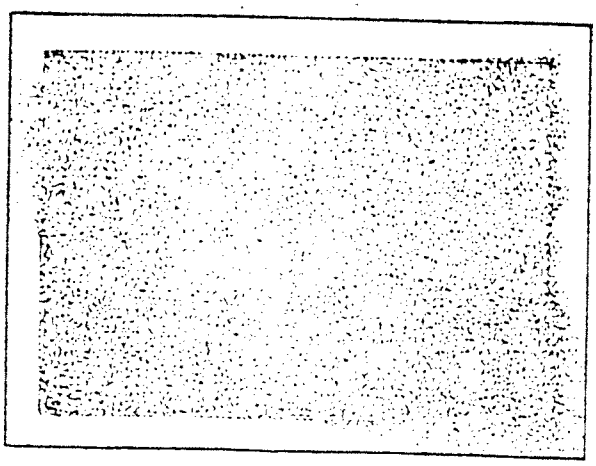

Fuzzy or nonexistent filter border.

Figure 4.1-23

4.1.3.2.A SAMPLER MOTOR

Motor brushes usually require replacement after 400 to 500 hours of operation at normal line voltage (115 VAC). The procedure is as follows:

1. Replace the brushes before they are worn to the point that damage can occur to the commutator of the Hi-vol motor. The optimum replacement interval must be determined from experience.

2. Follow the manufacturer's instructions for replacing the brushes.

3. Recalibrate the high-volume sampler after the brushes are replaced. Do not recalibrate the motor until after an initial break-in period for the proper seating of the brushes against the armature; this period usually requires running the sampler for several hours with the motor unloaded.

4. Refer to the flow diagram in Figure 4.1-23 for the various steps required for motor maintenance.

5. Record all sampler maintenance operations (with dates performed and the operator's initials) in the sampler logbook and on a gummed label (Figure 4.1-24) attached to the sampler.

EXAMPLE OF A GUMMED LABEL FOR A HIGH-VOLUME SAMPLER

Hi-Vol Motor Number _____

Site Location _____

Last Maintenance _____ Last Calibration _____

Checked by _____

Next Maintenance Due _____

Calibration Due _____

Figure 4.1-24

4.1.3.2.B FACE PLATE OR CARTRIDGE GASKET

A worn face plate or filter cartridge gasket is characterized by a gradual blending of the interface between the collected particulates and the clean filter border. Any decrease in the sharpness of this interface indicates the need for a new gasket.

1. Remove the old gasket with a knife.

2. Clean the surface properly.

3. Seal a new gasket to the face plate with rubber cement or some other suitable adhesive.

4. Record all gasket replacements with dates and operator's initials in the sampler maintenance logbook.

Table 4.1-2

ACTIVITY MATRIX FOR MAINTENANCE

Equipment	Acceptance Limits	Frequency and Method of Measurement	Action if Requirements Are Not Met
Sampler motor	400-500 hour of motor brush operation; no malfunction	Visually check upon receipt and after each 400 hours of operation	Replace motor brushes; perform other maintenance as indicated.
Face plate or cartridge	No leaks at the filter seal	Visually check after each sampling period.	Replace the gasket.
Rotameter	No foreign materials; stable operation	Visually check at each reading.	Clean; replace if damaged.
Motor	Leak-free fit	Visually check after each 400 hours of operation.	Replace gaskets.
Filter holder assembly	No leaks	Visually check after each 400 hours of operation.	Replace filter holder assembly

4.1.3.2.C ROTAMETER

1. Clean and recalibrate the rotameter of a sampler when the float behaves erratically or when moisture or foreign matter is detected in the rotameter.

2. Clean the rotameter prior to routine calibration (alcohol is a satisfactory cleaning solvent).

3. Refer to the flow diagram (Figure 4.1-25) for the required maintenance steps.

FLOW DIAGRAM FOR MAINTENANCE STEPS

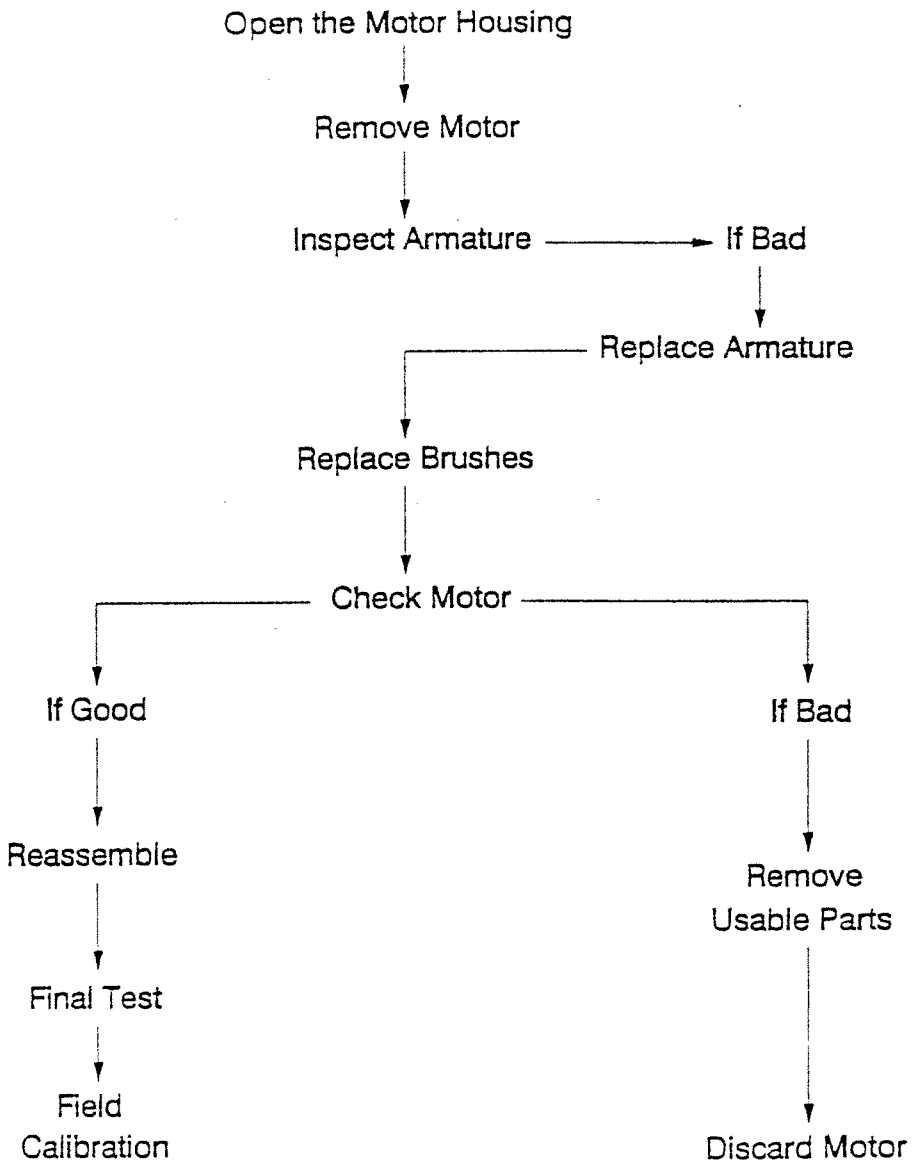

Figure 4.1-25

4.1.3.2.D SAMPLING HEAD

Leaks in the filter holder assembly occur infrequently. The welded seams and the condition of the guide pins on the top surface of the head should be visually checked initially. Should a defect be suspected, the following procedure should be followed:

1. Assemble the filter holder assembly to the motor.
2. Install a filter for resistance.
3. Apply a soap solution to the suspect problem area.
4. Disassemble the filter holder assembly.
5. Examine the inside of the head for soap bubbles.
6. Repair or discard the filter holder assembly if a leak is indicated by the soap solution being inside of the head.

MAINTENANCE SEQUENCE FOR ROTAMETER

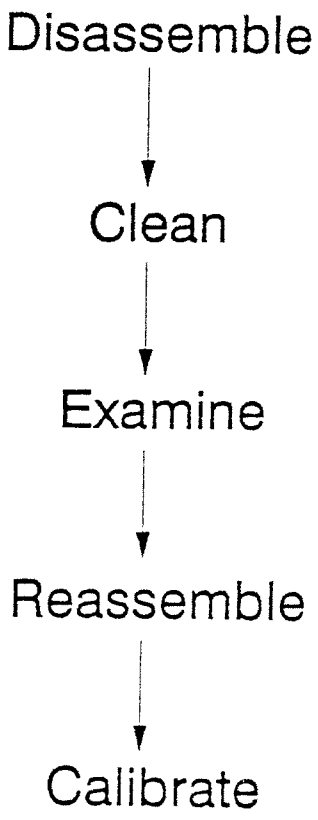

Figure 4.1-26

4.1.3.2.E MOTOR GASKETS

Two gaskets are used with each sampler motor. The top rubber gasket is approximately 3/16-inch thick and the bottom foam rubber gasket is approximately 3/4-inch thick.

1. Inspect both gaskets for wear or deterioration.
2. Replace if necessary.

4.1.3.2.F FLOW TRANSDUCER AND RECORDER

Routine maintenance is not required for this device. Should a malfunction occur, replace the old recorder with a new one.

4.1.4 DATA ACQUISITION, PROCESSING, AND REPORTING

State and local monitoring agencies acquire TSP data through manual methods. Processed raw data is received by the agency program or project manager from their station operator(s).

Program and project managers are responsible for:

1. acquiring all raw data.

2. processing the data (and all other relevant SAROAD site information) in SAROAD report format.

3. certifying the integrity and validity of the reported data, including a report on reasons for missing or invalid data.

4. reporting the data on a quarterly basis to the ADEC Air Program Data Base Manager. The data is to be provided on magnetic media to avoid additional data entry errors.

4.1.4.1 DATA QUALITY CONTROL

To ensure that only reliable, accurate, complete, representative and comparable data is reported to the ADEC Air Program Data Base Manager, the following Quality Control (QC) activities will be performed on each set of reported data:

1. Re-equilibrate and reweigh 7 percent of the exposed filters. Recalculate the filter net weight (sample catch weight). The recalculated filter net weight must agree within ±5 mg of the original filter weight. If not, re-equilibrate, reweigh, and recalculate all sample filters in the respective batch. Correct any errors. Document the problem(s) and the appropriate corrective action(s) taken to report reliable data.

2. Check 7 percent of the data for transcription error. If a transcription error is found, correct the problem. Recheck all data in the respective data batch for transcription correctness. Document the problem(s) and the appropriate corrective action(s) taken to report reliable data.

3. Recalculate 7 percent of all data: a) sample weight measurements, b) sample flow measurements, and c) sample time measurements. Recalculations must agree within a round-off error of the original sample calculation. If not, recalculate all data in the respective batch. Correct any errors. Document the problem(s) and the appropriate corrective action(s) taken to report reliable data.

4. Conduct a one-point flow check once per month. The flow rate must be: a) within 1.1 to 1.7 m^3/min., and b) within ±7 percent of the flow rate true value. If the one-point flow rate check fails either of the above two requirements: a) identify the problem; b) correct the problem; c) invalidate all data to the last acceptable one-point flow check, flow performance audit, or flow calibration; and d) document the problem(s) and the corrective action(s) taken to return the TSP monitor to acceptable flow rate operations.

5. Visually inspect all sample information data sheets (flow calibration information, operator forms, data reduction forms, filter logbooks, etc.). Ensure all necessary information is recorded and complete.

6. Every sixth day an agency's designated co-located sampler must operate. The co-located sampling precision must be less than ±20 Relative Percent Difference (RPD) for values greater than 20 μg/std m^3 air.

4.1.4.2 CALIBRATION STANDARDS

The program or project manager is responsible to ensure the following calibration standards are certified yearly against a National Institute of Standards and Testing (NIST) primary source:

1. thermometer(s)

2. flow transfer standard (ref flow device, etc.)

3. percent RH meter

4. barometer

5. analytical balance (capable of indicating values to .0001g and a minimum measurement accuracy of ±0.2 mg)

6. standard check weights

4.1.4.3 STATISTICAL TRACKING

All equipment will be maintained and documented in current, up-to-date maintenance logbooks. All repairs, maintenance, calibrations, etc., will be recorded, signed, and dated.

The program or project manager will ensure that the following X-R and X-S charts are maintained up to date:

1. X-R Charts

    a. co-located precision checks

b. exposed filter reweight checks

2. X-S Charts

a. Flow rate accuracy checks for each TSP monitoring unit
b. Standard weight checks for each balance

NOTE: Refer to USEPA Quality Assurance Handbook for Air Pollution Measurement Systems: Volume I, Principles, Appendix H, Control Charts for directions on establishing and maintaining control charts.

3. The SAROAD Daily Data Form will be used for reporting TSP results to the ADEC. Reports submitted via magnetic media follow the same format for coding The ADEC sets 2 $\mu g/m^3$ air as the TSP Method Detection Limit (MDL). Values less than 2 $\mu g/m^3$ will be reported as 0 on the SAROAD Daily Data Form. Figure 4.1-26 illustrates how the SAROAD Daily Data Form is to be completed. Figure 4.1-27 is a blank SAROAD data form. The procedure follows:

1. Fill in the appropriate site and date description blocks (1 through 18).

2. For each day data was collected, a start hour of 00 is needed (blocks 21 and 22).

3. Fill in the TSP parameter code, 11101, in blocks 23 through 27.

4. Fill in the TSP method code, 91, in blocks 28 and 29.

5. Fill in the TSP units code, 01, in blocks 30 and 31.

6. Fill in the decimal point code, 0, in block 32.

7. Fill in the data for a particular day in blocks 33 through 36. Report only whole numbers. To report invalid data, fill in 9999 or blocks 33 through 36.

8. For days on which no data exists, leave a blank in blocks 21 and 22 and blocks 33 through 36.

NOTE: Place only one digit in a space block.

4.1.4.4 ASSESSMENT OF MONITORING DATA FOR PRECISION AND ACCURACY

4.1.4.4.1 PRECISION

One or more monitoring sites within the reporting organization are selected for duplicate, collocated sampling as follows: for 1 to 5 sites, 1 site is selected; for 6 to 20 sites, 2 sites are selected; and for more than 20 sites, 3 sites are selected. Where

possible, additional collocated sampling is encouraged. Annual mean particulate matter concentrations of the selected sites should be among the highest 25 percent of the annual mean concentrations for all the sites in the network. If such sites are impractical, however, alternate sites approved by the ADEC Air Program Manager may be selected.

The two collocated samplers must be within 4 meters of each other, but at least 2 meters apart to preclude airflow interference. Calibration, sampling, and analysis must be the same for both collocated samplers and all other samplers in the network. One of each pair of collocated samplers is designated as the primary sampler from which samples will be used to report air quality for the site; the other is designated as the duplicate sampler. Each duplicate sampler must be operated concurrently with its associated routine sampler at least once a week. The operation schedule should be selected so that the sampling days are distributed evenly over the year and over the 7 days of the week. The every-6-day schedule used by many monitoring agencies is recommended. The measurements from both samplers at each collocated sampling site are reported. The percent of difference in measured concentrations (micrograms/cubic meter of air) between the two collocated samplers is used to calculate the precision as described in 40 CFR 58, Appendix A. Collocated TSP sampling precision must be less than ±20 Relative Percent Difference (RPD) for values $\geq 20\ \mu g/std\ m^3$ air.

4.1.4.4.2 ACCURACY

The accuracy of the TSP Hi-volume Sampler is assessed by auditing the performance of the sampler (at its specified flow rate) as described in Chapter 5. Both the audit flow rate and the corresponding sampler flow rate are reported. The percent difference between these flow rates is used to calculate accuracy as described in 40 CFR 58, Appendix A.

Two factors are essential for attaining accuracy data:

1. The measurement process must be under statistical control at the time of the measurement.

2. The combination of systematic errors and random variation (measurement errors) must yield a suitably small uncertainty.

The attainment of accurate data requires the performance of quality control checks, independent audits of the flow measurement process, careful documentation of monitoring data, and the use of equipment and standards that can be traced to appropriate primary standards.

24-Hour or Greater Sampling Interval

SAROAD Daily Data Form

2 Alaska Dept. of Environmental Conservation

1. Agency

Juneau, Alaska

City Name

Pine Street – Lemon Creek

Site Address

Revolution Concentrator 24 hr

Project | Time Interval

State | Area | Site: 0 2 0 2 0 0 1 5

Agency: F | Project: 0 1 | Time: 7 | Year: 8 7 | Month: 1 1

PM10 - SSI

Name PARAMETER Code	8 1 1 0 2		
method	units	dp	
5 2	0 1	0	

Day	St Hr			
0 1				
0 2	0	0	9 9 9 9	
0 3				
0 4				
0 5	0	0	1 2 1	
0 6				
0 7				
0 8	0	0	1 6	
0 9				
1 0				
1 1	0	0	7	
1 2				
1 3				
1 4	0	0	8	
1 5				
1 6				
1 7	0	0	1 0	
1 8				
1 9				
2 0	0	0	7	
2 1				
2 2				
2 3	0	0	4	
2 4				
2 5				
2 6	0	0	1 1	
2 7				
2 8				
2 9	0	0	9	
3 0				
3 1				

DP→ 4 3 2 1 0

Name PARAMETER Code			
method	units	dp	

4 3 2 1 0

Name PARAMETER Code			
method	units	dp	

4 3 2 1 0

Name PARAMETER Code			
method	units	dp	

4 3 2 1 0

Figure 4.1-27

Rev. June 1980

SAROAD Daily Data Form

24 Hour or Greater Sampling Interval

2

1 Agency

City Name

Site Address

Project Time Interval

State Area Site

2 3 4 5 6 7 8 9 10

Agency Project Time Year Month

11 12 13 14 15 16 17 18

Name PARAMETER Code

23 24 25 26 27

Name PARAMETER Code

37 38 39 40 41

Name PARAMETER Code

51 52 53 54 55

Name PARAMETER Code

65 66 67 68 69

Day St Hr 28 29 30 31 32

42 43 44 45 46

56 57 58 59 60

70 71 72 73 74

19 20 21 22 33 34 35 36 47 48 49 50 61 62 63 64 75 76 77 78

DP— 4 3 2 1 0 4 3 2 1 0 4 3 2 1 0 4 3 2 1 0

Figure 4.1-28

4.1.4.5 DATA QUALIFICATION

Sample data reported that is less than 75 percent complete must be accompanied by a missing data report. The missing data reports will identify:

1. the reasons for the missing data.

2. the appropriate corrective action(s) that were taken to return data reporting to acceptable levels of completeness.

4.1.4.6 DATA SUBMISSION

TSP data will be reported on a quarterly basis. The previous quarter's data will be reported to the ADEC Data Base Manager within one month following the end of the respective quarter. Independent projects performed in support of a permit application are not required to submit quarterly reports.