WASTEWATER DISCHARGE AUTHORIZATION PROGRAM

AND

ALASKA POLLUTANT DISCHARGE ELIMINATION SYSTEM

PERMIT FACT SHEET – DRAFT

Permit: AK0055891 – Petro Star, Inc., Valdez Refinery

DEPARTMENT OF ENVIRONMENTAL CONSERVATION

Wastewater Discharge Authorization Program

555 Cordova Street

Anchorage, AK 99501

Public Comment Period Start Date: **October 17, 2019**
Public Comment Period Expiration Date: **November 18, 2019**
Alaska Online Public Notice System

Technical Contact: Gerry Brown
Alaska Department of Environmental Conservation
Division of Water
Wastewater Discharge Authorization Program
555 Cordova Street, Third Floor
(907) 269-4874
Gerry.Brown@alaska.gov

Proposed issuance of an Alaska Pollutant Discharge Elimination System (APDES) permit to

PETRO STAR INC.

For wastewater discharges from

Valdez Refinery
Mile 2.5 Dayville Road
Valdez, Alaska 99686

The Alaska Department of Environmental Conservation (Department or DEC) proposes to issue individual permit AK0055891 – Petro Star Inc., Valdez Refinery (Permit). The Permit authorizes and sets conditions on the discharge of pollutants from this facility to waters of the United States and disposal to lands of the State of Alaska. In order to ensure protection of water quality and human health, the Permit places limits on the types and amounts of pollutants that can be discharged from the facility and outlines best management practices to which the facility must adhere.

This Fact Sheet explains the nature of potential discharges from the facility and the development of the Permit including:

- information on public comment, public hearing, and appeal procedures
- a listing of proposed effluent limitations and other conditions
- technical material supporting the conditions in the Permit
- proposed monitoring requirements in the Permit

Public Comment

Persons wishing to comment on, or request a public hearing for the Draft Permit for this facility, may do so in writing by the expiration date of the public comment period.

Commenters are requested to submit a concise statement on the Permit condition(s) and the relevant facts upon which the comments are based. Commenters are encouraged to cite specific Permit requirements or conditions in their submittals.

A request for a public hearing must state the nature of the issues to be raised, as well as the requester's name, address, and telephone number. The Department will hold a public hearing whenever the Department finds, on the basis of requests, a significant degree of public interest in a draft permit. The Department may also hold a public hearing if a hearing might clarify one or more issues involved in a permit decision or for other good reason, in the Department's discretion. A public hearing will be held at the closest practicable location to the site of the operation. If the Department holds a public hearing, the Director will appoint a designee to preside at the hearing. The public may also submit written testimony in lieu of or in addition to providing oral testimony at the hearing. A hearing will be tape recorded. If there is sufficient public interest in a hearing, the comment period will be extended to allow time to public notice the hearing. Details about the time and location of the hearing will be provided in a separate notice.

All comments and requests for public hearings must be in writing and should be submitted to the Department at the technical contact address, fax, or email identified above (see also the public comments section of the attached public notice). Mailed comments and requests must be postmarked on or before the expiration date of the public comment period.

After the close of the public comment period and after a public hearing, if applicable, the Department will review the comments received on the Draft Permit. The Department will respond to the comments received in a Response to Comments document that will be made available to the public. If no substantive comments are received, the tentative conditions in the Draft Permit will become the proposed Final Permit.

The proposed Final Permit will be made publicly available for a five-day applicant review. The applicant may waive this review period. After the close of the proposed Final Permit review period, the Department will make a final decision regarding permit issuance. A Final Permit will become effective 30 days after the Department's decision, in accordance with the state's appeals process at 18 AAC 15.185.

The Department will transmit the Final Permit, Fact Sheet (amended as appropriate), and the Response to Comments to anyone who provided comments during the public comment period or who requested to be notified of the Department's final decision.

Appeals Process

The Department has both an informal review process and a formal administrative appeal process for final APDES permit decisions. An informal review request must be delivered within 20 days after receiving the Department's decision to the Director of the Division of Water at the following address:

Director, Division of Water
Alaska Department of Environmental Conservation
555 Cordova Street
Anchorage, AK 99501

Interested persons can review 18 AAC 15.185 for the procedures and substantive requirements regarding a request for an informal Department review. See http://dec.alaska.gov/commish/review-guidance/informal-reviews for information regarding informal reviews of Department decisions.

An adjudicatory hearing request must be delivered to the Commissioner of the Department within 30 days of the permit decision or a decision issued under the informal review process. An adjudicatory hearing will be conducted by an administrative law judge in the Office of Administrative Hearings within the Department of Administration. A written request for an adjudicatory hearing shall be delivered to the Commissioner at the following address:

Commissioner
Alaska Department of Environmental Conservation at
P.O. Box 111800
Juneau AK, 99811-1800.

Interested persons can review 18 AAC 15.200 for the procedures and substantive requirements regarding a request for an adjudicatory hearing. See http://dec.alaska.gov/commish/review-guidance/adjudicatory-hearing-guidance/ for information regarding appeals of Department decisions.

Documents are Available

The Permit, Fact Sheet, application, and related documents can be obtained by visiting or contacting DEC between 8:00 a.m. and 4:30 p.m. Monday through Friday at the addresses below. The Permit, Fact Sheet, application, and other information are located on the Department's Wastewater Discharge Authorization Program website: http://dec.alaska.gov/water/wastewater/

Alaska Department of Environmental Conservation
Division of Water
Wastewater Discharge Authorization Program
555 Cordova Street
Anchorage, AK 99501
(907) 269-6285

Alaska Department of Environmental Conservation
Division of Water
Wastewater Discharge Authorization Program
410 Willoughby Avenue
Juneau, AK 99801
(907) 465-5180

TABLE OF CONTENTS

1.0 INTRODUCTION 6
1.1 Applicant 6
1.2 Authority 6
2.0 BACKGROUND 7
2.1 Facility Information 7
2.2 Wastewater Sources 8
2.3 Contact Storm Water/Process Wastewater Treatment and Disposal System 11
3.0 RECEIVING WATERBODY 15
3.1 Water Quality Standards 15
3.2 Water Quality Status of Receiving Water 16
4.0 EFFLUENT LIMITS AND MONITORING REQUIREMENTS 16
4.1 Basis for Effluent Limits 16
4.2 Effluent Limits and Monitoring Requirements (State Permit) 17
5.0 STORM WATER REQUIREMENTS (APDES) 24
5.1 SWPPP Development and Implementation 24
5.2 SWPPP Contents 24
5.3 SWPPP Documentation and Availability 24
5.4 Inspection Requirements 25
5.5 SWPPP Modifications 25
6.0 ANTIBACKSLIDING (APDES) 26
7.0 ANTIDEGRADATION (APDES) 26
7.1 Legal Basis 26
7.2 Receiving Water Status and Tier Determination 27
7.3 Tier 1 Analysis of Existing Use Protection 27
7.4 Tier 2 Analysis for Lowering Water Quality Not Exceeding Applicable Criteria 28
8.0 OTHER PERMIT CONDITIONS 28
8.1 Standard Conditions (APDES) 28
8.2 Quality Assurance Project Plan (APDES and State Permit) 28
8.3 Best Management Practices Plan (APDES and State Permit) 29
9.0 OTHER LEGAL REQUIREMENTS (APDES) 30
9.1 Endangered Species Act 30
9.2 Essential Fish Habitat 30
9.3 Ocean Discharge Criteria Evaluation 30

9.4 Permit Expiration 31
10.0 References 31

TABLES

Table 1: Pollutant Sources in the Process Wastewater 8
Table 2: Potential Pollutant Sources per Contributing Sumps in the Process Wastewater 9
Table 3: Contact Storm Water Flow Contribution from Precipitation 10
Table 4: Preliminary Pilot Test Results for 2.1 % Process Wastewater 12
Table 5: Results of Pilot Test Parameters of Concern 13
Table 6: Groundwater Quality from Fire Well 15
Table 7: Effluent Limitations for Treated CSW/PWW Disposal 18
Table 8: General Batch Operation Monitoring Frequencies and Sample Types 19
Table 9: Continuous Operation Monitoring Frequencies and Sample Types 20
Table 10: Groundwater Monitoring Requirements 23

FIGURES

Figure 1: Location Map – Valdez Refinery 32
Figure 2: Valdez Refinery Site Map 33
Figure 3: CSW/PWW Treatment System Process Flow Diagram 34
Figure 4: CSW/PWW Treatment System Piping and Instrumentation Diagram 35
Figure 5: Existing CSW Treatment System Piping and Instrumentation Diagram 36
Figure 6: Existing Subsurface Disposal System Piping and Instrumentation Diagram 37

LIST OF APPENDICES

APPENDIX A. FIGURES 32

1.0 INTRODUCTION

On March 8, 2019 the Alaska Department of Environmental Conservation (DEC or Department) received an application from Travis and Peterson Environmental Consulting, Inc. (TPECI) on behalf of Petro Star Inc. (PSI) for issuing Alaska Pollutant Discharge Elimination System (APDES) Individual Permit AK0055891 – PSI, Valdez Refinery (Permit). The Permit is a hybrid permit in that it includes both disposal to land for treated contact storm water commingled with process wastewater and noncontact storm water to waters of the United States (U.S.). This Fact Sheet was developed based on the application, the Phase II Process Wastewater & Storm Water Treatment Pilot Plant Results Report dated October 2018, and supplemental information obtained through the plan review and application process.

1.1 Applicant

This Fact Sheet provides information on the reissuance of the Permit for the following entity:

Permittee:	Petro Star Valdez Refinery
Name of Facility:	Valdez Refinery (refinery or facility)
APDES Permit Number:	AK0055891
Facility Location:	Mile 2.5 Dayville Road, Valdez, Alaska 99686 SW ¼ of Section 14, T9S, R6W, Copper River Meridian
Mailing Address:	3900 C Street, Suite 802, Anchorage, Alaska 99503-5966
Onsite Facility Contact:	Mr. Al Weber

Discharge and Disposal Summary

Disposal/Discharge	Description	Latitude	Longitude
Disposal 001	Contact Storm Water/Process Wastewater	61.0854	-146.2507
Discharge 002	Storm Water	61.0841	-146.2508

The disposal of contact storm water/process wastewater (CSW/PWW) is to the subsurface and storm water discharges are to Abercrombie Creek at the locations shown in Appendix A, Figure 1 and Figure 2**.**

1.2 Authority

Per Alaska Statutes (AS), Chapter 46, Title 3, Section 100(a) (AS 46.03.100(a)), "A person may not construct, modify, or operate a treatment works or dispose of liquid waste in the waters or onto the land of the State without prior authorization from the Department." Per AS 46.03.110(d), the Department may specify in a permit the terms and conditions under which the wastewater may be disposed of (or discharged). A violation of a condition contained in the Permit constitutes a violation of the Clean Water Act (CWA), or Alaska Administrative Code (AAC) 18 AAC 72, and subjects the permittee of the facility with the permitted disposal or discharge to the penalties specified in AS 46.03.760 and AS 46.03.761. The following sections discuss the regulatory basis for developing the hybrid Permit and covers both the discharge of wastewater to freshwater (Waters of the U.S.) and the disposal of wastewater into or onto land (groundwater).

1.2.1 APDES Program

The National Pollutant Discharge Elimination System (NPDES) Program regulates the discharge of wastewater to the waters of the U.S. For waters of the U.S. under jurisdiction of the State of Alaska, the NPDES Program is administered by DEC as the APDES Program. This is the first issuance of the Permit under authority of the APDES Program.

CWA Section 301(a) and 18 AAC 83.015 provide that the discharge of pollutants to waters of the U.S. is unlawful except in accordance with an APDES permit. For the discharge of storm water, the Permit is being developed per 18 AAC 83.115 and 18 AAC 83.120.

1.2.2 Wastewater Discharge Authorization Program

In addition to surface water discharges to waters of the U.S. under the APDES Program, the Wastewater Discharge Authorization Program (WDAP) also authorizes disposal of domestic or non-domestic wastewater into or onto lands of the State. WDAP authorizes land disposals under the regulatory authority of 18 AAC 72 – Wastewater Disposal. Per AS 46.03.100(b), DEC can authorize land disposal via plan review, permit, or a combination of both. For the portion of the hybrid Permit that is applicable to land disposal, DEC is developing the Permit per 18 AAC 72.600 in combination with plan reviews per 18 AAC 72.500. Section 1.2.3 provides a discussion of relevant plan reviews conducted under 18 AAC 72 that support issuance of the Permit.

1.2.3 Pilot Tests and Plan Reviews

The existing leach field at the refinery was installed in the spring of 2013 but did not undergo DEC review prior to construction. TPECI submitted record drawings and other data allowing for DEC to issue a final approval to operate the leach field in conjunction with a treatment system originally designed just for contact storm water. In 2018, TPECI coordinated a pilot test with DEC for additional treatment to account for contributing sources of process water commingled with contact storm water. The proposed pilot test was for treatment in addition to the existing contact storm water treatment systems consisting of physical separation, tray air stripping, and subsurface disposal in the existing leach field. A preliminary pilot test failed to due high iron from certain process wastewater sources. After removing wastewater sources high in iron, the final pilot test successfully demonstrated an ability to treat the combined CSW/PWW effluent. On February 8, 2019 TPECI submitted engineering plans to DEC for approval to construct. Approval to construct the proposed upgrades per the final pilot test was issued by DEC on June 24, 2019. Once the CSW/PWW is constructed, DEC will issue an interim approval to operate with conditions to conduct batch testing to confirm effluent quality prior to disposal in the existing leach field. This interim approval to operate will be extended until such time the treatment system has been adequately commissioned and the Permit becomes effective. See Sections 2.2 and 2.3 for more information on wastewater characteristics and treatment system components. See Section 2.3.5 for more information on the existing leach field.

2.0 BACKGROUND

2.1 Facility Information

The PSVR has been in operation since 1993 and is located on a 26-acre parcel off Dayville Road in Valdez, Alaska. The PSVR receives oil for the refinery from the Alyeska Trans-Alaska Pipeline System, prior to the Valdez Marine Terminal and produces 60,000 barrels per day (bbl/d) of jet fuel, marine diesel, heating fuel, turbine fuel and ultra-low sulfur diesel fuel. In addition to fuel production, the

facility operates a 12,000 bbl/d distillate hydro treater and associated processing units. Wastewater sources at PSVR are categorized as Contact Storm Water, Process Wastewater, and Noncontact Storm Water (storm water) in the following sections.

2.2 Wastewater Sources

The Permit authorizes wastewater disposal to the subsurface (Disposal 001) and a surface water discharge of storm water to Abercrombie Creek (Discharge 002). Discharge 002 is comprised solely of storm water that meets Alaska water quality criteria. Disposal 001 is comprised of contact storm water commingled with certain process wastewater treated by the upgraded treatment system. The following provides potential sources of wastewater treated at the refinery and disposed into the subsurface listed in decreasing contribution:

1. Contact Storm Water from Process Units
2. Hydrogen (H2) Unit Sump
3. Truck Rack Sump
4. Utility Building (Bldg) Sump
5. Distillate Hydro Treatment (DHT) Sump
6. Return Oil Sump
7. Crude Oil Sump
8. Process Area Sump
9. Flare Stock Sump
10. Sulfur Removal Unit (SRU) Sump (Excluded per Section 2.3)
11. Contaminant Pad Sump (Excluded per Section 2.3)
12. New Laboratory Sump (Excluded per Section 2.3)

Contact storm water contributions vary depending on precipitation as discussed in Section 2.2.2. Chemical inputs from eight process sumps, sumps 2 through 9, are estimated to contribute approximately 5,687 gallons per month (gal/mo). Sumps 10, 11, and 12 are isolated from the collection system and managed through alternative methods and are not treated and disposed to the subsurface. The following sections provide additional details concerning characterization of these sources.

2.2.1 Process Wastewater

The process wastewater at the PSVR is comprised of fluid wastes collected at process skids located throughout the refinery and channeled to a collection system consisting of 11 sumps. The proposed treatment system will only include eight of the 11 process sumps. The decision to exclude these sources was based on a preliminary pilot study, which indicated difficulties in treating iron (See Section 2.3). TPECI provided an inventory of the potential chemical inputs to each of the eight sumps contributing process wastewater to the collection system. Table 1 provides a list of each chemical and Table 2 provides a cross-reference to the chemical inventory and rate of contribution for each sump.

Table 1: Pollutant Sources in the Process Wastewater

Oils	Fuels	Chemical Additives	Other
1 – Crude 2 – Hydraulic 3 – Motor 4 –Synthetic	5 - Gasoline 6 – Diesel 7 – Kerosene 8 – Naptha 9 – Jet A	10 – Nalco 22305 (Antiscalant) 11 – ELIMIN OX (Carbohydrazide) 12 – Tri-ACT (Corrosion Inhibitor) 13 – Nalco EC-3015A (Anti-foulant) 14 – Nalco EC-1495A (Corrosion Inhibitor) 15 – Nalco EC-1010A (Corrosion Inhibitor)	16 - Glycol 17 - Paints 18 – Hydrochloric Acid 19 – Sulfur (as Sulfate)

Based on the list of potential pollutants, the parameters of concern include a broad range of hydrocarbons and metals associated with processing crude oil into fuel product. Hydrocarbons and metals are also anticipated to impart chemical oxygen demand (COD), five-day biochemical oxygen demand (BOD_5) as well sulfur compounds, total organic carbon (TOC), and oil and grease. While COD and BOD_5 are anticipated due to solubilized metals and hydrocarbons, respectively, spikes of COD and BOD_5 due to glycol should also be anticipated should there be a leak in the glycol loops. Table 2 provides a listing of these pollutants by reference number for each contributing sump.

Table 2: Potential Pollutant Sources per Contributing Sumps in the Process Wastewater

Location (Sump)	Oils	Fuels	Chemicals	Other	Rate (gal/mo)
H2 Unit (T-18621)	1,2,4	6,7,8	10,11,12	16,18	3,300
Truck Rack (T-1109)	4	6,7,8,9	---	---	1,800
Utility Bldg (T-1111)	2,3,4	5,6,7	---	16,17,19	150
DHT (T-14721)	1,4	6,7,8	13,14,15	16	124
Return Oil (T-1127)	1,4	6,7,8,9	---	16	98
Crude Unit (T-1128)	1,4	6,7,8	13,14,15	16	85
Process Area (T-1110)	1,4	6,7,8	13,14,15	16	85
Flare Unit (T-30701)	1,4	6,7,8	---	16	45
Total Monthly Process Wastewater Contribution					**5,687**

Prior to conducting the preliminary pilot test, TPECI attempted to characterize the sump wastewater by performing full suite analysis for a broad spectrum of pollutants. Unfortunately, the samples analyzed were too concentrated and had significant interference from oil, grease, solids, and other deleterious conditions which led to questionable or inconclusive results. Rather than requiring retesting of influent characteristics, DEC agreed to use the pilot study effluent results as a means to provide parameter-specific characterization. See Section 2.3 for discussions of effluent quality and applicable parameters of concern (POCs).

2.2.2 Contact Storm Water

The volume of contact storm water originating from process skids throughout the refinery is based on precipitation, or snow melt, over exposed process pad areas described in square feet (ft^2). Three process pads are shielded from precipitation and do not contribute contact storm water: the utility building, flare stack, and hydrogen unit. In addition, the tank farm secondary containment area (SCA) is not typically considered to be contact storm water but could be identified as such based on observation of a hydrocarbon sheen on the water surface or a spill event in the SCA. Hence, the tank farm SCA should be considered as a potential source contributing to the wastewater collection and treatment systems.

A hydrologic analysis provided by TPECI estimated the storm water inputs for precipitation events based on the 2-year and 25-year, 24-hour storms that occur in Valdez, Alaska. The 2-year, 24-hour (2-yr/24-hr) are intended to represent the average precipitation and the 25-yr/24-hr event is the probable maximum precipitation event. To estimate the average monthly precipitation, TPECI converted winter snowfall into equivalent inches of water, approximately 5.75 inches or 0.479 feet (ft). The 2-yr/24-hr event is estimated to be 3.11 inches (0.259 ft), while the 25-yr/24-hr event is estimated to be 4.95 inches (0.413 ft). The analysis demonstrated that precipitation will be the major flow contributor to the process wastewater collection system.

Table 3 provides estimates of flow contribution for contact storm water both with and without contribution from the SCA as well as the percentage of process water based on the estimated 5,687 gal/mo.

Table 3: Contact Storm Water Flow Contribution from Precipitation

Location (Sump)	Area (ft^2)	2-yr/24-hr (gal)	25-yr/24-hr (gal)	Monthly Average (gal)
Return Oil (T-1127)	2,496	4,854	7,655	8,962
Crude Unit (T-1128)	11,156	21,696	34,213	40,055
DHT (T-14721)	9,053	17,606	27,764	32,504
Process Area (T-1110)	3,075	5,980	9,430	11,040
Truck Rack (T-1109)	39,803	77,409	122,068	142,909
Subtotal No SCA	65,583	127,545	201,130	235,470
Percent Process (%)	---	4.46	2.83	2.42
Tank Farm SCA	177,427	345,060	544,133	637,034
Total with SCA	243,010	472,605	745,263	872,504
Percent Process (%)	---	1.20	0.76	0.65

The contact storm water from the locations described above are anticipated to have varying concentrations of hydrocarbons, metals, total dissolved solids (TDS). Due to sheet flow to the collection system contact storm water could experience periods of elevated concentrations of total suspended solids (TSS) depending on the severity of the precipitation event and general housekeeping around the process units. Note also that the original characteristics of noncontact storm water is anticipated to change significantly when commingled with process wastewater containing higher concentrations of pollutants prior to treatment. Based on the range of possibilities, the percentage of process wastewater commingled with contact storm water could range from 0.65 % to 4.46 %. See Section 2.3.3 for how this range of process wastewater is bracketed by those used in the final pilot test for the treatment system.

2.2.3 Storm Water (APDES)

Storm water that has not come in contact with industrial activities at the PSVR is managed separately from the contact storm water and is discharged from several manually controlled outfalls. Currently, refinery storm water is covered under a Multi-sector Storm Water General Permit authorization AKR06AA59 but will be transferred to the Permit upon the effective date. The following provides outfall descriptions for noncontact storm water as identified on Figure 2:

- Storm Water Outfall 1- located at the northwest corner of the property. Drainage from the west side of facility, including roads flows to this outfall and discharges to an undeveloped area with a vegetative buffer.
- Storm Water Outfall 2-located at the north center of the property. Runoff from the parking area and access flow to this outfall and discharge to an infiltration pond.
- Storm Water Outfall 3- located at the northeast corner of the property. Drainage from the east side of facility, including roads flows to this outfall and discharges to a settling pond. This pond is hydraulically connected to Abercrombie Creek.

Each of the outfalls are controlled by a manual gate valve and storm water is visually inspected for sheen prior to discharge. In the event that any sheen is detected in the culverts, the contaminated storm water is collected via vacuum truck and discharged to Tank-1113 for treatment, as Contact Storm Water.

When no sheen is observed, the water is pumped from the tank farm sump, over the berm and discharged into the infiltration pond at Storm Water Outfall 02, at the north side of the facility. Storm water that is observed to have a sheen is routed from the tank farm sump via the truck rack sump to Tank -1113, to be treated and disposed as contact storm water.

2.3 Contact Storm Water/Process Wastewater Treatment and Disposal System

Prior to proposing additional wastewater treatment units, TPECI conducted pilot test at a scale of approximately 10:1 to ensure the proposed treatment system would adequately treat of CSW/PWW. Pilot testing scenarios were developed based on estimated water balances surrounding anticipated precipitation for contact storm water as described in Section 2.2.2 and an inventory of process wastewater generated in the process units discussed previously in Section 2.2.1. The following section describes the pilot testing, which led to the ultimate selection of treatment process units (See Figure 3 through Figure 6.

2.3.1 Pilot Test Configuration

To demonstrate the functionality of the proposed full-scale wastewater treatment design, PSI and TPECI constructed a 1/10th scale model treatment plant within a controlled environment similar to that of the operating conditions of the full scale system. All pilot test system operations were designed to replicate the 1/10th scaling of the full system throughput, approximately 880,000 gal/mo as well as the existing treatment components (Tank-1113 and tray air strippers) to be retained in the overall treatment train, which includes:

1. Physical separation of oil and solids in a 200-gallon tank simulating to T-1113,
2. Air Stripper simulating the existing tray strippers,
3. Air and Coagulant injection upstream of Static Mixer,
4. Sand Filtration to remove floc,
5. Passive pH control using Calcite,
6. Chlorine Injection to oxidize chemicals and recharge Green Sand Filter,
7. Green Sand Filter to remove iron, manganese and hydrogen sulfide,
8. Sulfuric Acid injection, if needed to adjust pH, and
9. Filter Press to dewater filtrate collected during system backwash.

2.3.2 Preliminary Pilot Testing

In April 2018, a preliminary pilot plant test was conducted by PSI and TPECI to evaluate effluent quality and demonstrate proof-of-concept of the treatment system upgrade. During startup of the pilot test, TPECI determined that not all of contributing sumps had volumes of influent needed to fulfill the proposed test scenarios as originally planned. The new laboratory sump, that typically contributes high-strength influent concentrations of pollutants, had been pump out by PSVR staff. TPECI decided to conduct an abbreviated test of the proposed typical scenario of 2.1 % contribution (preliminary scenario 2 (PS2)) from all process water sumps test but used a synthesized source input intended to represent the laboratory sump. The purpose of conducting this preliminary test was to identify pollutants of concern (POCs), obtain an initial confirmation of design before conducting the full pilot test, and to evaluate the effluent with respect to applicable ground water quality criteria. To be explained in Section 3.1, the applicable ground water quality criteria is based on classification of the ground water as water supply per 18 AAC 70.050(2). Specifically, the criteria is the more stringent among the criteria for water supply for drinking water (D), irrigation (I), or stock watering (S). Some parameters are evaluated because they have operational implications and may be considered for monitoring for treatment breakthrough such as

semi-volatile organic compounds associated with total aqueous hydrocarbons (TAqH). Lastly, results that are below detection or do not contribute to operational considerations are not necessary to be evaluated and have been excluded from discussion. Table 4 provides three individual results (R1, R2, and R3) from the preliminary pilot testing on PS2 using synthesized source inputs for the new laboratory sump and compares the results to the most stringent ground water criteria.

Table 4: Preliminary Pilot Test Results for 2.1 % Process Wastewater

Parameter (Units)	PS2R1	PS2R2	PS2R3	Criteria (Class)
pH (Standard Units (su))	8	8.2	8.3	6.5 < pH < 8.5 (D)
Aluminum (micrograms per liter (μg/L))	86.7	43.4	50.9	5,000 (I)
Barium (μg/L)	33.5	31.2	33.7	2,000 (D)
Boron (μg/L)	223	236	219	750 (I)
Cadmium (μg/L)	0.927	1.9	1.71	5 (D)
Chromium (μg/L)	6.26	14.4	13.7	100 (D)
Copper (μg/L)	8.06	11.7	10	200 (I)
Iron (μg/L)	**9,690**	**15,700**	**15,200**	5,000 (I)
Lead (μg/L)	0.82	0.903	0.786	50 (S)
Manganese (μg/L)	**260**	180	122	200 (I)
Molybdenum (μg/L)	3.7	5.27	5.34	10 (I)
Nickel (μg/L)	15.2	17.5	16.2	200 (I)
Zinc (μg/L)	129	208	192	2,000 (I)
Nitrate/Nitrite (milligrams per liter (mg/L))	4.85	**10.5**	**10.1**	10 (D)
Cyanide (mg/L)	0.0066	0.012	0.013	200 (D)
Sulfate (mg/L)	13.4	17.7	18	250 (D)
COD (mg/L)	179	311	307	POC
BOD_5 (mg/L)	40.9	65.4	65.1	POC
TOC (mg/L)	57.4	101	105	POC
TSS (mg/L)	30.3	7.75	6	POC
Ammonia as N (mg/L)	10.3	14.1	15.7	POC
Total Phosphorus (mg/L)	0.929	1.42	1.84	POC
Fluorene (μg/L)	0.467	0.824	1.19	POC/TAqH
Naphthalene (μg/L)	1.52	2.42	2.45	POC/TAqH
Phenanthrene (μg/L)	0.302	0.713	1.29	POC/TAqH
Pyrene (μg/L)	0.049	0.0508	0.0759	POC/TAqH

Based on preliminary pilot test results for the typical scenario test, iron and nitrate exceeded the most stringent ground water criteria. Although shown as exceeding criteria, the concentration of 2,600 mg/L of manganese is considered a typographical error in the preliminary report. During the pilot test, TPECI also determined that the relative contribution of pollutants contained in the 2.1 % scenario exceeded the treatment capacity of the pilot test system due to iron fouling of the filters and elevated concentrations of four hydrocarbons. Four hydrocarbons associated with TAqH were present above detection suggesting the influent may have had excessive diesel that could not be completely removed in the pilot test, suggesting a limitation in the air stripping unit. Based on this preliminary information, TPECI decided to revise the pilot testing program to eliminate the contribution of process water the laboratory sump and others that have iron chelate, which proved to be incompatible with the proposed treatment system. Essentially, these results led to excluding the following sumps in future pilot tests:

1. The SRU sump contained elevated levels of dissolved iron (iron chelate) and sulfate that was determined to be the primary source of metals.
2. The Containment Pad Sump contained elevated levels of dissolved iron (iron chelate).
3. The New Laboratory Sump is not connected to the collection system and is to be pumped via vacuum truck and disposed of off-site.

2.3.3 Pilot Test Scenarios

Based on preliminary pilot test results and modification to the wastewater sources described in Section 2.2.1 and 2.2.2, TPECI formulated the following treatment scenarios in August 2018 based on percent mixture of process sump wastewater with contact storm water to evaluate the treatment system performance:

1. Base-Case Scenario (storm water only): Least-Concentrated scenario: Tank T-1113 water only (essentially untreated storm water without sump fluids);
2. Typical-Case Scenario: A 0.6% sump fluids concentration (by volume) within Tank T-1113;
3. Maximum Operational Worst-Case Scenario: An 3.4% sump fluid concentration assuming the lowest Tank T-1113 water level; and
4. Extreme-Case Scenario: A 10% sump fluid concentration, beyond projected maximum wastewater contaminant concentrations, to evaluate the maximum treatment capability.
5. Additional Test Scenario: A 20% sump fluid concentration, well beyond projected maximum wastewater contaminant concentrations, to attempt to "break" the treatment system.

2.3.4 Pilot Test Results

As discussed in 2.3.3, PSVR and TPECI used test fluid of varying strengths collected from active sumps located throughout the refinery in August 2018 to conduct three rounds each for five test scenarios from a base-case to an extreme-case scenario. The analysis of treated effluent included conventional pollutants, hydrocarbons, and metals. The results were compared to the most stringent groundwater criteria as applicable. Parameters that had results below detection limits and/or were significantly less than the most stringent groundwater quality criteria have been excluded from Table 5 that provides the range of results for the POCs identified.

Table 5: Results of Pilot Test Parameters of Concern

Parameter (Units)	Pollutant Concentration Range (Minimum – Maximum; Average)				
	S1	S2	S3	S4	S5
TSS (mg/L)	<0.97 – 2.14; 1.42	<0.97 – 1.63; 1.3	<0.98 – 1.15; 1.04	5.4 – 8.8; 7.27	4
TOC (mg/L)	8.72 – 8.38; 9.03	8.26 – 9.14; 8.71	8.08 – 8.33; 8.19	9.88 – 12; 10.9	11.2
COD (mg/L)	32.4 – 43.1; 40.6	38.6 – 51.4; 42.2	68.3 – 87.3; 77	34.7 – 41.5; 38.7	103
BOD_5 (mg/L)	2.91 – 5.12; 3.78	3.44 – 5.0; 4.2	3.46 – 4.35; 3.88	5.62 – 6.29; 6.03	7.83
Sulfate (mg/L)	8.32 – 9.62; 9.05	8.67 – 10.3; 10.0	10.6 – 11.7; 11	15.2 – 16.2; 15.7	19.2
Nitrate as N (mg/L)	<0.10 – 0.51; 0.24	<0.10 – 0.64; 0.28	<0.10 – 0.44; 0.21	<0.178 – 0.363; 0.24	0.692
Aluminum (mg/L)	31.0 – 185, 105.7	31.6 – 102; 59.5	26.1 – 29.3; 27.5	287 – 522; 425	849
Barium (mg/L)	4.06 – 5.96; 4.78	3.0 – 3.45; 3.15	<3	3.75 – 6.05; 4.57	3.19
Copper (mg/L)	1.62 – 1.97; 1.79	1.35 – 2.97; 2.17	1.16 – 1.41; 1.28	2.2 – 2.8; 2.56	5.26
Iron (mg/L)	<250 – 388; 296	<250	<250	981 – 1,390; 1,134	2280
Lead (mg/L)	<0.2	<0.2	<0.2	<0.2 – 0.238; 0.223	0.391
Manganese (mg/L)	71.9 – 138; 114	165 – 440; 285	33.9 – 307; 179	86.8 – 156; 119.6	197
Nickel (mg/L)	7.88 – 9.79; 8.98	8.48 – 8.96; 8.77	8.99 – 9.2; 9.1	10.1 – 11.2; 10.6	12.9
Zinc (mg/L)	<0.2	<10 – 13.9; 12.2	<10 – 16.6; 13.3	44.2 – 89.5; 73.9	177

None of the POCs with applicable groundwater criteria exceeded the criteria. Hence, based on the pilot test results the disposal to the subsurface is not anticipated to result in exceeding criteria at, or beyond, the boundary of the treatment works. The boundary of the treatments is defined by the Permit as the downgradient monitoring well farthest from the leach field but no farther than the property boundary.

2.3.5 Disposal System

Treated contact storm water effluent is currently disposed to the subsurface through an existing leach field located on the north side of the property. The leach field was installed in 2013 but was not approved by DEC prior to construction. To obtain approval to operate, TPECI submitted record drawings, percolation tests, and sizing criteria to DEC for review. DEC issued Approval to Operate on July 17, 2015. This review and approval was for just treatment and disposal of treated contact storm water using the existing air-stripper and before inclusion of process water and expansion of the treatment system. Hence, the leach field is being re-evaluated based on changed conditions while issuing the Permit.

During initial review and prior to pilot testing, TPECI and DEC had different perspectives on the appropriate infiltration capacity of the leach field. DEC had concerns that COD, BOD_5, and inorganic compounds in the effluent could reduce the initial infiltration capacity over time and potentially result in premature failure of the leach field. TPECI's perspective was that the effluent would be of high enough quality such that the leach field would function primarily as a subsurface disposal and retain the initial infiltration capacity rather being severely impacted by biological growth or precipitation of metals.

The leach field was constructed using gravel fill material and is currently 250 ft by 30 ft, an area of 7,500 sf. Groundwater measurements taken in close proximity to the leach field indicated the groundwater table is between 20 and 25 ft below ground surface, thus the vertical distance between the leach field fill material and the groundwater table is estimated between 10 to 15 ft. The native soil below the leach field is comprised of fine to coarse sands and gravel with traces of silt lenses. Percolation tests conducted in the area immediately adjacent to the leach field resulted in an average percolation rate of 2.91 minutes per inch. Based on sizing criteria for domestic wastewater, the applicable infiltration rate applied to the leach field would be 1.2 gpd/sf and result in a daily capacity of 9,000 gpd. However, as TPECI points out, the leach field is for disposal of treated storm water where it will function primarily as an infiltration gallery with limited additionally capacity reserved for treatment. Based on the average observed percolation rates, the maximum disposal rate could be as high as 2.2 million gallons per day (mgd). Meanwhile, the estimated disposal demand is approximately 19,000 gpd based on the water balance and effluent tank volumes. Ultimately, the leach field is approved with an understanding that during operation, monitoring of the leach field would indicate if degradation of infiltration capacity was occurring and allow for replacement before actual failure. The Permit will include monitoring requirements and other stipulations to allow for continuous use under the Permit.

In relation to neighboring waterbodies and water sources, the leach field is located 450 ft from Abercrombie Creek, 1,000 ft from the Lowe River and 5,000 ft from Port Valdez. A search on the DEC Contaminated Site Database indicates the closest contaminated site is approximately 1.5 miles away. The leach field is 675 ft from the nearest up gradient drinking water well (the furthest drinking water well is 990 ft) and 850 ft from the fire water well. Because fire well water is to be used in backwashing the treatment system, TPECI collected a fire tank sample to evaluate potential for cross-contaminating the effluent. This data also provides a preliminary estimate of the groundwater quality expected up gradient of the leach field. Table 6 provides estimated groundwater characteristics for those parameters that had detectable results.

Table 6: Groundwater Quality from Fire Well

Parameter (Units)	Fire Well	Criteria (Class)
pH (su)	7.8	6.5 < pH < 8.5 (D)
Total Dissolved Solids (μg/L)	139	500 (D)
Chloride (mg/L)	24.7	250 (D)
Sulfate (mg/L)	21.7	250 (D)
Copper (μg/L)	3.2	200 (I)
Iron (μg/L)	740	5,000 (I)
Manganese (μg/L)	29.9	200 (I)
Zinc (μg/L)	155	2,000 (I)
Hardness as Calcium Carbonate ($CaCO_3$) (mg/L)	38.9	---
Alkalinity as $CaCO_3$ (mg/L)-	54.4	---
Calcium (mg/L)	15.6	---
Magnesium (mg/L)	5.63	---

3.0 RECEIVING WATERBODY

3.1 Water Quality Standards

3.1.1 Surface Water (APDES)

For APDES permits (e.g., storm water), Section 301(b)(1)(C) of the CWA requires the development of limits in permits necessary to meet water quality standards by July 1, 1977. Per 18 AAC 83.435, APDES permits must include conditions to ensure compliance with 18 AAC 70 – Alaska Water Quality Standards (WQS). The WQS are composed of waterbody use classifications, numeric and/or narrative water quality criteria, and an Antidegradation Policy. The use classification system designates the beneficial uses that each waterbody is expected to achieve. The numeric and/or narrative water quality criteria are the criteria deemed necessary by the state to support the beneficial use classification of each waterbody. The Antidegradation Policy, applied to APDES Permits, ensures that the beneficial uses and existing water quality are maintained.

Waterbodies in Alaska are designated for all uses unless the water has been reclassified under 18 AAC 70.230 as listed under 18 AAC 70.230(e). Some waterbodies in Alaska can also have site–specific water quality criterion per 18 AAC 70.235, such as those listed under 18 AAC 70.236(b). The Department has determined that there has been no reclassification nor has site-specific water quality criteria been established for Abercrombie Creek at the location of the permitted discharge. Accordingly, site-specific criteria is not applicable.

3.1.2 Ground Water (State Permit)

For land disposals to groundwater, 18 AAC 70.010(b) states that except as specified in an authorization under 18 AAC 72, the water quality standards and limits established in WQS do not apply to treatment works authorized by the Department. However, the water quality criteria and limits set by or under WQS must be met at, and beyond, the boundary of the treatment works (i.e., subsurface disposal system). Hence, all applicable groundwater criteria must be met in the groundwater before leaving the refinery property boundary, or the farthest downgradient monitoring well where evaluation can occur. Applicable

groundwater criteria is established in 18 AAC 70.050(2) and specifies that groundwater in Alaska must be protected for the use classification "1A", which is water supply for drinking water, agriculture including irrigation, and stock watering, aquaculture, and industrial uses.

3.2 Water Quality Status of Receiving Water

3.2.1 Surface Water (APDES)

Any part of a waterbody for which the water quality does not, or is not expected to, intrinsically meet applicable WQS is defined as a "water quality limited segment" and placed on the state's impaired waterbody list. For an impaired waterbody, Section 303(d) of the CWA requires states to develop a Total Maximum Daily Load (TMDL) management plan for the waterbody. The TMDL documents the amount of a pollutant a waterbody can assimilate without violating WQS and allocates that load to known point sources and nonpoint sources.

Port Valdez, Lowe River, nor Abercrombie Creek are included as an impaired waterbody in the *Alaska's Final 2014/2016 Integrated Water Quality Monitoring and Assessment Report*, November 2, 2018 nor are they listed as a CWA 303(d) waterbodies requiring a TMDL. Accordingly, a TMDL has not been established for Port Valdez, Lowe River, or Abercrombie Creek.

3.2.2 Groundwater (State Permit)

Based on the results of the fire well water presumed to represent original groundwater quality, the groundwater meets the most stringent criteria among the applicable groundwater classes. In addition, review of the DEC Contaminated Sites Database indicates there are no known groundwater contamination sources impacting groundwater in the vicinity of the disposal (See Section 2.3.5).

4.0 EFFLUENT LIMITS AND MONITORING REQUIREMENTS

4.1 Basis for Effluent Limits

4.1.1 APDES Discharge Limits

Per 18 AAC 83.015, the Department prohibits the discharge of pollutants to waters of the U.S. unless the applicant has first obtained an APDES permit that meets the purposes of AS 46.03 and is in accordance with CWA Section 402. Per these statutory and regulatory provisions, the Permit includes effluent limits that require the discharger to meet standards reflecting levels of technological capability, comply with WQS, and comply with other state requirements that may be more stringent. The CWA requires that the limits for a particular pollutant be the more stringent of either technology-based effluent limits (TBELs) or water-quality based effluent limits (WQBELs).

Only the discharge of storm water is applicable to 18 AAC 83 in the Permit. There are no applicable TBELs for storm water; pollutants in storm water are controlled using source control as implemented in a Storm Water Pollution Prevention Plan (SWPPP). Per the definition for noncontact storm water, the discharge of storm water must meet all applicable water quality criteria. Hence, there are also no applicable WQBELs given adequate source control prevents exceeding water quality criteria.

4.1.2 Land Disposal Limits

Per AS 46.03.100(b), prior authorization is required before a person may dispose of waste material into the waters or onto the land of state. In the hybrid Permit, DEC is issuing a land disposal under 18 AAC 72.500(a), which states "the Department may require, as part of prior authorization under

AS 46.03.100(b), a permit under this chapter for a person who disposes of nondomestic waste into or onto (3) groundwater in this state." In accordance with AS 46.03.110(d), the Department may specify the terms and conditions for disposing wastewater into the groundwater of the state in a permit.

DEC used results from the pilot study to evaluate if limits on the effluent quality is necessary to ensure protection of the existing uses of the groundwater at, and beyond, the boundary of the treatment works. The treatment works includes the wastewater treatment system and the subsurface disposal system up to the boundary of the refinery property line, or the farthest downgradient monitoring well. Based on the results of the pilot study, no parameters appear to have the potential to exceed groundwater quality criteria prior to disposal in the leach field, or farther downgradient. Therefore, the Permit does not include limits based on meeting water quality criteria. However, limits are established to help ensure long-term operation of the treatment works. Operation limits are established for pH, COD, BOD_5, TSS, and oil and grease.

4.1.3 Land Disposal Monitoring

Monitoring is established in the Permit so the permittee can develop appropriate operation controls, adequately characterize the effluent over the term of the Permit, and assess potential impacts in the groundwater at the boundary of the treatment works should they occur. Specifically, DEC considered monitoring of certain parameters that will help ensure the treatment and disposal system is properly controlled and to safeguard against unanticipated failure (e.g., loss of leach field infiltration capacity). Although the pilot study provided meaningful data, the pilot test did not account for dynamic variability in the influent characteristics that the full-scale treatment system will encounter. Frontloaded monitoring of the effluent will be conducted on a shortened list of parameters with the frequency and list being reduced over time. Lastly, quarterly groundwater monitoring is initially required to establish a baseline for future comparison to evaluate long-term groundwater impacts and to demonstrate compliance with WQS. The possibility for reduced monitoring will depend on results.

The initial approach will focus on monitoring the effluent in batches prior to disposal to ensure the effluent quality is sufficient. The monitoring requirements in the Permit have a frontloaded frequency that will be reduced during the term of the Permit once effluent characterization provides proof of concept based on performance of the treatment system under variable influent loads and supports development of a long-term operation procedures. Once the permittee can demonstrate to DEC with reasonable confidence that the treatment system performs as intended and control parameters are solidified in operating procedures, the permittee may request transitioning to continuous operation relying more on online monitoring equipment, rather than batches verified by laboratory results. The transition to continuous operation may be coupled with a reduction of the number of parameters or frequency based on based performance.

4.2 Effluent Limits and Monitoring Requirements (State Permit)

4.2.1 General Batch Operation Effluent Limits and Monitoring Requirements for Disposal 001 – Treated CSW/PWW

During the General Batch Operation of the CSW/PWW Treatment and Disposal System the permittee must monitor each treated batch of effluent using a combination of inline instrumentation, in-house laboratory confirmation, and third-party (3rd Party) laboratory confirmation per Table 8 with the ultimate goal of eventually discharging continuously using primarily inline monitoring and in-house confirmation sampling at reduced frequency (See Table 9). The type of analysis (i.e., 3rd Party, in-house, or inline) used to characterize the effluent or for compliance with effluent limits must be clearly identified in the

current Standard Operating Procedure (SOP) (See Section 8.3.1). The General Batch Operation effluent limits and monitoring requirements for the Start-up Batch Operation of the CSW/PWW Treatment and Disposal System is provided in Table 7.

Table 7: Effluent Limitations for Treated CSW/PWW Disposal

Parameter (Units)	Effluent Limits [1]	
	MDL	AML
Monthly Total and Average Volume [2] (mgd)	Report	Report
pH (su)	6.5 < pH < 8.5	
Oil and Grease (mg/L)	10	5
COD (mg/L)	85	42.5
BOD_5 [3] (mg/L)	15	7.5
TSS [4] (mg/L)	20	10
TOC [3] (mg/L)	Report	
Turbidity [4] (Nephelometric Turbidity Unit (NTU))	Report	
Total Residual Chlorine (TRC) (mg/L)	Report	
Total Nitrate/Nitrite (mg/L)	Report	
Total Recoverable Metals [5] (µg/L)	Report	
Total Aromatic Hydrocarbons (TAH) (µg/L)	Report	
TAqH (µg/L)	Report	
Hexavalent Chromium [6] (µg/L)	Report	
Bromide [6] (mg/L)	Report	
Fluoride [6] (mg/L)	Report	
Sulfate [6] (mg/L)	Report	
Sulfide [6] (mg/L)	Report	
Sulfite [6] (mg/L)	Report	
Total Dissolved Phosphorus [6] (mg/L)	Report	
Alkalinity as $CaCO_3$ [6] (mg/L)	Report	

Notes:

1. The sample locations for effluent characterization and compliance with limits are on outlets of Tank T-1120 and T-1120B.
2. Flow volumes must be measured daily when disposals occur and recorded in a daily log. Report total monthly volumes and average monthly volumes determined by dividing the total monthly volume by the number of disposal events for the month.
3. Upon reasonably demonstrating a correlation between TOC with BOD_5, the permittee may submit a written request to DEC for Department approval to use inline TOC results in lieu of BOD_5 analysis for meeting the BOD_5 limits using the established correlation ratio.
4. Upon reasonably demonstrating a correlation between TSS with turbidity, the permittee may submit a written request to DEC for Department approval to use inline turbidity results in lieu of TSS analysis for meeting the TSS limits using the established correlation ratio.
5. At a minimum, the permittee must report the total recoverable metals Cadmium, Copper, Iron, Manganese, and Molybdenum.
6. The permittee may request discontinuance of these parameters once the treatment system is in Continuous Operation based on observed results demonstrating the inapplicability of the parameter for controlling the effluent quality.

Per notes 2 and 3 in Table 7, the use of correlation to inline monitoring results may be appropriate as the operation transitions to Continuous Operation. Hence, the limits will not change as compliance with the limits switches to the surrogate parameter and applying a correlation factor based on statistical significance of the data supporting adoption of the surrogates. Although the limits will not change between operating scenarios, the monitoring strategy may vary significantly per the following monitoring Table 8 and Table 9.

Table 8: General Batch Operation Monitoring Frequencies and Sample Types

Parameter	Sample Frequencies and Types		
	In-House Laboratory	**3rd-Party Laboratory**	**Type (Meter and/or Grab)**
pH [1]	1/Batch	---	Meter and Grab
Oil and Grease [1]	1/Batch	1/Batch	Meter and Grab
COD	1/Batch	1/Batch	Grab
BOD_5 [2]	---	1/Batch	Grab
TSS [3]	1/Batch	1/Batch	Grab
TOC [2]	1/Batch	1/Batch	Grab
Turbidity [1], [3]	1/Batch	1/Batch	Meter and Grab
TRC [1]	1/Batch	1/Batch	Meter and Grab
Total Nitrate/Nitrite	1/Batch	1/Batch	Grab
Metals'	---	1/Batch	Grab
TAH	---	1/Batch	Grab
TAqH	---	1/Batch	Grab
Hexavalent Chromium [4]	---	1/Batch	Grab
Bromide [4]	---	1/Batch	Grab
Fluoride [4]	---	1/Batch	Grab
Sulfate [4]	---	1/Batch	Grab
Sulfide [4]	---	1/Batch	Grab
Sulfite [4]	---	1/Batch	Grab
Total Dissolved Phosphorus [4]	---	1/Batch	Grab
Alkalinity as $CaCO_3$ [4]	---	1/Batch	Grab

Notes:

1. Parameter is metered In-line and compared to In-House Laboratory results and Third-party Laboratory results. During General Batch Operation, In-House and 3rd Party laboratory results are used for compliance with the larger result used in reporting unless use of In-line results are approved by DEC upon written request by the permittee.
2. To demonstrate a correlation between TOC with BOD_5, the permittee must obtain at least 20 paired data points to submit with a written request to DEC for Department approval to use inline TOC results in lieu of 3rd Party BOD_5 laboratory results. If inline TOC is approved, the 3rd Party laboratory frequency will become once per month rather than per batch.
3. To demonstrate a correlation between TSS with turbidity, the permittee must obtain at least 20 paired data points to submit with a written request to DEC for Department approval to use inline turbidity results in lieu of TSS In-house or 3rd Party laboratory results. If inline monitoring of turbidity is approved in lieu of TSS, the In-house frequency is once per month instead of batch and the 3rd Party sample can be eliminated.
4. Monitoring of these parameters per batch during the General Batch Operation of the CSW/PWW Treatment System remains in effective until the permittee submits a letter report per Section 4.2.3 demonstrating that the treatment performance and operation does not warrant further In-house or 3rd Party laboratory confirmation results prior to disposal. The permittee must obtain written approval from DEC to transitioning to Continuous Operation using inline monitoring to evaluate the effluent prior to disposal. In-house and 3rd Party laboratory analysis frequency and sample types are shown in Table 9 for Continuous Operation.

Table 9: Continuous Operation Monitoring Frequencies and Sample Types

Parameter	Sample Frequencies and Types		
	In-House Laboratory	3rd-Party Laboratory	Type (Meter and/or Grab)
pH [1]	3/Week	---	Meter and Grab
Oil and Grease [1]	3/Week	1/Month	Meter and Grab
COD	3/Week	1/Month	Grab
BOD_5 [2]	---	1/Month	Grab
TSS [3]	3/Week	1/Month	Grab
TOC [2]	3/Week	1/Month	Grab
Turbidity [1, 3]	3/Week	1/Month	Meter and Grab
TRC [1]	3/Week	1/Month	Meter and Grab
Total Nitrate/Nitrite	3/Week	1/Month	Grab
Metals'	---	1/Month	Grab
TAH	---	1/Month	Grab
TAqH	---	1/Month	Grab
Hexavalent Chromium [4]	---	1/Quarter	Grab
Bromide [4]	---	1/Quarter	Grab
Fluoride [4]	---	1/Quarter	Grab
Sulfate [4]	---	1/Quarter	Grab
Sulfide [4]	---	1/Quarter	Grab
Sulfite [4]	---	1/Quarter	Grab
Total Dissolved Phosphorus [4]	---	1/Quarter	Grab
Alkalinity as $CaCO_3$ [4]	---	1/Quarter	Grab

Notes:

1. Parameter is metered In-line and compared to In-House Laboratory results and Third-party Laboratory results. During Continuous Operation, In-House and 3rd Party laboratory results are used to validate the continued effectiveness of inline monitoring.
2. The Permittee may submit a written request to DEC for approval to use TOC inline monitoring and a correlation coefficient in lieu of BOD_5 (See Note 2 Table 8 and Section 4.2.3 Reporting).
3. The Permittee may submit a written request to DEC for approval to use inline turbidity monitoring and a correlation coefficient in lieu of BOD_5 (See Note 2 Table 8 and Section 4.2.3Reporting)..
4. Reduced monitoring frequencies or elimination of these parameters during the Continuous Operation of the CSW/PWW Treatment System will be determined and become effective upon the permittee obtaining written approval from DEC. See Note 4 in Table 8 for more information.

4.2.2 Best Management Practices for CSW/PWW Treatment and Disposal System

In order to help ensure compliance, proper operation, and avoidance of system failure DEC requires the following specific best management practices (BMPs) be incorporated into the BMP Plan in Section 8.3.

4.2.2.1 CSW/PWW Treatment System Operating Procedures

During the term of the Permit, operation of the CSW/PWW Treatment System will go through two operational transitions based on experience gained in operating the system and monitoring effluent quality. The permittee must develop a CSW/PWW Treatment System SOP for each mode of operation. At a minimum, the CSW/PWW Treatment System SOP must include operational control measures, maintenance, confirmation sampling procedures, treatment performance metrics that trigger reprocessing effluent, and DEC notification requirements. Prior to obtaining approval from DEC to transition to Continuous Operation, the permittee must develop and submit the SOP for DEC to review with the request. Note that the permittee does not need to submit an initial SOP for Start-up Batch Operation as this will be specified in an interim approval to operate issued by DEC separately from the

Permit. The permittee must develop the SOP for General Batch Operation during the interim start-up period and submit it within 30-days of the effective date of the Permit. See also Section 8.3.1. Subsequently, SOPs may be revised at any time based on new information. Revised SOPs must be submitted to DEC for written approval prior to implementation.

4.2.2.2 Off-specification Influent Control and Sump Segregation

In order to achieve adequate treatment of the CSW/PWW wastewater, PSVR intentionally excludes several sumps that can potentially have sources of iron or diesel that could overload the CSW/PWW Treatment System. The permittee must develop specific BMPs to prevent introducing off-specification wastewater into the treatment system. See also Section 8.3.2.

4.2.2.3 Glycol Detection and Control

Per Table 2, almost all contributing sumps to the CSW/PWW Treatment System have the potential to contain glycol associated with heat transfer systems. Glycol is known to impart a high BOD_5 and COD concentrations that the treatment system is not well equipped to treat. An undetected slug of glycol could be disposed to the leach field and cause increased biofilm and lead to decreased infiltration capacity. The permittee must establish specific BMPs that will help ensure detection of glycol in the effluent and corrective actions should it be discovered. The permittee must also consider how a long-term monitoring strategy can be implemented to quickly identify glycol during continuous treatment and disposal to safeguard the infiltration system and the groundwater See also Section 8.3.3.

4.2.2.4 Turn-around Waste Segregation and Disposal

Turn-around waste was not considered during the pilot testing and ultimate selection of the CSW/PWW Treatment System and is likely incompatible with effluent quality objectives. DEC understands that turn-around waste is generated annually and that the waste generated is planned to be containerized and shipped offsite for treatment and disposal. The permittee must develop a specific BMP to ensure turn-around waste is not unintentionally introduced into the collection system for the CSW/PWW treatment system. See also Section 8.3.4.

4.2.2.5 Secondary Containment Area Contaminated Storm Water Diversion

The Permit allows the treatment and disposal of contaminated SCA water through the CSW/PWW Treatment System and the discharge of uncontaminated SCA water as storm water. The Permittee must develop specific BMPs to address procedures to ensure contaminated SCA water is not mistakenly discharged to the storm water conveyance system. Because the storm water conveyance system is implicated, this BMP has a direct overlap with Section 5.2. See also Section 8.3.5.

4.2.3 Effluent Reporting Requirements

During General Batch Operation of the CSW/PWW Treatment and Disposal System the permittee must submit quarterly monitoring reports. These reports will consist of letter reports with inclusion of monthly disposal monitoring report forms provided by DEC for use by the permittee. The letter report must include observations of treatment performance, discussion of inline monitoring, in-house analytical reports, third-party analytical reports, and how correlations using inline monitoring may lead to surrogate parameters in lieu of analytical results for compliance under the Permit. Within these letter reports, the permittee may also request approval to transition from General Batch Operations to Continuous Operations. Once the permittee successfully transitions to Continuous Operations the reporting frequency will become annual with submissions to occur on January 31 following each calendar year of operation. The goal of front-loaded reporting requirements is to help ensure successful operation of the treatment system and reduce reporting burden once operational controls are established

and the system has demonstrated successful compliance. Ultimately, DEC envisions annual reports consisting of a cover letter with disposal monitoring reports as enclosures.

4.2.4 Groundwater Monitoring

The permit requires groundwater monitoring to ensure groundwater quality is not impact by the disposal and uses of the groundwater beyond the treatment works is protected. Groundwater water quality must be met at and beyond the boundary of the treatment works, taken as the farthest downgradient monitoring well from the leach field up to property boundary. Notification levels are established to provide early identification of parameters with potential to exceed criteria or an operational limit that is imposed to protect the longevity of the disposal field or an indication of elevated natural groundwater conditions exist as determined by analysis of the upgradient monitoring well. Notification levels are provided based on approximately 50 percent of the applicable CSW/PWW Treatment System AML or most stringent water quality criteria based on groundwater use classifications. Upon receipt of final analytical results for each sample event, the permittee must notify DEC if any of the results exceed the notification levels in Table 10. Exceeding a notification level is not considered a permit violation. Furthermore, if an upgradient monitoring well is observed to exceed applicable groundwater criterion for a parameter, exceedance of the criterion for that parameter at the furthest most downstream monitoring well does not constitute a violation of water quality standards.:

During the term of the Permit, the permittee must monitor groundwater in each of the four monitoring wells installed in July 2019 to evaluate impacts of the effluent from the Contact Storm Water/Process Wastewater Treatment on the Disposal System and groundwater quality. A Sampling and Analysis Plan must be developed per standard industry procedures (e.g., *DEC Field Sampling Guidance, August 2017*) and implemented by field personnel and be kept onsite and made available to DEC upon request.

During the first year of operating the CSW/PWW Treatment and Disposal System, the permittee must conduct quarterly monitoring at each of the four installed monitoring wells. After the first year of operation, the permittee may request modifications to the monitoring frequency, parameter list, and other considerations as appropriate. DEC must approve proposed modifications in writing prior to the permittee implementing them during the next groundwater monitoring event.

The permittee must submit a letter report to DEC within 60 days of the last sample event for each year summarizing the analytical results including baseline lithology determined during well installation and water quality from initial samples, figures depicting seasonal flow directions, discussion of observed impacts to the groundwater, if any, resulting from disposal of treated effluent. If notification levels were exceeded during the period reflected by the annual report, the permittee must address why the notification level was exceeded and what precautions are being implemented to help ensure compliance with the Permit. In the report, the permittee may propose modifications to the groundwater monitoring, including but not limited to, reducing the list of analytes and/or frequency to annual monitoring. Reports and to be submitted per Section 1.4.1. The permittee must conduct groundwater monitoring as described in Table 10.

Table 10: Groundwater Monitoring Requirements

Parameter (Units)	Notification Level	First Year Frequency	Normal Frequency
Elevations and Direction (feet and vector) [1, 2]	---	1/Quarter	1/Year
pH [2] (su)	---	1/Quarter	1/Year
Alkalinity as $CaCO_3$ [3] (mg/L)	---	1/Quarter	1/Year
Oil and Grease [2] (mg/L)	2.5	1/Quarter	1/Year
COD [2] (mg/L)	20	1/Quarter	1/Year
BOD_5 [3] (mg/L)	5	1/Quarter	1/Year
TOC [2] (mg/L)	---	1/Quarter	1/Year
Total Nitrate/Nitrite [2] (mg/L)	5	1/Quarter	1/Year
Iron [2, 4] (µg/L)	2,500	1/Quarter	1/Year
Manganese [2, 4] (µg/L)	100	1/Quarter	1/Year
Cadmium [2, 4] (µg/L)	2.5	1/Quarter	1/Year
Copper [3, 4] (µg/L)	---	1/Quarter	1/Year
Molybdenum [2, 4] (µg/L)	5	1/Quarter	1/Year
TAH [2] (µg/L)	5 [5]	1/Quarter	1/Year
TAqH [2] (µg/L)	7.5	1/Quarter	1/Year
Hexavalent Chromium [2] (µg/L)	25	1/Quarter	1/Year
Chloride [3] (mg/L)	125	1/Quarter	1/Year
Sulfate [2] (mg/L)	125	1/Quarter	1/Year
Total Dissolved Phosphorus [3] (mg/L)	---	1/Quarter	1/Year
Total Dissolved Solids (TDS) [2, 3] (mg/L)	250	1/Quarter	1/Year

Notes:

1. .Groundwater elevations must be reported for each sample event and include a figure showing groundwater flow directions.
2. This parameter must be measured in each monitoring well for each sampling event.
3. If after the first year of quarterly monitoring this parameter is not observed to vary significantly from upgradient concentrations and the observed concentrations do not exceed the most stringent groundwater criteria, the permittee may request elimination, or reduction in frequency, of the parameter from ongoing monitoring for the remainder of the permit term per See Section 2.3.3.
4. Metals are to be reported as total recoverable metals.
5. The notification level for benzene is 2.5 µg/L.

4.2.5 Leach Field Slug Flow Testing

During the second and fourth year of the permit term, the permittee must conduct slug flow tests on the leach field to evaluate whether there is a noticeable loss of infiltration capacity. The first slug flow test may be used to establish a baseline for future comparisons. DEC does not stipulate specifically how to conduct the flow testing and leaves most of the means and methods to the permittee. However, the flow test must use slugs of water equivalent to 1.5 times the design absorption rate of 19,000 gallons, or 27,500 gallons. Monitoring the rising/falling rate of water in the monitoring tubes must be conducted over a period of time as necessary to estimate the absorption rate of the leach field (i.e., establishing baseline conditions). DEC recommends referring to procedures described in "*In-situ Testing of On-site Sewer Systems*," 33rd Alaska Science Conference, Fairbanks, Alaska, September 16-18, 1982. Other methods may be used as coordinated with DEC. The means and methods used, as well as the results, must be described in annual reports for groundwater monitoring for the years the flow tests are required.

5.0 STORM WATER REQUIREMENTS (APDES)

While contaminated storm water is covered under the Permit for land disposal, uncontaminated storm water is not as this has been covered through authorization AKR06AA59 under APDES General Permit AKR060000 - Multi-Sector General Permit for Storm Water Discharges Associated with Industrial Activities (MSGP). The refinery operates under the Standard Industrial Code 2911 - Petroleum Refining which corresponds to Sector C under the MSGP. The Permit includes APDES coverage for uncontaminated (noncontract) storm water and allowable non-storm water discharges consistent with the MSGP and requires development of a SWPPP. The SWPPP must identify control measures and BMPs that best suit the refinery and activities to meet pollution control objectives for noncontact storm water. The SWPPP is a tool to help prevent contaminated runoff from entering uncontaminated storm water conveyances (See Section 4.2.2.5 and Section 8.3.5).

5.1 SWPPP Development and Implementation

The SWPPP must be developed by a qualified person and the permittee must modify the existing SWPPP and implement the modifications. Within 90 days of the effective date of the Permit, the permittee must submit a written certification to DEC that the SWPPP has been modified and implemented. The SWPPP must be updated as necessary to reflect any new permit conditions (i.e., contaminated SCA water) or changes to the facility that affect the storm water controls implemented at the site (Section 5.5) including revisions that address applicable federal, state, tribal, or local requirements. The adaptation of the SWPPP for facility changes resulting from other program requirements is intended to account for overlapping or similar requirements, while complying with the Permit. The permittee must review the SWPPP annually, make revisions if necessary, and submit annual certifications to the Department. The SWPPP must be maintained at the facility per Section 5.3.

5.2 SWPPP Contents

A SWPPP shall be consistent with EPAs document, *Developing Your Stormwater Pollution Prevention Plan – A Guide for Industrial Operators* (February 2009, EPA 833-B-09-002) or any subsequent revision of the guidance document. For additional guidance, permittees may also consult the Alaska Storm Water Guide (December 2011) or the 2015 MSGP. The narrative of the SWPPP should include descriptions of the following items:

- Measures to cleanup reportable quantity releases (Contaminated storm water is storm water associated with a discharge of a reportable quantity for which notification is or was required per 40 CFR 117.21, 40 CFR 302.6, or 40 CFR 110.6 or any storm water that contributes to a violation of a water quality standard [40 CFR 122.26(c)(1)(iii)]);
- Vehicle and equipment storage, cleaning, and maintenance areas;
- Snow handling procedures and erosion controls; and
- Any provisions necessary to meet the BMP Plan requirements of the Permit (i.e., SCA diversions per Section 4.2.2.5.).

5.3 SWPPP Documentation and Availability

Copies of the Permit and a log of SWPPP modifications must be included with the SWPPP. The Permit condition stresses the importance understanding interrelated permit requirements and responsibilities. In addition, the following documents must be kept with the SWPPP:

- Description, location, and sequence of activities, control measures, and stabilization measures;

- Documentation of maintenance and repairs of control measures, including date(s) of regular maintenance, date(s) of discovery of areas in need of repair/maintenance, and date(s) that the control measure(s) returned to full function;
- Manufacture Information (i.e. Safety Data Sheet, manufacturer and/or supplier test results, or installation instructions);
- Description of any corrective action taken at the facility, including the event that caused the need for corrective action and dates when problems were discovered and modifications occurred;
- Records of employee training, including the date(s) training was received; and
- Copies of biannual inspection reports, non-compliance notices, annual SWPPP certifications, monitoring reports, and annual reports.

A Permittee must make a copy of the SWPPP and documentation available to DEC upon request for review or copying during any on-site inspection per 18 AAC 83.405(j)(2). Electronic storage of documents can be used so long as they are accessible when a DEC inspector conducts an onsite inspection. A copy of the SWPPP must be kept at the facility at all times. The SWPPP must identify any alternative off-site location for available access if there is a seasonal shut down for a facility. The SWPPP must be returned to the facility once the shutdown is over.

5.4 Inspection Requirements

Requirements for reporting results of storm water monitoring inspections are specified at 40 CFR 122.44(i)(4). Specifically the Permit requires:

- Bi-annual inspection of the facility site. One inspection should be conducted prior to breakup to assess whether there are any areas which may contribute to storm water discharges associated with the industrial facility or activity and could be addressed with BMPs to minimize contact with contamination sources. The second inspection should be conducted after the breakup period is over to assess whether there are any areas which contributed to storm water discharge associated with the industrial facility or activity that were unanticipated and unaddressed by the SWPPP. Based on findings during the inspections, the SWPPP should be modified to include the necessary practices to minimize future contact or contamination.
- Inspection reports and compliance certification must be maintained for a period of three years.
- Certifications that the bi-annual inspections have been conducted must be reported to the Department with other annual reporting requirements (Section 7.6). Certifications must be signed in accordance with established signatory authority (40 CFR 122.22).

5.5 SWPPP Modifications

The permittee must update the SWPPP, site maps, within seven calendar days in response to any following triggering conditions:

- Changes to control measures, good housekeeping measures, or other activities that render the exiting SWPPP obsolete,
- Changes made in response to corrective actions, or maintenance procedures, or
- An inspection or investigation reveal changes are necessary to comply with the Permit.

The permittee must revise its SWPPP to reflect the new maintenance procedures and include documentation of the corrective action to return to full compliance. The permittee must maintain a log showing the dates of all SWPPP modifications, including name of the person authorizing each change and a brief summary

6.0 ANTIBACKSLIDING (APDES)

Per 18 AAC 83.480, "effluent limitations, standards, or conditions must be at least as stringent as the final effluent limitations, standards, or conditions in the 2012 Permit." Per 18 AAC 83.480, a permit may not be reissued "to contain an effluent limitation that is less stringent than required by effluent guidelines in effect at the time the Permit is renewed or reissued."

Effluent limitations may be relaxed as allowed under 18 AAC 83.480(b), CWA Section 402(o) and CWA Section 303(d)(4). 18 AAC 83.480(b) allows relaxed limitations in renewed, reissued, or modified permits when there have been material and substantial alterations or additions to the permitted facility that justify the relaxation, or, if the Department determines that technical mistakes were made.

CWA Section 303(d)(4)(A) states that, for waterbodies where the water quality does not meet applicable WQS, effluent limitations may be revised under two conditions, the revised effluent limitation must ensure the attainment of the WQS (based on the waterbody TMDL or the waste load allocation) or the designated use which is not being attained is removed in accordance with the WQS regulations.

CWA Section 303(d)(4)(B) states that, for waterbodies where the water quality meets or exceeds the level necessary to support the waterbody's designated uses, WQBELs may be revised as long as the revision is consistent with the State's Antidegradation Policy. Even if the requirements of CWA Section 303(d)(4) or 18 AAC 83.480(b) are satisfied, 18 AAC 83.480(c) prohibits relaxed limits that would result in violations of WQS or effluent limitation guidelines (ELGs) (if applicable).

State regulation 18 AAC 83.480(b) only applies to effluent limitations established on the basis of CWA Section 402(a)(1)(B), and modification of such limitations based on effluent guidelines that were issued under CWA Section 304(b). Accordingly, 18 AAC 83.480(b) applies to the relaxation of previously established case-by-case TBELs developed using best professional judgement (BPJ). To determine if backsliding is allowable, the regulation provides five regulatory criteria in 18 AAC 83.480(b)(1-5) that must be evaluated and satisfied.

This is the first issuance of an individual permit that covers facility storm water. Previously, storm water at the facility has been covered by authorization AKR06AA59 under the MSGP. Because the requirements in the Permit have been developed to be consistent with the MSGP, there are no antibackslinding conditions in the Permit.

7.0 ANTIDEGRADATION (APDES)

7.1 Legal Basis

Antidegradation is implicit in CWA Section 101(a) goals, explicitly referenced in CWA Section 303(d)(4)(B), and implemented through 40 CFR 131.12. Section 303(d)(4) of the CWA states that, for waterbodies where the water quality meets or exceeds the level necessary to support the waterbody's designated uses, WQBELs may be revised as long as the revision is consistent with the State's Antidegradation Policy and implementation methods. Alaska's current Antidegradation Policy and implementation methods are presented in 18 AAC 70.015 *Antidegradation Policy* (Policy) and in 18 AAC 70.016 *Antidegradation implementation methods for discharges authorized under the federal Clean Water Act* (implementation methods). For these state regulations to apply under the CWA, they must be previously approved by EPA per CWA Section 303(c)(3). The policy and implementation

methods have been amended through April 6, 2018; are consistent with the CWA and 40 CFR 131.12; and were approved by EPA on July 26, 2018.

The following subsections document the Department's conformance with the policy and implementation methods for reissuance of the storm water discharge in the Permit under the authority APDES Program.

7.2 Receiving Water Status and Tier Determination

Per the implementation methods, the Department determines a Tier 1 or Tier 2 classification and protection level on a parameter by parameter basis. The implementation methods also describe a Tier 3 protection level applying to designated waters, although at this time no Tier 3 waters have been designated in Alaska.

The marine waters of Port Valdez, Lowe River, or Abercrombie Creek covered under the Permit, are not listed as impaired (Categories 4 or 5) in the *Alaska's Final 2014/2016 Integrated Water Quality Monitoring and Assessment Report*. Therefore, no parameters have been identified where only the Tier 1 protection level applies. Accordingly, this antidegradation analysis conservatively assumes that the Tier 2 protection level applies to all parameters, consistent with 18 AAC 70.016(c)(1).

Per 18 AAC 70.015(a)(2), if the quality of water exceeds levels necessary to support propagation of fish, shellfish, wildlife, and recreation in and on the water, that quality must be maintained and protected, unless the Department authorizes a reduction in water quality.

Prior to authorizing a reduction of water quality, the Department must first analyze and confirm the findings under 18 AAC 70.015(a)(2)(A-D) are met. The analysis must be conducted with implementation procedures in 18 AAC 70.016(b)(5)(A-C) for Tier 1 protection, and under 18 AAC 70.016(c)(7)(A-F) for Tier 2 protection. These analyses and associated finding are summarized below.

7.3 Tier 1 Analysis of Existing Use Protection

The summary below presents the Department's analyses and findings for the Tier 1 analysis of existing use protections per 18 AAC 70.016(b)(5) finding that:

> ***(A) existing uses and the water quality necessary for protection of existing uses have been identified based on available evidence, including water quality and use related data, information submitted by the applicant, and water quality and use related data and information received during public comment;***
>
> The Department reviewed water quality data, environmental monitoring studies, and information on existing uses in the vicinity of the storm water discharges submitted by the applicant. The Department finds the information reviewed as sufficient to identify existing uses and water quality necessary for Tier 1 protection.
>
> ***(B) existing uses will be maintained and protected****;*
>
> Per 18 AAC 70.020 and 18 AAC 70.050, marine waters are protected for all uses. Therefore, the most stringent water quality criteria found in 18 AAC 70.020 and in the *Alaska Water Quality Criteria Manual for Toxic and Other Deleterious Organic and Inorganic Substances* (DEC 2008) apply. The most stringent criteria were used when evaluating the disposals and discharges and none of the criteria were exceeded. Because criteria is developed for the purpose of protecting the uses of the waterbody and none of the criteria is being exceeded by storm water discharges, all of the uses of the waterbodies are fully maintained and protected.

(C) the discharge will not cause water quality to be lowered further where the department finds that the parameter already exceeds applicable criteria in 18 AAC 70.020(b), 18 AAC 70.030, or 18 AAC 70.236(b).

The Permit will require that the discharge shall not cause or contribute to a violation of WQS. As previously stated the waterbodies covered under this Permit are not listed as impaired. Therefore, no parameters were identified as already exceeding the applicable criteria in 18 AAC 70.020(b) or 18 AAC 70.030.

The Department concludes the terms and conditions of the Permit will be adequate to fully protect and maintain the existing uses of the water and that the findings required under 18 AAC 70.016(b)(5) are met.

7.4 Tier 2 Analysis for Lowering Water Quality Not Exceeding Applicable Criteria

7.4.1 Scope of Tier 2 Analysis

Per 18 AAC 70.016(c)(2), an antidegradation analysis is only required for those waterbodies needing Tier 2 protection and which have any new or existing discharges that are being expanded based on permitted increases in loading, concentration, or other changes in effluent characteristics that could result in comparative lower water quality or pose new adverse environmental impacts. Additionally, per 18 AAC 70.016(c)(3), DEC is not required to conduct an antidegradation analysis for a discharge the applicant is not proposing to expand.

Given this Fact Sheet is the basis for reissuing a storm water discharges, DEC reviewed the information provided by the applicant to determine if the discharge of storm water requires a Tier 2 evaluation. The review indicates the information provided is sufficient and credible per 18 AAC 70.016(c)(4) and the discharge of storm water cannot represent a new or expanded conditions because, by definition, storm water must meet water quality criteria. Accordingly, a Tier 2 Analysis is not required for the Permit.

8.0 OTHER PERMIT CONDITIONS

8.1 Standard Conditions (APDES)

Appendix A of the Permit contains standard regulatory language that must be included in all APDES permits. These requirements are based on the regulations and cannot be challenged in the context of an individual APDES permit action. The standard regulatory language covers requirements such as monitoring, recording, reporting requirements, compliance responsibilities, and other general requirements.

8.2 Quality Assurance Project Plan (APDES and State Permit)

The permittee is required to develop and implement a facility-specific Quality Assurance Project Plan (QAPP) that ensures all monitoring data associated with the Permit are accurate and to explain data anomalies if they occur. The permittee is required to develop and implement procedures in a QAPP that documents standard operating procedures the permittee must follow for collecting (e.g., EPA Method 1669 or similar industry standard), handling, storing and shipping samples; laboratory analysis (e.g., most sensitive methods); data reporting, and measures taken in the event a hold time is exceeded due to circumstances beyond the control of PSI. If a QAPP has already been developed and implemented, the permittee must review and revise the existing QAPP to ensure it includes the necessary content. The

permittee must submit a letter to the Department within 90 days of the effective date of the Permit certifying that the QAPP has been revised and implemented. The QAPP shall be retained onsite and made available to the Department upon request.

8.3 Best Management Practices Plan (APDES and State Permit)

A Best Management Practices Plan (BMP plan) presents operating and housekeeping measures intended to minimize or prevent the generation and potential release of pollutants from a facility to the waters of the U.S. during normal operations and additional activities. Per 18 AAC 83.475(4), "A permit must include best management practices to control or abate the discharge/disposal of pollutants and hazardous in a permit when the practices are reasonably necessary to achieve effluent limitations and standards…"

Within 90 days of the effective date of the Permit, the permittee must review, revise as necessary, implement the BMP Plan to address current activities at the terminal and submit written certification of the review, revision and implementation to DEC.

In each subsequent year of the Permit, the permittee must establish a committee to review and revise the BMP Plan as necessary to address any modifications or changes to operational practices at the terminal and to continue to meet the objectives and specific requirements of the Permit. The permittee must submit written certification to DEC that the BMP Plan review committee has reviewed the BMP Plan, and modified if necessary, by January 31st of each year the Permit remains in effect.

8.3.1 CSW/PWW Treatment System Operating Procedures

The permittee must develop operating procedures for different modes of operation of the CSW/PWW Treatment and Disposal System per Section 4.2.2.1.

8.3.2 Off-specification Sump Segregation

For sumps that are to be exclude from the CSW/PWW Treatment and Disposal System, the permittee must develop specific BMPs to ensure off-specification wastewater does not enter the system per Section 4.2.2.2.

8.3.3 Glycol Detection and Control

Most sumps intended to be included in the CSW/PWW Treatment and Disposal System have potential to contain glycol, which could pass through treatment and adversely impact the disposal system. The permittee must develop and implement specific BMPs for monitoring procedures for detection and contingency planning to help prevent impacts associated with glycol in the effluent per Section 4.2.2.3.

8.3.4 Turn-around Waste Segregation and Disposal

Turn-around waste is not appropriate for treatment and disposal at the refinery. The permittee must develop specific BMPs to ensure that turn-around waste is not unintentionally introduced into the collection system for the CSW/PWW Treatment System per Section 4.2.2.4.

8.3.5 Secondary Containment Area Contaminated Storm Water Diversion

The Permit allows the treatment and disposal of contaminated SCA water through the CSW/PWW Treatment System and the discharge of uncontaminated SCA water as storm water. The Permittee must develop specific BMPs to address procedures to ensure contaminated SCA water is not mistakenly discharged to the storm water conveyance system per Section 4.2.2.5. Because the storm water conveyance system is implicated, this BMP has a direct overlap with Section 5.2

9.0 OTHER LEGAL REQUIREMENTS (APDES)

9.1 Endangered Species Act

Per Section 7 of the Endangered Species Act (ESA), federal agencies are required to consult with the National Oceanic and Atmospheric Administration (NOAA), the National Marine Fisheries Service (NMFS) and the U.S. Fish and Wildlife Service (FWS) if their actions could beneficially or adversely affect any threatened or endangered species. As a state agency, DEC is not required to consult under Section 7 regarding wastewater discharge permitting actions. However, this does not absolve DEC from complying with Section 9 and 10 of the ESA. DEC consulted the NOAA Marine Mammal Species Range and Critical Habitat Interactive map located online at https://www.fisheries.noaa.gov/alaska/consultations/section-7-consultations-alaska and accessed the ESA Species interactive map to identify ESA species of concern in the waters adjacent to the facility. DEC also accessed the FWS Information, Planning, and Conservation System website at https://ecos.fws.gov/ipac/location to determine that the Steller Sea Lion, Fin Whale, and Humpback Whale may occur in the area. DEC sent an email to NOAA and FWS for confirmation on September 4, 2019.

9.2 Essential Fish Habitat

Essential fish habitat (EFH) includes waters and substrate (sediments, etc.) necessary for fish from commercially-fished species to spawn, breed, feed, or grow to maturity. The Magnuson-Stevens Fishery Conservation and Management Act (January 21, 1999) requires federal agencies to consult with NOAA when a proposed discharge has the potential to adversely affect (reduce quality and/or quantity of) EFH. As a State agency, DEC is not required to consult with these federal agencies regarding EFH; however DEC accessed EFH information at NOAA's Habitat Conservation Interactive EFH Mapper located at: https://www.fisheries.noaa.gov/resource/map/alaska-essential-fish-habitat-efh-mapper, in which the tool identified the following EFH species in the Port of Valdez: Salmon (pink, chum, sockeye, chinook, and coho). In addition, a number of species of sole, flounder, rock and pollock fish are found to spawn and mature in the Gulf of Alaska, which includes the Port of Valdez.

9.3 Ocean Discharge Criteria Evaluation

CWA Section 403(a), Ocean Discharge Criteria, prohibits the issuance of a permit under CWA Section 402 for a discharge into the territorial sea, the water of the contiguous zone, or the oceans except in compliance with Section 403. Permits for discharges seaward of the baseline on the territorial seas must comply with the requirements of Section 403, which include development of an Ocean Discharge Criteria Evaluation (ODCE).

The Permit requires compliance with Alaska WQS. Consistent with 40 CFR 125.122(b), adopted by reference at 18 AAC 83.010(C)(8), discharges in compliance with Alaska WQS shall be presumed not to cause unreasonable degradation of the marine environment. EPA made the connection between the similar protections provided by ODCE requirements and WQS when promulgating ocean discharge criteria rules in 1980, as stated, "the similarity between the objectives and requirements of [state WQS] and those of CWA Section 403 warrants a presumption that discharges in compliance with these [standards] also satisfy CWA Section 403." (Ocean Discharge Criteria, 45 Federal Register 65943.). As such, given the Permit requires compliance with Alaska WQS, unreasonable degradation to the marine environment is not expected and further analysis under 40 CFR 125.122 is not warranted for this permitting action.

9.4 Permit Expiration

The Permit will expire five years from the effective date of the Permit.

10.0 References

1. Alaska Department of Environmental Conservation, 2003. *Alaska Water Quality Criteria Manual for Toxics and Other Deleterious Organic and Inorganic Substances*, as amended through December 12, 2008.
2. Alaska Department of Environmental Conservation. *Alaska's Final 2014/2016 Integrated Water Quality Monitoring and Assessment Report*.
3. Alaska Department of Environmental Conservation. *Field Sampling Guidance*, August 2017.
4. Alaska Department of Environmental Conservation. *18 ACC 70. Water Quality Standards*, as amended through March 23, 2006.
5. Alaska Department of Environmental Conservation. *18 ACC 70. Water Quality Standards*, as amended through April 6, 2018.
6. Alaska Department of Environmental Conservation. *18 AAC 83. Alaska Pollutant Discharge Elimination System Program*. As amended Through October 23, 2008.
7. Alaska Department of Environmental Conservation. 18 ACC 72. Wastewater Disposal, as amended through December 23, 2009.
8. Travis/Peterson Environmental Consulting, Inc., "Petro Star Valdez Refinery Wastewater Treatment System Pilot Plant Operation and Findings." May 16, 2018.
9. Travis/Peterson Environmental Consulting, Inc., "Petro Star Valdez Refinery Phase II Process Wastewater and Storm Water Treatment System Pilot Plant Results Report." October 2018.
10. Petro Star Inc., "Petro Star Valdez Refinery Wastewater Treatment System Permit Application Report." April 2019.
11. U.S. EPA, *Technical Support Document for Water Quality-based Toxics Control*. Office of Water, EPA/505/2-90-001, PB91-127415. Washington D.C., March 1991.
12. U.S. EPA, *Interim Guidance for Performance-Based Reduction of NPDES Monitoring Frequencies*. Office of Water, EPA 833-B-96-001, Washington D.C., April 1998.
13. Institute of Marine Science, College of Fisheries and Ocean Sciences, University of Alaska Fairbanks, *Environmental Studies in Port Valdez, Alaska: 2017, (Final Report to Alyeska Pipeline Service Company),* Fairbanks, Alaska July 2018

APPENDIX A. FIGURES

Figure 1: Location Map – Valdez Refinery

Figure 2: Valdez Refinery Site Map

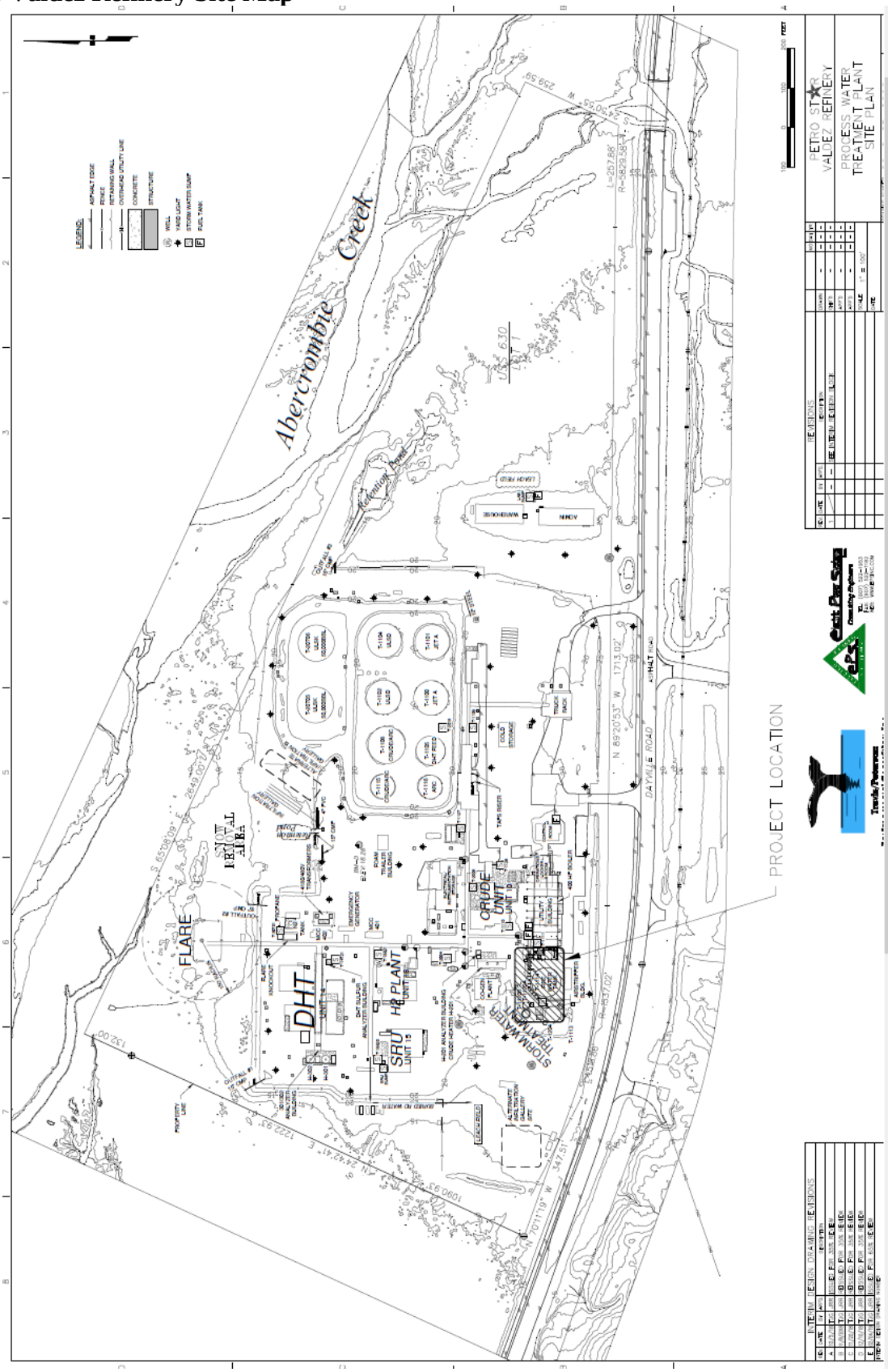

Figure 3: CSW/PWW Treatment System Process Flow Diagram

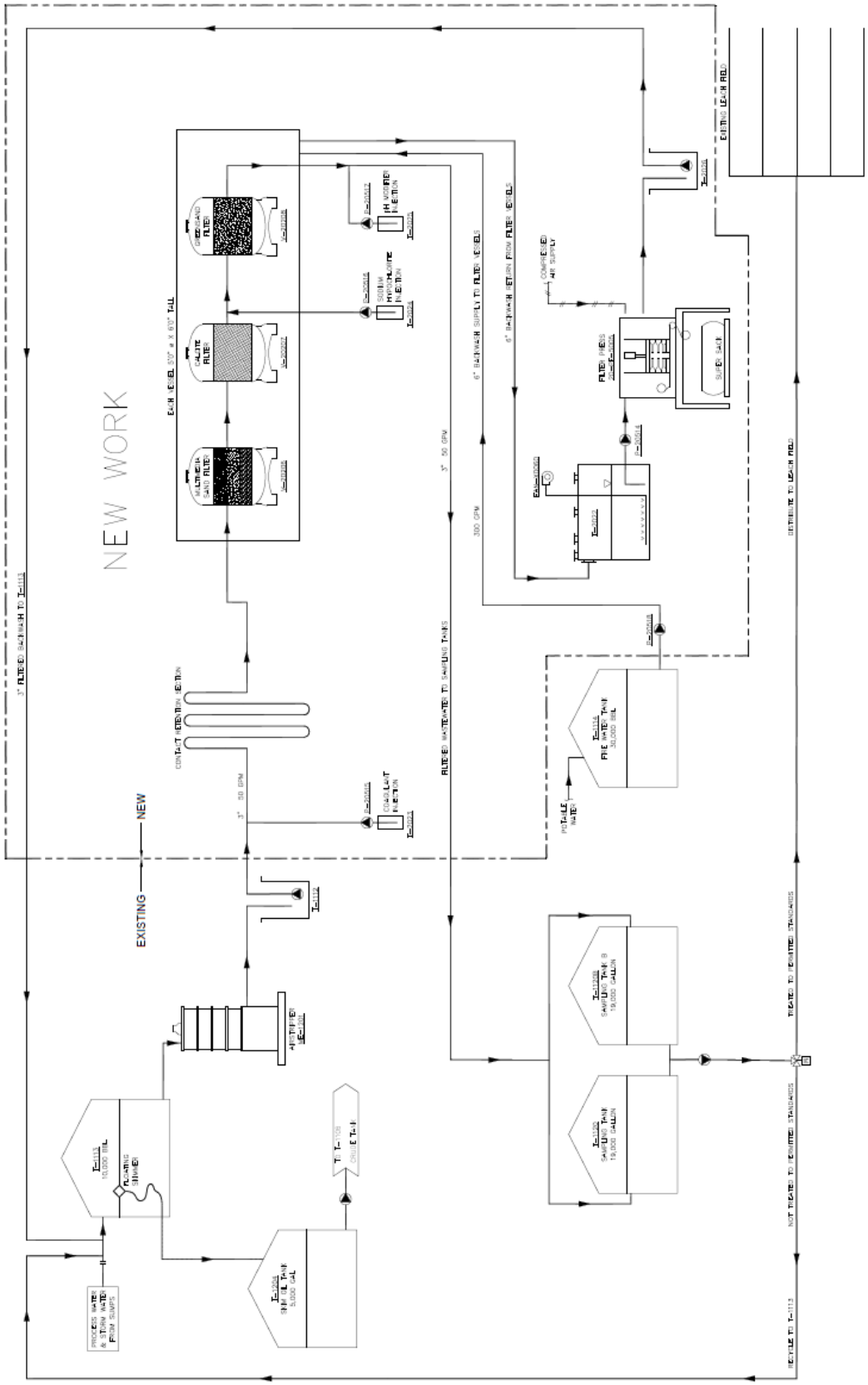

Figure 4: CSW/PWW Treatment System Piping and Instrumentation Diagram

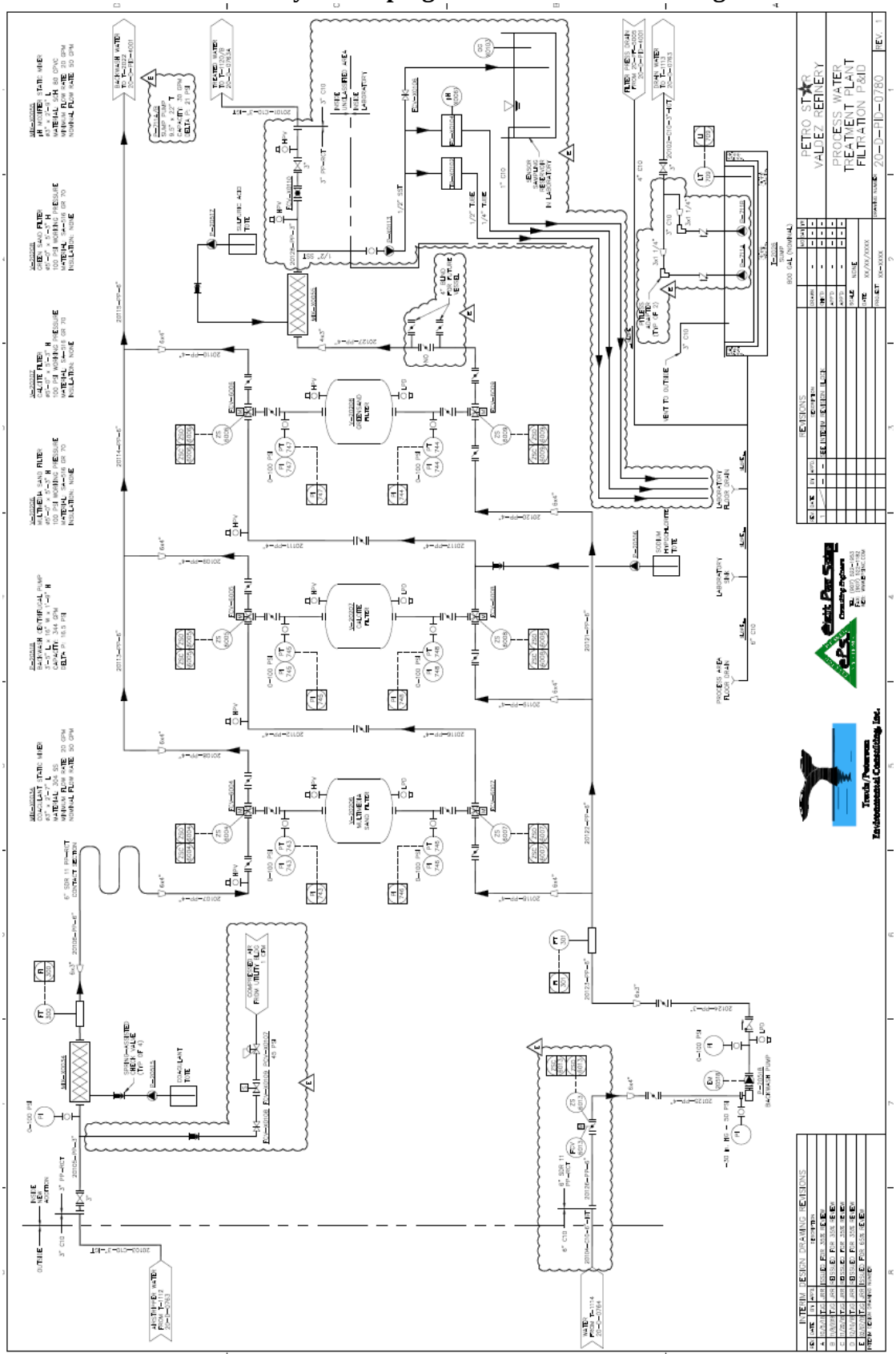

Figure 5: Existing CSW Treatment System Piping and Instrumentation Diagram

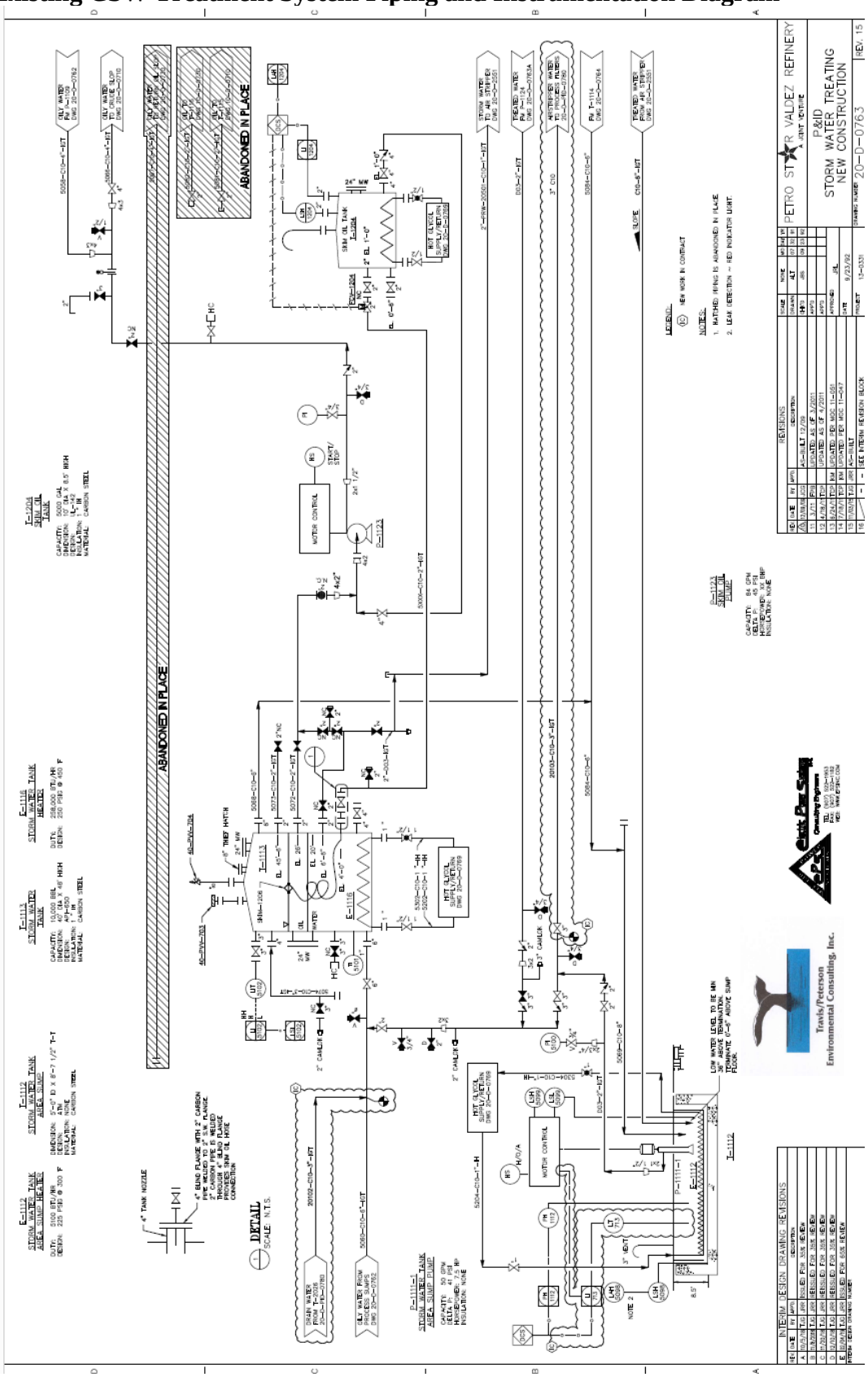
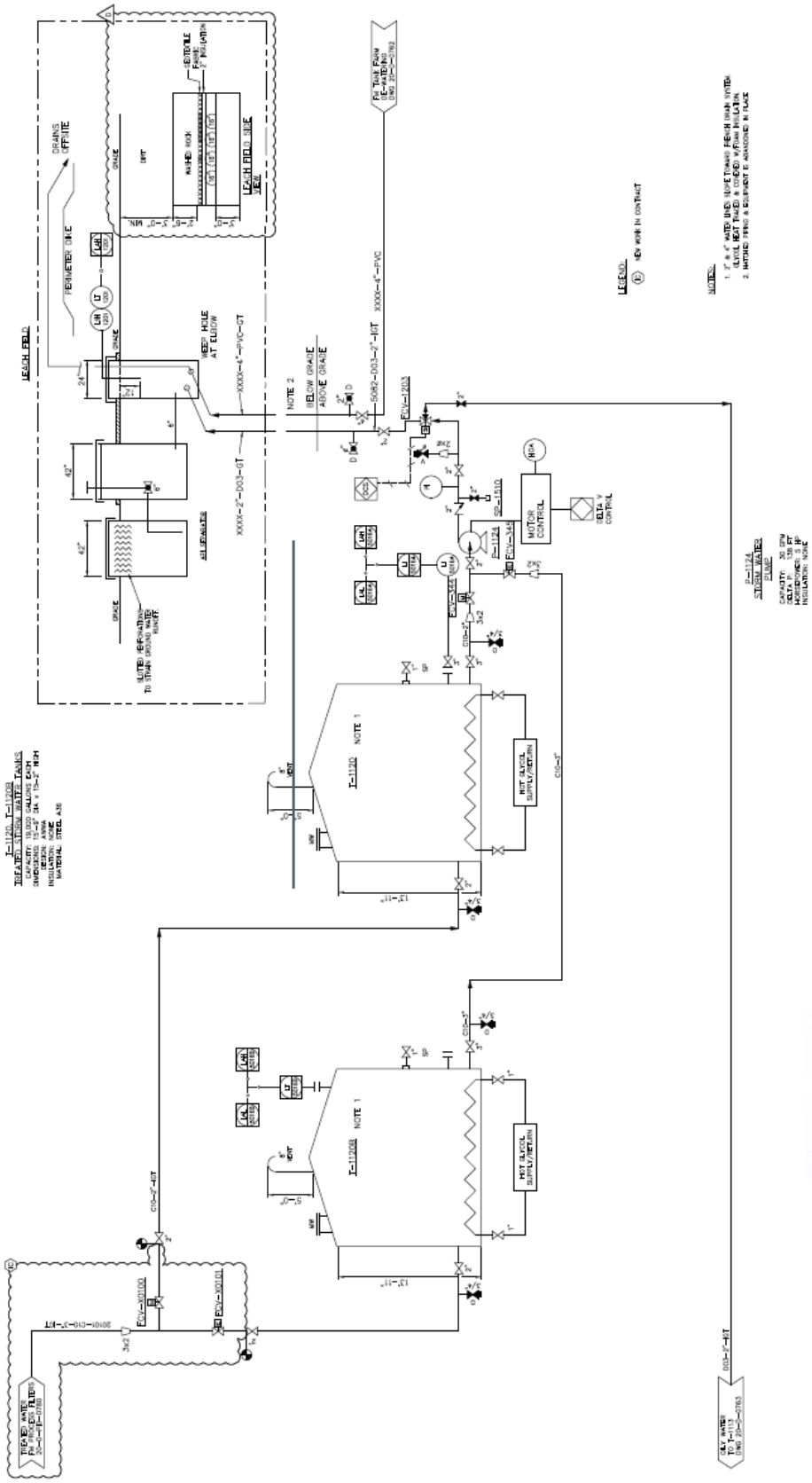
Figure 6: Existing Subsurface Disposal System Piping and Instrumentation Diagram