ALASKA POLLUTANT DISCHARGE ELIMINATION SYSTEM

PERMIT FACT SHEET – DRAFT

Permit: AK0001155 – Kenai Liquefied Natural Gas (LNG), LLC
Kenai Liquefied Natural Gas Plant

DEPARTMENT OF ENVIRONMENTAL CONSERVATION

Wastewater Discharge Authorization Program

555 Cordova Street
Anchorage, AK 99501

Public Comment Period Start Date: **September 22, 2020**
Public Comment Period Expiration Date: **October 23, 2020**
Alaska Online Public Notice System

Technical Contact: Gerry Brown, PE
Alaska Department of Environmental Conservation
Division of Water
Wastewater Discharge Authorization Program
555 Cordova Street
Anchorage, AK 99516
(907) 269-4874
Gerry.Brown@alaska.gov

Proposed issuance of an Alaska Pollutant Discharge Elimination System (APDES) permit to

KENAI LIQUEFIED NATURAL GAS, LLC

For wastewater discharges from

Kenai Liquefied Natural Gas Plant
48237 Kenai Spur Highway
Kenai, AK, 99611

The Alaska Department of Environmental Conservation (Department or DEC) proposes to reissue APDES individual permit AK0001155 – Kenai LNG, LLC, Kenai LNG Plant (Permit). The Permit authorizes and sets conditions on the discharge of pollutants from this facility to waters of the United States. In order to ensure protection of water quality and human health, the Permit places limits on the types and amounts of pollutants that can be discharged from the facility and outlines best management practices to which the facility must adhere.

This Fact Sheet explains the nature of potential discharges from the facility and the development of the Permit including:

- information on public comment, public hearing, and appeal procedures,
- a listing of proposed effluent limitations and other conditions,
- technical material supporting the conditions in the permit, and
- proposed monitoring requirements in the permit.

Public Comment

Persons wishing to comment on, or request a public hearing for the Draft Permit for this facility, may do so in writing by the expiration date of the public comment period.

Commenters are requested to submit a concise statement on the Permit condition(s) and the relevant facts upon which the comments are based. Commenters are encouraged to cite specific Permit requirements or conditions in their submittals.

A request for a public hearing must state the nature of the issues to be raised, as well as the requester's name, address, and telephone number. The Department will hold a public hearing whenever the Department finds, on the basis of requests, a significant degree of public interest in a draft permit. The Department may also hold a public hearing if a hearing might clarify one or more issues involved in a permit decision or for other good reason, in the Department's discretion. A public hearing will be held at the closest practicable location to the site of the operation. If the Department holds a public hearing, the Director will appoint a designee to preside at the hearing. The public may also submit written testimony in lieu of or in addition to providing oral testimony at the hearing. A hearing will be tape recorded. If there is sufficient public interest in a hearing, the comment period will be extended to allow time to public notice the hearing. Details about the time and location of the hearing will be provided in a separate notice.

All comments and requests for public hearings must be in writing and should be submitted to the Department at the technical contact address, fax, or email identified above (see also the public comments section of the attached public notice). Mailed comments and requests must be postmarked on or before the expiration date of the public comment period.

After the close of the public comment period and after a public hearing, if applicable, the Department will review the comments received on the Draft Permit. The Department will respond to the comments received in a Response to Comments document that will be made available to the public. If no substantive comments are received, the tentative conditions in the Draft Permit will become the proposed Final Permit.

The proposed Final Permit will be made publicly available for a five-day applicant review. The applicant may waive this review period. After the close of the proposed Final Permit review period, the Department will make a final decision regarding permit issuance. A Final Permit will become effective 30 days after the Department's decision, in accordance with the state's appeals process at 18 AAC 15.185.

The Department will transmit the Final Permit, Fact Sheet (amended as appropriate), and the Response to Comments to anyone who provided comments during the public comment period or who requested to be notified of the Department's final decision.

Appeals Process

The Department has both an informal review process and a formal administrative appeal process for final APDES permit decisions. An informal review request must be delivered within 20 days after receiving the Department's decision to the Director of the Division of Water at the following address:

Director, Division of Water
Alaska Department of Environmental Conservation
P.O. Box 111800
Juneau AK, 99811-1800

Interested persons can review 18 AAC 15.185 for the procedures and substantive requirements regarding a request for an informal Department review. See http://dec.alaska.gov/commish/review-guidance/informal-reviews for information regarding informal reviews of Department decisions.

An adjudicatory hearing request must be delivered to the Commissioner of the Department within 30 days of the permit decision or a decision issued under the informal review process. An adjudicatory hearing will be conducted by an administrative law judge in the Office of Administrative Hearings within the Department of Administration. A written request for an adjudicatory hearing shall be delivered to the Commissioner at the following address:

Commissioner
Alaska Department of Environmental Conservation
P.O. Box 111800
Juneau AK, 99811-1800

Interested persons can review 18 AAC 15.200 for the procedures and substantive requirements regarding a request for an adjudicatory hearing. See http://dec.alaska.gov/commish/review-guidance/adjudicatory-hearing-guidance/ for information regarding appeals of Department decisions.

Documents are Available

The Permit, Fact Sheet, application, and related documents can be obtained by visiting or contacting DEC between 8:00 a.m. and 4:30 p.m. Monday through Friday at the addresses below. The Permit, Fact Sheet, application, and other information are located on the Department's Wastewater Discharge Authorization Program website: http://dec.alaska.gov/water/wastewater/

Alaska Department of Environmental Conservation
Division of Water
Wastewater Discharge Authorization Program
555 Cordova Street
Anchorage, AK 99501
(907) 269-6285

Alaska Department of Environmental Conservation
Division of Water
Wastewater Discharge Authorization Program
43335 Kalifornsky Beach Road
Soldotna, AK 99615
(907) 262-5210

TABLE OF CONTENTS

1.0 INTRODUCTION 6
1.1 Applicant 6
1.2 Authority 6
1.3 Permit History 6
2.0 BACKGROUND 7
2.1 Facility Information 7
2.2 Wastewater Treatment System 7
2.3 Effluent Characterization 8
2.4 Ambient Water Characterization 11
2.5 Compliance History 11
3.0 RECEIVING WATERBODY 12
3.1 Water Quality Standards 12
3.2 Water Quality Status of Receiving Water 13
3.3 Mixing Zone Analysis 13
4.0 EFFLUENT LIMITS AND MONITORING REQUIREMENTS 18
4.1 Basis for Effluent Limits 18
4.2 Effluent Limits and Monitoring Requirements 19
4.3 Reporting TAqH Results 19
4.4 Chronic WET Monitoring 20
4.5 Electronic Discharge Monitoring Reports 22
4.6 Additional Monitoring 24
5.0 ANTIBACKSLIDING 25
5.1 Antibacksliding Analysis 25
6.0 ANTIDEGRADATION 26
6.1 Legal Basis 26
6.2 Receiving Water Status and Tier Determination 26
6.3 Tier 1 Analysis of Existing Use Protection 26
6.4 Tier 2 Analysis for Lowering Water Quality Not Exceeding Applicable Criteria 27
6.5 Tier 2 Analysis 28
7.0 OTHER PERMIT CONDITIONS 31
7.1 Standard Conditions 31
7.2 Quality Assurance Project Plan 31
7.3 Best Management Practices Plan 32

8.0 OTHER LEGAL REQUIREMENTS 32
8.1 Endangered Species Act 32
8.2 Essential Fish Habitat 33
8.3 Ocean Discharge Criteria Evaluation..... 33
8.4 Permit Expiration 33
9.0 References 34

TABLES

Table 1: Outfall 001 Characterization (August 2015 through October 2019) 9
Table 2: Outfall 001 Effluent Limits and Monitoring Requirements 19

FIGURES

Figure A-1: Kenai LNG Plant……38
Figure A-2: Water Balance Diagram.....……...…39
Figure A-3: Outfall Location……...40

LIST OF APPENDICES

APPENDIX A: FIGURES……38
APPENDIX B: BASIS FOR EFFLUENT LIMITS ……...41
APPENDIX C: REASONABLE POTENTIAL DETERMINATION ……47
APPENDIX D: MIXING ZONE ANALYSIS CHECKLIST ……..….54

1.0 INTRODUCTION

1.1 Applicant

This fact sheet provides information on the reissuance of the Alaska Pollutant Discharge Elimination System (APDES) permit for the following entity:

Owner:	Kenai Liquefied Natural Gas (LNG), LLC A subsidiary of Marathon Petroleum Corp. (Marathon)
Name of Facility:	Kenai LNG Plant
APDES Permit No:	AK0001155
Facility Location:	48237 Kenai Spur Highway, Kenai, AK, 99611
Mailing Address:	P.O. Box 3369, Kenai, AK 99611
Facility Contact:	Mr. Riley Lealos, Health & Environmental Science Professional

Outfall Location

Discharge Outfall	Receiving Water	Latitude	Longitude
001	Cook Inlet	60˚ 40’ 41” North	151˚ 23’ 37” West

Figure A-1 shows existing conditions and proposed modifications to the Kenai LNG plant.

1.2 Authority

The National Pollutant Discharge Elimination System (NPDES) Program regulates the discharge of wastewater to the waters of the United States (U.S.). For waters of the U.S. under jurisdiction of the State of Alaska, the NPDES Program is administered by DEC as the APDES Program.

Clean Water Act (CWA) Section 301(a) and Alaska Administrative Code (AAC) 18 AAC 83.015 provide that the discharge of pollutants to waters of the U.S. is unlawful except in accordance with an APDES permit. The Permit is being developed per 18 AAC 83.115 and 18 AAC 83.120. A violation of a condition contained in the Permit constitutes a violation of the CWA and subjects the permittee of the facility with the permitted discharge to the penalties specified in Alaska Statute (AS) 46.03.760 and AS 46.03.761.

1.3 Permit History

Phillips Petroleum Company constructed the Kenai LNG plant in 1967 and the first NPDES permit was originally issued on June 14, 1974 by EPA. Phillips Petroleum Company submitted an application for permit reissuance to EPA September 29, 1978 who issued an administrative extension of the permit until it could be reissued.

On June 30, 2006 ConocoPhillips Alaska, Inc. (CPAI) submitted an updated application to EPA who chose not to reissue the permit before the state obtained primacy under the APDES Program. Accordingly, DEC reissued the Permit under the APDES Program on August 1, 2015 based on a revised application from CPAI submitted on August 22, 2013. In early 2018 CPAI sold the plant to Andeavor who later merged with Marathon Petroleum Corporation (Marathon) in an agreement giving Marathon ownership of the Kenai LNG Plant. Hence, the Kenai LNG Plant is now owned by Kenai LNG, LLC, a subsidiary of Marathon. On February 3, 2020 Kenai LNG, LLC submitted a timely and

complete application for reissuance to DEC who issued an administrative extension until the Permit is reissued.

2.0 BACKGROUND

2.1 Facility Information

The existing Kenai LNG plant consists of a dock, a natural gas liquefaction facility, and a 1,050-horsepower boil-off gas (BOG) compressor. The plant began producing LNG for export in the 1960s and continued until 2015 when diminishing supplies of Cook Inlet natural gas prompted a transition to warm-idle status.

In March 2019, Kenai LNG, LLC applied to the Federal Energy Regulatory Commission for authorization to construct, install, own, and operate modifications to the plant. The proposed modifications, collectively known as the Kenai LNG Cool-Down Project (Project), include returning portions of the Plant to active status to process imported LNG for re-gasification and distribution as a fuel source to the neighboring refinery, also owned by Marathon. Under the Project, the liquefaction portion of the plant will continue to be maintained in a warm-idle status, rather than active status, at this time. Kenai LNG, LLC may propose a future project to further modify the plant but the timeline is uncertain and subject to future commercial review.

Kenai LNG, LLC proposes to complete the Project in 2020 and anticipates this mode of operation will not change the volume or characteristics of the currently permitted discharges over next five-year permit term.

2.2 Wastewater Treatment System

The existing plant utility water and steam supply systems include raw water, water treatment, and boiler systems which will not be affected by the Project. None of the new buildings or equipment skids will be supplied with steam, raw water, or cooling water, and there will be no new connections to the collection systems. The major contributors to the water balance, along with respective effluent pollutant source potentials, are described in the following paragraphs.

Plant wastewater originates from two contributing collection systems that combine into an aeration pond just prior to final treatment and subsequently discharge from Outfall 001. The first collection system primarily includes cooling tower and process boiler waste streams and secondarily storm water and softener regeneration backwash. The cooling towers and boilers may have chemical additives including sodium hypochlorite, pH control, oxygen scavenger, algaecide, corrosion/scale inhibitor, and deposit control agents. These wastewater sources comprise the first collection system prior to connection with the second collection system.

The second collection system primarily includes reverse osmosis (RO) reject water and domestic wastewater but also some contribution from an oil-water separator that treats oily wastewater from floor drains and the natural gas process unit. This combination of commingled waste streams is biologically treated in a waste activated sludge (WAS) plant.

The WAS plant includes a comminutor, primary clarifier, biological treatment, secondary clarifier, and chlorination.

Downstream of the WAS plant, the effluent from the second collection system combines with the waste streams from the first collection system to receive final treatment in polishing ponds. The polishing ponds include a detention pond and an aeration/oxidation pond that provides continued biological treatment, volatilization, settling, and pH control prior to discharging. The detention pond is typically bypassed but is available to provide flow equalization or to hold insufficiently treated effluent if necessary. The effluent discharged to Cook Inlet from the polishing ponds is the compliance point for Outfall 001. Figure 2 presents a water balance diagram for the plant which shows the process water, utility water, and domestic water and wastewater systems covered under the Permit.

2.3 Effluent Characterization

Effluent characterization is necessary to derive maximum probable parameter concentrations that are used to evaluate and size mixing zones as well as maximum expected concentrations (MECs) used in the reasonable potential analysis (RPA). The objective of characterization is to categorize parameters based on their likelihood of exceeding water quality criteria or existing limits. Only those parameters that warrant consideration as being a driving parameter for mixing zones or have reasonable potential to exceed, or contribute to an exceedance, of water quality criteria require a water quality-based effluent limit (WQBEL). Parameters that have concentrations near, but not exceeding, water quality criteria do not require limits but may be monitored during the term of the Permit. The following subsections provide characterization for these objectives.

Because the waste streams are combined in the aeration pond prior to discharge through Outfall 001, the characterization of the effluent is based on a relative mixture of the upstream inputs. The dominant portion of the mixture originates from cooling water and boiler condensate that includes sodium sulfite, an oxygen scavenger that can increase five-day biochemical oxygen demand (BOD_5). However, when mixed with other waste streams containing chlorine (e.g., WAS plant effluent), the oxygen scavenger and chlorine chemically react and tend to counteract each other. Trace concentrations of total residual chlorine (TRC) reported in micrograms per milliliter (μg/L) in the effluent is an indication that the sodium sulfite, and fecal coliform bacteria, has been effectively removed by oxidation and disinfection processes, respectively.

Building floor drainage and storm water from the process area can potentially contain oil and grease. Therefore, waters flowing from these areas are treated with an OWS, and Best Management Practices (BMPs) are implemented to minimize oil and grease in the storm water. Similar to floor drains, wastewater from the natural gas process unit is also treated by the OWS to remove oil and grease prior to receiving biological treatment in the WAS plant. The LNG process unit waste stream may contain total aqueous hydrocarbons (TAqH) downstream of the OWS. However, the flow through the OWS is typically less than 50 gallons per day (gpd) and is biologically treated in the WAS plant so the facility effluent is not expected to be significantly influenced by this waste stream.

Domestic wastewater effluent from the WAS plant contributes BOD_5, fecal coliform (FC) bacteria, enterococci (EC) bacteria, TRC, and total suspended solids (TSS). TSS concentrations have been observed to increase in the polishing pond system during the summer due to algae growth. When present in significant concentrations, algae can cause significant diurnal swings in effluent pH.

The groundwater source water for the facility contains naturally occurring elevated arsenic concentrations. An RO system was recently installed to reduce arsenic in the facility drinking water. Although the reject water from the RO system contains arsenic, the overall mass and concentration of arsenic in the effluent is not expected to change. The following sections characterize the combined effluent from the polishing ponds at the point of compliance.

Discharge monitoring data from August 2015 through October 2019 was reviewed to evaluate compliance with existing maximum daily limits (MDLs) and average monthly limits (AMLs) and to characterize the effluent as shown in Table 1.

Table 1: Outfall 001 Characterization (August 2015 through October 2019)

Parameter (Units)	Data Set	Criteria		Effluent Limits		Observed Range (Low – High, Avg.)[1]
		Acute	Chronic	MDL	AML	
Flow (million gallons per day (mgd))	1,517			0.35	Report	0 – 0.14, 0.06
Temperature (Degrees Celsius (C°))	1,499			Report		1.9 – 25.7, 12.7
pH [2] (standard units (su))	1,470	6.5 ≤ pH ≤ 8.5		6.5 ≤ pH ≤ 8.5		***1.0 – 9.3***, 7.6
BOD_5 (milligrams per liter (mg/L))	110	--	--	60	30	< 2.0 – 14.8, 4.3
TSS (mg/L)		--	--	60	30	< 1 – **72**, 6.6
Oil and Grease (mg/L)	50	--	--	10	5	< 4.0 – 5.0, 4.1
TRC (µg/L)	222	13	7.5	1,240	560	< 10 – ***630***, **78**
FC Bacteria (FC per 100 milliliter (FC/100 ml)) [3]	108	40	20	40	20	0 – 14, 1.3
EC Bacteria (colony forming units (CFU)/100 ml) [3]	48	130	35	Report		0 – **45**, 1.7
Total Ammonia as Nitrogen (mg/L) [4]	20	8.1	1.2	Report		0.2 – 1.0, 0.4
TAqH (µg/L)	15			Report		< 2 – 4, 4
Copper (µg/L)	50	4.8	3.1	Report		**6.4 – 127.0, 38.4**
Mercury (µg/L)	50	1.8	0.94	Report		< 0.0010 – 0.4280, 0.139

Notes:
1. Values that exceed applicable water quality criteria are presented in bold. Values that exceed any limit are italicized.
2. The median of pH is presented in lieu of average.
3. Averages for FC and EC bacteria are based on a geometric mean.
4. Ammonia water quality criteria are based on pH = 8.0 SU, temperature = 15°C, and salinity = 20 parts per thousand.

Those parameters for which monitoring results exceeded one or more applicable water quality criteria and/or permit limits are considered as a potential parameters of concern (POCs) for further analysis as described below along with other parameters that require additional explanations.

2.3.1 pH

Review of characterization data and compliance history reports reveals that pH limits have been exceeded during the review period. See Section 2.5.1.2 for a further information on the upset conditions associated with these exceedances.

2.3.2 TSS

The 2015 Permit authorized an AML of 30 μg/L, an MDL of 60 μg/L, and required monthly monitoring of TSS. Review of the characterization data shows a single TSS exceedance of 72 μg/L on July 6, 2016 and an overall average of 6.6 μg/L. Based on the single exceedance of the MDL, and the overall low average equaling approximately 20 percent of the average monthly limit, the TSS is considered an anomaly likely due to increased algae concentrations during late summer. Because limits for TSS are technology-based (i.e., no water quality criteria apply to TSS), consideration for inclusion in the mixing zone or the RPA is not applicable.

2.3.3 TRC

The 2015 Permit authorized an AML of 560 μg/L, an MDL of 1,240 μg/L, and required weekly monitoring for TRC. Review of the characterization data reveals that TRC has approached the monthly limit multiple times during the review period and is a POC applicable to further evaluation in the RPA and as a driving parameter in the mixing zone evaluation.

2.3.4 FC Bacteria

The 2015 Permit authorized an AML of 20 FC/100 ml, an MDL of 40 FC/100 ml, and required monthly monitoring of FC Bacteria. Review of the characterization data shows a single exceedance of the MDL which was reported as being due to a sewage plant upset. After removing this single exceedance as an outlier in the data set the highest observed value becomes 14 FC/100 ml which is below the permitted AML. Based on these results, FC bacteria needs to be included in the mixing zone but inclusion in the RPA is unnecessary because of the low number of bacteria counts when compared to other POCs.

2.3.5 EC Bacteria

The 2015 permit did not specify limits but required monthly monitoring of EC Bacteria as an additional indicator of human-caused bacteria in the effluent and for future consideration for inclusion in the mixing zone. The applicable criteria for EC bacteria is 35 cfu/100 ml based on a geometric mean and 130 cfu/100 ml based on a statistical threshold value. Review of the discharge data shows a geometric mean of 1.7 cfu/100 ml and a maximum value of 45 cfu/100 ml in a data set consisting of 48 samples. Based on these results, EC bacteria needs to be included in the mixing zone but inclusion in the RPA is unnecessary because of the low number of bacteria counts when compared to other POCs.

2.3.6 Copper

The 2015 permit does not specify limits but requires monthly monitoring of copper. The Water Quality Standards (WQS) specifies an applicable acute criterion of 4.8 µg/L and a chronic criterion of 3.1 µg/L for dissolved copper. Review of the characterization data shows copper concentrations in the effluent exceeded both criteria and is a POC applicable to further evaluation in the RPA and as a driving parameter in the mixing zone evaluation.

2.3.7 Chronic Whole Effluent Toxicity (WET)

The 2015 Permit required semiannual chronic WET testing using both vertebrate and invertebrate species. The vertebrate species were *Atherinops affinis* (topsmelt) and *Menidia beryllina* (inland silverside) as a substitute. The invertebrate species were *Crassostrea gigas* (Pacific Oyster) or *Mytilus sp*. (mussel) and *Americamysis bahia* (formerly *Mysidopsis bahia*, mysid shrimp) for survival and growth.

A total of 9 WET test events for the species described above (27 data points) were conducted during the review period. In all tests but one, the endpoint was not observed in the highest concentration tested, typically 75 percent effluent after hypersaline adjustments. The one test that indicated toxicity was for *Mytilus sp*, resulting in a maximum 1.40 chronic toxicity units (TU_c). Although consistently below detection, the one slightly elevated toxicity test result suggests chronic toxicity should be considered in the mixing zone. Given the vertebrate species were seemingly unaffected by the effluent, chronic WET testing of the vertebrate species can be discontinued.

2.4 Ambient Water Characterization

The 2015 Permit required monitoring of ammonia and various metals in their receiving waters to support future permit development. The receiving water data collected by the permittee was compiled with data from other permittees in the vicinity of the discharge to calculate an 85th percentile concentration of copper to represent ambient conditions in the RPA and mixing zone evaluation. Although other parameters were considered, only copper was necessary in the RPA and mixing zone for the Permit. Based on the compiled ambient data, the 85th percentile concentration for copper was calculated to be 1.84 µg/L.

2.5 Compliance History

2.5.1 Limits Exceedances

Facility compliance was evaluated for the time interval beginning August 2015 through October 2019 by reviewing the Integrated Compliance Information System and noncompliance notifications (NCNs) submitted by the permittee. The permittee submitted three NCNs during the review period as summarized below:

2.5.1.1 TSS Exceedance

The discharge exceeded the MDL for TSS on July 6, 2016 with a value reported at 72 mg/L but a noncompliance notification is not on record. As discussed in Section 2.3.2, TSS does not have applicable water quality criteria and the limits developed are technology-based. As common in Alaska, treatment ponds are known to experience

algal blooms during the long months of summer. Therefore, although considered a violation under the 2015 Permit the likely cause of this exceedance is believed to be algae. This assertion is supported by the otherwise relatively low average concentration observed in the discharge of 6 mg/L.

2.5.1.2 pH Exceedance

The permitted range for pH in wastewater discharge must be no less than 6.5 and no greater than 8.5 su ($6.5 \leq pH \leq 8.5$). An NCN submitted by the permittee on July 1, 2016 indicated pH levels in the discharge flow fell below 6.5 su for approximately five hours before flow was shut down to restored the pH to within permit limits. The NCN reported approximately 11,388 gallons of low pH wastewater was discharged prior to the shutdown and the exceedance was attributed to operational problems with the acid injection and pH control equipment. Following the shutdown, the permittee restored pH levels to within permit limits before restarting the discharge and took actions to prevent reoccurrences of the noncompliance. Based on the buffer capacity of the marine receiving water, a pH exceedance at the boundary of the chronic mixing zone is not likely during this event.

2.5.1.3 Oil & Grease False Positive

On June 5, 2017 the permittee submitted a sample to a laboratory for analysis, which was completed for oil and grease on June 8, 2017. However, the permittee was not notified that the results exceeded permit limits until the final report was issued on June 26, 2017. Upon obtaining the results on June 28, 2017 the permittee appropriately notified DEC of the exceedance of the oil and grease limit in a noncompliance notification. Following this notification, the permittee requested that the laboratory conduct a confirmation analysis on the original sample and of a new sample collected on June 28, 2017. The results of both samples indicated oil and grease concentrations were below detection levels. Based on the confirmation analysis, the previously reported noncompliance event was confirmed to have not occurred and the results of the original test were removed from the data set.

2.5.2 Reporting Violations

There have been no non-reporting violations during the period of review.

3.0 RECEIVING WATERBODY

3.1 Water Quality Standards

Section 301(b)(1)(C) of the CWA requires the development of limits in permits necessary to meet water quality standards by July 1, 1977. Per 18 AAC 83.435, APDES permits must include conditions to ensure compliance with 18 AAC 70 – Alaska WQS. The WQS are composed of waterbody use classifications, numeric and/or narrative water quality criteria, and an Antidegradation Policy. The use classification system designates the beneficial uses that each waterbody is expected to achieve. The numeric and/or narrative water quality criteria are the criteria deemed necessary by the state to support the

beneficial use classification of each waterbody. The Antidegradation Policy ensures that the beneficial uses and existing water quality are maintained.

Waterbodies in Alaska are designated for all uses unless the water has been reclassified under 18 AAC 70.230 as listed under 18 AAC 70.230(e). Some waterbodies in Alaska can also have site–specific water quality criterion per 18 AAC 70.235, such as those listed under 18 AAC 70.236(b). The Department has determined that there has been no reclassification nor has site-specific water quality criteria been established for Cook Inlet at the location of the permitted discharge. Accordingly, site-specific criteria is not applicable.

3.2 Water Quality Status of Receiving Water

Any part of a waterbody for which the water quality does not, or is not expected to, intrinsically meet applicable WQS is defined as a "water-quality limited segment" and placed on the state impaired waterbody list. For an impaired waterbody, Section 303(d) of the CWA requires states to develop a Total Maximum Daily Load (TMDL) management plan for the waterbody. The TMDL documents the amount of a pollutant a waterbody can assimilate without violating WQS and allocates that load to known point sources and nonpoint sources.

The portion of Cook Inlet where the discharge is located is not included as an impaired waterbody in the *Alaska's Final 2018 Integrated Water Quality Monitoring and Assessment Report*, March 6, 2020 (*2018 Integrated Report*) nor is it listed as a CWA 303(d) waterbody requiring a TMDL. Accordingly, a TMDL has not been established for the discharge.

3.3 Mixing Zone Analysis

Per 18 AAC 70.240, excluding 18 AAC 240(g)(1), (2), and (4) as amended through March 23, 2006 the Department may authorize mixing zone(s) in an APDES permit. Determination of mixing zones requires an evaluation of critical characteristics of the receiving water, effluent discharges and other pertinent factors, combined with use of an approved mixing zone modeling program such as the Cornell Mixing Zone Model (CORMIX).

The Mixing Zone Analysis Checklist (Appendix D) outlines the criteria that must be considered and met per mixing zone regulations for the Department to authorize a mixing zone. These criteria include the size of the mixing zone, treatment technology, existing uses of the waterbody, human consumption, spawning areas, human health, aquatic life, and endangered species. The following sections summarize the mixing zone analyses.

3.3.1 Modeling Process

Mixing zone modeling was conducted by both the applicant and DEC using the CORMIX model. The modeling by the applicant evaluated TRC as the driving parameter to size both the acute and chronic mixing zones based on their evaluation of probable maximum concentrations and required dilution to meet water quality criteria on a parameter by parameter basis. Upon conducting an independent evaluation, DEC determined that TRC is the driving parameter for the acute MZ but copper is the driving parameter for the chronic mixing zone. The differing driving parameter

determinations occurred because DEC did not concur with the discharge and ambient concentration inputs used in the applicant's RPA. The inputs used in the applicant and DEC model inputs are summarized below:

- Winter and summer 10th percentile current conditions: Both analyses assumed a 0.29 meters per second (m/s) current speed and a uniform density water column,
- Winter and summer 90 percentile current conditions: Both Analyses assumed a 1.69 m/s current speed and a uniform density water column.
- Plant Discharge Flow: Both analyses assumed a discharge flow of 0.153 cubic meters per second (m^3/sec) based on the maximum treatment capacity of the wastewater treatment system.
- Summer Discharge Temperature: The applicant analyses assumed a 25.7°C discharge temperature whereas the DEC analyses assumed a 17.2°C temperature based on the average temperature for the warmest six months of the year.
- Winter Discharge Temperature: The applicant analyses assumed a 22.8°C discharge temperature whereas the DEC assumed an 8.4°C discharge temperature based on the average temperature based on the coldest six months of the year.
- TRC Discharge Concentration: The applicant analyses used probable maximum TRC concentration of 650 µg/L based on their statistical evaluation of the data. Whereas, the statistical analyses used by DEC resulted in a probable maximum of 694 µg/L.
- Copper Discharge Concentration: The applicant mixing zone analyses did not evaluate copper. The DEC analyses used a probable maximum concentration for copper of 215 µg/L. In addition, DEC used an ambient copper concentration of 1.84 µg/L based on the 85th as discussed in Section 2.4.

Both the acute and chronic mixing zones are rectangular in shape with the area centered on Outfall 001 and aligned with the long axis parallel to the shoreline. The acute and chronic mixing zones extend from the seafloor to the sea surface with the following dimensions and dilution factors:

3.3.2 Mixing Zone Sizes

For Outfall 001, DEC authorizes a chronic mixing zone for TRC, copper, pH, temperature, and chronic toxicity with a dilution factor of 106. The chronic mixing zone is rectangular measuring 136 m long (68 m in each prevailing current direction) by 3 m wide extending from the seafloor (excluding sediments) to the receiving water surface. In addition, DEC authorizes an acute mixing zone with a dilution factor of 53. The acute mixing zone is a rectangle measuring 78 m long (39 m in each prevailing current direction) by 3 m wide and extending from the seafloor (excluding sediments) to the receiving water surface. The outfall location is shown in Appendix A, Figure A - 3.

3.3.3 Regulatory Size Constraints

Per 18 AAC 70.240(k), mixing zones must be as small as practicable and comply with size restrictions unless the Department finds evidence that reasonably demonstrates these size restrictions can be increased. Per 18 AAC 70.240(k)(1)(A), for marine waters the cumulative linear length measured at mean lower low water (MLLW) for all mixing zones intersected on any given cross section of an estuary, inlet, cove, channel, or other marine water may not exceed 10 % of the total length of that cross section. Additionally, per 18 AAC 70.240(k)(1)(B), the total horizontal area allocated to all mixing zones at any depth may not exceed 10 % of the surface area. The critical transect of Cook Inlet in the vicinity of the discharge is approximately 31 kilometers and intersects two other mixing zones, one for the Dillon Platform and the other for Trading Bay Production Facility. There is considerable distance (10 kilometers) between each of the intersected mixing zones. Given the dimension of all the chronic mixing zone along the transect total approximately 4. 95 kilometers, the linear length of all mixing zones along the critical transect is approximately 16 % of the total transect length. Although the total intersected length exceeds 10 %, the mixing zone for the Kenai LNG only accounts for about one thousandths (0.0016 %) of the total transect length. The applicable Cook Inlet area is approximately 416,500 hectares. From an area perspective the chronic mixing zone area, 0.02 hectares, to the overall area of state waters of Cook Inlet indicates the chronic mixing zone is less than 0.000005% of the overall surface area of the waterbody making it significantly smaller than the size allowed by 18 AAC 70.255(k)(1)(B).

Per 18 AAC 70.240(d)(7), acute mixing zones must be sized so there will be no reasonable expectation of lethality to passing organisms in the mixing zone. DEC begins the evaluation of potential lethality to passing organisms by calculating the exposure time required for drifting organisms to pass through the mixing zone during 10-percentile current conditions. If organisms spend less than 15 minutes in the mixing zone, no reasonable expectation of lethality would be anticipated. The maximum exposure time for the acute mixing zone is calculated by dividing the length of the mixing zone (39m in the down-current direction) by the 10th percentile current (0.29 m/s). The calculation indicates an organism would spend less than 2.5 minutes in the mixing zone.

3.3.4 Technology

18 AAC 70.240(c)(1) requires the Department to determine if "an effluent or substance will be treated to remove, reduce, and disperse pollutants, using methods found by the Department to be the most effective and technologically and economically feasible, consistent with the highest statutory and regulatory treatment requirements" before authorizing a mixing zone. Applicable "highest statutory and regulatory requirements" are described in 18 AAC 70.240(c)(A), (B), and (C) as follows:

- Any federal technology-based effluent limit (TBEL) identified in 40 CFR 125.3 and 40 CFR 122.29, as revised as of July 1, 2005 and adopted by reference;
- Minimum treatment standards in 18 AAC 72.050; and

- Any treatment requirement imposed under another state law that is more stringent than the requirement of this chapter.

The first part of the definition includes all applicable federal technology-based ELGs that may be adopted by reference at 18 AAC 83.010(g)(3) or TBELs developed using case-by-case best professional judgment (BPJ). There are no ELGs applicable to the permitted discharge. The Permit establishes TBELs developed using case-by-case BPJ for oil and grease, TSS, and BOD_5. The Department determines that the first part of the definition has been met.

The second part of the definition per 18 AAC 72.050 refers to the minimum treatment requirements for domestic wastewater. The limits for BOD_5 and TSS developed for domestic wastewater discharges are based on 18 AAC 72.050 and the definition of secondary treatment as per 18 AAC 72.990(59) and comply with minimum treatment standards in 18 AAC 72.050. Accordingly, the second part of the definition has been met.

The third part of the definition includes any treatment required by state law that is more stringent than 18 AAC 70. Other regulations beyond 18 AAC 70 that may apply to this permitting action include 18 AAC 83, 18 AAC 72 and 18 AAC 15. The Permit is consistent with 18 AAC 83, the minimum treatment requirements of 18 AAC 72 and neither the regulations in 18 AAC 15 nor another state legal requirement that the Department is aware of impose more stringent treatment requirements than 18 AAC 70. Therefore, the third and final part of the definition has also been met.

3.3.5 Existing Use

Per 18 AAC 70.240(c)(2), the mixing zones have been appropriately sized to fully protect the existing uses of Cook Inlet. Water quality criteria are developed to ensure protection of existing uses such that if the water quality is met in the receiving water the uses are protected. The mixing zones have been appropriately sized to meet applicable acute, chronic, and human health criteria at and beyond the boundary of the chronic mixing zone. Therefore, the mixing zones results in the protection of the existing uses of the waterbody as a whole.

3.3.6 Human Consumption

Per 18 AAC 70.240(c)(4)(C) a mixing zone must not preclude or limit established processing activities or commercial, sport, personal use, or subsistence fish and shellfish harvesting. Per 18 AAC 70.240(d)(6), the pollutants discharged cannot produce objectionable color, taste, or odor in aquatic resources harvested for human consumption.

There is no indication that the pollutants discharged would produce objectionable color, taste, or odor in aquatic resources harvested for human consumption. Additionally, the discharge has not precluded or limited established processing activities or commercial, sport, personal use, or subsistence fish and shellfish harvesting.

3.3.7 Spawning Areas

Per 18 AAC 70.240(e)(1) and (2), a mixing zone will not be authorized in lakes, streams, rivers, or other flowing freshwaters in spawning area of any of the five species of Pacific salmon found in the state or be allowed to adversely affect the present and future capability of an area to support spawning of these species. Per 18 AAC 70.240(f), a mixing zone will not be authorized in a spawning area for the following resident fish: Arctic Grayling; northern pike; lake trout; brook trout; sheefish; burbot; landlocked coho salmon, chinook salmon, or sockeye salmon; anadromous or resident rainbow trout, Arctic char, Dolly Varden, whitefish, or cutthroat trout. Because the permit does not authorize the discharge of effluent to open waters of a freshwater lake, river, or other flowing freshwater, there are no associated discharges to anadromous fish spawning areas or the resident freshwater fish listed in the regulation.

3.3.8 Human Health

Per 18 AAC 70.240(d)(1), a mixing zone may be approved if the Department finds that available evidence reasonably demonstrates that within the mixing zone pollutants will not bioaccumulate, bioconcentrate, or persist above natural levels in sediments, water, or biota to significantly adverse levels based on consideration of bioaccumulation and bioconcentration factors, toxicity, and exposure. In addition, per 18 AAC 70.240(d)(2) pollutants discharged must not present an unacceptable risk to human health from carcinogenic, mutagenic, teratogenic, or other effects as determined using a risk assessment method approved by the Department and consistent with 18 AAC 70.025, which indicates the lifetime incremental cancer risk level is 1 in 100,000 for exposed individuals. The only bioaccumulative and/or carcinogenic parameter in the discharge is mercury. The applicable human health criteria for mercury is 0.05 µg/L and the average concentration of mercury in the effluent is 0.139 µg/L, which requires a dilution factor of less than 3 to meet criteria. Hence, human health criteria will be met in the receiving water within one meter of the outfall. Even if higher concentrations of bioaccumulative pollutants are discharged, the benthic environment would not promote bioaccumulation in sediments or biota.

Cook Inlet, is a very dynamic waterbody and constantly changing tidal velocities and directions cause a continuous reworking and scouring of fine-grained sediments in the vicinity of the discharge, and as a result, bioaccumulative pollutants are not expected to persist in the bottom sediments or biota. The resulting bottom sediments at the vicinity of the discharge are characterized as sands, gravels, and cobbles with minor fractions (0.6 to 1.2 percent) of silt and clay. Analysis of metals and hydrocarbons in these sediments indicate there is no distinguishable difference in concentrations in the vicinity of the discharge with background sediment (Kent and Sullivan, 2005). Sediment concentrations are much lower than published criteria (Long, 1993). Furthermore, the benthic sediment at the vicinity of the discharge does not support the propagation of shellfish or other benthic species that could be consumed by humans.

3.3.9 Aquatic Life and Wildlife

Per 18 AAC 70.240(c), the Department will approve a mixing zone if there is available evidence that reasonably demonstrates (3) the overall biological integrity of the waterbody will not be impaired and (4) the mixing zone will not (A) result in acute or chronic toxic effect in the water column, sediments, or biota outside the boundaries of the mixing zone(s), (C) preclude or limit established processing activities or established commercial, sport, personal-use, or subsistence fish and shellfish harvesting, (D) result in a reduction in fish or shellfish population levels, (E) result in permanent or irreparable displacement of indigenous organisms, or (G) form a barrier to migratory species or fish passage.

Based on the mixing zone being sized to prevent lethality to drifting organisms (See Section 3.3.3), low discharge volume, outfall structure and location, coarse-grained benthic conditions, and tidal driven currents at the point of discharge affecting dispersion, the Department concludes aquatic life and wildlife will be maintained and protected.

3.3.10 Endangered Species

Per 18 AAC 70.240(c)(4)(F), the Department will approve a mixing zone if there is available evidence that reasonably demonstrates the mixing zone will not cause an adverse effect on threatened or endangered species except as authorized under the Endangered Species Act (ESA). DEC researched for the potential presence of endangered species on the U.S. Fish and Wildlife Service (FWS) and National Oceanic and Atmospheric Association (NOAA) websites (See Sections 8.1 and 8.2) along with consideration of mixing zone sizes local tidal and current conditions and concludes that the mixing zones are not likely to cause an adverse effect on threatened species.

4.0 EFFLUENT LIMITS AND MONITORING REQUIREMENTS

4.1 Basis for Effluent Limits

Per 18 AAC 83.015, the Department prohibits the discharge of pollutants to waters of the U.S. in Alaska unless the applicant has first obtained an APDES permit that meets the purposes of AS 46.03 and is in accordance with CWA Section 402. Per these statutory and regulatory provisions, the Permit includes effluent limits that require the discharger to meet standards reflecting levels of technological capability, comply with WQS, and comply with other state requirements that may be more stringent. The CWA requires that the limits for a particular pollutant be the more stringent of either TBELs or WQBELs.

The development of limits and monitoring requirements for the Permit is summarized in Appendix B. The limits for Outfall 001 include TBELs for BOD_5, TSS, and oil and grease and WQBELs for the parameters pH, copper, and TRC.

4.2 Effluent Limits and Monitoring Requirements

In accordance with AS 46.03.110(d), the Department may specify the terms and conditions for discharging wastewater in a permit. The Permit includes monitoring requirements so that compliance with effluent limits can be determined, but may also be required to characterize the effluent and to assess impacts to the receiving water. Sufficiently sensitive methods as required in 40 CFR 136 are required for analyzing collected samples. The permittee must report all violations of MDLs per Appendix A, Standard Conditions, Section 3.4 – 24-Hour Reporting. Violations of all other effluent limits are to be reported per Appendix A, Standard Conditions, Section 3.5 – Other Noncompliance Reporting. Effluent limits and monitoring requirements for Outfall 001 are summarized in Table 2.

Table 2: Outfall 001 Effluent Limits and Monitoring Requirements

Parameter (Units)	Effluent Limits		Monitoring Requirements	
	MDL	AML	Frequency	Sample Type
Flow (mgd)	0.35	Report	Continuous[2]	Meter
Temperature (° C)	Report		1/week	Meter
pH (su)	6.5 ≤ pH ≤ 8.5		1/week	Grab or Meter
TRC (µg/L)	690	270	1/week	Grab or Meter
Oil and Grease (mg/L)	10	5	1/month	Grab
Copper (µg/L)	211	99	1/month	Grab
BOD_5 (mg/L)	60	60	1/quarter	Grab
TSS (mg/L)	60	30	1/quarter	Grab
FC Bacteria (FC/100 ml)	Report		1/quarter	Grab
EC Bacteria (cfu/100 ml)	Report		1/quarter	Grab
Total Ammonia, as N (mg/L)	Report		1/quarter	Grab
TAqH (µg/L) [1]	Report		1/quarter	Grab
Mercury (µg/L)	Report		1/quarter	Grab
Chronic WET (TU_c)[2]	Report		1/year	Grab

Notes:

1. For reporting TAqH results below detection, refer to Section 4.3.
2. For Chronic WET monitoring requirements, see Section 4.4.

4.3 Reporting TAqH Results

For purposes of reporting on the DMR for a single sample for TAqH where the parameter is a summation of results of individual analytes, estimated (e.g., "J" estimates) are considered as nondetectable. When all individual analytes are nondetectable, or estimates, the permittee must report the categorical summation of the common method detection limits with a "less than [categorical summation of method detection limits]." If any of the analytes are detectable, the permittee must report the summation of only the detected analytes on the DMR without a less than symbol. See Permit Appendix C for Definition of Categorical Sum.

4.4 Chronic WET Monitoring

The Permit will require the permittee to conduct chronic WET testing of the Outfall 001 discharge in accordance with the following requirements.

4.4.1 Test Species and Methods

The permittee is required to conduct chronic WET testing on Outfall 001 for two invertebrate species. DEC can approve written requests to substitute species during periods when listed species are unavailable. The permittee shall not make any changes to the selection of test species or dilution series without prior written approval by DEC.

4.4.1.1 Invertebrate Species

For larval development tests, the permittee must use bivalve species *Crassostrea gigas* (Pacific Oyster) or *Mytilus spp*. (mussel) and *Americamysis bahia* (formally *Mysidopsis bahia*, mysid shrimp) for survival and growth. Due to seasonal variability, testing may be performed during reliable spawning periods (e.g., December through February for mussels and June through August for oysters).

4.4.2 Monitoring Frequency

The Permit specifies WET monitoring of the Outfall 001 discharge to be conducted annually.

4.4.3 Procedures.

The permittee must conduct chronic WET testing using the following procedures.

4.4.3.1 Methods and Endpoints

For the mysid shrimp the presence of chronic toxicity must be estimated as specified in *EPA Short-Term Methods for Estimating the Chronic Toxicity of Effluents and Receiving Waters to Marine and Estuarine Organisms, Third Edition* (EPA-821-R-02-014).

For the bivalve species (Pacific Oyster and mussel) chronic toxicity must be estimated as specified in *Short-Term Methods for Estimating the Chronic Toxicity of Effluents and Receiving Water to West Coast Marine and Estuarine Organisms* (EPA/600/R-95/136).

The WET testing will determine the 25 % effect concentration (EC_{25}) endpoint estimate of the effluent concentration that would cause a 25 % reduction in normal embryo development for the bivalves or in survival for mysid shrimp. The WET testing will also determine the inhibition concentration (IC_{25}) point estimate of the effluent concentration that would cause a 25 % reduction in the growth of mysid shrimp.

4.4.3.2 Reporting Results

Results must be reported on the DMR using TU_c, where $TU_c = 100/EC_{25}$ or $100/IC_{25}$. The reported EC_{25} or IC_{25} must represent the lowest point estimate calculated for the applicable survival, growth or normal embryo development endpoints. The permittee

must report the no observed effect concentrations (NOECs) in the full WET test report. DEC may compare this information with the IC_{25} during reissuance of this Permit.

4.4.3.3 **Acute Toxicity Estimates**

Although acute WET testing is not required, the permittee must provide an estimate of acute toxicity based on observations of mortality when appropriate (e.g., mysid shrimp). Acute toxicity estimates, if available, must be documented in the full report.

4.4.3.4 **Dilution Series**

A series of at least five dilutions and a control must be tested. The recommended initial dilution series to screen for toxicity is 3.125, 6.25, 12.5, 25, 50, and 75 % (or the maximum dilution after salinity adjustment) along with a control of dilution water (0 % effluent). In subsequent tests, the dilution series should be modified to bracket toxicity endpoints observed during previous tests. DEC may provide written direction to modify the previous dilution series or the permittee may request written approval from DEC to modify the dilution series based on previous test results.

4.4.3.5 **Hold Times**

The logistics of shipping WET samples to the lower 48 can be challenging as poor weather delays or missed connections during shipping can result in violation of the standard 36-hour hold time. If extenuating circumstances occur, WET samples hold times can exceed 36 hours but must not exceed 72 hours. The permittee must document the conditions that resulted in the need for the holding time to exceed 36 hours and any potential effect the extended hold time could have on the test results and include in the test report.

4.4.3.6 **Additional Quality Assurance Procedures**

In addition to those quality assurance measures specified in the methodology, the following quality assurance procedures must be followed:

a) If organisms are not cultured by the testing laboratory, concurrent testing with reference toxicants must be conducted, unless the test organism supplier provides control chart data from at least the previous five months of reference toxicant testing. Where organisms are cultured by the testing laboratory, monthly reference toxicant testing is sufficient.

b) If either of the reference toxicant tests or the effluent tests does not meet all test acceptability criteria as specified in the test methods manual, then the permittee shall re-sample and re-test within the following month.

c) Control and dilution water must be receiving water, or salinity adjusted lab water. If the dilution water used is different from the culture water, a second control, using culture water must also be used.

4.4.3.7 DMRs and Full Report Deliverables:

The permittee shall submit chronic WET test results on the DMR for the month following sample collection. The permittee must also submit the full WET Toxicity Report as an attachment to the DMR per Section 4.5.1.

If the results of any chronic WET test exceed 106 TU_c, the permittee shall include a written submittal to DEC explaining the cause of the high results and the steps taken to reduce the toxicity as an additional attachment to the DMR. In addition, the permittee shall repeat the WET testing within 30 days of receiving the report of high toxicity. Following review of the repeated test results, DEC may require additional testing per Section 4.5.3.

4.4.3.8 Full Report Preparation:

The report of results shall include all relevant information outlined in Section 10 of Report Preparation in the *U.S. EPA Short-Term Methods for Estimating the Chronic Toxicity of Effluents and Receiving Waters to Marine and Estuarine Organisms, Third Edition (EPA-821-R-02-014)*.

4.4.3.9 Additional Reporting Information:

In addition to toxicity test results, the permittee shall report:

a) The date and time of sample collection and initiation of each test,

b) The discharge flow rate at the time of sample collection, and

c) The results of the effluent analysis for chemical parameters for Outfall 001 as defined in Section 4.2, and

d) All raw data and statistical analysis from the tests, including reference toxicant tests.

4.5 Electronic Discharge Monitoring Reports

4.5.1 E-Reporting Rule, Phase I (DMRs)

The permittee must submit a DMR for each month by the 28th day of the following month. DMRs shall be submitted electronically through NetDMR per Phase I of the E-Reporting Rule (40 CFR 127). Authorized persons may access permit information by logging into the NetDMR Portal (http://cdxnodengn.epa.gov/oeca-netdmr-web/action/login). DMRs submitted in compliance with the E-Reporting Rule are not required to be submitted as described in Permit Appendix A – Standard Conditions unless requested or approved by the Department. Any DMR data required by the Permit that cannot be reported in a NetDMR field (e.g. full WET reports, mixing zone receiving water data, etc.), can be included as an attachment to the NetDMR submittal or submitted via email to dec-wqreporting@alaska.gov. DEC has also established an e-Reporting Information website (http://dec.alaska.gov/water/compliance/electronic-reporting-rule) that contains general information about this new reporting format. Training materials and webinars for NetDMR can be found at https://netdmr.zendesk.com/home.

4.5.2 E-Reporting Rule, Phase II (Other Reporting)

Phase II of the E-Reporting Rule specifies that permittees will integrate electronic reporting for all other reports required by the Permit (e.g., Annual Reports and Certifications) and implementation is expected to begin during the term of the Permit. Permittees should monitor DEC's E-Reporting website (http://dec.alaska.gov/water/compliance/electronic-reporting-rule/) for updates on Phase II of the E-Reporting Rule and will be notified when they must begin submitting all other reports electronically. Until such time, other reports required by the Permit may be submitted in accordance with Permit Appendix A – Standard Conditions.

4.5.3 Monitoring Frequency Reductions

DEC can reduce monitoring frequencies for selected parameters in a permit for permittees showing a record of good compliance during the previous permit cycle. DEC utilizes the *EPA Interim Guidance For Performance-Based Reduction of NPDES Permit Monitoring Frequencies* (*Frequency Reduction Guide*) while considering other factors. The *Frequency Reduction Guide* provides the statistical basis for assessing potential frequency reductions and other factors, typically including the size and type of facility, future data analyses needs, and other issues pertinent to the specific permit.

Of the parameters evaluated, TSS, BOD_5, FC and EC bacteria, mercury, and chronic WET monitoring qualified for a frequency reduction. The 2015 Permit limits TSS and BOD_5 in the discharge to an AML of 30 mg/L under normal operations and specified a sampling frequency of once per month. The DMR data for the review period shows a long-term average (LTA) for BOD_5 of 4.3 mg/L which is equal to 14.3% of the AML and for TSS the LTA is 6.6, which is equal to 22.0 % of the AML. After comparison to the interim guidance, and considering the analysis needs for future permit reissuances, DEC is reducing the monitoring frequency for TSS and BOD_5 to quarterly in the Permit.

The 2015 Permit established limits for FC and EC bacteria equal to criteria although a mixing zone was authorized. Since the issuance of the 2015 Permit, DEC has established guidance for conducting RPAs and development of WQBELs. Using established guidance, neither FC nor EC bacteria had reasonable potential to exceed, or contribute to an exceedance, of the respective water quality criteria for FC and EC bacteria. Accordingly, no limits have been developed but monitoring is to continue at a lesser frequency based on the low levels of bacteria observed during the period of review. Compared to the AMLs of 20 FC/100 ml for FC bacteria and 35 cfu/100 ml for EC bacteria, the geometric means were 1.3 FC/100 ml and 1.7 cfu/100 ml, respectively. These geometric means represent 6.5 % of the AML for FC bacteria and 4.9 % of the AML for EC bacteria, which justifies a monitoring reduction from monthly to quarterly.

During the term of the 2015 Permit, mercury was monitored monthly but no limits were established. The average for mercury was 0.139 µg/L; whereas, the chronic criteria is 0.94 µg/L, which relates to approximately 15 % of the chronic criteria. Accordingly, the mercury monitoring frequency is also reduced to quarterly in the Permit.

Lastly, chronic WET was monitored during the term of the 2015 Permit and on only one occasion did the results demonstrate a slight elevation of chronic toxicity. All other results, 26, did not result in observed endpoints in the highest concentration tested.

Although the 2015 Permit allowed for a reduction in frequency from semiannual to annual upon approval of a written request from the permittee, none were received. Based on the characterization data reviewed with this reissuance, the chronic WET monitoring frequency has been reduced to annual.

4.6 Additional Monitoring

DEC may require additional monitoring of effluent or receiving water for facility or site-specific purposes, including, but not limited to: data to support applications, demonstration of water quality protection, obtaining data to evaluate ambient water quality, evaluating causes of elevated concentrations of parameters in the effluent, and conducting chronic WET toxicity identification and reduction evaluations. If additional monitoring is required, DEC will provide the permittee or applicant the request in writing.

The permittee also has the option of taking more frequent samples than required under the Permit. These additional samples must be used for averaging if they are conducted using the Department approved test methods (generally found in 18 AAC 70 and 40 CFR 136 [adopted by reference in 18 AAC 83.010]). The results of any additional monitoring must be included in the calculation and reporting of the averaged data on DMRs as required by the Permit and Standard Conditions Part 3.2 and 3.3 (Permit Appendix A).

Monitoring for effluent limitations must use methods with method detection limits that are less than the effluent limitations or are sufficiently sensitive. Monitoring effluent or receiving water for the purpose of comparing to water quality criteria must use methods that are less than the applicable criteria or are sufficiently sensitive. Per 40 CFR 122.21(a)(3), a method approved under 40 CFR 136 is sufficiently sensitive when:

> (A) The method minimum level (ML) is at or below the level of the applicable water quality criterion for the measured parameter, or
>
> (B) The method ML is above the applicable water quality criterion, but the amount of the pollutant or pollutant parameter in the discharge is high enough that the method detects and quantifies the level of the pollutant or pollutant parameter in the discharge (e.g., not applicable to effluent or receiving water monitored for characterization), or
>
> (C) The method has the lowest ML of the analytical methods approved under 40 CFR 136 for the measured pollutant or pollutant parameter (e.g., the receiving water concentration or the criteria for a given pollutant or pollutant parameter is at or near the method with the lowest ML).

The determination of sufficiently sensitive methods discussed above for a single analyte is not applicable to TAqH due to the summation of multiple analytes. Therefore, for TAqH, DEC may apply a typical multiplier of 3.2 to the categorical sum of the method detection limits to “estimate” an ML for comparison with water quality criteria for TAqH. If the “estimated ML” is greater than the criteria, 15 µg/L, DEC may request submittal of the analytical report to conduct a comprehensive review of those particular analytical results.

5.0 ANTIBACKSLIDING

Per 18 AAC 83.480, "effluent limitations, standards, or conditions must be at least as stringent as the final effluent limitations, standards, or conditions in the 2015 Permit." Per 18 AAC 83.480, a permit may not be reissued "to contain an effluent limitation that is less stringent than required by effluent guidelines in effect at the time the Permit is renewed or reissued."

Effluent limitations may be relaxed as allowed under 18 AAC 83.480(b), CWA Section 402(o) and CWA Section 303(d)(4). 18 AAC 83.480(b) allows relaxed limitations in renewed, reissued, or modified permits when there have been material and substantial alterations or additions to the permitted facility that justify the relaxation, or, if the Department determines that technical mistakes were made.

CWA Section 303(d)(4)(A) states that, for waterbodies where the water quality does not meet applicable WQS, effluent limitations may be revised under two conditions, the revised effluent limitation must ensure the attainment of the WQS (based on the waterbody TMDL or the waste load allocation) or the designated use which is not being attained is removed in accordance with the WQS regulations.

CWA Section 303(d)(4)(B) states that, for waterbodies where the water quality meets or exceeds the level necessary to support the waterbody's designated uses, WQBELs may be revised as long as the revision is consistent with the State's Antidegradation Policy. Even if the requirements of CWA Section 303(d)(4) or 18 AAC 83.480(b) are satisfied, 18 AAC 83.480(c) prohibits relaxed limits that would result in violations of WQS or ELGs (if applicable).

State regulation 18 AAC 83.480(b) only applies to effluent limitations established on the basis of CWA Section 402(a)(1)(B), and modification of such limitations based on effluent guidelines that were issued under CWA Section 304(b). Accordingly, 18 AAC 83.480(b) applies to the relaxation of previously established case-by-case TBELs developed using BPJ. To determine if backsliding is allowable, the regulation provides five regulatory criteria in 18 AAC 83.480(b)(1-5) that must be evaluated and satisfied.

5.1 Antibacksliding Analysis

As a result of following recently adopted guidance for conducting RPAs and developing WQBELs, limits for FC and EC bacteria have been eliminated from the Permit. Previously, there was insufficient data to determine if a limit should be imposed so DEC established limits based on criteria until data became available to re-evaluate. Based on data obtained during the term of the 2015 Permit, there was no reasonable potential for FC or EC bacteria to exceed, or contribute to an exceedance, of respective water quality criteria at the boundary of the chronic mixing zone necessitating limit development. In addition, the requirement to conduct chronic WET testing on vertebrates has been eliminated from the Permit. This modification is based on new information obtained during the term of the permit indicating that there is no toxic response to vertebrate species. However, chronic WET testing of invertebrates is retained based on one observed result suggesting low level chronic effects. Lastly, the 2015 Permit required receiving water monitoring due to lack of data needed to assess the ambient receiving water concentrations of selected parameters of interest. Since obtaining data, DEC considers the data sufficient for future needs and has removed this requirement from the Permit. All of these less stringent requirements imposed in the permit are based on obtaining new information per 40 CFR 122.44(l)(2)(i)(B)(1)

and comply with WQS including the Antidegradation Policy. Therefore, these less stringent requirements are allowable per 40 CFR 122.44(l)(2)(ii).

6.0 ANTIDEGRADATION

6.1 Legal Basis

Antidegradation is implicit in CWA Section 101(a) goals, explicitly referenced in CWA Section 303(d)(4)(B), and implemented through 40 CFR 131.12. Section 303(d)(4) of the CWA states that, for waterbodies where the water quality meets or exceeds the level necessary to support the waterbody's designated uses, WQBELs may be revised as long as the revision is consistent with the State Antidegradation Policy and Implementation Methods. Alaska's current Antidegradation Policy and Implementation Methods are presented in 18 AAC 70.015 *Antidegradation Policy* (*Policy*) and in 18 AAC 70.016 *Antidegradation Implementation Methods for Discharges Authorized Under the Federal Clean Water Act* (*Implementation Methods*). For these state regulations to apply under the CWA, they must be previously approved by EPA per CWA Section 303(c)(3). The policy and implementation methods have been amended through April 6, 2018; are consistent with the CWA and 40 CFR 131.12; and were approved by EPA on July 26, 2018.

The following subsections document Department conformance with the *Policy* and *Implementation Methods* for reissuance of APDES Permit AK0001155.

6.2 Receiving Water Status and Tier Determination

Per the *Implementation Methods*, the Department determines a Tier 1 or Tier 2 classification and protection level on a parameter by parameter basis. The *Implementation Methods* also describe a Tier 3 protection level applying to designated waters, although at this time no Tier 3 waters have been designated in Alaska.

The marine waters of Cook Inlet, covered under the Permit, are not listed as impaired (Categories 4 or 5) in the *2018 Integrated Report*. Therefore, no parameters have been identified where only the Tier 1 protection level applies. Accordingly, this antidegradation analysis conservatively assumes that the Tier 2 protection level applies to all parameters, consistent with 18 AAC 70.016(c)(1).

Per 18 AAC 70.015(a)(2), if the quality of water exceeds levels necessary to support propagation of fish, shellfish, wildlife, and recreation in and on the water, that quality must be maintained and protected, unless the Department authorizes a reduction in water quality.

Prior to authorizing a reduction of water quality, the Department must first analyze and confirm the findings under 18 AAC 70.015(a)(2)(A-D) are met. The analysis must be conducted with implementation procedures in 18 AAC 70.016(b)(5)(A-C) for Tier 1 protection, and under 18 AAC 70.016(c)(7)(A-F) for Tier 2 protection. These analyses and associated finding are summarized below.

6.3 Tier 1 Analysis of Existing Use Protection

The summary below presents the Department's analyses and findings for the Tier 1 analysis of existing use protections per 18 AAC 70.016(b)(5) finding that:

(A) existing uses and the water quality necessary for protection of existing uses have been identified based on available evidence, including water quality and use related data, information submitted by the applicant, and water quality and use related data and information received during public comment;

The Department reviewed water quality data, environmental monitoring studies, and information on existing uses in the vicinity of Outfall 001 submitted by the applicant. The Department finds the information reviewed as sufficient to identify existing uses and water quality necessary for Tier 1 protection.

(B) existing uses will be maintained and protected*;*

Per 18 AAC 70.020 and 18 AAC 70.050, marine waters are protected for all uses. Therefore, the most stringent water quality criteria found in 18 AAC 70.020 and in the *Alaska Water Quality Criteria Manual for Toxic and Other Deleterious Organic and Inorganic Substances* (DEC 2008) apply and were evaluated to ensure existing uses and the water quality necessary for protection of existing uses of the receiving waterbody are fully maintained and protected.

(C) the discharge will not cause water quality to be lowered further where the department finds that the parameter already exceeds applicable criteria in 18 AAC 70.020(b), 18 AAC 70.030, or 18 AAC 70.236(b).

The Permit will require that the discharge shall not cause or contribute to a violation of WQS. As previously stated, the marine waters of Cook Inlet covered under this Permit are not listed as impaired; therefore, no parameters were identified as already exceeding the applicable criteria in 18 AAC 70.020(b) or 18 AAC 70.030.

The Department concludes the terms and conditions of the Permit will be adequate to fully protect and maintain the existing uses of the water and that the findings required under 18 AAC 70.016(b)(5) are met.

6.4 Tier 2 Analysis for Lowering Water Quality Not Exceeding Applicable Criteria

6.4.1 Scope of Tier 2 Analysis

Per 18 AAC 70.016(c)(2), an antidegradation analysis is only required for those waterbodies needing Tier 2 protection and which have any new or existing discharges that are being expanded based on permitted increases in loading, concentration, or other changes in effluent characteristics that could result in comparative lower water quality or pose new adverse environmental impacts. Additionally, per 18 AAC 70.016(c)(3), DEC is not required to conduct an antidegradation analysis for a discharge the applicant is not proposing to expand.

Given this Fact Sheet is the basis for reissuing the Permit and authorizing the discharge from Outfall 001, DEC reviewed information provided by the applicant to determine if the discharge requires a Tier 2 evaluation. The review indicates the information provided is sufficient and credible per 18 AAC 70.016(c)(4) and resulted in adoption of a new discharge limit for copper. Accordingly, a Tier 2 analysis is necessary for new copper WQBEL.

6.5 Tier 2 Analysis

Per 18 AAC 70.015(a)(2), if the quality of water exceeds levels necessary to support propagation of fish, shellfish, wildlife, and recreation in and on the water (i.e., Tier 2 waters), that quality must be maintained and protected. The Department may allow a reduction of water quality only after finding that the most practicable and effective pollution prevention, control, and treatment methods are being used such that lowering of water quality is necessary. Upon making this determination, the specific requirements of the policy noted in 18 AAC 70.015(a)(2)(A)-(D) must be met. The Department's findings are presented below.

6.5.1 Tier 2 Alternatives Analysis

Per 18 AAC 70.016(c)(4)(C-F) the applicant must submit a description and analysis of a range of practicable alternatives that have the potential to prevent or lessen the degradation associated with the expanded discharge. The analysis must identify the water quality environmental impacts, and relative costs for each practicable alternative.

6.5.2 Basis for Reduction of Water Quality

Based on the above finding, the Department can authorize a reduction in water quality only after the applicant has submitted evidence in accordance with the following requirements under 18 AAC 70.015(a)(2):

(A) Allowing lower water quality is necessary to accommodate important economic or social development in the area where the water is located.

The Kenai LNG plant is an important part of the Alaska and Kenai Peninsula economies. When it is operational the plant provides stable family-wage jobs for over 30 local residents and more than 30 specialized contractors.

The proposed BOG management project is expected to reduce environmental impacts of the plant operations and prevent economic waste by using 5,000 MMBtus/day of natural gas that would otherwise be vented or flared.

The routine turnaround schedules associated with plant operation help to preserve a strong local support industry, which provides additional jobs for the community and enhances available services for other local industry operations.

The local housing market is supported by the fact that nearly all Kenai LNG, LLC employees and contractors live in surrounding Kenai Peninsula communities.

The plant provides significant ongoing tax revenue to Federal, State, and local governments through its property, corporate income, and sales taxes.

Other economic benefits to the community accrue from the plant's large steady base load power requirements that allow the local cooperative power utility to provide the economy of scales that would not be available without a large industrial base client.

Based on the above information, the Department determined that the permitted activities are necessary to accommodate important economic and social development, the anticipated lowering of water quality is necessary for these purposes, and that the finding is met.

(B) Except as allowed under this subsection, reducing water quality will not violate the applicable criteria of 18 AAC 70.020 or 18 AAC 70.235 or the whole effluent toxicity limit in 18 AAC 70.030.

18 AAC 70.020(b) specifies the protected water use classes, subclasses, and water quality criteria. The Permit places limits and conditions on the discharge of pollutants. The limits and conditions are established after comparing TBELs and WQBELs and applying the more stringent of these limits, or any other requirements from statutes or regulations that may be more stringent. The water quality criteria, upon which the WQBELs are based, serve the specific purpose of protecting the existing and designated uses of the receiving water. In situations where a limit is not necessary because the effluent characteristics does not require a limit to comply with WQS per the RPA, a previous limited parameter may become relegated to monitoring only, constituting an allowable backsliding condition (See Section 5.1). It is also common for a parameter that was previously monitored to have a limit developed based on new information used in the RPA. For example, the Permit includes authorization of a chronic mixing zone with a dilution factor of 106 for Outfall 001 based on copper being the driving parameter for the mixing zone and, accordingly, requires a new copper WQBEL. Copper had previously only been monitored in the 2015 Permit. As copper was the driving parameter for sizing the mixing zone, all other parameters evaluated met their respective water quality criteria prior to the boundary of the authorized chronic mixing zone. Hence, so long as the copper limit is met, reducing water quality will not result in violating applicable criteria of 18 AAC 70.020.

DEC reviewed the list of waterbodies in 18 AAC 70.236 where site-specific criteria has been developed. The discharge location is not listed as having site-specific criteria so the requirement in 18 AAC 70.235 is not applicable.

18 AAC 70.030(a) applies to WET limits and requires that an effluent discharged to a water may not impart chronic toxicity to aquatic organisms, expressed as 1.0 TU_c, at the point of discharge, or if the department authorizes a mixing zone in a permit at or beyond the mixing zone based on the minimum effluent dilution achieved in the mixing zone. Chronic WET is one of the authorized mixing zone parameters for Outfall 001 but no limit is required based on evaluation of the data. The maximum observed chronic toxicity in the effluent for invertebrates was 1.4 TU_c and the results for vertebrates did not indicate chronic toxicity. Therefore, the vertebrates were removed from the Permit but the invertebrates were retained. Given the authorized chronic mixing zone dilution factor is 106, a chronic WET result would have to be greater than 106 TU_c to exceed chronic WET criteria in order to require a limit. Hence, no chronic WET limit is imposed in the Permit and the requirements of 18 AAC 70.030(a) are met.

(C) The resulting water quality will be adequate to fully protect existing uses of the water.

As discussed in part (B) of the preceding Tier 1 analysis, marine waters under the Permit are protected for uses. Per 18 AAC 70.050(3), the marine waters of Cook Inlet must be protected for all marine water uses as defined under 18 AAC 70.020(a)(2). All water quality criteria are met at and beyond the boundary of the authorized chronic mixing zone. Accordingly, because the water quality criteria that ensures protection of existing uses are

met and the analysis considered all use classes and subclasses, the existing uses of the waterbody as a whole are protected.

(D) All wastes and other substances discharged will be treated and controlled to achieve (i) for new and existing point sources, the highest statutory and regulatory requirements...

The applicable "highest statutory and regulatory treatment requirements" are defined in 18 AAC 70.015(d). The definition includes the four components noted below:

(1) Any federal technology-based effluent limitation identified in 40 C.F.R. 122.29 and 125.3, revised as of July 1, 2017 and adopted by reference;

Although EPA has developed national secondary treatment standards for publicly-owned treatment works (POTWs) it has not done so for non-POTWs discharging domestic wastewater and in the absence of national standards TBELs for these facilities are instead developed on a case-by-case basis. Under 40 CFR 125.3(a), the TBELs for existing facilities must represent the minimum level of control that must be imposed in a permit and for existing facilities based on Best Practicable Control Technology Currently Available, Best Conventional Pollutant Technology, and Best Available Technology Economically Achievable and must consider appropriate for the class or category of the discharge and any unique factors related to the facility. The TBELs analysis presented in Appendix B documents the TBELs analysis for the plant and addresses this requirement.

(2) any minimum treatment standards identified in 18 AAC 72.050;

This part of the definition addresses the minimum treatment standards for domestic wastewater discharges. Per 18 AAC 72.050(a)(4) domestic wastewater discharges into the waters of the U.S. must have received secondary treatment prior to discharge. As described in earlier Section 2.2, the domestic wastewater treatment system is a WAS plant meeting secondary treatment standards required under 18 AAC 72.050 and this part of the definition is thus met.

(3) any treatment requirements imposed under another state law that is more stringent than a requirement of this chapter; and

This part of the definition includes any treatment required by state law that is more stringent than 18 AAC 70. Other regulations beyond 18 AAC 70 that may apply to this permitting action include 18 AAC 15, 18 AAC 72, and 18 AAC 83. The Permit is consistent with the minimum treatment requirements of 18 AAC 72 and 18 AAC 83 and neither the regulations in 18 AAC 15, nor any other state legal requirement that the Department is aware of, impose more stringent treatment requirements than 18 AAC 70. Therefore, this part of the definition is met.

(4) any water quality-based effluent limitations established in accordance with 33 U.S.C. 1311(b)(1)(C)(Clean Water Act, sec. 301(b)(1)(C).

Alaska WQBELs are developed using water quality criteria presented in the "*Toxics Manual*" (amended through December 12, 2008) and 18 AAC 70.020 (amended through April 6, 2018). These regulatory references present criteria taken from EPA development documents cited in references and the Alaska

Drinking Water Regulations in 18 AAC 80. Therefore, this part of the definition is met.

Based on the results of the receiving water study conducted under the 2015 Permit, nonpoint source pollution for copper does not appear to have a significant impact on the assimilative capacity of the receiving water. The chronic water quality criteria is 3.73 mg/L; whereas, the 85th percentile of the receiving water copper results is 1.84 mg/L. In addition, the Permit requires the permittee to implement BMP Plans to minimize the production and discharge of pollutants from various sources. These requirements provide additional oversight of treatment processes and protection of the receiving waters and overall environment in the vicinity of the discharge.

Per the documentation of the four parts, of the highest statutory and regulatory treatment requirements shown above, this finding is met.

6.5.1 Tier 2 Analysis Finding

Based on meeting the four findings required per 18 AAC 70.015(a)(2)(A)-(D), the Department finds that the requirements of the Antidegradation Policy have been met.

7.0 OTHER PERMIT CONDITIONS

7.1 Standard Conditions

Appendix A of the Permit contains standard regulatory language that must be included in all APDES permits. These requirements are based on the regulations and cannot be challenged in the context of an individual APDES permit action. The standard regulatory language covers requirements such as monitoring, recording, reporting requirements, compliance responsibilities, and other general requirements. However, because the due date for DMRs is not codified in regulation, DEC has established a DMR due date that is different from that included in the Standard Conditions based on impracticality given logistical considerations for the facility.

7.2 Quality Assurance Project Plan

The permittee is required to develop and implement a facility-specific Quality Assurance Project Plan (QAPP) that ensures all monitoring data associated with the Permit are accurate and to explain data anomalies if they occur. The permittee is required to develop and implement procedures in the QAPP that document standard operating procedures the permittee must follow for collecting, handling, storing and shipping samples; laboratory analysis (e.g., most sensitive methods); and data reporting. If a QAPP has already been developed and implemented, the permittee must review and revise the existing QAPP to ensure it includes the necessary content. The permittee must submit a letter to the Department within 90 days of the effective date of the Permit certifying that the QAPP has been revised and implemented. The QAPP shall be retained onsite and made available to the Department upon request.

7.3 Best Management Practices Plan

A BMP Plan presents operating and housekeeping measures intended to minimize or prevent the generation and potential release of pollutants from a facility to the waters of the U.S. during normal operations and additional activities. Per 18 AAC 83.475(4), "A permit must include best management practices to control or abate the discharge of pollutants and hazardous in a permit when the practices are reasonably necessary to achieve effluent limitations and standards…" To support compliance with the new copper limit, the BMP Plan requires a specific BMP to control or abate copper sources in the wastewater.

Within 90 days of the effective date of the Permit, the permittee must review, revise as necessary, and implement the BMP Plan to address current activities at the plant and submit written certification of the review, revision and implementation to DEC.

In each subsequent year of the Permit, the permittee must establish a committee to review and revise the BMP Plan as necessary to address any modifications or changes to operational practices at the plant and to continue to meet the objectives and specific requirements of the Permit. The permittee must complete a written certification that the BMP Plan review committee has reviewed the BMP Plan, and modify it if necessary, by January 31st of each year the Permit remains in effect. Subsequent certifications after the initial certification of the BMP Plan must be retained in records onsite and made available to DEC upon request.

8.0 OTHER LEGAL REQUIREMENTS

8.1 Endangered Species Act

Per Section 7 of the Endangered Species Act (ESA), federal agencies are required to consult with NOAA National Marine Fisheries Service (NMFS) and the U.S. Fish and Wildlife Service (FWS) if their actions could beneficially or adversely affect any threatened or endangered species. As a state agency, DEC is not required to consult under Section 7 regarding wastewater discharge permitting actions. However, this does not absolve DEC from complying with Section 9 and 10 of the ESA. DEC ensures compliance with Sections 9 and 10 of the ESA by voluntarily sending emails to the NMFS and FWS, which occurred on January 17, 2020. This notification requested a listing of endangered species in the vicinity of the discharge and provides early notice to the services concerning development of the Permit to allow for additional dialog, if necessary, to ensure the ESA compliance. If no issues are raised, DEC considers the requirements of the ESA are met.

FWS responded to DEC in an email dated January 29, 2023 which provided a link to the agency webpage at https://ecos.fws.gov/ipac/ to research critical habitat listings. DEC accessed the webpage and learned that the short-tailed albatross could be potentially affected by activities in the area of the LNG plant.

NMFS did not respond to the email request and DEC therefore searched for potential listings on the agency's online Marine Mammal Species Range and Critical Habitat Interactive at https://alaskafisheries.noaa.gov/portal/apps/webappviewer/. Review of the map indicated that the plant is located the general distribution area for Steller Sea Lions

and Cook Inlet Beluga Whales which are both protected under both the Endangered Species and Marine Mammal Protection Acts.

8.2 Essential Fish Habitat

Essential fish habitat (EFH) includes waters and substrate (sediments, etc.) necessary for fish from commercially-fished species to spawn, breed, feed, or grow to maturity. The Magnuson-Stevens Fishery Conservation and Management Act (January 21, 1999) requires federal agencies to consult with NOAA when a proposed discharge has the potential to adversely affect (reduce quality and/or quantity of) EFH. As a State agency, DEC is not required to consult with these federal agencies regarding EFH; DEC did however voluntarily send an email request to NOAA on January 17, 2020 notifying the agency of current permit development activities and requesting critical habitat listings in the vicinity of the plant and has not received a response.

DEC therefore reviewed EFH information at NOAA's Habitat Conservation Interactive EFH Mapper at: http://www.habitat.noaa.gov/protection/efh/efhmapper/index.html which indicated that Chinook, Chum, and Pink Salmon are known to be present the area but that no Essential Fish Habitats (EFH) or Habitat Areas of Particular Concern (HAPC) were identified at the report location."

8.3 Ocean Discharge Criteria Evaluation

CWA Section 403(a), Ocean Discharge Criteria, prohibits the issuance of a permit under CWA Section 402 for a discharge into the territorial sea, the water of the contiguous zone, or the oceans except in compliance with Section 403. Permits for discharges seaward of the baseline on the territorial seas must comply with the requirements of Section 403, which include development of an Ocean Discharge Criteria Evaluation (ODCE).

The Permit requires compliance with Alaska WQS. Consistent with 40 CFR 125.122(b), adopted by reference at 18 AAC 83.010(C)(8), discharges in compliance with Alaska WQS shall be presumed not to cause unreasonable degradation of the marine environment. EPA made the connection between the similar protections provided by ODCE requirements and WQS when promulgating ocean discharge criteria rules in 1980, as stated, "the similarity between the objectives and requirements of [state WQS] and those of CWA Section 403 warrants a presumption that discharges in compliance with these [standards] also satisfy CWA Section 403." (Ocean Discharge Criteria, 45 Federal Register 65943.). As such, given the Permit requires compliance with Alaska WQS, unreasonable degradation to the marine environment is not expected and further analysis under 40 CFR 125.122 is not warranted for this permitting action.

8.4 Permit Expiration

The Permit will expire five years from the effective date of the Permit.

9.0 References

1. Alaska Department of Environmental Conservation, 2003. *Alaska Water Quality Criteria Manual for Toxics and Other Deleterious Organic and Inorganic Substances*, as amended through December 12, 2008.
2. Alaska Department of Environmental Conservation. *Alaska's Final 2018 Integrated Water Quality Monitoring and Assessment Report*, March 6, 2020.
3. Alaska Department of Environmental Conservation. *18 ACC 70. Water Quality Standards*, as amended through June 26, 2003.
4. Alaska Department of Environmental Conservation. *18 ACC 70. Water Quality Standards*, as amended through July 1, 2008.
5. Alaska Department of Environmental Conservation. *18 ACC 70. Water Quality Standards*, as amended through April 8, 2012.
6. Alaska Department of Environmental Conservation. *18 ACC 70. Water Quality Standards*, as amended through February 19, 2016.
7. Alaska Department of Environmental Conservation. *18 AAC 83. Alaska Pollutant Discharge Elimination System Program*. As amended Through October 23, 2008.
8. Alaska Department of Environmental Conservation. 18 ACC 72. Wastewater Disposal, as amended through December 23, 2009.
9. Alaska Department of Environmental Conservation. *Interim Antidegradation Implementation Methods*. Division of Water. Policy and Procedure No. 05.03.103. July 14, 2010.
10. U.S. EPA, *Technical Support Document for Water Quality-based Toxics Control*. Office of Water, EPA/505/2-90-001, PB91-127415. Washington D.C., March 1991.
11. U.S. EPA, *Interim Guidance for Performance-Based Reduction of NPDES Monitoring Frequencies*. Office of Water, EPA 833-B-96-001, Washington D.C., April 1998.

APPENDIX A. FIGURES

Figure A-1:

Figure A-2: Water Balance Diagram

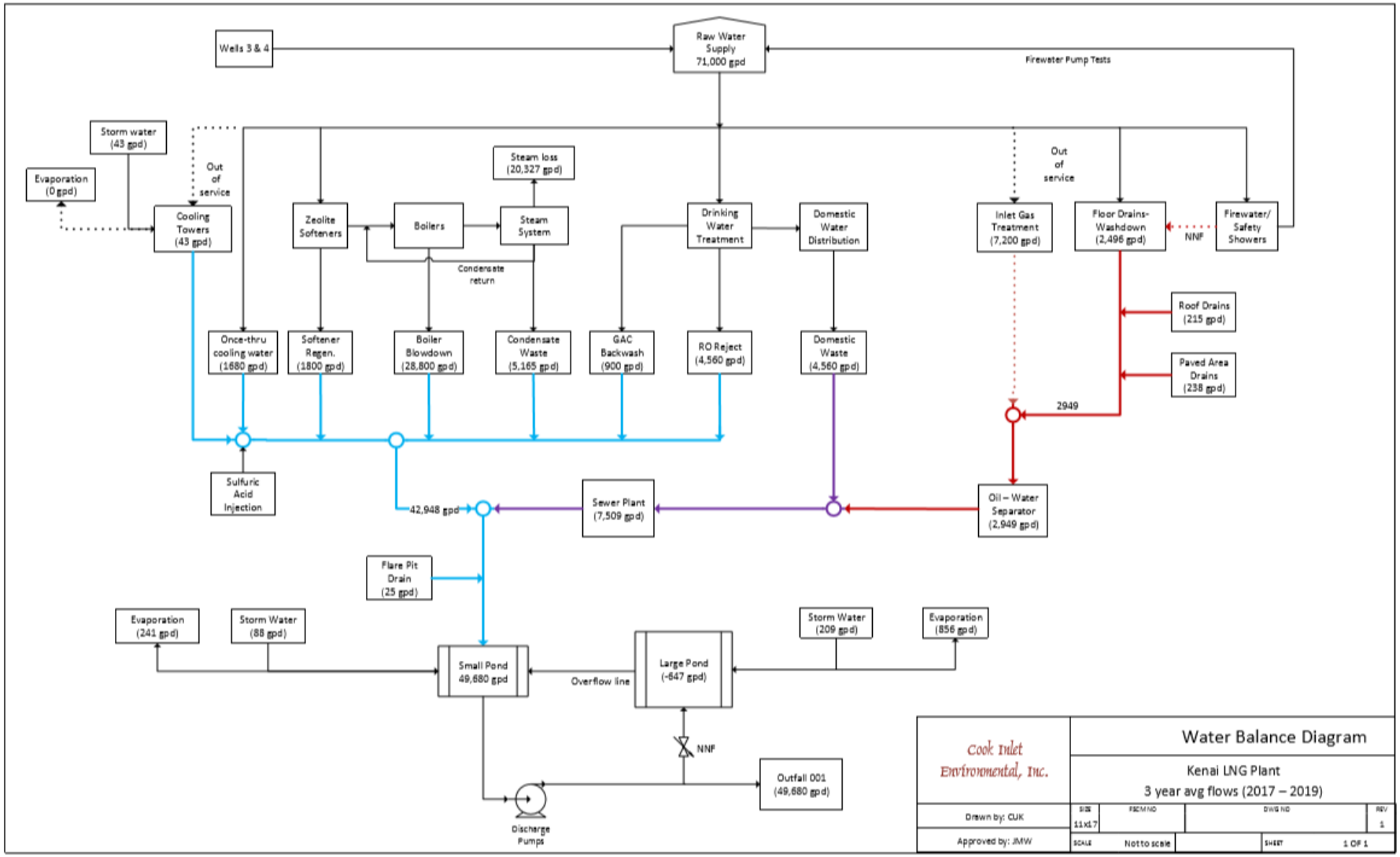

Figure A-3: Outfall Location

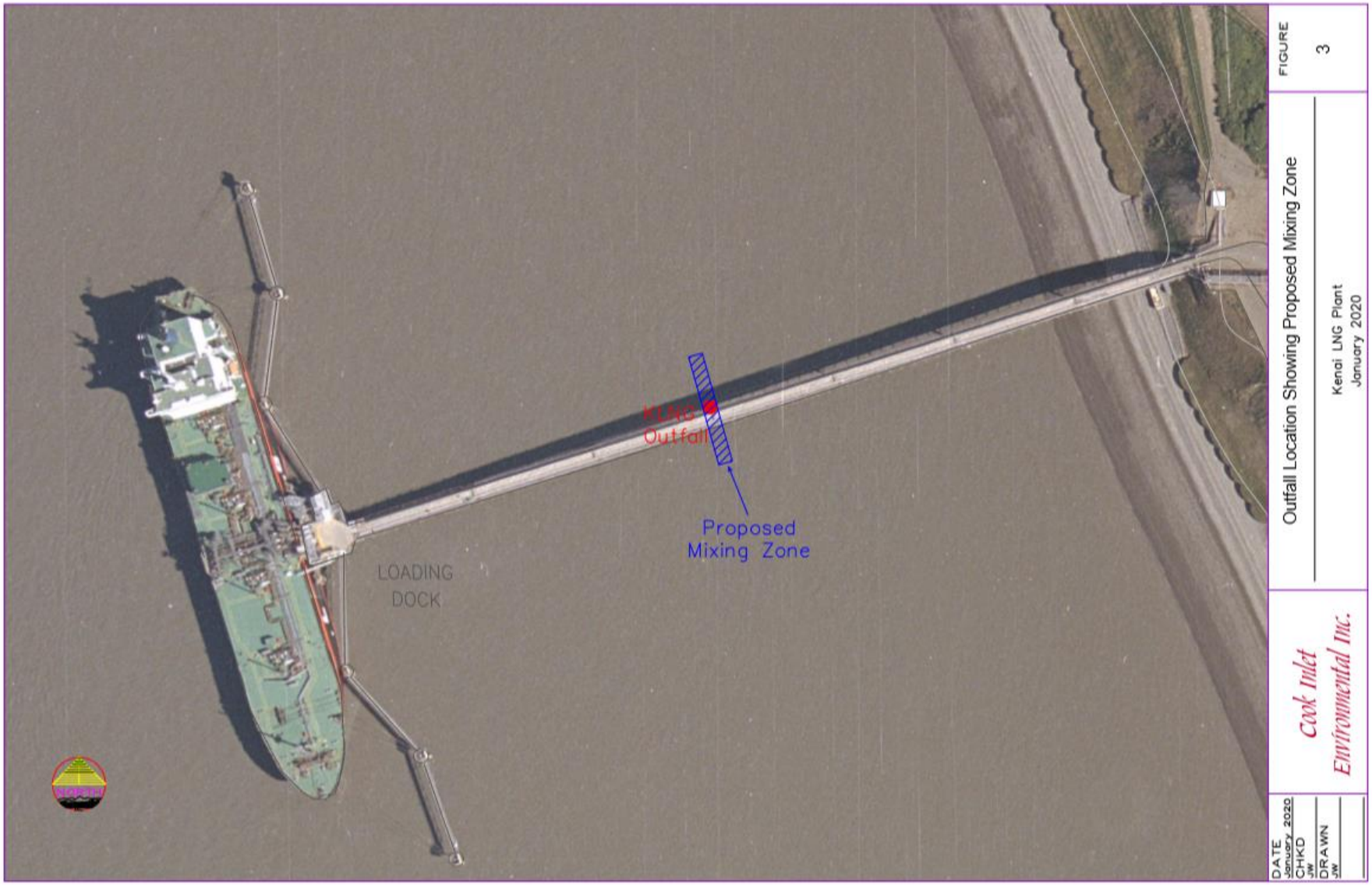

APPENDIX B. BASIS FOR EFFLUENT LIMITATIONS

Per Alaska Administrative Code (AAC) 18 AAC 83.015, the Alaska Department of Environmental Conservation (Department or DEC) prohibits the discharge of pollutants to waters of the United States in Alaska without first obtaining a permit issued by the Alaska Pollutant Discharge Elimination System (APDES) Program that meets the purposes of Alaska Statute (AS) 46.03 and is in accordance with Clean Water Act (CWA) Section 402. Per these statutory and regulatory requirements, Individual Permit AK0001155 - Kenai Liquefied Natural Gas (LNG) LLC, Kenai LNG Plant (Permit) includes effluent limitations that require the discharger to (1) meet standards reflecting levels of technological capability, (2) comply with 18 AAC 70 – Alaska Water Quality Standards (WQS), and (3) comply with other state requirements that may be more stringent.

The CWA requires that the limits for each pollutant discharge parameter be the more stringent of either technology-based effluent limits (TBELs) or water quality-based effluent limits (WQBELs). TBELs are set via rule makings by the Environmental Protection Agency (EPA) in the form of Effluent Limitation Guidelines (ELGs) that correspond to the level of treatment that is achievable for a given industry using available technology. In situations where ELGs have not been developed, or have not considered specific discharges or pollutants, a regulatory agency can develop TBELs using best professional judgment (BPJ) on a case-by-case basis. A WQBEL is designed to ensure that WQS are maintained and the waterbody as a whole is protected. In cases where both TBELs and WQBELs have been generated for a particular parameter, the more stringent of the two limits will be selected as the final Permit limit for the parameter.

B.1 TECHNOLOGY BASED EFFLUENT LIMITS

The Kenai LNG Plant (plant) discharges comingled non-domestic and domestic wastewater. The 2015 Permit was the first permit issued under the APDES Program and specified concentration based WQBELs per 18 AAC 83.435 and required monitoring of other water quality parameters to more accurately monitor the discharge under varying flow conditions and provide data for future Department decisions. The development of the TBELs and WQBELs in the Permit are summarized in the sections that follow.

B.1.1 Non-Domestic Wastewater TBELS

To evaluate the non-domestic components in the discharge, specifically oil and grease, DEC developed TBELs on a case-by-case basis in the 2015 Permit citing the ELGs in 40 CFR 419 Petroleum Refinery Point Source Category. The 2015 Permit specifies a maximum daily limit (MDL) of 10 mg/L and an average monthly limit (AML) of 5 mg/L; whereas, Section 419.12(e)(2) establishes an instantaneous maximum limit of 15 mg/L. The more stringent TBEL in the 2015 Permit was evaluated using data collected during the term of the permit, which demonstrated these TBELs are attainable and appropriate (See Fact Sheet Section 2.3). Therefore, the oil and grease limits established using case-by-case BPJ are retained in the Permit.

B.1.2 Domestic Wastewater Secondary Treatment TBELs

The 2015 Permit also adopted TBELs developed using case-by-case BPJ for domestic wastewater per 18 AAC 72 Wastewater Disposal for five-day biochemical oxygen demand (BOD5) and total suspended solids (TSS). Per 18 AAC 72.990(59) definitions for secondary levels of treatment, the AML/MDL for both BOD5 and TSS must meet 30/60 mg/L. Upon review of the data for BOD5 and TSS during the term of the 2015 Permit, DEC has determined these TBELs developed using case-by-case BPJ are attainable and are being retained in the Permit.

B.2 WATER QUALITY-BASED EFFLUENT LIMITATIONS

B.2.1 Statutory and Regulatory Basis

Per 18 AAC 70.010, a person may not conduct an operation that causes, or contributes to, a violation of the Alaska WQS. Per 18 AAC 83.435(a), an APDES permit must include conditions to meet any applicable requirement in addition to or more stringent than promulgated ELGs or TBELs developed using case-by-case BPJ. When evaluating if WQBELs are needed in addition to TBELs, DEC conducts a reasonable potential analysis (RPA) on the parameters of concern (POCs) which were identified during the effluent characterization process (See Fact Sheet Section 2.3). POCs are effluent parameters DEC considers to have a possibility to exceed, or contribute to an exceedance of, water quality criteria at the point of discharge or at the boundary of a mixing zone, if authorized. If a mixing zone is authorized, DEC must consider the dilution available in the authorized mixing zone in the RPA. Per 18 AAC 83.435(c), DEC must also use procedures that account for effluent variability (e.g., maximum expected concentrations and coefficient of variation), existing controls on point source (e.g., treatment systems) and nonpoint sources of pollution (e.g., ambient receiving water concentrations).

B.2.2 Reasonable Potential Analysis

The Department developed and implemented a *Reasonable Potential Analysis and Effluent Limits Development Guide, June 30, 2014 (RPA&WQBEL Guide)* and associated spreadsheet tool. This *RPA&WQBEL Guide* and tool were used in development of the WQBELs in the Permit. The RPA procedure calculates maximum effluent concentrations (MECs) based on the 99th percentile at a 95 percent (%) confidence interval and projects the receiving water concentrations at the boundary of the mixing zones using mass balance to determine whether concentrations of POCs exceed, or contribute to exceedance(s), of water quality criteria at the mixing zone boundaries. The applicable water quality criteria is provided by WQS or the *Alaska Water Quality Criteria Manual for Toxics and Other Deleterious Organic and Inorganic Substances*, 2008 (*Toxics Manual*).

B.2.2.1 RPA Results

Based on the results of the effluent characterization, DEC conducted an RPA for Outfall 001 discharge parameters TRC and copper (see APPENDIX A) which identified TRC as the driving parameter for the acute mixing zone and copper as the driving parameter for the chronic mixing zone. Accordingly, the Permit will include WQBELs for each of these parameters as these driving parameters have reasonable potential to exceed, or contribute

to an exceedance, of the acute or chronic water quality criteria at the respective boundaries of the acute or chronic mixing zones.

B.2.3 Wasteload Allocations

In the context of this section, a wasteload allocation (WLA) is the concentration of a pollutant that can be discharged to the receiving water and comply with the acute (a) or chronic (c) water quality criteria ($WQC_{a,c}$) when accounting for ambient receiving water concentrations (AWC) and authorized acute or chronic dilution factors ($DF_{a,c}$) in the mixing zones, if applicable.

For discharges where information on ambient receiving water concentrations is available, DEC calculates the AWC as the 85th percentile of the applicable ambient data set. In situations where data is not available but the parameter is likely to be present in the receiving water, DEC uses 15 % of the applicable water quality criteria. For cases where a parameter is not anticipated to be present in the ambient receiving water, DEC may assume a concentration of zero.

The 2015 Permit required receiving water data collection for copper. Therefore, DEC used the 85th percentile of the copper data in the receiving waters but assumed an ambient concentration of zero for TRC. Because water quality criteria for metals are provided as dissolved and limits are required to be reported as total recoverable, conversions using metals translators in *Toxics Manual, Appendix B – Conversion Factors for Saltwater Dissolved Metals Criteria* were applied as necessary. The WLA is calculated by rearranging Equation B-3 in Appendix B and substituting WQC for receiving water concentration and WLA for the maximum expected concentration. The resulting mass balance equation is:

$$WLA_{a,c} = DF_{a,c}(WQC_{a,c} - AWC) + AWC$$

B.2.3.1 WLAs for TRC

For TRC, the inputs for the WLA equation are shown below:

- $DF_a = 53$
- $DF_c = 106$
- $WQC_a = 13.0$ µg/L total concentration
- $WQC_c = 7.5$ µg/L total concentration
- AWC = 0 µg/L based on assumption of not being present in the receiving waters

Inputting the above values into the equation results in the following WLAs for TRC:

$WLA_a = 689$ µg/L

$WLA_c = 795$ µg/L

B.2.3.2 WLAs for Copper

For copper, the inputs for the WLA equation are shown below:

- $DF_a = 53$
- $DF_c = 106$

- WQC_a = 5.78 µg/L total concentration
- WQC_c = 3.73 µg/L total concentration
- AWC = 1.84 µg/L based the 85th percentile of the ambient concentration

Inputting the above values into the WLA equation results in the following WLA for copper in the chronic mixing zone:

WLA_a = 210.7 µg/L

WLA_c = 202.2 µg/L

B.2.4 Long-Term Averages (LTAs)

LTA_a and LTA_c concentrations are calculated from the acute and chronic WLAs using the following equations:

$$LTA_a = WLA_a * e^{(0.5\sigma^2 - z\sigma)}$$

where,

$$\sigma^2 = \ln(CV^2 + 1)$$

z = 2.326 for 99th percentile probability basis

$$CV = coefficient\ of\ variation = \frac{standard\ deviation}{mean}$$

$$LTA_c = WLA_c * e^{(0.5\sigma^2 - z\sigma)}$$

where,

$$\sigma^2 = \ln\left(\frac{CV^2}{4} + 1\right)$$

z = 2.326 for 99th percentile probability basis

$$CV = coefficitent\ of\ variation = \frac{standard\ deviation}{mean}$$

B.2.4.1 LTAs and Limits for TRC

<u>Calculations</u>

Determine Long Term Averages (LTAs)

The LTAs acute (a) and chronic (c) exposure were calculated as follows:

$LTA_a = WLA\ [\exp(0.5\sigma^2 - Z_{99}\sigma)]$, where $\sigma^2 = \ln(CV^2 + 1)$

WLA_a = 689 µg/L, CV = 1.039, Z_{99} = 2.326, and $\sigma^2 = 0.7322$

LTA_a = 135.8 µg/L

$LTA_c = WLA_c\ [\exp(0.5\sigma_4^2 - Z_{99}\sigma_4)]$, where $\sigma_4^2 = \ln(CV^2/4 + 1)$

WLA_c = 795 µg/l, CV = 1.039, Z_{99} = 2.326,and $\sigma_4^2 = 0.2389$

LTA_c = 287.4 μg/L

Determine the most limiting (lowest) LTA

LTA_a is most limiting = 135.8 μg/L

Calculate the MDL and AML

$MDL = LTA_a [\exp(Z_{99}\sigma - 0.5\sigma^2)]$, where $\sigma^2 = \ln(CV^2 + 1)$

$CV = 1.039$, $Z_{99} = 2.326$, and $\sigma^2 = 0.7321$

MDL_{TRC} = 689 μg/L

<u>Use 690 μg/L</u>

$AML = LTA_a [\exp(Z_{95}\sigma_4 - 0.5\sigma_4^2)]$, where $\sigma_4^2 = \ln(CV^2/4 + 1)$,

$CV = 1.039$, $Z_{95} = 1.645$, and $\sigma_4^2 = 0.2389$

AML_{TRC} = 269 μg/L

<u>Use 270 μg/L</u>

B.2.4.2 LTAs and Limits for Copper

<u>Calculations</u>

Determine Long Term Averages (LTAs)

The LTAs acute (a) and chronic (c) exposure were calculated as follows:

$LTA_a = WLA [\exp(0.5\sigma^2 - Z_{99}\sigma)]$, where $\sigma^2 = \ln(CV^2 + 1)$

WLA_a = 210.6 μg/L, CV = 0.687, $Z_{99} = 2.326$, and $\sigma^2 = 0.3862$

LTA_a = 60.2 μg/L

$LTA_c = WLA_c [\exp(0.5\sigma_4^2 - Z_{99}\sigma_4)]$, where $\sigma_4^2 = \ln(CV^2/4 + 1)$

WLA_c = 196.5 μg/l, CV = 0.687, $Z_{99} = 2.326$, and $\sigma_4^2 = 0.1114$

LTA_c = 98.4 μg/L

Determine the most limiting (lowest) LTA

LTA_a is most limiting = 60.2 μg/L

Calculate the MDL and AML

$MDL = LTA_a [\exp(Z_{99}\sigma - 0.5\sigma^2)]$, where $\sigma^2 = \ln(CV^2 + 1)$

$CV = 0.687$, $Z_{99} = 2.326$, and $\sigma^2 = 0.3862$

MDL_{Cu} = 210.7 μg/L

<u>Use 211 μg/L</u>

$AML = LTA_a\ [\exp(Z_{95}\sigma_4 - 0.5\sigma_4^2)]$, where $\sigma_4^2 = \ln(CV^2/4 + 1)$,

$CV = 0.687$, $Z_{95} = 1.645$, and $\sigma_4^2 = 0.1114$

AML_{Cu} = 98.6 µg/L

<u>Use 99 µg/L</u>

APPENDIX C. REASONABLE POTENTIAL ANALYSIS

This Appendix summarizes the reasonable potential analysis (RPA) procedure used by the Alaska Department of Environmental Conservation (Department or DEC) to determine if development of water quality-based effluent limits (WQBELs) are necessary for individual permit AK0001155 - Kenai Liquefied Natural Gas (LNG), LLC, Kenai LNG Plant (Permit).

Per Alaska Administrative Code (AAC) 18 AAC 83 - Alaska Pollutant Discharge Elimination System (APDES) Program, limits are required in APDES permits to achieve water quality standards established under 33 U.S.C. 1313, including state narrative criteria for water quality. Per 18 AAC 83.435(b), "Effluent limits in a permit must control all pollutants or pollutant parameters, either conventional, non-conventional, or toxic pollutants, that the Department determines are or may be discharged at a level that will cause, have the reasonable potential to cause, or contribute to an excursion above any State water quality standard (i.e., criteria), including state narrative criteria for water quality." Alaska water quality criteria are established in 18 AAC 70 – Water Quality Standards (WQS) and the *Alaska Water Quality Criteria Manual for Toxic and Other Deleterious Organic and Inorganic Substances, 2008 (Toxics Manual).*

After screening parameters in Fact Sheet Section 2.3, DEC analyzes parameters of concern (POCs) in the discharge to determine if they will cause, or contribute to, an exceedance of water quality criteria per the RPA procedures described in the *Alaska Pollutant Discharge Elimination System (APDES) Permits Reasonable Analysis and Effluent Limits Development Guide, June 30, 2014* (*RPA&WQBEL Guide*) and the associated spreadsheet tool. The *RPA&WQBEL Guide* and spreadsheet tool are based partly on procedures in the Environmental Protection Agency (EPA) *Technical Support Document for Water Quality-Based Toxics Control, 1991 (TSD)* that were modified by the Department.

The spreadsheet calculates the reasonable potential of a discharge of effluent containing a maximum expected concentration (MEC) of a parameter by comparing the projected receiving water concentration at the boundary of the authorized acute or chronic mixing zones to the applicable water quality criteria for that parameter. Reasonable potential exists if the projected receiving waterbody concentration (RWC) at the boundary of the respective mixing zone exceeds the applicable criteria for that parameter. If reasonable potential exists, a WQBEL must be included in the Permit per 18 AAC 83.435. The RPA procedures used by DEC are summarized in subsequent Appendix Sections C.1 and C.2 followed by example calculations specific to plant wastewater discharges.

The evaluation by the applicant indicated total residual chlorine (TRC) was the driving parameter to size both the acute and chronic mixing zones based on the results of RPA calculations. Whereas, the independent evaluation by DEC indicated TRC as the driving parameter for the acute MZ and copper for the chronic MZ based on the following calculations by DEC. The differing driving parameter determinations occurred because DEC used data for ambient concentration from multiple sources and different statistical outcomes for effluent data in the RPA.

C.1 Mass Balance

For discharge of a parameter at the MEC into a marine receiving environment with a known ambient receiving water concentration (AWC), the projected receiving waterbody concentration

(RWC) is determined using a steady state model represented by the following mass balance equation:

$$(V_{MEC} + V_{AWC})RWC = V_{MEC}MEC + V_{AWC}AWC \qquad \text{(Equation C-1)}$$

where,

RWC = Receiving waterbody concentration downstream of the effluent discharge.

MEC = Maximum projected effluent concentration.

AWC = Ambient receiving water concentration, taken as the 85th percentile of data or 15 percent of the chronic criteria if no ambient data is available. The AWC for zinc was calculated based on 15 percent of the chronic criteria.

V_{MEC} = Volume of the maximum expected effluent discharged into the control volume.

V_{AWC} = Volume of the ambient receiving water in the control volume.

The dilution factor for a discharge to meet water quality criteria at the boundary of a mixing zone is defined as:

Dilution Factor (DF), $DF = \frac{(V_{MEC}+V_{AWC})}{V_{MEC}}$ (Equation C-2)

Upon separating variables in Equation C-1, substituting Equation C-2, and rearranging yields:

$$DF = \frac{(MEC-AWC)}{(RWC-AWC)} \qquad \text{(Equation C-3)}$$

Rearranging Equation C-3 to solve for RWC yields:

$$RWC = \frac{(MEC-AWC)}{DF} + AWC \qquad \text{(Equation C-4)}$$

For known MEC and AWC, Equation C-3 can be used to determine the required DF for a parameter by substituting water quality criteria for RWC. For cases where a DF and mixing zone have been authorized, Equation C-4 is rearranged to calculate the RWC at the boundary of the mixing zone in the RPA.

C.2 Maximum Projected Effluent Concentration

The spreadsheet tool calculates the MEC by applying a reasonable potential multiplier (RPM) based on a 99th percentile at a 95th confidence interval to the maximum observed concentration (MOC) for a parameter. In addition, DEC evaluates the distribution of the data set using the *ProUCL Statistical Software Program, Version 4.1 (ProUCL)* rather than assuming a lognormal distribution as described in parts of the TSD when calculating the coefficient of variation (CV). The possible statistical distributions include normal, lognormal, gamma, or non-parametric.

The RPM is calculated differently depending on the type of distribution, CV of the data, and the number of data points. When fewer than 10 valid data points are available, the TSD recommends using the assumption that the distribution is lognormal and the CV is equal to 0.6, a conservative estimate that assumes a relatively high variability. For data sets with 10 or more valid data points CV is defined as the ratio of the sample standard deviation of the data set to the sample mean.

$$CV = coefficient\ of\ variation = \frac{standard\ deviation}{mean},$$

For data sets with a normal or gamma distribution or analyzed with the nonparametric method (Kaplan-Meier):

$$CV = \frac{\hat{\sigma}_y}{\hat{\mu}_y} \qquad \text{(Equation C-5)}$$

Where: $\hat{\mu}_y = estimated\ mean = \frac{\sum[x_i]}{k}, 1 \leq i \leq k$

$\hat{\sigma}_y{}^2 = estimated\ variance = \sum \frac{[(x_i - \mu)^2]}{k-1}, 1 \leq i \leq k$

$\hat{\sigma}_y = estimated\ standard\ deviation = (\sigma^2)^{0.5}$

$k = number\ of\ samples$

For data sets with a Lognormal distribution:

$$CV = [\exp(\hat{\sigma}_y^2) - 1]^{0.5} \qquad \text{(Equation C-6)}$$

Where: $y_i = \ln(x_i)\ for\ i = 1,2, \ldots, k$

$\hat{\mu}_y = mean = \sum(y_i)/k$

$\hat{\sigma}_y^2 = variance = \sum[(y_i - \hat{\mu}_y)^2]/(k-1)$

$k = number\ of\ samples$

The RPM is the ratio of the upper bound of the distribution at the 99th percentile to the percentile represented by the MOC, at the 95% confidence level. The lognormal equations C-8 and C-9 are used as the input into Equation C-7 for lognormal distributions:

$$RPM = \frac{C_{99}}{C_{Pn}} \qquad \text{(Equation C-7)}$$

$$C_{99} = \exp[(Z_{99} * \hat{\sigma}_y) - (0.5 * \hat{\sigma}_y^2)] \qquad \text{(Equation C-8)}$$

$$C_{Pn} = \exp[(Z_{Pn} * \hat{\sigma}_y) - (0.5 * \hat{\sigma}_y^2)] \qquad \text{(Equation C-9)}$$

In the case when data are normal, gamma, or display no discernable distribution, Equations C-10 and C-11 are used as input into Equation C-7:

$$C_{99} = \hat{\mu}_n + Z_{99} * \hat{\sigma} \qquad \text{(Equation C-10)}$$

$$C_{Pn} = \hat{\mu}_n + Z_{Pn} * \hat{\sigma} \qquad \text{(Equation C-11)}$$

In all Equations C-9, C-11, and C-13, the percentile represented by the MOC is:

$$p_n = (1 - confidence\ level)^{1/n} \qquad \text{(Equation C-12)}$$

Where:

$$p_n = the\ percentile\ represented\ by\ the\ MOC$$

$$n = the\ number\ of\ samples$$

$$Confidence\ Level = 0.95\ for\ this\ analysis$$

In the event that the calculated RPM is less than one (1), the RPM value defaults to a value of one (1) per *RPA&WQBEL Guide*. The MEC is determined by multiplying the MOC by the RPM to derive the MEC:

$$MEC = (RPM) * (MOC) \qquad \text{(Equation C-13)}$$

Either the acute or chronic RWC at the boundary of an authorized mixing can be determined using the MEC calculated in Equation C-3 in Equation C-4. The receiving water concentrations at the boundary of the mixing zones are then calculated as follows:

$$\mathrm{RWC_{a,c}} = \frac{\mathrm{MEC} - \mathrm{AWC}}{\mathrm{DF_{a,c}}} + \mathrm{AWC} \qquad \text{(Equation C-14)}$$

Where:

$RWC_{a,c}$ = receiving water concentration at the boundary of the acute or chronic mixing zone,
AWC = ambient receiving water concentration, and
$DF_{a,c}$ = the authorized acute or chronic dilution factor.

If the RWC at either the acute or chronic mixing zone boundary is found to be greater than the respective criteria for the constituent, then reasonable potential is determined for that parameter and a WQBEL must be developed for that parameter.

C.3 Example Calculations

The effluent characterization in Fact Sheet Section 2.3 identified total residual chlorine (TRC) and copper as POCs that could potentially trigger reasonable potential and require WQBELs. Both parameters were analyzed for reasonable potential and TRC was identified as the driving parameter for the acute mixing zone and copper as the driving parameter for the chronic mixing zone. This section summarizes the analysis of these parameters as an example of the RPA calculation process.

C.1.1 TRC Calculations:

<u>Calculate RPM for TRC</u>

The characterization data for TRC consisted of 221 data points collected and an MOC of 630 µg/L. Analysis of the data in *ProUCL* identified a lognormal distribution and a CV of 1.039 based on a raw standard deviation of 80.98 µg/L and corresponding mean of 77.92 µg/L.

Accordingly, the RPM was calculated in the *RPA&WQBEL Guide* spreadsheet tool with the following inputs:

$Z_{99} = 2.326$
$CV = 1.039$
$\hat{\sigma} = \ln[CV^2 + 1]^{1/2} = 0.8557$ µg/L
$n = 221$
$p_{221} = (1 - 0.95)^{(1/221)} = 0.9865$
$Z_{P221} = 2.2125$ (calculated using spreadsheet equation "normsinv(p_n)"

RPM_{TRC} = [exp (2.326 x 0.8557 - 0.5 x 0.7321)] / [exp (2.2125 x 0.8557 - 0.5 x 0.7321)]

= 1.102

<u>Calculate MEC per equation C-13 using the following inputs:</u>

MEC = RPM x MOC

RPM = 1.102

MOC = 630 µg/L

MEC = 1.102 x 630 µg/L = 694.2 µg/L,

<u>Calculate required acute and chronic DFs per equation C-3</u>

$$DFa, c = \frac{(MEC - AWC)}{(RWC - AWC)}$$

AWC = 0 µg/L based on assumed absence of TRC in receiving waters

RWC_a = 13.0 µg/L based on acute water quality criteria for TRC

RWC_c = 7.5 µg/L based on chronic water quality criteria for TRC

DF_a = (694.2 µg/L – 0 µg/L)/(13.0 µg/L – 0 µg/L)

= 53.4 required (DEC authorizes 53)

DF_c = (694.2 µg/L – 0 µg/L)/(7.5 µg/L – 0 µg/L)

= 92.5 required (DEC authorizes 106 based on copper being the driving parameter for the chronic mixing zone as shown in Section C.1.2).

<u>Calculate acute and chronic RWC for TRC using the authorized $DF_{a,c}$ per equation C-14</u>

$$RWC_{a,c} = \frac{(MEC - AWC)}{DF_{a,c}} + AWC$$

$$RWC_a = \frac{694.2 \text{ ug/L} - 0 \text{ ug/L}}{53} + 0 \text{ ug/L} = 13.1 \text{ µg/L}$$

$$RWC_c = \frac{694.2 \text{ ug/L} - 0 \text{ ug/L}}{106} + 0 \text{ ug/L} = 6.55 \text{ µg/L}$$

In order to determine if reasonable potential exists for the discharge to violate water quality criteria, the highest projected concentrations at the boundaries of the acute and chronic the mixing zones are compared with the respective acute or chronic criteria. As shown in the comparison

below, TRC has reasonable potential to violate applicable water quality criteria at the boundaries of the acute mixing zone but not the chronic mixing zone.

Acute	13.1 μg/L > 13.0 μg/L (acute criteria)	**YES**, there is reasonable potential for TRC to violate
Chronic:	6.55 μg/L < 7.5 μg/L (chronic criteria)	**NO**, there is not reasonable potential for TRC to violate

Since there is a reasonable potential for TRC in the effluent to cause, or contribute to, an exceedance of acute water quality criteria, a WQBEL for total TRC is required. See Appendix B for development of this limit.

C.1.2 Copper Calculations:

Calculate RPM for Copper:

The characterization data for copper consisted of 50 data points collected and an MOC of 127 μg/L. Analysis of the data in *ProUCL* identified a lognormal distribution and a CV of 0.6865 based on a inputted standard deviation of 26.37 μg/L and corresponding mean of 39.68 μg/L.

Accordingly, the RPM was calculated with the following inputs:

$Z_{99} = 2.326$
$CV = 0.6865$
$\hat{\sigma} = \ln[CV^2 + 1]^{1/2} = 0.6214$ μg/L
$n = 50$
$p_{50} = (1 - 0.95)^{(1/50)} = 0.9418$
$Z_{P50} = 1.570$ (calculated using spreadsheet "normsinv(p_n) function"

RPM_{Cu} = [exp (2.326 x 0.6214 - 0.5 x 0.3861)] / [exp (1.570 x 0.6214 - 0.5 x 0.3861)]
= 1.60

Calculate MEC for Cu per equation C-13 using the following inputs:

MEC = RPM x MOC

RPM = 1.6

MOC = 127 μg/L

MEC = 1.6 x 127 μg/L = 203 μg/L,

Calculate required acute and chronic DFs per equation C-3

$$DFa, c = \frac{(MEC - AWC)}{(RWC - AWC)}$$

AWC = 1.84 μg/L based on the 85th percentile of the ambient receiving water water data for Copper

RWC_a = 5.78 μg/L based on acute water quality criteria for copper converted to total recoverable units.

RWC_c = 3.73 μg/L based on chronic water quality criteria for Cu converted to total recoverable units.

DF_a = (203 µg/L –1.84 µg/L)/(5.78 µg/L – 1.84 µg/L)

= 51.1 required (DEC authorized 53 previously for TRC in C.1.1)

DF_c = (203 µg/L – 1.84 µg/L)/(3.73 µg/L – 1.84 µg/L)

= 106.4 required (DEC authorizes 106)

Calculate acute and chronic RWC for Cu using the authorized $DF_{a,c}$ per equation C-14

$$RWC_{a,c} = \frac{(MEC - AWC)}{DF_{a,c}} + AWC$$

$$RWC_a = \frac{203\ ug/L - 1.84\ ug/L}{53} + 1.84 ug/L = 5.64\ \mu g/L$$

$$RWC_c = \frac{203\ ug/L - 1.84\ ug/L}{106} + 1.84\ ug/L = 3.74\ \mu g/L$$

In order to determine if reasonable potential exists for the discharge to violate water quality criteria, the highest projected concentrations at the boundaries of the acute and chronic the mixing zones are compared with the respective acute or chronic criteria. As shown in the comparison below, copper has reasonable potential to violate applicable water quality criteria at the boundaries of the chronic mixing zone but not the acute mixing zone.

Acute:	5.64 µg/L < 5.78 µg/L (acute criteria)	**No**, there is not reasonable potential for Cu to violate
Chronic:	3.74 µg/L > 3.73 µg/L (chronic criteria)	**YES**, there is reasonable potential for Cu to violate

Since there is a reasonable potential for copper in the effluent to cause, or contribute to, an exceedance of chronic water quality criteria, a WQBEL for total copper is required. See Appendix B for development of this limit.

C.3 Outfall 001 Reasonable Potential Analysis Summary

Table C. 1 summarizes the results of the RPA for Outfall 001 POCs TRC and copper.

Table C. 1 Outfall 001 Reasonable Potential Summary

POC (Units)	MOC	n	AWC	CV	RPM	MEC	Water Quality Criteria		RWC		Reasonable Potential
							Acute	Chronic	Acute	Chronic	
TRC (ug/L)	630	221	0	1.039	1.1	694	13.0	7.5	**13.1**	6.55	**Yes (Acute)**
Copper (ug/L)	127	50	1.84	0.687	1.6	203	5.78	3.73	5.64	**3.74**	**Yes (Chronic)**

Appendix D MIXING ZONE ANALYSIS CHECKLIST

Mixing Zone Authorization Checklist

based on Alaska Water Quality Standards (2006)

The purpose of the Mixing Zone Checklist is to guide the permit writer through the mixing zone regulatory requirements to determine if all the mixing zone criteria presented in the Alaska Administrative Code (AAC) at 18 AAC 70.240 are satisfied, as well as provide justification to authorize a mixing zone in an Alaska Pollution Discharge Elimination System permit. In order to authorize a mixing zone, all criteria must be met. The permit writer must document all conclusions in the permit Fact Sheet. However, if the permit writer determines that one criterion cannot be met, then a mixing zone is prohibited, and the permit writer need not include in the Fact Sheet the conclusions for when other criteria were met.

Criteria	Description	Resources	Regulation	Mixing Zone Approved Y/N
Size	Is the mixing zone as small as practicable? - Applicant collects and submits water quality ambient data for the discharge and receiving waterbody (e.g. flow and flushing rates)	Yes •Technical Support Document for Water Quality Based Toxics Control •Water Quality Standards Handbook • DEC's RPA Guidance • EPA Permit Writers' Manual Fact Sheet Sections 3.3.2 and 3.3.3	18 AAC 70.240 (k)	Y

Criteria	Description	Resources	Regulation	Mixing Zone Approved Y/N
Technology	Were the most effective technological and economical methods used to disperse, treat, remove, and reduce pollutants? **If yes**, describe methods used in Fact Sheet Mixing Zone Analysis. Attach additional documents if necessary.	Yes Fact Sheet Section 3.3.4	18 AAC 70.240 (c)(1)	Y
Low Flow Design	**For river, streams, and other flowing fresh waters.** - Determine low flow calculations or documentation for the applicable parameters. Justify in Fact Sheet	N/A – Marine Discharge	18 AAC 70.240(l)	
Existing use	Does the mixing zone…			
	(1) partially or completely eliminate an existing use of the waterbody outside the mixing zone? **If yes, mixing zone prohibited.**	No Fact Sheet Section 3.3.5	18 AAC 70.240(c)(2)	Y
	(2) impair overall biological integrity of the waterbody? **If yes, mixing zone prohibited.**	No Fact Sheet Section 3.3.5	18 AAC 70.240(c)(3)	Y
	(3) provide for adequate flushing of the waterbody to ensure full protection of uses of the waterbody outside the proposed mixing zone? **If no, then mixing zone prohibited.**	Yes Fact Sheet Section 3.3.5	18 AAC 70.240(b)(1)	Y

Criteria	Description	Resources	Regulation	Mixing Zone Approved Y/N
	(4) cause an environmental effect or damage to the ecosystem that the Department considers to be so adverse that a mixing zone is not appropriate? **If yes, then mixing zone prohibited.**	No Fact Sheet Section 3.3.5, 3.3.9, and 3.3.10	18 AAC 70.240(m)	Y
Human consumption	Does the mixing zone…			
	(1) produce objectionable color, taste, or odor in aquatic resources harvested for human consumption? **If yes, mixing zone may be reduced in size or prohibited.**	No Fact Sheet Section 3.3.6	18 AAC 70.240(d)(6)	Y
	(2) preclude or limit established processing activities of commercial, sport, personal use, or subsistence shellfish harvesting? **If yes, mixing zone may be reduced in size or prohibited.**	No Fact Sheet Section 3.3.6	18 AAC 70.240(c)(4)(C)	Y
Spawning Areas	Does the mixing zone…			
	(1) discharge in a spawning area for anadromous fish or Arctic grayling, northern pike, rainbow trout, lake trout, brook trout, cutthroat trout, whitefish, sheefish, Arctic char (Dolly Varden), burbot, and landlocked coho, king, and sockeye salmon? **If yes, mixing zone prohibited.**	No Fact Sheet Section 3.3.7	18 AAC 70.240 (e) and (f)	Y

Criteria	Description	Resources	Regulation	Mixing Zone Approved Y/N
Human Health	Does the mixing zone…			
	(1) contain bioaccumulating, bioconcentrating, or persistent chemical above natural or significantly adverse levels? **If yes, mixing zone prohibited.**	No Fact Sheet Section 3.3.8	18 AAC 70.240 (d)(1)	Y
	(2) contain chemicals expected to cause carcinogenic, mutagenic, tetragenic, or otherwise harmful effects to human health? **If yes, mixing zone prohibited.**	No Fact Sheet Section 3.3.8	18 AAC 70.240 (d)(2)	Y
	(3) Create a public health hazard through encroachment on water supply or through contact recreation? **If yes, mixing zone prohibited.**	No Fact Sheet Section 3.3.8	18 AAC 70.240(c)(4)(C)	Y
	(4) meet human health and aquatic life quality criteria at the boundary of the mixing zone? **If no, mixing zone prohibited.**	Yes Fact Sheet Section 3.3.8	18 AAC 70.240 (c),(4)(A)	Y
	(5) occur in a location where the Department determines that a public health hazard reasonably could be expected? **If yes, mixing zone prohibited.**	No Fact Sheet Section 3.3.8	18 AAC 70.240(c)(4)(B)	Y

Aquatic Life	Does the mixing zone…			
	(1) create a significant adverse effect to anadromous, resident, or shellfish spawning or rearing? **If yes, mixing zone prohibited.**	No Fact Sheet Section 3.3.	18 AAC 70.240(e) and (f)	Y
	(2) form a barrier to migratory species? **If yes, mixing zone prohibited.**	No Fact Sheet Section 3.3.9	18 AAC 70.240(c)(4)(G)	Y
	(3) fail to provide a zone of passage? **If yes, mixing zone prohibited.**	No Fact Sheet Section 3.3.9		Y
	(4) result in undesirable or nuisance aquatic life? **If yes, mixing zone prohibited.**	No Fact Sheet Section 3.3.9	18 AAC 70.240(d)(5)	Y
	(5) result in permanent or irreparable displacement of indigenous organisms? **If yes, mixing zone prohibited.**	No Fact Sheet Section 3.3.9	18 AAC 70.240(c)(4)(E)	Y
	(6) result in a reduction in fish or shellfish population levels? **If yes, mixing zone prohibited.**	No Fact Sheet Section 3.3.9	18 AAC 70.240(c)(4)(D)	Y
	(7) prevent lethality to passing organisms by reducing the size of the acute zone? **If yes, mixing zone prohibited.**	No Fact Sheet Section 3.3.3 and 3.3.9	18 AAC 70.240(d)(7)	Y
	(8) cause a toxic effect in the water column, sediments, or biota outside the boundaries of the mixing zone? **If yes, mixing zone prohibited.**	No Fact Sheet Section 3.3.9	18 AAC 70.240(c)(4)(A)	Y

Endangered Species	Are there threatened or endangered (T/E species) at the location of the mixing zone?If yes, are there likely to be adverse effects to T/E species based on comments received from United States Fish & Wildlife Service or National Oceanic & Atmospheric Administration. If yes, will conservation measures be included in the permit to avoid adverse effects? **If yes, explain conservation measures in Fact Sheet. If no, mixing zone prohibited.**	Fact Sheet Sections 3.3.10 and 8.1	Program Description, 6.4.1 #5 18 AAC 70.240(c)(4)(F)	Y