ALASKA POLLUTANT DISCHARGE ELIMINATION SYSTEM

PERMIT FACT SHEET – DRAFT

Individual Permit AK0055913 – Hilcorp Alaska, LLC, Tyonek Platform Supplemental Development Drilling

DEPARTMENT OF ENVIRONMENTAL CONSERVATION
Wastewater Discharge Authorization Program
555 Cordova Street
Anchorage, AK 99501

Public Comment Period Start Date: **May 25, 2021**
Public Comment Period Expiration Date: **June 25, 2021**

Technical Contact: Gerry Brown, PE
Alaska Department of Environmental Conservation
Division of Water
Wastewater Discharge Authorization Program
555 Cordova Street
Anchorage, AK 99501
(907) 269-4874
Fax: (907) 269-3487
Gerry.Brown@alaska.gov

Issuance of an Alaska Pollutant Discharge Elimination System (APDES) individual permit to:

HILCORP ALASKA, LLC

Provides authorization to discharge at the following approximate location:

Facility	Receiving Water	Latitude	Longitude
Tyonek Platform	Cook Inlet	61.076207	-150.950713

The Alaska Department of Environmental Conservation (the Department or DEC) is issuing APDES individual permit AK0055913 – HAK Alaska, LLC, Tyonek Platform Supplemental Development Drilling (Permit). The Permit authorizes and sets conditions on the discharge of pollutants from this facility to state waters. In order to ensure protection of water quality and human health, the Permit places limits on the types and amounts of pollutants that can be discharged from these operations and outlines best management practices to which these operations must adhere.

This fact sheet explains the nature of potential discharges from a mobile offshore drilling unit (MODU) while conducting production drilling at the Tyonek Platform in state waters in Cook Inlet and the development of the Permit including:

- information on public comment, public hearing, and appeal procedures
- a listing of proposed effluent limitations and other conditions
- technical material supporting the conditions in the Permit
- proposed monitoring requirements in the Permit

Public Comment

Persons wishing to comment on, or request a public hearing for the Draft Permit for this facility, may do so in writing by the expiration date of the public comment period.

Commenters are requested to submit a concise statement on the Permit condition(s) and the relevant facts upon which the comments are based. Commenters are encouraged to cite specific Permit requirements or conditions in their submittals.

A request for a public hearing must state the nature of the issues to be raised, as well as the requester's name, address, and telephone number. The Department will hold a public hearing whenever the Department finds, on the basis of requests, a significant degree of public interest in a draft permit. The Department may also hold a public hearing if a hearing might clarify one or more issues involved in a permit decision or for other good reason, in the Department's discretion. A public hearing will be held at the closest practicable location to the site of the operation. If the Department holds a public hearing, the Director will appoint a designee to preside at the hearing. The public may also submit written testimony in lieu of or in addition to providing oral testimony at the hearing. A hearing will be tape recorded. If there is sufficient public interest in a hearing, the comment period will be extended to allow time to public notice the hearing. Details about the time and location of the hearing will be provided in a separate notice.

All comments and requests for public hearings must be in writing and should be submitted to the Department at the technical contact address, fax, or email identified above (see also the public comments section of the attached public notice). Mailed comments and requests must be postmarked on or before the expiration date of the public comment period.

After the close of the public comment period and after a public hearing, if applicable, the Department will review the comments received on the Draft Permit. The Department will respond to the comments received in a Response to Comments document that will be made available to the public. If no substantive comments are received, the tentative conditions in the Draft Permit will become the proposed Final Permit.

The proposed Final Permit will be made publicly available for a five-day applicant review. The applicant may waive this review period. After the close of the proposed Final Permit review period, the Department will make a final decision regarding permit issuance. A Final Permit will become effective 30 days after the Department's decision, in accordance with the state's appeals process at 18 AAC 15.185.

The Department will transmit the Final Permit, Fact Sheet (amended as appropriate), and the Response to Comments to anyone who provided comments during the public comment period or who requested to be notified of the Department's final decision.

Appeals Process

The Department has both an informal review process and a formal administrative appeal process for final APDES permit decisions. An informal review request must be delivered within 20 days after receiving the Department's decision to the Director of Water at the following address:

Director, Division of Water
Alaska Department of Environmental Conservation
555 Cordova Street
Anchorage AK, 99501

Interested persons can review 18 AAC 15.185 for the procedures and substantive requirements regarding a request for an informal Department review. For information regarding informal review of Department decisions see http://dec.alaska.gov/commish/review-guidance/informal-reviews.

An adjudicatory hearing request must be delivered to the Commissioner of the Department within 30 days of the permit decision or a decision issued under the informal review process. An adjudicatory hearing will be conducted by an administrative law judge in the Office of Administrative Hearings within the Department of Administration. A written request for an adjudicatory hearing shall be delivered to the Commissioner at the following address:

Commissioner
Alaska Department of Environmental Conservation
P.O. Box 111800
Juneau AK, 99811-1800
Location: 410 Willoughby Street, Juneau

Interested persons can review 18 AAC 15.200 for the procedures and substantive requirements regarding a request for an adjudicatory hearing. See http://dec.alaska.gov/commish/review-guidance/adjudicatory-hearing-guidance for information regarding appeals of Department decisions.

Documents are Available

The permit, fact sheet, and related documents can be obtained by visiting or contacting DEC between 8:00 a.m. and 4:30 p.m. Monday through Friday at the addresses below. The permit, fact sheet, and other information are also located on the Department's Wastewater Discharge Authorization Program website: http://dec.alaska.gov/water/wastewater/.

Alaska Department of Environmental Conservation Division of Water Wastewater Discharge Authorization Program 555 Cordova Street Anchorage, AK 99501 (907) 269-6285	Alaska Department of Environmental Conservation Division of Water Wastewater Discharge Authorization Program 410 Willoughby Avenue Juneau AK, 99811-1800 (907) 465-5180
Alaska Department of Environmental Conservation Division of Water Wastewater Discharge Authorization Program 610 University Avenue Fairbanks, AK 99709-3643 (907) 451-2183	Alaska Department of Environmental Conservation Division of Water Wastewater Discharge Authorization Program 43335 Kalifornsky Beach Rd. - Suite 11 Soldotna, AK 99669 (907) 262-5210

TABLE OF CONTENTS

1 INTRODUCTION 7

1.1 Applicant 7
1.2 Authority 7

2 BACKGROUND 7

2.1 Project Description 7
2.2 Facility 8
2.3 Requested Discharges 9

3 WASTEWATER CHARACTERIZATION 9

3.1 Graywater (Discharge 004) 9
3.2 Blowout Preventer Fluid (Discharge 006) 10
3.3 Noncontact Cooling Water (Discharge 009) 11
3.4 Uncontaminated Ballast Water (Discharge 010) 11
3.5 Excess Cement Slurry (Discharge 012) 12
3.6 Summary of Requested Discharges and Volume Estimates 13

4 RECEIVING WATERS 14

4.1 Water Quality Standards 14
4.2 Water Quality Status of Receiving Water 14
4.3 Mixing Zone Analysis 15

4.3.1 Mixing Zone Modeling and Methodology 15
4.3.2 Mixing Zone Size Constraints 18
4.3.3 Technology 18
4.3.4 Existing Use 19
4.3.5 Human Consumption 19
4.3.6 Spawning Areas 19
4.3.7 Human Health 20
4.3.8 Aquatic Life and Wildlife 20
4.3.9 Endangered Species 20

4.4 Zone Of Deposit 20

5 EFFLUENT LIMIT DEVELOPMENT 21

5.1 Basis for Permit Effluent Limits 21
5.2 TBELs Based on ELGs 21

5.2.1 Graywater (Discharge 004) 22

5.3 TBELs based on Case-by-Case Best Professional Judgment 22

5.3.1 Total Residual Chlorine – Graywater (Discharge 004) 22
5.3.2 No free oil – Miscellaneous Discharges (006, 010, 012) 22

5.4 Water Quality-Based Effluent Limits 23
5.4.1 Oil and Grease (Visible Sheen) – Graywater (Discharge 004) 23
5.4.2 Oil and Grease (Visible Sheen) – Miscellaneous Discharges (006, 010, 012) 23
5.5 Most Stringent Limits Determination 23
5.6 Secondary Treatment Requirements and Waivers per 18 AAC 72 24
6 EFFLUENT LIMITS AND MONITORING REQUIREMENTS 24
6.1 Effluent Limits and Monitoring Requirements for Graywater (Discharge 004) 24
6.1.1 Flow 25
6.1.2 Floating Solids, Foam, and Garbage 25
6.1.3 Oil and Grease (Visible Sheen) 25
6.1.4 Total Residual Chlorine Maximum 25
6.1.5 Discharge Specific BMPs 25
6.2 Effluent Limits and Monitoring Requirements for Miscellaneous Discharges (006, 009, 010, 012) 26
6.2.1 Flow 26
6.2.2 Oil and Grease (Sheen) 26
6.2.3 Chemical Use Optimization and Inventory 26
6.2.4 Specific Pollution Reduction BMPs and BMP Revision Action Level 27
6.3 Chronic WET Monitoring Requirements 27
6.4 Additional Effluent Monitoring 28
6.5 Electronic Discharge Monitoring Reports 29
6.5.1 E-Reporting Rule - Phase I 29
6.5.2 E-Reporting Rule - Phase II (Other Reports) 29
7 ANTIBACKSLIDING 29
8 ANTIDEGRADATION 30
8.1 Legal Basis 30
8.2 Receiving Water Status, Tier Determination, and Analysis Requirements 30
8.3 Tier 1 Analysis of Existing Use Protection 31
8.4 Tier 2 Analysis for Lowering Water Quality 31
8.4.1 Scope of Tier 2 Analysis 31
8.4.2 Tier 2 Analysis 32
8.4.3 Antidegradation Analysis Conclusion 37
9 OTHER PERMIT CONDITIONS 37
9.1 Standard Permit Provisions 37
9.2 Quality Assurance Project Plan 37
9.3 Best Management Practices Plan 37
9.3.1 Specific BMP Requirements 38

9.4 Termination Notification 39

10 OTHER LEGAL REQUIREMENTS 39

10.1 Endangered Species Act 39
10.2 Essential Fish Habitat 40
10.3 Ocean Discharge Criteria Evaluation 41
10.4 Permit Expiration 41

11 REFERENCES 42

FIGURES

Figure 1: Permit Coverage Area 8

Figure 2: Graywater Treatment System 10

Figure 3: Flow Diagram of Miscellaneous Discharges 006, 009, 010, and 012 13

TABLES

Table 1: Summary of Spartan 151 Noncontact Cooling Water Temperature Data from 2018 11

Table 2: Summary of Excess Cement Slurry Discharges Between 2011 and 2018 12

Table 3: Requested Discharges and Estimated Volumes 14

Table 4: Summary of Basis of Limits per Discharge Category 24

Table 5: Effluent Limits and Monitoring Requirements for Graywater (Discharge 004) 25

Table 6: Effluent Limits and Monitoring for Miscellaneous Discharges (006, 009, 010 and 012) ... 26

1 INTRODUCTION

On March 2, 2021, the Alaska Department of Environmental Conservation (DEC or Department) received an Alaska Pollutant Discharge Elimination System (APDES) individual permit application from Hilcorp Alaska, LLC (HAK or applicant). The application included a request for the Department to develop an APDES individual permit to authorize discharges from an oil and gas mobile offshore drilling unit (MODU) operating at the Tyonek A Platform (Platform) in coastal waters of Cook Inlet. The Information contained in this fact sheet is based on the application and follow-up information requested by DEC.

1.1 Applicant

This fact sheet provides information on the APDES permit for the following entity:

Name of Facility:	Tyonek Platform Supplemental Production Drilling
APDES Permit Number:	AK0055913
Facility Location:	Latitude 61° 4' 34.3446", Longitude - 150° 57' 2.5668"
Mailing Address:	PO Box 244027, Anchorage, AK 99524-4027
Facility Contact:	Ms. Jessica Fisher

1.2 Authority

The National Pollutant Discharge Elimination System (NPDES) Program regulates the discharge of wastewater to the waters of the United States (U.S.). For waters of the U.S. under jurisdiction of the State of Alaska, the NPDES Program is administered by DEC as the APDES Program. Accordingly, DEC is the APDES permitting authority for regulating the discharges associated with AK0055913 – HAK Tyonek Platform Supplemental Development Drilling (Permit). This is the first issuance of the Permit.

Clean Water Act (CWA) Section 301(a) and 18 AAC 83.015 provide that the discharge of pollutants to waters of the U.S. is unlawful except in accordance with an APDES permit developed per 18 AAC 83.115 and 18 AAC 83.120. A violation of a condition contained in the Permit constitutes a violation of the CWA and subjects the permittee of the facility with the permitted discharge to the penalties specified in Alaska Statute (AS) 46.03.760 and AS 46.03.761.

2 BACKGROUND

2.1 Project Description

HAK proposes to conduct production drilling operations at the Tyonek Platform (Platform) in support of increasing oil and gas production. Proposed drilling activities and related discharges will be in the west side of Cook Inlet, approximately five and one half (5.5) miles offshore of the northeast corner of the Tyonek census area. The Platform is in the Upper Cook Inlet and is centrally located within the North Cook Inlet Unit (See Figure 1).

Figure 1: Permit Coverage Area

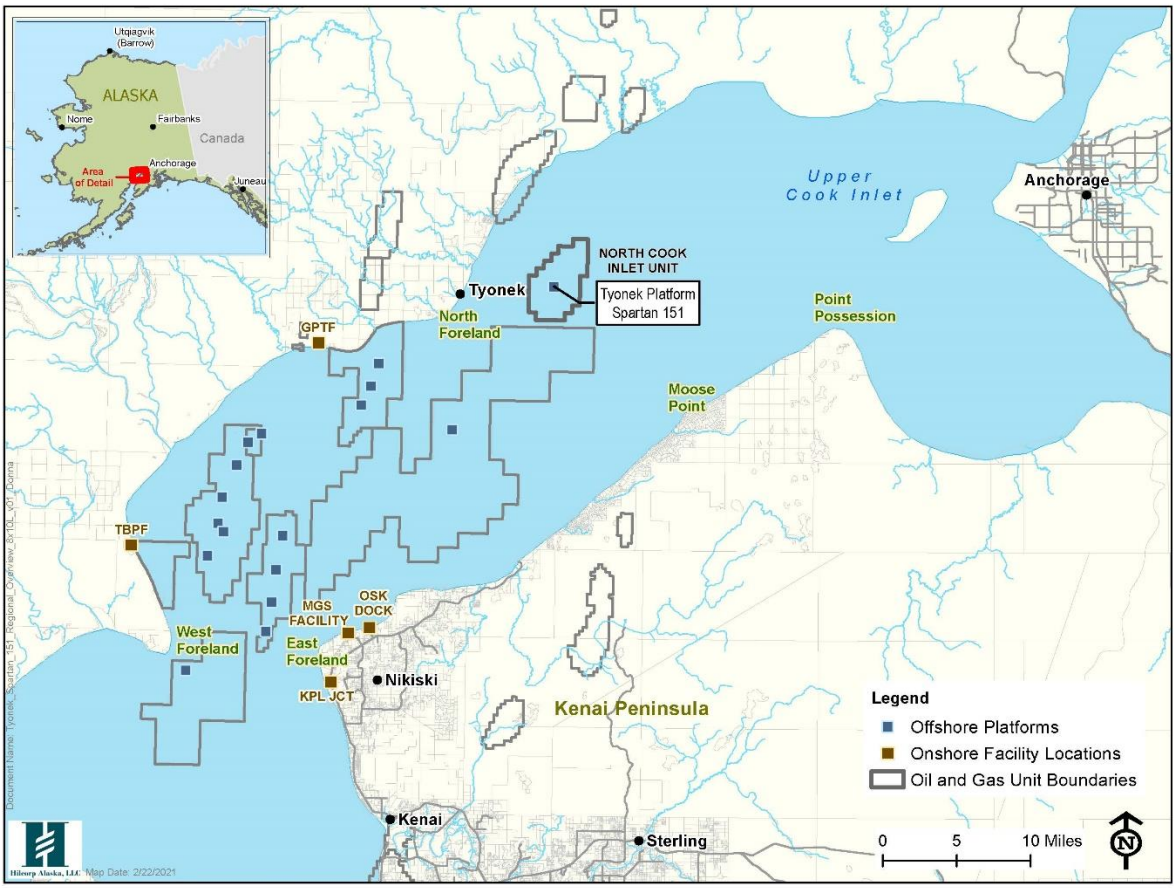

The Tyonek Platform Supplemental Development Drilling Project (Project) will involve moving the Spartan 151 MODU, or other similar MODU, to the site and cantilevering the MODU over the existing production platform. Since the Spartan 151 MODU will be physically located over the Platform, the associated discharges are considered to also be from the Platform and be applicable to the existing authorization (AKG315011) under the administratively extended general permit AKG-31-5000 – Oil and Gas Exploration, Development, and Production Facilities Located in State and Federal Waters in Cook Inlet (2007 GP). Four necessary discharges are not currently authorized for the Platform under general permit authorization AKG315011: blowout preventer fluid; noncontact cooling water; uncontaminated ballast water; and excess cement slurry. Although the Platform is authorized to discharge graywater under AKG315011, the Spartan 151 MODU will discharge graywater from a separate treatment unit, which requires a separate permit. These five wastewater discharges associated with the operation of the MODU require an individual APDES permit since reissuance of the 2007 GP has not been completed. The Permit is being expedited to support the Project anticipated to be completed during the 2021 drilling season.

2.2 Facility

The Spartan 151 MODU has been tentatively selected by HAK for the Platform Project. The Spartan 151 is a 150-foot (46 meters) long independent leg/cantilever jack-up MODU with three triangular 250-foot (76 meters) long truss-type legs, and is classified as A-1 Self-Elevating. The

Spartan 151 was designed and constructed by Bethlehem Steel Corporation in 1981 and was completely refurbished and upgraded in 2006. The operating non-hurricane conditions for the Spartan 151 is limited to a maximum water depth of 150 feet (46 meters) with a minimum water depth of 12 feet (4 meters) and wind speeds of 70 knots with wave heights to 35 feet (10 meters). The hurricane survival operating condition limits are a maximum water depth of 130 feet (40 meters) and wind speeds of up to 100 knots with wave heights up to 45 feet (14 meters). Although the Spartan 151 is tentatively selected for the Project, HAK may substitute a different MODU so long as the discharge characteristics are similar to that from the Spartan 151 as characterized in this fact sheet and application.

2.3 Requested Discharges

During the effective period of the Permit, the permittee requests authorization to discharge pollutants associated with oil and gas production drilling at the Platform located in Cook Inlet. The application submitted by HAK identifies those discharges and pollutants resulting from facility processes, waste streams, and operations that are requested to be authorized in the Permit. The following five wastewater discharges have been requested by HAK:

DISCHARGE NUMBER	DESCRIPTION
004	Graywater
006	Blowout Preventer Fluid
009	Noncontact Cooling Water
010	Uncontaminated Ballast Water
012	Excess Cement Slurry

3 WASTEWATER CHARACTERIZATION

Characterization of the discharges requested by the applicant are described in this section. Descriptions are structured to provide a general description first followed by specific information pertinent to discharges as described by the application process and authorized under the Permit.**Graywater (Discharge 004)**

Graywater includes wastewater from kitchens, showers, and laundry facilities. The parameters of concern are five-day biochemical oxygen demand (BOD_5), total suspended solids (TSS), total residual chlorine (TRC), and floating materials including solids, foam, garbage, and oily sheens. The Spartan 151 will generate graywater and black water, both considered domestic wastewater per 18 AAC 72. Black water will be containerized and transported to an appropriate onshore facility for treatment and disposal, but the applicant proposes to treat and discharge graywater under the Permit. Note that graywater is considered domestic wastewater and is held to the same treatment requirements by 18 AAC 72, unless a waiver for secondary treatment is requested and approved. Per 18 AAC 72.050-060 graywater must receive at least primary treatment prior to being discharged even if a waiver is granted from secondary standards. Primary treatment is defined as attaining 30 percent (%) reduction in BOD_5 and TSS per 18 AAC 72.990(50).

Graywater will be treated on board using OMNIPURE marine sanitation devices (MSDs) equipped with electrochemical oxidation/ disinfection, dechlorinating unit, and filtration prior to being discharged into Cook Inlet. The discharge flow rate is 3.64 gallons per minute (gpm) or 5,250 gallons per day (gpd) and the discharge port is approximately 40 feet (12 meters) above the water surface. The treatment of graywater using the MSDs on the Spartan 151 has been demonstrated to exceed primary treatment requirements, and the operator has successfully obtained a waiver to secondary treatment standards from DEC. Therefore, the discharge of treated graywater is eligible

for inclusion under the Permit. Because the MSDs include chlorination and dechlorination, the primary water quality POC is TRC and is included in the mixing zone analysis in Section 4.3. See Figure 2.

Figure 2: Graywater Treatment System

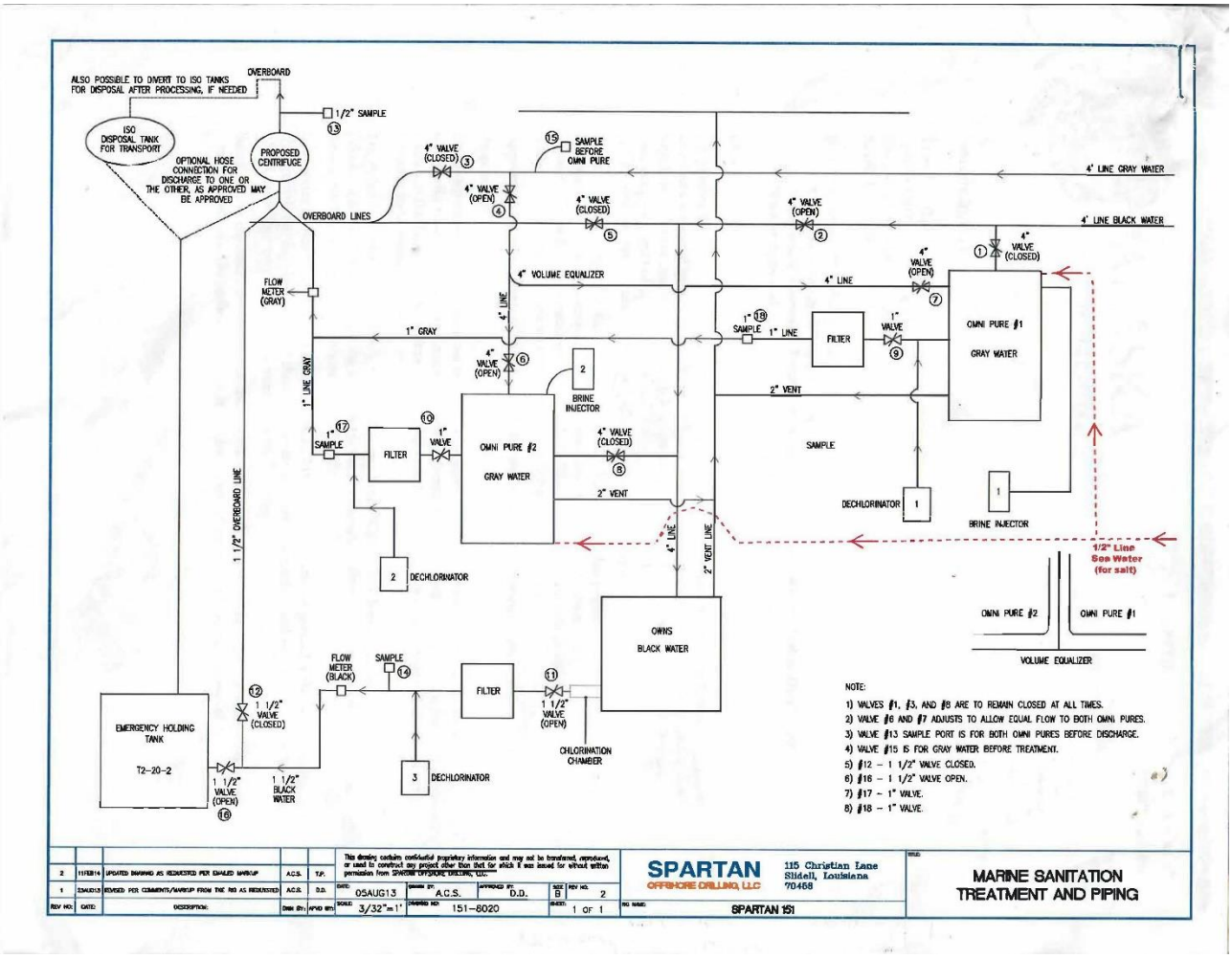

3.2 Blowout Preventer Fluid (Discharge 006)

A blowout preventer (BOP) is a device typically located below the seafloor designed to maintain the pressure in the well that cannot be controlled by other means, such as with drilling fluid alone. Fluid designed to operate with the blowout preventer may be discharged in small quantities (less than 42 bbl/well (1,684 gal/well) or approximately 7 bbl (294 gal) per testing event) when the blowout preventer is actuated on the hydraulic equipment. The design of the blowout preventer is such that the fluid used to open it after it has been closed for testing must be forced through the system and discharged into surrounding receiving water at the unit itself. However, new-style units can discharge into the annulus between the drill pipe and borehole. Testing of the blowout preventer device must be conducted periodically (typically on a weekly basis), resulting in intermittent discharges. Drill rigs operating in Cook Inlet routinely test BOP equipment biweekly in accordance with American Petroleum Institute (API) Recommended Practice No. 53 and Alaska Oil and Gas Conservation Commission (AOGCC) requirements. The primary constituents of blowout preventer fluid are oil (vegetable or mineral) or seawater mixed with an antifreeze solution (ethylene glycol) (DEC 2015). The Project will require installation of one new-style well blowout preventer and

result in one new intermittent discharge of fluid (Discharge 006) estimated at a maximum of 300 gallons per event. The primary mode of operation should not result in a discharge because the blowout preventer is a new-style designed to discharge into the annulus space of the borehole and commingle with the drilling fluids. However, there is a small chance of direct discharge which is why the application includes the potentially of up to three discharges of blowout preventer fluid during the Project as a conservative precaution.

3.3 Noncontact Cooling Water (Discharge 009)

For the Permit, noncontact cooling water is seawater used for once-through cooling of the MODU drawwork brakes through a heat exchanger, and is discharged overboard. The drawworks on the Spartan 151 are Mid-Continent U-1220 driven by two GE 752 DC motors each rated at 1000 horsepower (intermittent) complete with Elmagco 7838 electric brakes. Generally, noncontact cooling water has the potential to be 12-27 degrees Celsius (°C) or 53-80 Degrees Fahrenheit (°F) warmer than the receiving water, generally 0-12 °C (32-53 °F).

Although the total seawater intake for the MODU is 375 gpm, only 92 gpm (130,000 gpd) is routed through heat exchangers; 75 % of the intake bypasses the heat exchangers to limit the operating pressure of the system. Hence, only 25 % of the discharge experiences a temperature increase prior to discharge (See Table 1).

Table 1: Summary of Spartan 151 Noncontact Cooling Water Temperature Data from 2018

Value	Discharge		Intake		Delta	
	°F	°C	°F	°C	°F	°C
Average	55.5	12.5	54.0	12.2	2.3	1.3
Maximum	61.7	16.5	58.5	14.7	7.6	4.2
Minimum	44.0	6.7	48.0	8.9	-2.4	-1.3

Table 1 demonstrates that the noncontact cooling water temperature differential from ambient conditions in MODU operations has been shown to be minimal. The temperature differential was monitored daily during operations using the Spartan 151 MODU. The average temperature differential from receiving water was 1.3 Degrees Celsius (°C) or 2.34 Degrees Fahrenheit (°F). The maximum daily temperature difference was 4.2 °C or 7.6 °F.

No chemical additives have been proposed in the application based on using the Spartan 151. However, the use of biocides or corrosion inhibitors is common and could be used if a substitute MODU is ultimately used for the Project. Therefore, the POCs for noncontact cooling water include chronic toxicity as well as temperature. To account for temperature and chronic toxicity, a mixing zone is evaluated in Section 4.3.

3.4 Uncontaminated Ballast Water (Discharge 010)

Ballast water is seawater that is taken into a vessel hull to maintain the proper floater level and ship draft for stabilization in deeper waters, or for setting the MODU legs onto the sea floor prior to drilling. In this case, the ballast water will be taken on during the preloading of the legs, which can last between 12 and 36 hours. Once the MODU is in place and pinned to the sea floor, the ballast water is discharged. At least one discharge event is anticipated for preload water necessary to set the legs of the Spartan 151 on location. However, these discharges may occur multiple times during the Project if the MODU is repositioned or reset, making the discharges intermittent. The application provides for an estimated volume of 22,560 barrels (bbl) or 0.947 million gallons per day (mgd) for each positioning attempt at a well location.

In legacy vessels, ballast water was often combined with other vessel wastewater but this is not the case in newer vessels, such as the Spartan 151. Uncontaminated ballast water is seawater that has been taken into a vessel hull and has not been comingled with bilge or other wastes. Because a different MODU could conceivably be used, characterization of this discharge includes potential contamination by hydrocarbons (visible sheen). If contaminated with oil, the ballast water must be treated using an oil-water separator (OWS) or other oil removing process prior to being discharged.

3.5 Excess Cement Slurry (Discharge 012)

The discharge of excess cement slurry (Discharge 012) results from left-over cement slurry and equipment wash-down after cementing operations during drill casing installation. The volumes vary based on drilling conditions and the casing and testing program in effect. Typical volumes range between 5,500 gpd to 55,500 gpd. In general, there may be approximately four intermittent discharge events, or more, of excess cement slurry during well installation (DEC 2015).

The applicant summarized past discharges in their application and have been summarized in Table 2. Based on Project-specific estimates, excess cement slurry volumes generated from Project operations are expected to result in an expected daily maximum discharge of 17,346 gallons, or 413 bbl. In addition, only one day of discharge of excess cement slurry is anticipated to be necessary during the Project.

Table 2: Summary of Excess Cement Slurry Discharges Between 2011 and 2018

GREYLING PLATFORM			
Drilling Project	**Discharge Days**	**Total Volume (bbl)**	**Year**
2011 Drilling	2	85	2011
STEELHEAD PLATFORM			
Drilling Project	**Discharge Days**	**Total Volume (bbl)**	**Year**
Well M-21	4	433	2011
Well M-29A	2	71	2012
Well M-31A	4	191	2012
Well M-31A Slot Recovery	1	60	2012
Well M-31A Slot Recovery(2)	2	110	2013
Well M-31B	2	180	2013
Well M-34	3	593	2014
Well M-22	2	200	2018
Well M-35	5	645	2018
MONOPOD PLATFORM			
Drilling Project	**Discharge Days**	**Total Volume (bbl)**	**Year**
2013 Drilling	1	34	2013
2014 Drilling	1	118	2014
Well A-31	2	60	2014
Well A-27RD2	1	18	2016
ANNA PLATFORM			
Drilling Project	**Discharge Days**	**Total Volume (bbl)**	**Year**
Well AN-17 Recovery Slot	4	190	2013
Well AN-17A	2	140	2013/2014

The POCs for cement slurry includes turbidity and TSS with tightly bound metal to the cement matrix. Hence, disassociation of total metals to dissolved metals will not be significant in the high

oxygen environment of the marine receiving water. Hence, mixing zone is considered for the primary POC of turbidity in Section 3.5.

3.6 Summary of Requested Discharges and Volume Estimates

Figure 3 provides a depiction of the four discharges including blowout preventer fluid (Discharge 006), noncontact Cooling Water (Discharge 009), uncontaminated ballast water (Discharge 010), and excess cement slurry (Discharge 012). Table 3 provides a summary of the frequency, duration, and discharge flowrates and volumes of these discharges anticipated for the Project.

Figure 3: Flow Diagram of Miscellaneous Discharges 006, 009, 010, and 012

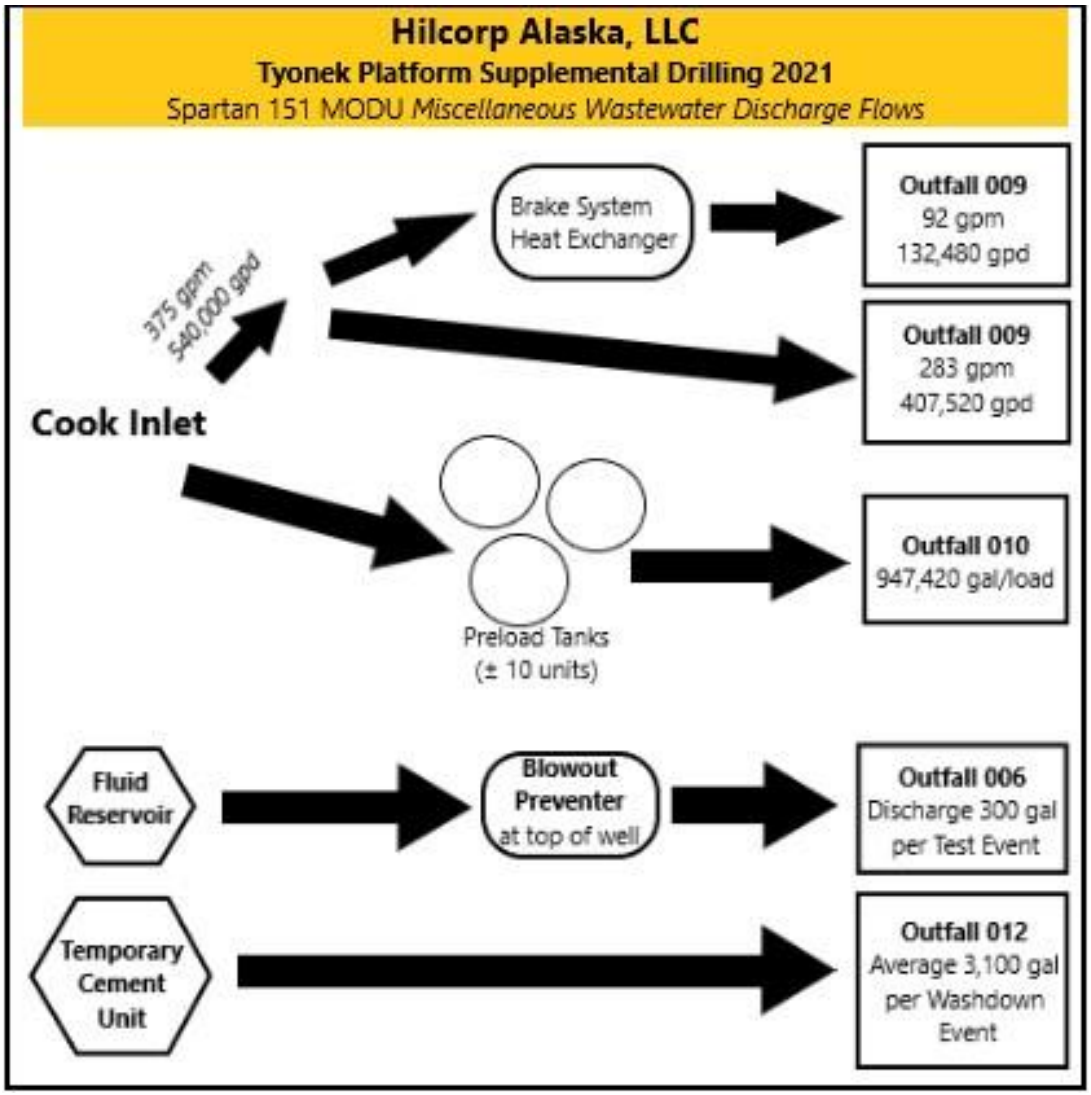

Table 3: Requested Discharges and Estimated Volumes

#	Discharge	Frequency		Flow or Volume			
		Days /Week *(avg)*	Months /Year *(avg)*	Max Daily Flow Rate *(mgd)*	Max Total Daily Volume (bbls)	Max Total Annual Volume (bbls)	Duration *(days)*
004	Graywater	7	6	0.00715	170	30,656	180
006	Blowout Preventer Fluid	1	4	0.0003	7.1	21.4	3
009	Noncontact Cooling Water (25%)	7	6	0.1325	3,155	570,000	180
009	Noncontact Cooling Water (75%)	7	6	0.4074	9,700	1,746,000	180
010	Uncontaminated Ballast Water	1	<1	0.9475	22,560	22,560	1
012	Excess Cement Slurry	1	4	0.01655	413	413	1

4 RECEIVING WATERS

4.1 Water Quality Standards

Section 301(b)(1)(C) of the CWA requires the development of limits in permits necessary to meet water quality standards by July 1, 1977. Per 18 AAC 83.435, APDES permits must include conditions to ensure compliance with 18 AAC 70 – Alaska Water Quality Standards (WQS). The WQS are composed of waterbody use classifications, numeric and/or narrative water quality criteria, and an Antidegradation Policy. The use classification system designates the beneficial uses that each waterbody is expected to achieve. The Department has determined that all of the marine use classes must be protected in state waters in Cook Inlet. The numeric and/or narrative water quality criteria are the criteria deemed necessary by the state to support the beneficial use classification of each waterbody. The Antidegradation Policy ensures that the beneficial uses and existing water quality are maintained.

Waterbodies in Alaska are designated for all uses unless the water has been reclassified under 18 AAC 70.230 as listed under 18 AAC 70.230(e). Some waterbodies in Alaska can also have site–specific water quality criterion per 18 AAC 70.235, such as those listed under 18 AAC 70.236(b). The Department has determined that there has been no reclassification nor has site-specific water quality criteria been established for Cook Inlet at the location of the permitted discharge. Accordingly, site-specific criteria are not applicable.

4.2 Water Quality Status of Receiving Water

Any part of a waterbody for which the water quality does not, or is not expected to, intrinsically meet applicable WQS is defined as a "water quality limited segment" and placed on the state's impaired waterbody list. For an impaired waterbody, Section 303(d) of the CWA requires states to develop a Total Maximum Daily Load (TMDL) management plan for the waterbody. The TMDL documents the amount of a pollutant a waterbody can assimilate without violating WQS and allocates that load to known point sources and nonpoint sources.

Cook Inlet is not included as an impaired waterbody in the *Alaska's Final 2020 Integrated Water Quality Monitoring and Assessment Report, May 17, 2021* (*2020 Integrated Report*) nor is it listed as a CWA 303(d) waterbody requiring a TMDL. Accordingly, a TMDL has not been established for Cook Inlet.

4.3 Mixing Zone Analysis

Per 18 AAC 70.240, excluding 18 AAC 240(g)(2), (3), and (4) as amended through March 23, 2006 the Department may authorize mixing zone(s) in an APDES permit. Determination of mixing zones requires an evaluation of critical characteristics of the receiving water, effluent discharges and other pertinent factors, combined with use of an approved mixing zone modeling program such as the Cornell Mixing Zone Model (CORMIX) or Visual Plumes (VP). Because the mixing zones requested by HAK are for discharges from the Spartan 151 and have been modeled previously for other similar permits (i.e., AK0055883, AK0053690, and AKG315200), the application presents these previous modeling results and demonstrates these results are also applicable for the Platform location. Hence, DEC's evaluation includes validation that these previous mixing zone model results are appropriate when applied to the Platform location.

The Mixing Zone Analysis Checklist (Attachment 1) outlines the criteria that must be considered and met per mixing zone regulations for the Department to authorize a mixing zone. These criteria include: the size of the mixing zone; treatment technology; existing uses of the waterbody; human consumption; spawning areas; human health; aquatic life; and endangered species. Subsequent sections 4.3.1 through 4.3.9 summarize the Department's regulatory mixing zone analyses.

4.3.1 Mixing Zone Modeling and Methodology

DEC has determined the mixing zones for discharges listed in this section are appropriate based on comparison with empirical mixing zone studies and confirmation modeling of critical ambient and effluent conditions that meet mixing zone regulatory requirements. To ensure the discharge will not exceed the chronic whole effluent toxicity (WET) criteria of 1.0 chronic toxicity units (TU_c) per 18 AAC 70.030, the Department authorizes a standardized 100-meter (m) radius mixing zone for the miscellaneous discharges of blowout preventer fluid, noncontact cooling water, uncontaminated ballast water, and excess cement slurry. The 100-m chronic mixing zone accounts for the potential use of chemical additives in noncontact cooling water that could impart chronic toxicity above 1.0 TU_c at the point of discharge. The thermal discharge from noncontact cooling water was verified by modeling to ensure water quality criteria for temperature would be met prior to the boundary of the 100-m chronic mixing zone that was sized based on chronic toxicity. Lastly, given that graywater is being treated using an MSD, DEC authorizes acute and chronic mixing zones for graywater that are sized based on a maximum TRC concentration of 1 mg/L, which is consistent with an appropriately operated MSD that dechlorinates prior to discharge. The authorized mixing zones are as follows:

- Discharge 004 – Graywater: DEC authorizes a 35-m radii chronic mixing zone and an 18-m radii acute mixing zone extending from the seafloor to the sea surface for TRC, with corresponding dilution factors of 77 and 134, respectively.
- Discharge 006 – Blowout Preventer Fluid: DEC DEC authorizes a standardized 100-m radii chronic mixing zone extending from the seafloor to the sea surface for chronic toxicity.
- Discharge 009 – Noncontact Cooling Water: DEC authorizes a standardized 100-m radii chronic mixing zone extending from the seafloor to the sea surface for chronic toxicity and temperature, with a corresponding dilution factor of 189.
- Discharge 010 – Uncontaminated Ballast Water: DEC authorizes a standardized 100-m radii chronic mixing zone extending from the seafloor to the sea surface for chronic toxicity.
- Discharge 012 – Excess Cement Slurry: DEC authorizes a standardized 100-m radii chronic mixing zone extending from the seafloor to the sea surface for turbidity and chronic toxicity.

These mixing zones were established using previous modeling studies while verifying these previous results are appropriate for the site-specific receiving water conditions at the Platform. The critical hydrodynamic ambient conditions at the Sabre project site was used by Kinnetic Laboratories, Inc. (Kinnetic) to model these discharges from Spartan 151 at Sabre Project Site and for the location of the Granite Point Platform (GPP). The critical currents at the Sabre Project Site were the 10th percentile low current conditions and the 90th percentile high current conditions, 0.2 meters per second (m/s) and 2.3 m/s, respectively. At the GPP, these critical currents were 0.3 m/s at the 10th percentile and 2.4 m/s for the 90th percentile. The GPP critical currents are equivalent to the critical ambient hydrodynamic conditions used by Parametrix for mixing zone modeling for the Platform as described in HAK's Cook Inlet General Permit (CIGP) application, which were 0.3 meters m/s and 2.4 m/s, respectively. These differences were found to result in insignificant changes in the authorized mixing zones. Since the critical currents at the Platform are determined to be equivalent, the application of these mixing zones as presented by HAK are equally appropriate based on the critical currents at the Platform.

The receiving water density profile used to model the Sabre Project Site is that of slightly stratified, from 1014 to 1016 kg/m^3. Similarly, Parametrix used a surface density of 1015.3 kg/m3, and a bottom density of 1016.0 kg/m3 for their modeling efforts at both the GPP and Platform. These minor differences in critical conditions between the Sabre and GPP locations resulted in a 1 meter increase in the radii for acute and chronic mixing zones for TRC in the discharge of graywater at the GPP. Note that these minor differences did not affect the 100-m standardized mixing zones for miscellaneous discharges. Because effluent and receiving water critical conditions are equivalent, HAK requested the same size mixing zones for graywater at the Platform as those authorized previously for the GPP (18 m radii acute and 35-m chronic). DEC has reviewed the ambient receiving water conditions used for the GPP and Platform locations, relative to the Sabre Project Site modeling, and concludes that the critical conditions are similar enough to provide equivalent results. DEC concurs with HAK that the previous mixing zone modeling for the Spartan 151 at the GPP is appropriate for the Permit.

4.3.1.1 Graywater (Discharge 004)

The flow rate for the Graywater Discharge (Discharge 004) modeling performed by Kinnetic was based on the assumption that the total discharge would have a flow rate of 0.00023 m^3/s (i.e., 3.64 gpm or 5,250 gpd). The effluent concentration modeled for TRC is 1.0 mg/L, which has been observed to be a consistently attainable concentration after the dechlorination step of MSD treatment. The acute and chronic water quality criteria for TRC is 13.0 micrograms per liter (µg/l) and 7.5 µg/l, respectively.

DEC authorized a chronic mixing zone of 35 m and an acute mixing zone of 18 m for the Spartan 151 graywater discharge based on modeling conducted by Parametrix for GPP. As discussed above, the conditions at the Platform are equivalent to those at the GPP and this supports the applicants request for similar sized mixing zones. Therefore, DEC authorizes a chronic mixing zone for TRC in graywater of 35-m radius and an acute mixing zone of 18-m radius, with corresponding dilution factors of 77 and 133, respectively. Based on the minimum current of 0.3 m/s, a drifting organism is expected to traverse the acute mixing zone in 57 seconds (0.94 minutes). This is well below the 15 minutes typically used to ensure no lethality to drifting organisms per 18 AAC 70.240(d)(7).

4.3.1.2 Blowout Preventer Fluid (Discharge 006)

DEC authorizes a 100-m radius mixing zone for unlikely discharge of blowout preventer fluid. Blowout preventer fluid is usually not discharged directly but is usually circulated into the drilling mud system. In the unusual event it is discharged the total volume is less than 300 gallons based on

well projects conducted between January 2011 and September 2018 in the Cook Inlet. Components of blowout preventer fluid (e.g., mineral oil, vegetable oil, and ethylene glycol) could contributed to chronic toxicity and necessitate a mixing zone. Modeling done by Parametrix for the Draft AKG315200 General Permit indicates that there will not be toxicity at the boundary of the standardized 100-m mixing zone for miscellaneous discharges and it is unlikely to be a water quality concern based on discharge volumes, chemical constituents, and the authorized dilution factor of 189.

4.3.1.3 Noncontact Cooling Water (Discharge 009)

DEC authorizes a standardized 100-m radius mixing zone for chronic toxicity and temperature for noncontact cooling water discharges. A chronic mixing zone is necessary for noncontact cooling water based on the potential use of chemical additives that could increase chronic toxicity above 1.0 TU_c at the point of discharge. Because the discharge will also have elevated temperature, the discharge was modeled in CORMIX to ensure water quality criteria for temperature would be met at the boundary of the 100-m mixing zone. Spartan 151-specific modeling conducted by Kinnetic for the GPP used a flow rate of 0.0058 m^3/s (92 gpm or 132,240 gpd). The temperature of the receiving water was modeled as 12° C (54° F) and the effluent temperature at 54°C (80° F). Based on critical receiving water and effluent conditions, the model predicted the temperature criteria would be met within the first 20 meters of the 100-m authorized chronic mixing zone. For chronic toxicity, the dilution factor applicable at the boundary of the authorized chronic mixing zone is 189, and represents the minimum dilution at the maximum effluent discharge and critical receiving water conditions. The 100 m chronic mixing zone and dilution factor of 189 authorized under this permit are consistent with the Spartan 151-specific mixing zone proposed in the Draft AKG315200.

Temperature data collected from the Spartan 151 over approximately four months of operation are summarized in Table 1 in Section 3.3. The average intake water was 12.2ºC, which is very close to the modeled ambient temperature. However, the average discharge temperature, was significantly lower than the 54ºC temperature used in the model. The maximum expected temperature calculated using the 2018 data is 22.36 ºC, well below the 54ºC used for the Sabre modeling. In addition, the calculated maximum expected temperature is almost identical to the 23ºC discharge temperature assumption used by Parametrix to model noncontact cooling water discharges at the Platform for the HAK Cook Inlet General Permit mixing zone submittal. In addition, the maximum measured difference between receiving water and effluent temperature was observed to be 4.2 ºC. Hence, the required dilution is 4.2. This new data indicate that the water quality criteria for temperature will be met within a few meters of the point of discharge, well within the authorized 100-m mixing zone.

4.3.1.4 Uncontaminated Ballast Water (Discharge 010)

DEC authorizes a standardized 100-m radius mixing zone to account for the unlikely scenario that ballast water becomes contaminated (i.e., has a sheen) triggering treatment in an OWS in order remove contamination prior to discharge. Although an OWS will remove the sheen, low concentrations of hydrocarbons (e.g., TAH and TAqH) could be present above their respective water quality criteria. Uncontaminated ballast water is an intermittent and low volume discharge that averages 0.947 mgd per discharge based on Spartan 151 (See Section 3.4).

4.3.1.5 Excess Cement Slurry (Discharge 012)

DEC authorizes a standardized 100-m radius mixing zone for turbidity and chronic toxicity for excess cement slurry discharges with a dilution factor of 189. Excess cement slurry is an intermittent and low volume discharge that averages 3,178 gpd based on data from Cook Inlet Platforms between January 2011 and September 2018 (See Section 3.5). Furthermore, most

individual wells only require one or two discharges during development. Modeling done by Parametrix in support of the Draft AKG315200 General Permit supports that excess cement slurry would not contribute to toxicity at the boundary of the mixing zone. In addition to a 100-m radii mixing zone, the discharge of excess cement slurry is authorized to have a 100-m radii short-term zone of deposit per Section 4.4.

4.3.2 Mixing Zone Size Constraints

Per 18 AAC 70.240(k), the Department may authorize a mixing zone as proposed, or with conditions, if mixing zone is not greater than 10% of the receiving water area or the cumulative linear length of the mixing zones intersected on any given cross section is less than 10 %. Neither of these two size limitations are exceeded by authorization of the aforementioned mixing zone authorizations. DEC has also determined that the authorized mixing zone are sized appropriately to prevent lethality to passing organisms per 18 AAC 70.240(d)(7).

4.3.3 Technology

18 AAC 70.240(c)(1) requires the Department to determine if "an effluent or substance will be treated to remove, reduce, and disperse pollutants, using methods found by the Department to be the most effective and technologically and economically feasible, consistent with the highest statutory and regulatory treatment requirements" before authorizing a mixing zone. Applicable "highest statutory and regulatory requirements" are defined in 18 AAC 70.240(c)(A), (B), and (C) as follows:

> A) Any federal TBEL identified in 40 CFR 125.3 and 40 CFR 122.29, as revised as of July 1, 2005 and adopted by reference;
>
> B) Minimum treatment standards in 18 AAC 72.050; and
>
> C) Any treatment requirement imposed under another state law that is more stringent than the requirement of this chapter..

The first part of the definition includes all applicable TBELs based on ELGs or TBELs developed using case-by-case BPJ. DEC is relying on the ELGs for the Oil and Gas Extraction Point Source Category at 40 CFR Part 435 Subpart-D (Coastal Subcategory adopted by reference at 18 AAC 83.010(g)(3). These ELGs are applicable to the discharge of graywater, and prohibit the discharge of floating solids, foam, or garbage (See Section 5.2.1.1).

For graywater, the Department has also adopted TBELs using case-by-case BPJ (See Section 5.3.1); these are a limit of 1.0 mg/L TRC. For blowout preventer fluid, noncontact cooling water, uncontaminated ballast, and excess cement slurry DEC compared a TBEL developed using case-by-case BPJ to the narrative water quality criteria for oil and grease (visible sheen) and determined the WQBEL was more stringent than the TBEL. For all discharges under the Permit, the Department has also imposed prohibitions, stringent source control measures, and best management practice (BMP) requirements. Specifically, the use of chemical dosing practices and pollution reduction strategies are required to be included in the BMP plan for noncontact cooling water. In addition, if ballast water is observed to be contaminated, it must be treated using an OWS or similar oil removal process. The combination of source control, TBELs, and BMPs is the most effective and technologically and economically feasible method to control the pollutant discharges and represent the highest statutory and regulatory requirements.

The second part of the definition per 18 AAC 72.050 refers to the minimum treatment requirements for domestic wastewater. Graywater is domestic wastewater that requires at least primary treatment and waiver of secondary treatment (18 AAC 72.060) to be discharge under the Permit. The

permittee has satisfactorily demonstrated attainment of better than primary treatment using MSDs and has obtained a waiver of secondary treatment from DEC (See Section 5.6).

The third part of the definition includes any treatment required by state law that is more stringent than 18 AAC 70. Other regulations beyond 18 AAC 70 that may apply to this permitting action include 18 AAC 83, 18 AAC 72 and 18 AAC 15. The Permit limitations, prohibitions, and BMP requirements are consistent with both 18 AAC 83 and 18 AAC 70. The application of 18 AAC 72 is discussed in the preceding paragraph. Other than 18 AAC 72, neither the regulations in 18 AAC 15 nor another state legal requirement that the Department is aware of impose more stringent treatment requirements than 18 AAC 70.

4.3.4 Existing Use

Per 18 AAC 70.240(c)(2), when authorizing mixing zones the Department must ensure that the existing uses of the waterbody outside the mixing zone are not partially nor completely eliminated and the overall biological integrity of the waterbody as whole is not impaired. Water quality criteria contained in WQS are developed to ensure the existing uses and biological integrity of the waterbody are protected. For the miscellaneous discharges of blow preventer fluid, noncontact cooling water, uncontaminated ballast water, and excess cement slurry the Department has authorized a standardized 100-m chronic mixing zone based on chronic toxicity or other potential pollutants. When coupled with prohibitions and stringent BMP requirements, attainment of water quality criteria at and beyond the boundary of the mixing zone is ensured. Similarly, a 35-m chronic mixing has been authorized for graywater to ensure water quality criteria for TRC is met at and beyond the boundary. Because water quality criteria are met at the boundary of the chronic mixing zones and the criteria are established to protect the existing uses and biological integrity of the waterbody, the mixing zones are appropriately sized and protective of the existing uses of the waterbody as a whole.

4.3.5 Human Consumption

Per 18 AAC 70.240(c)(4)(B) the mixing zone must not create a public health hazard that would preclude existing uses of the waterbody for water supply or contact recreation. Per 18 AAC 70.240(c)(4)(C), the mixing zone must not preclude or limit established processing activities or commercial, sport, personal use, or subsistence fish and shellfish harvesting. Lastly, per 18 AAC 70.240(d)(6) the pollutants discharged cannot produce objectionable color, taste, or odor in aquatic resources harvested for human consumption; nor can the discharge.

The mixing zones are not authorized in a location where aquatic resources are harvested or that could result in precluding or limiting established processing activities or commercial, sport, personal use, or subsistence fish and shellfish harvesting. Nor is there any indication that the pollutants discharged would produce objectionable color, taste or odor in aquatic resources harvested for human consumption if such activity occurred near the outfall. Any human consumption of marine water would require a level of treatment that would remove all pollutants (e.g., desalination or reverse osmosis). Therefore, human consumption is not impacted by the discharges under the Permit.

4.3.6 Spawning Areas

Per 18 AAC 70.240(e)(1) and (2), a mixing zone will not be authorized in an lakes, streams, rivers, or other flowing freshwaters in spawning area of any of the five species of Pacific salmon found in the state or be allowed to adversely affect the present and future capability of an area to support spawning of these species. Per 18 AAC 70.240(f), a mixing zone will not be authorized in a spawning area for the following resident fish: Arctic Grayling; northern pike; lake trout; brook

trout; sheefish; burbot; landlocked coho salmon, chinook salmon, or sockeye salmon; anadromous or resident rainbow trout, Arctic char, Dolly Varden, whitefish, or cutthroat trout. Because the permit does not authorize the discharge of effluent to open waters of a freshwater lake, river, or other flowing freshwater, there are not associated discharges to anadromous fish spawning areas or the resident freshwater fish listed in the regulation.

4.3.7 Human Health

Per 18 AAC 70.240(d)(1), the mixing zones must not result in pollutants discharged at levels that will bioaccumulate, bioconcentrate, or persist above natural levels in sediments, water, or biota, or at levels that otherwise will create a public health hazard through encroachment on a water supply or contact recreation uses. The Department has reviewed available data provided by the applicant and has determined there are no bioaccumulating or bioconcentrating parameters associated with the discharges. Per 18 AAC 70.250(a)(1)(A), available evidence must reasonably demonstrate that the pollutants discharged in an authorized mixing zone will not bioaccumulate. None of the discharges are expected to contain bioaccumulative chemicals.

Per 18 AAC 70.240(d)(2) pollutants discharged must not present an unacceptable risk to human health from carcinogenic, mutagenic, teratogenic, or other effects as determined using a risk assessment method approved by the Department and consistent with 18 AAC 70.025, which indicates the lifetime incremental cancer risk level is 1 in 100,000 for exposed individuals. There are no cancer-causing pollutants being discharged at concentrations that present unacceptable risks.

4.3.8 Aquatic Life and Wildlife

Per 18 AAC 70.240(c)(4)(A),(D), and (E), pollutants for which the mixing zones will be authorized will not result in an acute or chronic toxic effect in the water column, sediments, or biota outside the boundaries of the mixing zone; a reduction in fish or shellfish population levels; or in permanent or irreparable displacement of indigenous organisms. In addition, the mixing zone must not result in undesirable or nuisance aquatic life per 18 AAC 70.240(d)(5). Because all criteria are met at the respective acute and chronic mixing zone boundaries, toxic effects in the water column, sediments, or biota will not occur outside these boundaries; existing water quality criteria protect from these occurrences. In addition, there are no anticipated displacement of indigenous species nor promotion of undesirable or nuisance aquatic life.

4.3.9 Endangered Species

Per Per 18 AAC 70.240(c)(4)(F), the mixing zone will not cause an adverse effect on threatened or endangered species. Based on the information regarding endangered species in the area of the discharges, authorized mixing zones are not likely to adversely affect threatened or endangered species per the Beluga Recovery Plan. The discharge area is within Type 2 habitat for the beluga whale, which primarily serves as a seasonal migration pathway between upper Cook Inlet summer feeding areas and lower birthing and rearing locations. Based on limited time that beluga whales migrate through this area, the discharges are not likely to cause adverse effects to beluga whales. For more information on local endangered species see Section 10.1.

4.4 Zone Of Deposit

Per 18 AAC 70.210, the Department is authorizing a 100 m radius zone of deposit for the discharge of Excess Cement Slurry (Discharge 012). The Department evaluated the potential impacts from these deposits using technical information contained in the application as applied to 18 AAC 70.210(b)(1)-(6) and other available resources. For the discharge of excess cement slurry, the deposit will be composed of naturally occurring rock, sand and gravel from cement slurry after

the fine-grain fractions have been dispersed in the mixing zone. Some cement may remain adhered to the coarse-grained deposits for short period of time. The characteristics of coarse-grained particles will have no direct or indirect impact on human health, will not bioaccumulate or persist in the environment (See Sections 4.3.5 and 4.3.7), or have impacts on aquatic life or other wildlife (See Section 4.3.8). There is adequate dispersion based on the receiving water depth at the Platform for the proposed discharge volume that will minimize potential adverse effects associated with the short-term zone of deposit.

Any fine-grained particles from cement that becomes suspended in the water column will meet all applicable water quality criteria at the boundary of the 100 m chronic mixing zone (See Section 5.1). Accordingly, all uses of the waterbody are being protected beyond the boundary of the zone of deposit and chronic mixing zone. Due to the nature of cement slurry and tidal movement of the natural gravel and sand sized sediments that occur at the Platform location, the deposit is anticipated to become intermixed with natural sediment over the course of several tidal cycles. The Department has determined the nature and duration of the deposit is not expected to adversely impact the receiving water or other uses of the waterbody beyond the boundary of the authorized zone of deposit. Based on this evaluation, the Department concludes that the requirements for authorizing a zone of deposit are met

5 EFFLUENT LIMIT DEVELOPMENT

5.1 Basis for Permit Effluent Limits

18 AAC 83.015 prohibits the discharge of pollutants to waters of the U.S. unless first obtaining a permit authorized by the APDES Program that meets the purposes of Alaska Statutes 46.03 and in accordance with CWA Section 402 and the requirements adopted by reference at 18 AAC 83.010. Per these statutory and regulatory provisions, the Permit includes effluent limits that require the discharger to (1) meet standards reflecting levels of technological capability, (2) comply with WQS, and (3) comply with other state requirements that may be more stringent.

The CWA requires that the limits for a particular pollutant be the more stringent of either TBEL or WQBEL. TBELs are either set via EPA-rule makings in the form of ELGs that correspond to the level of treatment that is achievable using available technology, or through the development of TBELS using case-by-case BPJ. In establishing permit limits, DEC first determines which ELGs must be incorporated into the Permit and whether other TBELs using case-by-case BPJ should be adopted. DEC evaluated the effluent characteristics in Section 3 to determine if the discharge could result in exceedances, or contribute to exceedances, of the water quality criteria in the receiving water beyond the boundary of the authorized mixing zones. If exceedances could occur, water quality-based effluent limits (WQBELs) must be included in the Permit.

The limits in the Permit reflect whichever requirements (technology-based or water quality-based) are more stringent. The Permit contains TBELs per 40 CFR Part 435, TBELs developed using case-by-case BPJ, and WQBELs as described in the following sections.

5.2 TBELs Based on ELGs

EPA has promulgated national ELGs for the Oil and Gas Extraction Point Source Category at 40 CFR Part 435 Subpart D (Coastal Subcategory). DEC adopted the ELGs by reference at 18 AAC 83.010(g)(3). These subparts specify Best Available Technology Economically Achievable (BAT); or Best Conventional Pollutant Control Technology (BCT); or Best Practicable Control Technology Currently Available (BPT), and New Source Performance Standards (NSPS). The following sections describe the applicable TBELs evaluated in Permit limit derivation.

5.2.1 Graywater (Discharge 004)

5.2.1.1 No Floating Solids, Foam, or Garbage

The ELGs prohibit the discharge of foam per 40 CFR 435.43 (BAT) and floating solids and garbage per 40 CFR 435.44 (BCT). In addition to these ELG TBELs, DEC also applies a TBEL using case-by-case BPJ per Section 5.3.1 and other requirements based on 18 AAC 72 per Section 5.6.

5.3 TBELs based on Case-by-Case Best Professional Judgment

In situations where ELGs have not been developed, or have not considered specific discharges or pollutants, a regulatory agency can develop case-by-case TBELs based on BPJ using the same performance-based approach applied to develop national ELGs. Per CWA Section 402, developing limits using case-by-case BPJ requires the permitting authority to consider key aspects including: the age of equipment and facilities involved; the process employed; the engineering aspects of the application of various types of control techniques; process changes; the cost of achieving such effluent reduction; non-water quality environmental impacts (including energy requirements); the cost of implementing these conditions relative to the environmental benefits achievable; and other factors as deemed appropriate.

The Permit considers TBELs previously developed by EPA and DEC using case-by-case BPJ for graywater (Discharge 004), blowout preventer fluid (Discharge 006), noncontact cooling water (Discharge 009), uncontaminated ballast water (Discharge 010), and excess cement slurry (Discharge 012). The following sections describe the case-by-case TBELs developed using BPJ by and approved by the Department for use in the permit.

5.3.1 Total Residual Chlorine – Graywater (Discharge 004)

The Department has established a TBEL using case-by-case BPJ for a unique situation for the Spartan 151, which uses an MSD to provide greater than primary treatment per Section 5.6. The MSD uses chlorination followed by dechlorination. DEC considers dechlorination a required technology and establishes a case-by-case TBEL using BPJ for TRC of 1.0 mg/L maximum downstream of the dechlorination system. However, this TBEL developed using case-by-case BPJ only applies to situations where an MSD is being used to treat graywater. Otherwise, this limit does not apply. Because DEC regulations consider graywater to be domestic wastewater, this TBEL using case-by-case BPJ is consistent with limits applied as if it were blackwater being treated in the MSD. To help ensure the 1.0 mg/L TRC limit is consistently attained, the Permit requires development of specific BMPs for the operation of the dechlorination system.

5.3.2 No free oil – Miscellaneous Discharges (006, 010, 012)

The prohibition of free oil applies to the miscellaneous discharges blowout preventer fluid (Discharge 006), uncontaminated ballast water (Discharge 010), and excess cement slurry (Discharge 012). Compliance is based on observation of a visible sheen on the water surface during slack tide while discharging or by Static Sheen Test at the permittees option. Static Sheen Test equipment must be maintained at the facility. The permittee must ensure that contaminated ballast water (Discharge 010) be processed through an oil-water separator, or similar process to remove oil and grease, prior to discharge. For discharges of blowout preventer test fluid (Discharge 006), uncontaminated ballast water (Discharge 010), and excess cement slurry (Discharge 012) the permittee must develop specific BMPs to support the no discharge of free oil limitation (See Section 9.3.1).

The discharge of uncontaminated ballast water is controlled via TBELs developed using case-by-case BPJ for no discharge of free oil. If ballast water is deemed to be contaminated (i.e., visible

sheen), it must be processed through an oil-water separator (OWS) or other oil removal methods and subject to the Static Sheen Test prior to discharge. Limitations for this discharge was not specifically included in the ELGs and has been developed using case-by-case BPJ during the development of previous oil and gas permits for miscellaneous discharges. Note that the definition for no discharge of free oil in 40 CFR 435.41(y) includes miscellaneous discharges, but miscellaneous discharges are not specifically defined. Hence, this limitation appears consistent with the ELGs, and has been previously vetted in other Cook Inlet oil and gas APDES permits based on consideration of aspects of CWA Section 402. The no discharge of free oil TBEL is compared to a narrative water quality criteria in Section 5.4.2.

Noncontact cooling water (Discharge 009) is not expected to contain oil as this waste stream does not contact either the production stream (i.e., oil, water, or gas from the hydrocarbon formation) or machinery surfaces where oily wastes are likely to contaminate them. However, use of chemicals for corrosion control is commonly used. For this reason, specific BMPs are required to help ensure compliance with chronic toxicity criteria should the particular MODU used at the Platform use chemical additives in the noncontact cooling water system (See Section 3.3).

5.4 Water Quality-Based Effluent Limits

CWA Section 301(b)(1) requires the establishment of limits in permits necessary to meet WQS by July 1, 1977. All discharges to state waters must comply with WQS, including the Antidegradation Policy. Per 18 AAC 83.435(a)(1), APDES permits must include conditions to meet any applicable requirement in addition to, or more stringent than, TBELs (e.g., WQBELs) that "achieve WQSs established under CWA Section 303, including State narrative criteria for water quality." The following sections discuss the WQBELs meeting 18 AAC 83.435 requirements.

5.4.1 Oil and Grease (Visible Sheen) – Graywater (Discharge 004)

The ELGs applicable to graywater (i.e., domestic waste in 40 CFR 435) do not specifically prohibit the discharge of oil. Water quality criteria per 18 AAC 70.020(17), however, require that there be no concentrations of petroleum hydrocarbons, animal fats, or vegetable oils, and that surface waters be free from floating oil, film, sheen or discoloration. Accordingly, the Permit includes a narrative WQBEL for oil and grease (visible sheen) in graywater discharges and specific BMPs to help ensure oil and grease is controlled appropriately at the source.

5.4.2 Oil and Grease (Visible Sheen) – Miscellaneous Discharges (006, 010, 012)

Water quality criteria per 18 AAC 70.020(17) discussed in Section 5.4.1, is compared to the no free oil limitation in Section 5.3.2. Because the narrative water quality criteria has a broader emphasis (i.e., includes shorelines and bottom sediments), DEC concludes the WQBEL is more stringent than the TBEL developed using case-by-case BPJ and is used as the final limitation in the Permit.

5.5 Most Stringent Limits Determination

DEC compared the narrative water quality criteria for oil and grease (visible sheen) to the TBELs based on observation of receiving water. Because the narrative WQBEL includes additional protections for sediment and shoreline, DEC has determined the WQBEL narrative is more stringent and is applying visual observation of sheen to in lieu of the ELG of no free oil except where the ELGs dictate that compliance is only by the Static Sheen Test (i.e., discharges of oil and gas drilling fluids and drill cuttings). In all other cases under the ELGs or TBELs developed previously using case-by-case BPJ compliance is by observation of the water surface similar to that for the narrative water quality criteria for oil and grease (visible sheen). DEC also has determined that compliance with the water quality narrative using the Static Sheen Test in situations where

visual observations are not possible (e.g., during periods of ice cover or broken ice conditions) is acceptable.

Table 4: Summary of Basis of Limits per Discharge Category

Discharge (Number)	TBELs		WQBELs
	ELGs	BPJ	
Graywater (004)	No Floating Solids, Foam, Garbage	TRC 1 mg/L MDL (MSDs Only)	O&G (Sheen)
Misc. Discharges (006, 010 and 012)	--	--	O&G (Sheen)

5.6 Secondary Treatment Requirements and Waivers per 18 AAC 72

Prior to discharging graywater under the Permit, the Spartan 151, or any other MODU ultimately used, must comply with the most recent version of 18 AAC 72. The following discussion is based on the version of 18 AAC 72 current as of the effective date of the Permit. The permittee may be responsible for reviewing and complying with any subsequent version that becomes available during the term of the Permit.

The Permit defines graywater per 18 AAC 72.990(35) as wastewater from laundry, kitchen, sink, shower, bath or other domestic source that does not contain excrement, urine, or combined storm water. This definition is consistent with 40 CFR 435.41(l) for domestic waste (i.e., graywater): “the materials discharged from sinks, showers, laundries, safety showers, eye-wash stations, hand-wash stations, fish cleaning stations, and galleys. Note that the definition of domestic wastewater per 18 AAC 72.990(23) does not distinguish graywater and blackwater differently; both graywater and blackwater have the same requirements under 18 AAC 72. Whereas, 40 CFR Part 435 regulates sanitary waste (i.e., blackwater) differently than graywater. Because graywater is considered a component of domestic wastewater under state regulation, graywater by itself is subject to the same regulatory requirements as domestic wastewater that contains blackwater only, or commingled black and graywater. Specifically, it is important to note that per 18 AAC 72.050, domestic wastewater discharges must meet minimum treatment requirements (i.e., secondary treatment as defined in 18 AAC 72.990(59) unless a waiver from minimum treatment is granted by the Department under 18 AAC 72.060.

In order to obtain a waiver from secondary treatment requirements, graywater must receive at least a primary treatment (as defined in 18 AAC 72) and be demonstrated not to cause adverse impacts in the receiving environment or pose human health concerns. The Spartan 151 treats graywater using an MSD, which achieves greater than primary treatment. The operator of Spartan 151 has successfully submitted characterization data with a request to DEC and has obtained a waiver to minimum treatment and can discharge graywater under the Permit. Similarly, if an alternative MODU is ultimately used under the Permit, it too must comply with the most current version of 18 AAC 72.

6 EFFLUENT LIMITS AND MONITORING REQUIREMENTS

In accordance with AS 46.03.110(d), the Department may specify the terms and conditions for discharging wastewater in a permit. The Permit includes WQBELs and TBELs derived from ELGs and case-by-case BPJ as described in Section 5. The sections describe the specific effluent limits and monitoring requirements for each discharge authorized by the Permit. **Effluent Limits and Monitoring Requirements for Graywater (Discharge 004)**

Graywater is considered domestic wastewater and is held to the same treatment requirements per 18 AAC 72, unless a waiver of secondary treatment is requested and approved. Accordingly, any MODU covered under the Permit must satisfy the requirements in the most recent version of 18 AAC 72. The Spartan 151 has obtained a waiver from secondary treatment from DEC.

Table 5: Effluent Limits and Monitoring Requirements for Graywater (Discharge 004)

Parameter (Unit)	Effluent Limitations	Monitoring Requirements	
		Frequency	Type
Total Monthly Volume (mg) [6.1.1]	Report	Monthly	Estimate or Measured
Floating solids, foam, garbage [6.1.2]	No Discharge	Daily	Observation
Oil and grease (visible sheen) [6.1.3]	No Discharge	Daily	Observation
TRC (mg/L) [6.1.4]	Maximum 1.0	Monthly	Grab

6.1.1 Flow

The Permit requires effluent flow volume to be to measured or estimated for each month a discharge occurs with the total monthly volume reported on the DMR.

6.1.2 Floating Solids, Foam, and Garbage

The Permit prohibits floating solids, foam, and garbage and requires a visual observation of the receiving water surface at a minimum frequency of once per day during daylight at the time of maximum estimated discharge (e.g., following morning or midday meals). Monitoring of the observations must be recorded in daily operating logs and made available upon request by DEC.

6.1.3 Oil and Grease (Visible Sheen)

The Permit prohibits the discharge of oil and grease as determined by a visible sheen on the receiving water surface per 18 AAC 70.020(17). Receiving water observations must be conducted once per day during daylight at the time of maximum estimated discharge (e.g., following morning or midday meals). Observations must be recorded in daily operating logs and made available upon request by DEC. To support this narrative limit, the permittee must develop specific housekeeping BMPs to minimize introduction of oil and grease at the source.

6.1.4 Total Residual Chlorine Maximum

For MODUs that use an MSD to treat graywater to greater than primary treatment, the Permit establishes a maximum limit on the TRC concentration of 1.0 mg/L, after dechlorination and prior to discharge. The permittee must develop specific BMPs to ensure proper operation and maintenance of the dechlorination system. If the MODU uses a treatment system other than an MSD to meet the primary treatment requirement, the 1.0 mg/L maximum TRC limit and specific BMPs do not apply.

6.1.5 Discharge Specific BMPs

To support the narrative limits for floating solids, foam, garbage, and oil and grease the permittee must develop specific housekeeping BMPs to minimize introduction of deleterious substances at the source. For graywater discharges treated with MSDs, the permittee must also develop specific BMPs to ensure proper operation and maintenance of the dechlorination system.

6.2 Effluent Limits and Monitoring Requirements for Miscellaneous Discharges (006, 009, 010, 012)

The monitoring and reporting requirements listed in Table 5 apply to the discharges of Blowout preventer fluid (Discharge 006), noncontact cooling water (Discharge 009), uncontaminated ballast water (Discharge 010), and excess cement slurry (Discharge 012). These discharges must comply with the following effluent limitations and monitoring requirements.

Table 6: Effluent Limits and Monitoring for Miscellaneous Discharges (006, 009, 010 and 012)

Parameter	Effluent Limitations	Monitoring Requirements	
		Frequency	Type
Maximum Daily Flow (mgd) [6.2.1]	Report	Monthly	Estimate
Oil and Grease (Sheen) [6.2.2]	No Discharge	Once/Week	Visual
Chemical Additives [6.2.3]	Report	Once/Year	Calculate
Chronic WET [6.2.3, 6.2.4 and 6.3]	Report	Varies	Grab or Composite

6.2.1 Flow

The Permit requires the average flow and maximum daily effluent flow for a given month to be to measured, or estimated, and reported on the DMR. Daily flow measurement must be conducted on a consistent basis (approximately at the same time daily) and recorded in a log and made available to DEC upon request. For noncontact cooling water (Discharge 009), if chemicals have been added and the maximum daily discharge volume is greater than 10,000 gpd or 0.010 mgd, the permittee must conduct chronic WET monitoring by collecting a grab sample that is representative of the chemically treated effluent per Section 6.2.4 at a frequency of once per year and conduct a chemical inventory per Section 6.2.3.

6.2.2 Oil and Grease (Sheen)

The prohibition of oil and grease (sheen) applies to blowout preventer fluid (Discharge 006), uncontaminated ballast water (Discharge 010), and excess cement slurry (Discharge 012) based on observation of a visible sheen on the water surface during slack tide while discharging or by Static Sheen Test at the permittee's option. The permittee must ensure that ballast water contaminated with oil and grease is processed through an OWS, or similar process, prior to discharge. For discharges of uncontaminated ballast water, the permittee must develop specific BMPs to support the no discharge of free oil limitation.

The prohibition of oil and grease (sheen) also applies to discharges of blowout preventer fluid (Discharge 006) and excess cement slurry (Discharge 012) based on observation of a visible sheen on the water surface during slack tide while discharging. However, Static Sheen Testing is not practicable for blowout preventer fluid (Discharge 006) and excess cement slurry (Discharge 012).

6.2.3 Chemical Use Optimization and Inventory

The permittee is allowed to use chemical additives in Noncontact Cooling Water (Discharge 009) but in a manner that does not exceed the most stringent of the following three constraints:

- The maximum concentrations and any other conditions specified in the EPA product registration labeling if the chemical is an EPA registered chemical;
- The maximum manufacturer's recommended concentration;
- 500 mg/L; or

- The estimated chronic toxicity based on the mixed concentration of the chemical(s) in the waste stream may not be greater than 189 TUc based on the most limiting 25 % effect concentration (EC25) listed from the aquatic toxicological information obtained in the Safety Data Sheet (SDS) for the chemical, if available. Note that when only acute toxicity data is provided on an SDS, the permittee must use a reported acute to chronic ratio (ACR) for that chemical and species, or a default ACR of 10, to estimate the TUc of the mixture. If no toxicological information is available, the chemical is not included in the estimate.

Per this Section, the permittee must maintain a precise chemical inventory of all constituents added to the discharge, including the time, dose, and frequency of each chemical additive used and actually discharged. The permittee must submit these inventory records to DEC annually by January 31 of each year.

6.2.4 Specific Pollution Reduction BMPs and BMP Revision Action Level

For noncontact cooling water (Discharge 009), the permittee must develop and implement a chemical dosing BMP to optimize the use of chemicals and to minimize the potential for chronic toxicity in miscellaneous discharges per Section 6.2.3. This requirement applies to any individual, or commingled, discharge of noncontact cooling water that has chemical additives and discharges greater than 10,000 gallons per day. This permit establishes a Pollution Reduction (PR) BMP Revision Action Level of 189 TU_c. The permittee must make revisions to existing BMPs should any single chronic WET result exceed the PR BMP Revision Action Level.

If a PR BMP Revision Action Level is exceeded, the permittee must revise the BMP to achieve less toxicity. These BMPs could be operational or physical modifications to the system process, discharge piping, and/or chemical dosing system. Exceeding a PR BMP Revision Action Level also initiates a requirement for the permittee to evaluate the system and initiate an update to line drawings as part of the BMP Plan revision.

The permittee must notify DEC in writing within one week of obtaining chronic WET results that exceed a chronic WET PR BMP Revision Action Level, and submit a letter within 60 days specifying what BMP revisions will be implemented prior to the next scheduled chronic WET monitoring event. If BMPs require modification to the physical system, updated line diagrams must be developed and submitted to DEC as an attachment to the letter. The revised BMP must be implemented to satisfy compliance with this specific BMP requirement for pollution reduction. Revisions must continue until the PR BMP Plan Action Level is achieved.

6.3 Chronic WET Monitoring Requirements

Chronic WET monitoring applies to the discharge of noncontact cooling water if chemical additives are used and the maximum daily discharge volume is greater than 10,000 gpd (0.010 mgd), including discharges that may be commingled and discharged accumulatively. If required by the Permit, chronic WET testing of the invertebrate species listed below must be conducted once per year:

- Invertebrate: For larval development tests, the permittee shall use bivalve species *Crassostrea gigas* (Pacific Oyster) or *Mytilus sp.* (mussel). Testing shall also include *Americamysis bahia* (formally *Mysidopsis bahia*, mysid shrimp) for survival and growth. Due to seasonal variability, testing may be performed during reliable spawning periods (e.g. December through February for mussels and June through August for oysters).

A series of at least five dilutions including the lowest acceptable critical dilution (1.0 %) and a control must be tested. The recommended initial dilution series is 0.5, 1.0, 3.125, 6.25, 12.5, 25, 50,

and 75% (or highest hypersaline dilution per applicable test method) along with a control of dilution water (0% effluent). However, the permittee may request written approval from DEC to modify the dilution series.

The presence of chronic toxicity shall be estimated as specified in EPA Short-Term Methods for Estimating the Chronic Toxicity of Effluents and Receiving Waters to Marine and Estuarine Organisms, Third Edition (EPA-821-R-02-014). For the bivalve species, chronic toxicity must be estimated as specified in Short-Term Methods for Estimating the Chronic Toxicity of Effluents and Receiving Water to West Coast Marine and Estuarine Organisms (EPA/600/R-95/136). Both the NOEC and 25 percent inhibition concentration (IC_{25}) must be provided in the full WET report. The chronic toxicity results reported on the DMR must use $TU_c = 100/EC_{25}$ or $100/IC_{25}$. The reported EC_{25} or IC_{25} must be the lowest point estimate calculated for the applicable survival, growth or embryo development endpoints. If the endpoint is estimated to be above the highest dilution, the permittee must indicate this on the DMR by reporting a less than value for TU_c based on the highest dilution. The Department may compare the reported TU_c based on IC_{25} with one based on NOEC during evaluation of data during the next permit reissuance. Although acute WET monitoring is not required, the permittee must estimate acute toxicity based on observations of mortality during chronic tests and include this information in the WET report.

The logistics of shipping WET samples to the lower 48 can be challenging as poor weather delays or missed connections during shipping can result in violation of the standard 36-hour hold time. If extenuating circumstances occur, WET samples hold times can exceed 36 hours but must not exceed 72 hours. The permittee must document the conditions that resulted in the need for the holding time to exceed 36 hours and any potential effect the extended hold time could have on the test results.

6.4 Additional Effluent Monitoring

DEC may require additional monitoring of effluent or receiving water for facility or site-specific purposes, including, but not limited to: obtaining data to support NOI or applications, demonstrating of water quality protection, obtaining data to evaluate ambient water quality, evaluating causes for elevated parameters in the effluent, and conducting chronic WET toxicity identification and reduction. If additional monitoring is required, DEC will provide the permittee or applicant the request in writing.

The permittee also has the option of taking more frequent samples than required under the Permit. These additional samples must be used for averaging if they are conducted using the Department approved test methods (generally found in 18 AAC 70 and 40 CFR 136 [adopted by reference in 18 AAC 83.010]). The results of any additional monitoring must be included in the calculation and reporting of the data on DMRs as required by the Permit and Standard Conditions Part 3.2 and 3.3 (Permit Appendix A).

Monitoring for effluent limitations must use methods with method detection limits that are less than the effluent limitations or are sufficiently sensitive. Monitoring effluent or receiving water for the purpose of comparing to water quality criteria must use methods with detection limits that are less than the applicable criteria or are sufficiently sensitive. Per 40 CFR 122.21(a)(3), a method approved under 40 CFR 136 is sufficiently sensitive when:

(A) The method minimum level (ML) is at or below the level of the applicable water quality criterion for the measured parameter, or

(B) The method ML is above the applicable water quality criterion, but the amount of the pollutant or pollutant parameter in the discharge is high enough that the method detects and

quantifies the level of the pollutant or pollutant parameter in the discharge (e.g., not applicable to effluent or receiving water monitored for characterization), or

(C) The method has the lowest ML of the analytical methods approved under 40 CFR 136 for the measured pollutant or pollutant parameter (e.g., the receiving water concentration or the criteria for a given pollutant or pollutant parameter is at or near the method with the lowest ML).

6.5 Electronic Discharge Monitoring Reports

6.5.1 E-Reporting Rule - Phase I

The permittee must submit a DMR for each month by the 28th day of the following month. DMRs shall be submitted electronically through NetDMR per Phase I of the E Reporting Rule (40 CFR 127). For access to the NetDMR Portal, go to https://cdxnodengn.epa.gov/oeca-netdmr-web/action/login. DMRs submitted in compliance with the E-Reporting Rule are not required to be submitted as described in Appendix A – Standard Conditions unless requested or approved by the Department. Any DMR data required by the Permit that cannot be reported in a NetDMR field (e.g., full WET Reports, mixing zone receiving water data, etc…), shall be included as an attachment to the NetDMR submittal. DEC has established an e-Reporting Information website at http://dec.alaska.gov/water/compliance/electronic-reporting-rule/ which contains general information about this new reporting format. Training modules and webinars for NetDMR can be found at https://netdmr.zendesk.com/home.

6.5.2 E-Reporting Rule - Phase II (Other Reports).

Phase II of the E-Reporting rule will integrate electronic reporting for all other reports required by the Permit (e.g., Annual Reports and Certifications) and implementation is expected to begin during the permit cycle. Permittees should monitor DEC's E-Reporting website at http://dec.alaska.gov/water/compliance/electronic-reporting-rule/ for updates on Phase II of the E-Reporting Rule and will be notified when they must begin submitting all other reports electronically. Until such time, other reports required by the Permit may be submitted in accordance with Appendix A – Standard Conditions.

7 ANTIBACKSLIDING

Per 18 AAC 83.480, a reissued permit requires that "…effluent limitations, standards, or conditions must be at least as stringent as the final effluent limitations, standards, or conditions in the previous permit." Per 18 AAC 83.480(c), also states that a permit may not be reissued "to contain an effluent limitation that is less stringent than required by ELGs in effect at the time the Permit is renewed or reissued."

Effluent limitations may be relaxed as allowed under 18 AAC 83.480, CWA 402(o) and CWA 303(d)(4). 18 AAC 83.480(b) allows relaxed limitations in renewed, reissued, or modified permits when there have been material and substantial alterations or additions to the permitted facility that justify the relaxation or if the Department determines that technical mistakes were made.

CWA 303(d)(4)(A) states that, for waterbodies where the water quality does not meet applicable WQS, effluent limitations may be revised under two conditions: the revised effluent limitation must ensure the attainment of the WQS (based on the waterbody TMDL or the waste load allocation); or the designated use which is not being attained is removed in accordance with the WQS regulations.

CWA 303(d)(4)(B) states that, for waterbodies where the water quality meets or exceeds the level necessary to support the waterbody's designated uses, WQBELs may be revised as long as the revision is consistent with the State's Antidegradation Policy. Even if the requirements of CWA 303(d)(4) or 18 AAC 83.480(b) are satisfied, 18 AAC 83.480(c) prohibits relaxed limits that would result in violations of WQS or ELGs.

State regulation 18 AAC 83.480(b) only applies to effluent limitations established on the basis of CWA 402(a)(1)(B), and modification of such limitations based on effluent guidelines that were issued under CWA 304(b). Accordingly, 18 AAC 83.480(b) applies to the relaxation of previously established TBELs based on ELGs or TBELs developed using case-by-case BPJ. To determine if backsliding is allowable under 18 AAC 83.480(b), the regulation provides five regulatory criteria (18 AAC 83.480(b)(1-5)) that must be evaluated and satisfied.

This is the first issuance of the Permit. Therefore, an anti-backsliding analysis is not required.

8 ANTIDEGRADATION

8.1 Legal Basis

Antidegradation is implicit in CWA Section 101(a) goals, explicitly referenced in CWA Section 303(d)(4)(B), and implemented through 40 CFR 131.12. Section 303(d)(4) of the CWA states that, for waterbodies where the water quality meets or exceeds the level necessary to support the waterbody's designated uses, WQBELs may be revised as long as the revision is consistent with the State Antidegradation Policy and Implementation Methods. Alaska's current Antidegradation Policy and Implementation Methods are presented in 18 AAC 70.015 *Antidegradation Policy* (*Policy*) and in 18 AAC 70.016 *Antidegradation Implementation Methods for Discharges Authorized Under the Federal Clean Water Act* (*Implementation Methods*). For these state regulations to apply under the CWA, they must be previously approved by EPA per CWA Section 303(c)(3). The *Policy* and *Implementation Methods* have been amended through April 6, 2018; are consistent with the CWA and 40 CFR 131.12; and were approved by EPA on July 26, 2018.

The following subsections document Department conformance with the *Policy* and *Implementation Methods* for the issuance of APDES Permit AK0055913 – HAK, Tyonek Platform Supplemental Development Drilling.

8.2 Receiving Water Status, Tier Determination, and Analysis Requirements

Per the Implementation Methods, the Department determines a Tier 1 or Tier 2 classification and protection level on a parameter-by-parameter basis for the waterbody. The Implementation Methods also describe a Tier 3 protection level applying to designated waters, although at this time no Tier 3 waters have been designated in Alaska.

The marine waters of Cook Inlet, covered under the Permit, are not listed as impaired (Categories 4 or 5) in the *2020 Integrated Report*. Therefore, no parameters have been identified where only the Tier 1 protection level applies. Accordingly, this antidegradation analysis applies the Tier 2 protection level on a parameter-by-parameter basis consistent with 18 AAC 70.016(c)(1) and 18 AAC 70.015(a)(2), that states if the quality of water exceeds levels necessary to support propagation of fish, shellfish, wildlife, and recreation in and on the water, that quality must be maintained and protected, unless the Department authorizes a reduction in water quality. Prior to authorizing a reduction of water quality, the Department must first analyze and confirm the findings under 18 AAC 70.015(a)(2)(A-D) are met. Because Tier 1 protection applies to all waters of the U.S. in the state, the analysis must be conducted with implementation procedures in

18 AAC 70.016(b)(5)(A-C) for Tier 1 protection. For Tier 2 protection, the analysis must also comply with 18 AAC 70.016(c)(7)(A-F). These analyses and associated finding are summarized below.

8.3 Tier 1 Analysis of Existing Use Protection

The summary below presents the Department's analyses and findings for the Tier 1 analysis of existing use protections per 18 AAC 70.016(b)(5) finding that:

> *(A) existing uses and the water quality necessary for protection of existing uses have been identified based on available evidence, including water quality and use related data, information submitted by the applicant, and water quality and use related data and information received during public comment;*

The Department reviewed water quality data, environmental monitoring studies, and information on existing uses within the coverage area. The Department finds the information reviewed as sufficient and credible to identify existing uses and water quality necessary for Tier 1 protection.

> *(B) existing uses will be maintained and protected; and*

Per 18 AAC 70.020 and 18 AAC 70.050, marine waters are protected for all uses. Therefore, the most stringent water quality criteria found in 18 AAC 70.020 and in *the Alaska Water Quality Criteria Manual for Toxic and Other Deleterious Organic and Inorganic Substances, 2008 (Toxicity Manual*) apply and were evaluated to ensure existing uses and the water quality necessary for protection of existing uses of the receiving waterbody are fully maintained and protected. Water quality criteria are developed to be protective of existing uses. The discharges authorized under the Permit are controlled or limited to either meet criteria at the point of discharge, or at the boundary of the chronic mixing zone, if applicable. Given water quality criteria is met at the boundary of the chronic mixing zone for all parameters, the existing uses of the waterbody as a whole are being maintained and protected.

> *(C) the discharge will not cause water quality to be lowered further where the department finds that the parameter already exceeds applicable criteria in 18 AAC 70.020(b), 18 AAC 70.030, or 18 AAC 70.236(b).*

As discussed in (B), the Permit has been developed to ensure discharges shall not cause or contribute to an exceedance of water quality criteria. As previously stated, the marine waters of Cook Inlet covered under the Permit are not listed as impaired. Therefore, no parameters were identified as already exceeding the applicable criteria in 18 AAC 70.020(b) or 18 AAC 70.030.

The Department concludes the terms and conditions of the Permit will be adequate to fully protect and maintain the existing uses of the water and that the findings required under 18 AAC 70.016(b)(5) are met.

8.4 Tier 2 Analysis for Lowering Water Quality

8.4.1 Scope of Tier 2 Analysis

Per 18 AAC 70.016(c)(2), an antidegradation analysis is only required for those waterbodies needing Tier 2 protection and which have any new or existing discharges that are being expanded based on permitted increases in loading, concentration, or other changes in effluent characteristics that could result in comparative lower water quality or pose new adverse environmental impacts. Per 18 AAC 70.016(c)(2)(A), the analysis will only be conducted for the portion of the discharge that represents an increase from the existing authorized discharge. Additionally, per

18 AAC 70.016(c)(3), DEC is not required to conduct an antidegradation analysis for a discharge that is not expanding.

Per 18 AAC 70.990(75), "new or expanded" with respect to discharges means discharges that are regulated for the first time or discharges that are expanded such that they could result in an increase in pollutant load or concentration or other changes in discharge characteristics that could lower water quality or have other adverse environmental impacts.

Because AK0055913 is a new permit, all discharges under the Permit are considered new discharges and must have a Tier 2 Analysis.

8.4.2 Tier 2 Analysis

The *Policy* in 18 AAC 70.015(a)(2) states that if the quality of water exceeds levels necessary to support propagation of fish, shellfish, wildlife, and recreation in and on the water (i.e., Tier 2 waters), that quality must be maintained and protected. The Department may allow a reduction of water quality only after finding that the most practicable and effective pollution prevention, control, and treatment methods are being used such that lowering of water quality is necessary. Upon making this determination, the specific requirements of the *Policy* noted in 18 AAC 70.015(a)(2)(A)-(D) must be met. The Department's findings are presented below.

8.4.2.1 Tier 2 Alternatives Analysis

DEC requested an alternatives analysis to support HAK's application and this antidegradation analysis. Per 18 AAC 70.016(c)(4)(C-F), the applicant must submit a description and analysis of a range of practicable alternatives that have the potential to prevent or lessen the degradation associated with the expanded discharge. The analysis must identify the water quality environmental impacts and relative costs for each practicable alternative. HAK submitted their analysis on January 29, 2019. DEC has reviewed and this submittal and has determined it is sufficient for Department review.

8.4.2.1.1 Gray Water (Discharge 004)

Gray water produced on the Spartan 151 MODU is treated with two marine sanitation devices (MSDs), which generate chlorine through an electrolytic process. Effluent is filtered and dechlorinated after passing through the MSDs.

Production of chlorine is an inherent part of the treatment process, and dechlorination prior to discharge is standard practice. In fact, many permits, including the proposed AKG315200, require a TRC of no more than 1.0 mg/L post- dechlorination prior to discharge. The Spartan 151 MSDs meet primary treatment standards, and the gray water treatment system has received a waiver of secondary treatment as provided under 18 AAC 72.060.

The only alternative to discharging the graywater is to containerize it and ship it to shore for disposal at an appropriate facility. Assuming an average discharge of 4,176 gpd (as measured in 2019 operations at the GPP) for 90 days, a minimum of 375,000 gallons of gray water would have to be containerized and transferred. Using cost data from 2019 operations, containerizing and disposing of these wastes would add a minimum of $203,000 to the cost of drilling operations.

Considering the level of treatment provided, and the ability of the discharge to meet chronic and acute water quality standards at the boundary authorized mixing zones, the Department has determined that the MSDs provide the most practicable and effective method of pollution control and treatment, with a minimal reduction of water quality under 18 AAC 70.015(a)(2)(A).

8.4.2.1.2 Blowout Preventer Fluid (Discharge 006)

Blowout preventer fluid is an intermittent and low volume (<300 gpd) discharge that is a result of fluid loss during required testing of the blowout prevention device. Currently, there is no economically practicable way to capture blowout preventer fluid for offsite treatment from the discharge location near the seafloor. The permittee must manage the blowout preventer fluid discharge through controlling its constituents. The Department mandates permittees to use the least toxic materials and associated concentrations that meet design criteria and industry guidelines (See Section 9.3.1.2). Expected constituents of blowout preventer fluid (e.g., mineral oil, vegetable oil, sea water, and ethylene glycol) are not water quality criteria toxic substances. BMP guidelines must be followed for the prevention of free oil (See Section 6.2.2).

Based on modeling performed on Discharge 006 in support of the AKG315200 Draft General Permit for Cook Inlet Oil and Gas Exploration the Department has determined that the discharge would not result in chronic toxicity at the edge of the standard mixing zone. The minimal reduction of water quality after BMP controls are implemented is permissible under 18 AAC 70.015(a)(2)(A).

8.4.2.1.3 Noncontact Cooling Water (Discharge 009)

Temperature data collected during drilling operations conducted from July 10 through October 3, 2018 from the Spartan 151 revealed an average intake temperature of 12.2^{o}C and an average discharge temperature of 12.5^{o}C, yielding an average temperature rise of 0.3^{o}C. However, the maximum temperature differential was 4.2 ^{o}C, which exceeds the water quality standard for temperature under 18AAC 70.020(b)(22)(A)(i). In addition, the maximum discharge temperature was 16.5^{o}C, which exceeds the water quality standard under 18 AAC 70.020(b)(22)(A)(ii) for water supply to seafood processing. Using the RPA WQBEL Tool, a maximum expected temperature of 22.36^{o}C was calculated using the 2018 data.

Mixing zone modeling performed for the AK0053690 used an effluent temperature of 54°C, much higher than temperatures recorded during 2018 operations and the maximum expected temperature. Modeling for AK315200 used an effluent temperature of 23°C, which is almost identical to the calculated maximum expected temperature.

Modeling performed for the two permits indicate that both the differential temperature and absolute discharge temperature will meet the applicable water quality criteria well within the boundary of the requested 100-meter-radius mixing zone.

A possible alternative to discharge of noncontact cooling water is to pass the water through heat exchangers in a closed loop system; which transfers heat from the noncontact cooling water to another medium. Although an engineering study has not been performed, converting to a closed loop system may be possible but such work is estimated to add as much as $1,000,000 to the cost of the project. In addition, such modifications may not be applicable to other MODUs that may discharge under this permit. Taking into account the relatively small temperature differential between the incoming seawater and the discharge, the cost of a closed loop system is not commensurate with the environmental benefits and has cross-media impacts.

Considering the relatively low temperature differential, the ability of the discharge to meet water quality standards at the boundary of the authorized 100-m mixing zone, and the minimal benefits and high cost of a closed loop system, the Department has determined that surface discharge provides the most practicable and effective method of pollution control and treatment. There will be, however, a minimal reduction of water quality under 18 AAC 70.015(a)(2)(A).

8.4.2.1.4 Uncontaminated Ballast Water (Discharge 010)

Ballast water discharged during setting the legs of the MODU originates from Cook Inlet and is stored in dedicated tanks that do not contain contaminants. Hence, the discharge has the same water quality as the surrounding receiving water and does not lower the water quality. An alternative analysis is not necessary in this instance.

8.4.2.1.5 Excess Cement Slurry (Discharge 012)

Excess cement slurry is an intermittent discharge that generally occurs less than four times during the drilling operations for a new oil and gas well. The maximum daily volume discharged for 012 since January 2011 between four Cook Inlet platforms (Grayling, Steelhead, Monopond, and Anna) was 17,346 gal. The average discharge during that period was 3,706 gal.

Mixing zone modeling done for the AKG315200 Draft General Permit at actual volume ranges showed this discharge will meet the applicable water quality criteria well within the boundary of the requested 100-meter-radius mixing zone.

A possible alternative would be to collect the excess cement slurry and ship it to shore for disposal. The projected cost to collect, containerize, and ship to shore would be between $10,000 and $65,000 per well. Taking into account low bioavailability of cement slurry and the lack of chronic toxicity, the cost of hauling to shore is not commensurate with the environmental benefits.

Considering the ability of the discharge to meet water quality standards at the boundary of the authorized 100-m mixing zone, and the minimal benefits and high cost collection and disposal on shore, the Department has determined that discharge provides the most practicable and effective method of pollution control and treatment. There will be, however, a minimal reduction of water quality under 18 AAC 70.015(a)(2)(A).Basis for Reduction of Water Quality

Based on the above finding, the Department can authorize a reduction in water quality only after the applicant has submitted evidence in accordance with the following requirements under 18 AAC 70.015(a)(2)(A – D):

8.4.2.2 Accommodation of Important Social or Economic Develop in the Vicinity

> *(A) Allowing lower water quality is necessary to accommodate important economic or social development in the area where the water is located.*

The *Revenue Source Book Fall 2020* published by the Tax Division of the State of Alaska Department of Revenue reported that Alaska's oil and gas industry is still the single largest source of state government revenue (excluding investment revenue). Key points made in that report include:

- In Fiscal Year 2020, 24% of the state's unrestricted revenue was provided directly by the oil and gas industry. Approximately $600 million of additional restricted revenue comes from royalties and other payments that to the Permanent Fund, Constitutional Budget Reserve Fund, and Public School Trust fund.
- The petroleum industry provided $1.1 million dollars in unrestricted general fund tax revenue in fiscal year 2020.

The November 2, 2018 Final Finding of the Director for Cook Inlet Areawide Oil and Gas Lease Sale, prepared by the Alaska Department of Natural Resources, Division of Oil and Gas, included the following information pertinent to the oil and gas industry in Cook Inlet.

- More than 4,235 jobs are estimated to be created indirectly or induced by the oil and gas sector in the Kenai Peninsula alone.
- About 810 residents in the Kenai Peninsula Borough are employed directly with the oil and gas industry.
- The oil and gas industry offers relatively high-paying jobs, which pay about 2.6 times more than the statewide average wage.
- Southcentral Alaska has relied on Cook Inlet as its sole source of natural gas for more than 50 years. This natural gas is the fuel source for over 70 percent of all electricity generated in the railbelt region.

HAK intends to invest approximately $35 million on the Platform production drilling work proposed for 2021. Approximately two-thirds of that will remain in the Kenai area, including employment of an additional 40 to 60 workers during drilling operations.

HAK's efforts may lead to the development of increased production of affordable oil and gas for Alaskans in the Cook Inlet region. The company has expanded their operations since their appearance in 2012, adding five platforms and one on-shore facility to their original holdings in Cook Inlet. HAK maintains almost 1,470 full-time employees in Alaska, approximately 150 of whom support operation in the Cook Inlet area.

Oil and gas produced in Cook Inlet helps to keep operations viable and products flowing. The company acknowledges their role in helping to reinvigorate the local service industry in the Cook Inlet area, and strives to provide a reliable source of oil and natural gas to meet local demand and allow for social and economic growth.

The Department finds the requirements of this part of the antidegradation analysis have been met.

8.4.2.3 Reducing Water Quality Will Not Violate Applicable Criteria

(B) *Except as allowed under this subsection, reducing water quality will not violate the applicable criteria of 18 AAC 70.020 or 18 AAC 70.235 or the whole effluent toxicity limit in 18 AAC 70.030.*

18 AAC 70.15(a)(2) specifically allows the reduction of water quality under certain limited circumstances, including a mixing zone, a zone of deposit, and a short-term variance.

DEC authorizes a 35-meter radius, cylindrical chronic mixing zone and 18-meter radius, cylindrically shaped acute mixing zone for Discharge 004 – Graywater for TRC. The discharge of the treated graywater from the MODU will be chlorinated specifically to prevent exceedances of bacteria criteria and will be subject to a TBEL MDL of 1.0 mg/L at the point of discharge. A standard 100-meter radius, cylindrically shaped chronic mixing zone is authorized for Noncontact Cooling Water (Discharge 009) for chronic toxicity and temperature. Additionally, standardized 100-meter radius, cylindrically shaped chronic mixing zones are authorized for Blowout Preventer Fluid (Discharge 006), noncontact cooling water (Discharge 009), uncontaminated ballast water (Discharge 010), and Excess Cement Slurry (Discharge 012). All mixing zones authorized by DEC under the Permit have been appropriately sized such that applicable water quality criteria will be met at the respective mixing zone boundaries to ensure that the quality of the waterbody as a whole is protected and maintained (See Section 4.3.4).

Site-specific criteria, as allowed by 18 AAC 70.235, have not been established in the vicinity of the discharge in Cook Inlet and is therefore not applicable. As this is the first issuance of the Permit, information is not currently available to establish chronic toxicity limits per 18 AAC 70.030 and

18 AAC 83.435(f). However, where chronic toxicity must be controlled to ensure water quality criteria is met at the boundary of authorized mixing zones, a combination of source control BMPs and pollution reduction action levels, coupled with chronic WET monitoring requirements, are required by the Permit. Accordingly, if the terms of the Permit are followed, violations of marine water quality criteria in 18 AAC 70.020 will not occur.

The Department finds that the requirements of this part of the antidegradation analysis have been met.

8.4.2.4 Tier 1 Protection of Existing Uses

(C) *The resulting water quality will be adequate to fully protect existing uses of the water.*

As discussed in part (B) of the preceding Tier 1 analysis, marine waters are protected for all uses and all water quality criteria developed to protect these uses are met at the boundary of the chronic mixing zone for produced water. Hence, this finding has been met.

8.4.2.5 All Wastes and Other Substances Discharged Will be Treated and Controlled

(D) All wastes and other substances discharged will be treated and controlled to achieve (i) for new and existing point sources, the highest statutory and regulatory requirements...

The applicable "highest statutory and regulatory treatment requirements" are defined in 18 AAC 70.015(d). The definition includes the four components noted below:

Any federal TBEL identified in 40 CFR 125.3 and 40 CFR 122.29, revised as of July 1, 2017 and adopted by reference;

The first part of the definition predominantly includes all applicable federal ELGs, as found in 40 CFR Part 435 Subpart D – Coastal Subcategory, adopted by reference at 18 AAC 83.010(g)(3). The Permit implements the more stringent ELGs among the BPT, the BAT, and the BCT for the oil and gas extraction coastal subcategory. Per Sections 5.2.1 and 6.1.2, TBELs based on ELGs have been established Graywater (Discharge 004) per the Coastal Subcategory of 40 CFR 435.43.

In the absence of specific ELGs for waste streams, limitations and related requirements may be established using case-by-case BPJ. Per Sections 5.3.1 and 6.1.4, the Department has developed case-by-case TBELs using BPJ for limiting TRC in Graywater (Discharge 004) and considered no discharge of free oil in Blowout Preventer Fluid (Discharge 006), Uncontaminated Ballast Water (Discharge 010), and Excess Cement Slurry (Discharge 012). However, the TBEL of no free oil was replaced with a more stringent WQBEL for oil and grease (sheen).

(1) Any minimum treatment standards in 18 AAC 72.050;

Per 18 AAC 72.050(a)(4) domestic wastewater discharges into the waters of the US must have received secondary treatment prior to discharge. The Permit only authorizes discharges of graywater after DEC issues a waiver to the minimum treatment standards. The Spartan 151 has successfully obtained a waiver for secondary treatment from DEC, which meets the intent of 18 AAC 72.050.

(2) any treatment requirements imposed under another state law that is more stringent than a requirement of this chapter; and

This part of the definition includes any treatment required by state law that is more stringent than 18 AAC 70. Other regulations beyond 18 AAC 70 that may apply to this permitting action include 18 AAC 15 and 18 AAC 83. The Permit is consistent with 18 AAC 83 and neither the regulations in

18 AAC 15, nor any other state legal requirement that the Department is aware of, impose more stringent treatment requirements than 18 AAC 70. Therefore, this part of the definition is met.

> *(3) any water quality-based effluent limitations established in accordance with 33 USC 1311(b)(1)(C)(Clean Water Act, sec. 301(b)(1)(C).*

Alaska water quality criteria are presented in 18 AAC 70.020 and the *Water Quality Criteria for Toxics and Other Deleterious Substances*, amended through December 12, 2008 (*Toxics Manual*). WQBEL limits have been established to be more stringent than applicable TBELs per the a *Reasonable Potential Analysis and Effluent Limits Development Guide*, June 30, 2014 (*RPA/WQBEL Guidance*), which complies with 18 AAC 83.435 and CWA 301(b)(1)(C).

Water quality criteria per 18 AAC 70.020(17) requires that there be no concentrations of petroleum hydrocarbons, animal fats, or vegetable oils and that surface waters be free from floating oil, film, sheen or discoloration. Accordingly, The Permit includes a narrative WQBEL for oil and grease (visible sheen) in graywater, blowout preventer fluid, uncontaminated ballast water, and excess cement slurry discharges and specific BMPs to help ensure oil and grease is controlled appropriately at the source. Therefore, this part of the definition has been met.

8.4.3 Antidegradation Analysis Conclusion

Based on each of the four individual findings being met, DEC authorizes lowering of the water quality in the vicinity of the Platform site by the discharges under the Permit.

9 OTHER PERMIT CONDITIONS

9.1 Standard Permit Provisions

Permit Appendix A of the Permit contains standard regulatory language that must be included in all APDES permits. These requirements are based on the regulations and cannot be challenged in the context of an individual APDES permit action. The standard regulatory language covers requirements such as monitoring, recording, reporting requirements, compliance responsibilities, signatory authority, and other general requirements.

9.2 Quality Assurance Project Plan

The permittee is required to develop and implement a facility-specific QAPP that ensures all monitoring data associated with the Permit are accurate and to explain data anomalies if they occur. The permittee is required to develop and implement procedures in a QAPP that documents standard operating procedures the permittee must follow for collecting (e.g., noncontact cooling water sample collection for chronic WET analysis), handling, storing and shipping samples; laboratory analysis (e.g., most sensitive methods); and data reporting. If a QAPP has already been developed and implemented, the permittee must review and revise the existing QAPP to ensure it includes the necessary content. The permittee must submit a letter to the Department prior to discharging or within 90 days of the effective date of the Permit certifying that the QAPP has been revised and implemented. The QAPP shall be retained onsite and made available to the Department upon request.

9.3 Best Management Practices Plan

A Best Management Practices Plan (BMP Plan) presents operating and housekeeping measures intended to minimize or prevent the generation and potential release of pollutants from a facility to the waters of the U.S. during normal operations and additional activities. Per 18 AAC 83.475(4), “A

permit must include best management practices to control or abate the discharge of pollutants and hazardous in a permit when the practices are reasonably necessary to achieve effluent limitations and standards…"

Within 90 days of the effective date of the Permit, the permittee must review, revise as necessary, implement the BMP Plan to address current activities at the terminal and submit written certification of the review, revision and implementation to DEC.

In each subsequent year of the Permit, the permittee must establish a committee to review and revise the BMP Plan as necessary to address any modifications or changes to operational practices at the terminal and to continue to meet the objectives and specific requirements of the Permit. The permittee must submit written certification to DEC that the BMP Plan review committee has reviewed the BMP Plan, and modified if necessary, by January 31st of each year the Permit remains in effect.

9.3.1 Specific BMP Requirements

In addition to the standard BMP components, DEC requires the following specific BMPs be included in the BMP Plan for the applicable discharges.

9.3.1.1 BMPs for Graywater

Per Section 6.1.3, permittees shall develop and implement housekeeping BMPs which ensure discharges do not contain oil (e.g., cook oils), floating solids, foam or garbage and have minimal chemical cleaning compounds and disinfection products (e.g., chlorine) through adherence with manufacturer's instructions. In addition, for discharges of graywater treated using an MSD, or other system adding chlorine, the permittee must develop and implement operation and maintenance BMPs that ensure consistent and effective dechlorination to achieve appropriate chlorine levels (e.g., less than 1.0 mg/L).

9.3.1.2 BMPs for Blowout Preventer Fluid

Per Section 6.1.3, permittees shall develop and implement specific BMPs to support the prohibition of free oil (sheen) for Blowout Preventer Fluid (Discharge 006). The permittee should also address specific chemical usage and constituents of the blowout preventer fluid in a BMP. The permittee should aim to minimize and use less toxic chemicals (e.g., antifreeze solution) and oil component (e.g., vegetable or mineral) while still meeting Alaska Oil and Gas Conservation Commission industry requirements and American Petroleum Commission Recommended Practice No. 53 for blowout preventer fluid.

9.3.1.3 BMPs for Uncontaminated Ballast Water

Specific BMPs must be developed and implemented to support the prohibition of free oil for Uncontaminated Ballast Water (Discharge 010). The permittee must ensure that ballast water contaminated with oil and grease is processed through an oil-water separator, or similar process, prior to discharge.

9.3.1.4 BMPs for Excess Cement Slurry

Per Section 6.1.3, permittees shall develop and implement specific BMPs to support the prohibition of free oil (sheen) for Excess Cement Slurry (Discharge 012). The permittee must ensure that excess cement slurry is kept from being contaminated with oil and grease prior to discharge.

9.3.1.5 BMPs for Noncontact Cooling Water

Per Section 6.2.3, DEC requires that the BMP Plan include a specific BMP to optimize the use of chemicals (e.g., a chemical-dosing matrix) and to minimize the potential for chronic toxicity in discharges of noncontact cooling water (Discharge 009) that are required to monitor for chronic WET. Upon exceeding the chronic WET PR BMP Revision Action Level, the permittee must modify this specific BMP to include BMP revisions to reduce subsequent chronic toxicity to below the PR BMP Revision Action Level (See Section 6.2.4). Examples of BMP revisions include, but are not limited to, revamping the chemical dosing matrix or injection practices; substitution of less toxic chemicals; eliminating, reducing, or controlling spikes resulting from batch dosing; or alternative disposal options. BMPs must continue to be revised until the chronic WET PR BMP Revision Action Level is attained.

9.3.1.6 Cooling Water Intake Structure Requirements

The Permit incorporates 40 CFR Part 125, Subpart N the updated in 2014 and adopted by reference at 18 AAC 83.010(c)(9) for cooling water intake structures (CWIS) that requires new offshore oil and gas facilities to take measures to reduce entrainment and impingement of aquatic life associated with the construction and operation of CWIS. The CWIS regulation was promulgated to ensure that the location, design, construction, operation and capacity of CWIS reflect the best technology available to minimize adverse impacts to aquatic organisms.

The CWIS regulations apply to all facilities, new or existing, that are a point source discharge, intake 2 million gallons per day of water, and use at least 25 percent of that water for cooling. Per CWIS regulations, the owner or operator of a new offshore oil and gas extraction facility must comply with: (i) Track I in 40 CFR Part 125.134(b) or Track II in 40 CFR Part 125.134(c) if it is a fixed facility; or (ii) Track I in 40 CFR Part 125.134(b) if it is not a fixed facility (i.e., MODU).

The Permit requires the permittee to select and implement technologies or operational measures to minimize impingement mortality and entrainment of fish and shellfish and include this information in the BMP Plan. The BMP Plan requirement gives the permittee discretion on what methods to select and how to implement those methods. However, the Department retains the authority to impose more stringent conditions on a case-by-case basis, if such conditions are deemed necessary by the Department to comply with any provision of law in accordance with the Permit. Specifically, DEC can require the implementation of additional technologies and operational measures if there is information indicating the potential for specified aquatic organisms to pass through the hydraulic zone of influence of the MODU cooling water intake structure.

9.4 Termination Notification

DEC may terminate coverage under an APDES permit for the reasons described in 18 AAC 83.140 using the procedures provided in 18 AAC 83.130. If a permittee desires to terminate coverage, the Permit requires the permittee to provide notice of termination (NOT) to DEC within 30 days following cessation of discharges. The notice must include certification that the facility is not subject to an enforcement action or citizen suit. The notice must also include any final reports required by the Permit.

10 OTHER LEGAL REQUIREMENTS

10.1 Endangered Species Act

Per Section 7 of the Endangered Species Act (ESA), federal agencies are required to consult with National Oceanic and Atmospheric Administration (NOAA), National Marine Fisheries Service

(NMFS) and the U.S. Fish and Wildlife Service (FWS) if their actions could beneficially or adversely affect any threatened or endangered species. As a state agency, DEC is not required to consult under Section 7 regarding wastewater discharge permitting actions. However, this does not absolve DEC from complying with Section 9 and 10 of the ESA. Therefore, the Permit emphasizes that the Permit does not absolve the permittee from securing approvals from other authorities having jurisdiction (e.g., obtaining incidental take or harassment authorizations).

DEC voluntarily sent an email to both the FWS and NOAA Fisheries on April 2, 2021 notifying the agencies of current permit development activities and requesting information regarding the presence of threatened or endangered species and their critical habitat in the vicinity of the Tyonek Platform. In response, NOAA Fisheries Protected Resources Division referred the Department to the Alaska Endangered Species and Critical Habitat Mapper web application and to their website for detailed information regarding endangered species and critical habitat designations. FWS referred the Department to its Information, Planning, and Conservation (IPaC) System internet tool.

DEC accessed the NOAA web application which identified the Cook Inlet beluga whale (*Delphinapterus leucas*) population to be the only listed endangered species with distribution range within the waters adjacent to the facility. While all beluga whale populations are protected under the Marine Mammal Protection Act (MMPA), NOAA Fisheries has also designated the Cook Inlet beluga whale population as depleted under the MMPA. Of the five stocks of beluga whales in Alaska, the Cook Inlet population is the most isolated stock, spending the entire year in Cook Inlet and the majority of the time in the northern portion of Cook Inlet. The critical habitat areas for Cook Inlet beluga whales are prioritized according to levels of sensitivity and are designated as Area 1 or Area 2. Area 1 has the highest concentrations of beluga whales from spring through fall as well as the greatest potential for adverse impact from anthropogenic threats. Area 2 has less concentrated spring and summer beluga whale use but is known to be dispersed fall and winter feeding and transit areas in waters where whales typically occur in smaller densities or deeper waters. The NOAA web application was also used to determine that the designated critical habitat Area 2 for the Cook Inlet Beluga Whale overlaps the waters surrounding the facility.

DEC accessed the FWS IPaC internet tool at https://ecos.fws.gov/ipac/location. The Department used this website to gain an approximate determination that the area encompassing the facility does not overlap with the range or area of influence for any listed threatened or endangered species under the jurisdiction of FWS.

10.2 Essential Fish Habitat

Essential fish habitat (EFH) is defined by textual descriptions contained in the fishery management plans developed by the regional Fishery Management Councils and includes waters and substrate (sediments, etc.) necessary for fish from commercially fished species to spawn, breed, feed, or grow to maturity. The Magnuson-Stevens Fishery Conservation and Management Act (January 21, 1999) requires federal agencies to consult with NOAA Fisheries when a proposed discharge has the potential to adversely affect (reduce quality and/or quantity of) EFH. As a State agency, DEC is not required to consult with federal agencies regarding EFH. DEC did; however, voluntarily send an email request to NOAA Fisheries on April 2, 2021 notifying the agency of current permit development activities and requesting EFH listings in the vicinity of the Tyonek Platform. In response, NOAA Fisheries referred DEC to the EFH information available through its Alaska EFH Mapper tool and to their website for Fisheries Management Plans.

The Alaska EFH Mapper tool is located at https://www.fisheries.noaa.gov/resource/map/alaska-essential-fish-habitat-efh-mapper. The tool reported groundfish EFH for the Alaska plaice

(*Pleuronectes quadrituberculatus*), flathead sole (*Hippoglossoides elassodon*), walleye pollock (*Gadus chalcogrammus*), yellowfin sole (*Limanda aspera*), Dover sole (*Microstomus pacificus*), northern rock sole (*Lepidopsetta polyxystra*), Pacific cod (*Gadus macrocephalus*), rex sole (*Glyptocephalus zachirus*), southern rock sole (*Lepidopsetta bilineata*). The tool also identified EFH in the vicinity of the discharge for five species of Pacific salmon (*Oncorhynchus spp*): Chinook (*O. tshawytscha*), Sockeye (*O. nerka*), Coho (*O. kisutch*), Pink (*O. gorb*uscha), and Chum (*O. keta*). Habitat areas of particular concern (HAPCs) are specific sites within EFH that are of particular ecologic importance to the long-term sustainability of managed species, are of a rare type, or are especially susceptible to degradation or anthropogenic development. HAPCs are meant to provide greater focus to conservation and management efforts and may require additional protection from adverse effects. There were, however, no HAPCs identified within these EFHs."

10.3 Ocean Discharge Criteria Evaluation

CWA Section 403(a), Ocean Discharge Criteria, prohibits the issuance of a permit under CWA Section 402 for a discharge into the territorial sea, the water of the contiguous zone, or the oceans except in compliance with Section 403. Permits for discharges seaward of the baseline on the territorial seas must comply with the requirements of Section 403, which include development of an Ocean Discharge Criteria Evaluation (ODCE).

The Permit requires compliance with Alaska WQS. Consistent with 40 CFR 125.122(b), adopted by reference at 18 AAC 83.010(C)(8), discharges in compliance with Alaska WQS shall be presumed not to cause unreasonable degradation of the marine environment. EPA made the connection between the similar protections provided by ODCE requirements and WQS when promulgating ocean discharge criteria rules in 1980, as stated, "the similarity between the objectives and requirements of [state WQS] and those of CWA Section 403 warrants a presumption that discharges in compliance with these [standards] also satisfy CWA Section 403." (Ocean Discharge Criteria, 45 Federal Register 65943). As such, given the Permit requires compliance with Alaska WQS, unreasonable degradation to the marine environment is not expected and further analysis under 40 CFR 125.122 is not warranted for this permitting action.

10.4 Permit Expiration

The Permit will expire five years from the effective date.

11 REFERENCES

18 AAC 70. Water Quality Standards, as amended through June 26, 2003.

18 AAC 70. Water Quality Standards, as amended through July 1, 2008.

18 AAC 70. Water Quality Standards, as amended through April 8, 2012.

18 AAC 70. Water Quality Standards, as amended through February 19, 2016.

18 AAC 70. Water Quality Standards, as amended through April 6, 2018

18 AAC 70. Water Quality Standards, as amended through March 5, 2020

18 AAC 72. Wastewater Disposal, as amended through December 23, 2009.

18 AAC 83. Alaska Pollutant Discharge Elimination System Program. As amended Through October 23, 2008.

Alaska Department of Environmental Conservation, 2008. Alaska Water Quality Criteria Manual for Toxics and Other Deleterious Organic and Inorganic Substances, as amended through December 12, 2008.

ADR Department of Revenue. Fall 2018 Revenue Sources Book. December 14, 2018

DEC 2015. Mobile Oil and Gas Exploration in Cook Inlet in State Waters ODCE – AKG315100

DEC 2019. Public Review Draft, Cook Inlet General Permit – AKG315200

DEC 2020. Alaska's Final 2020 Integrated Water Quality Monitoring and Assessment Report, May 17, 2020.

EPA 1992d. U.S. EPA, Region 10. Region 10 Guidance: Best Management Practices Plans in NPDES Permits. Prepared by Water Division, Wastewater Management and Enforcement Branch, Seattle, WA. June 1992.

EPA 1993a. Development Document for Effluent Limitations Guidelines and Standards for the Offshore Subcategory of the Oil and Gas Extraction Point Source Category (Final). Office of Water, EPA #921-R-93-003. U.S. EPA, Washington DC. January 1993.

EPA 1993b. 40 CFR PART 435. Oil and Gas Extraction Point Source Category Offshore Subcategory Effluent Guidelines and New Source Performance Standards Final Rule. 48 Federal Register 1254, March 4, 1993.

EPA 1996. EPA Effluent Limitation Guidelines for Oil and Gas Facilities. 40 CFR 435

CIRCAC 1997. Final Report – 1996, Cook Inlet Shelikof Strait Project, Prepared by Kinnetic Laboratories Incorporated for Cook Inlet Resource Conservation Advisory Board, December 1997

CIRCAC 1998. Final Report – 1997 Cook Inlet Sediment Toxicity and Hydrocarbon Study, Prepared by Kinnetic Laboratories Incorporated for Cook Inlet Resource Conservation Advisory Board, June 1998

FWS 2014. Marine Mammal Protection Act; Stock Assessment Reports. Federal Register Vol 79, April 4, 2014, pages 22154-9.

Kinnetic Laboratories Incorporated (KLI) 2010. Produced Water Report Produced Water Discharge Fate and Transport in Cook Inlet, 2008-2009: NPDES Permit No. AKG-31-5000. US Environmental Protection Agency

KLI. 2007. Current and Suspended Sediment Investigation, Knik Arm – Cook Inlet, Alaska. Data Report. Prepared by Kinnetic Laboratories, Inc. Prepared for Knik Arm Bridge and Toll Authority, HDR Alaska, Inc., and URS Corporation.

NOAA 2014. Circulation Survey of Cook Inlet from June 14, 2012 to August 17, 2012. US Department of Commerce, National Oceanic and Atmospheric Administration, National Ocean Service, Center for Operational Oceanographic Products and Service.

NOAA 2016. Recovery Plan for the Cook Inlet Beluga Whale (*Delphinapterus leucas*). National Marine Fisheries, National Oceanic and Atmospheric Administration, NOAA Fisheries, December 2016.

NOAA 2017. NOAA Habitat Conservation – National Marine Fisheries Service: Habitat Protection. Essential Fish Habitat Mapper, accessed February 21, 2017: http://www.habitat.noaa.gov/protection/efh/efhmapper/index.html

Okkonen and Howell 2003. Measurements of Temperature, Salinity, and Circulation in Cook Inlet, Alaska. Okkonen, Stephen R. and Howell, Stephen S., Institute of Marine Science, University of Alaska, Fairbanks and Cook Inlet Regional Citizens Advisory Council. October, 2003.

Okkonen, S., S. Pegau and S. M. Saupe. 2009. Seasonality of Boundary Conditions for Cook Inlet, Alaska Final Report. OCS Study MMS 2009-041, University of Alaska Coastal Marine Institute, University of Alaska, Fairbanks and USDOI, MMS, Alaska OCS Region.

Parametrix 2017. Supplemental Mixing Zone Study for Cook Inlet Oil and Gas Production Facilities. March 31, 2017

ATTACHMENT 1. MIXING ZONE AUTHORIZATION CHECKLIST

based on Alaska Water Quality Standards (2006)

The purpose of the Mixing Zone Checklist is to guide the permit writer through the mixing zone regulatory requirements to determine if all the mixing zone criteria presented in the Alaska Administrative Code (AAC) at 18 AAC 70.240 are satisfied, as well as provide justification to authorize a mixing zone in an Alaska Pollution Discharge Elimination System permit. In order to authorize a mixing zone, all criteria must be met. The permit writer must document all conclusions in the permit Fact Sheet. However, if the permit writer determines that one criterion cannot be met, then a mixing zone is prohibited, and the permit writer need not include in the Fact Sheet the conclusions for when other criteria were met.

Criteria	Description	Resources	Regulation	Mixing Zone Approved Y/N
Size	Is the mixing zone as small as practicable? - Applicant collects and submits water quality ambient data for the discharge and receiving waterbody (e.g. flow and flushing rates)	Yes •Technical Support Document for Water Quality Based Toxics Control •Water Quality Standards Handbook • DEC's RPA Guidance • EPA Permit Writers' Manual Fact Sheet Sections 4.3 and 4.3.2	18 AAC 70.240 (k)	Y

Technology	Were the most effective technological and economical methods used to disperse, treat, remove, and reduce pollutants? **If yes**, describe methods used in Fact Sheet Mixing Zone Analysis. Attach additional documents if necessary.	Yes Fact Sheet Section 4.3.3	18 AAC 70.240 (c)(1)	Y
Low Flow Design	**For river, streams, and other flowing fresh waters.** Determine low flow calculations or documentation for the applicable parameters. Justify in Fact Sheet	N/A – Marine Discharge	18 AAC 70.240(l)	
Existing use	Does the mixing zone…			
	(1) partially or completely eliminate an existing use of the waterbody outside the mixing zone? **If yes, mixing zone prohibited.**	No Fact Sheet Section 4.3.4	18 AAC 70.240(c)(2)	Y
	(2) impair overall biological integrity of the waterbody? **If yes, mixing zone prohibited.**	No Fact Sheet Sections 4.3.4 and 4.3.8.	18 AAC 70.240(c)(3)	Y
	(3) provide for adequate flushing of the waterbody to ensure full protection of uses of the waterbody outside the proposed mixing zone?	Yes Fact Sheet Section 4.3.4	18 AAC 70.240(b)(1)	Y

	If no, then mixing zone prohibited.			
	(4) cause an environmental effect or damage to the ecosystem that the Department considers to be so adverse that a mixing zone is not appropriate? **If yes, then mixing zone prohibited.**	No Fact Sheet Section 4.3.8	18 AAC 70.240(m)	Y
Human consumption	Does the mixing zone…			
	(1) produce objectionable color, taste, or odor in aquatic resources harvested for human consumption? **If yes, mixing zone may be reduced in size or prohibited.**	No Fact Sheet Section 4.3.5 and non-toxic requirements for discharges	18 AAC 70.240(d)(6)	Y
	(2) preclude or limit established processing activities of commercial, sport, personal use, or subsistence shellfish harvesting? **If yes, mixing zone may be reduced in size or prohibited.**	No Fact Sheet Section 4.3.5 and non-toxic requirements for discharges	18 AAC 70.240(c)(4)(C)	Y
Spawning Areas	Does the mixing zone…			

	(1) discharge in a spawning area for anadromous fish or Arctic grayling, northern pike, rainbow trout, lake trout, brook trout, cutthroat trout, whitefish, sheefish, Arctic char (Dolly Varden), burbot, and landlocked coho, king, and sockeye salmon? **If yes, mixing zone prohibited.**	No Fact Sheet Section 4.3.6 and non-toxic requirements for discharges	18 AAC 70.240 (e) and (f)	Y
Human Health	Does the mixing zone…			
	(1) contain bioaccumulating, bioconcentrating, or persistent chemical above natural or significantly adverse levels? **If yes, mixing zone prohibited.**	No Fact Sheet Section 4.3.7	18 AAC 70.240 (d)(1)	Y
	(2) contain chemicals expected to cause carcinogenic, mutagenic, tetragenic, or otherwise harmful effects to human health? **If yes, mixing zone prohibited.**	No Fact Sheet Section 4.3.7	18 AAC 70.240 (d)(2)	Y
	(3) Create a public health hazard through encroachment on water supply or through contact recreation? **If yes, mixing zone prohibited.**	No Fact Sheet Section 4.3.7	18 AAC 70.240(c)(4)(C)	Y

	(4) meet human health and aquatic life quality criteria at the boundary of the mixing zone? **If no, mixing zone prohibited.**	Yes Fact Sheet Section 4.3.7	18 AAC 70.240 (c),(4)(A)	Y
	(5) occur in a location where the Department determines that a public health hazard reasonably could be expected? **If yes, mixing zone prohibited.**	No Fact Sheet Section 4.3.7	18 AAC 70.240(c)(4)(B)	Y

Aquatic Life	Does the mixing zone…			
	(1) create a significant adverse effect to anadromous, resident, or shellfish spawning or rearing? **If yes, mixing zone prohibited.**	No Fact Sheet Section 4.3.6	18 AAC 70.240(e) and (f)	Y
	(2) form a barrier to migratory species? **If yes, mixing zone prohibited.**	No Fact Sheet Section 4.3.6	18 AAC 70.240(c)(4)(G)	Y
	(3) fail to provide a zone of passage? **If yes, mixing zone prohibited.**	No Fact Sheet Section 4.3.2		Y
	(4) result in undesirable or nuisance aquatic life? **If yes, mixing zone prohibited.**	No Fact Sheet Section 4.3.8	18 AAC 70.240(d)(5)	Y
	(5) result in permanent or irreparable displacement of indigenous organisms? **If yes, mixing zone prohibited.**	No Fact Sheet Section 4.3.8	18 AAC 70.240(c)(4)(E)	Y

	(6) result in a reduction in fish or shellfish population levels? **If yes, mixing zone prohibited.**	No Fact Sheet Section 4.3.8	18 AAC 70.240(c)(4)(D)	Y
	(7) prevent lethality to passing organisms by reducing the size of the acute zone? **If yes, mixing zone prohibited.**	No Fact Sheet Section 4.3.2 and 4.3.8	18 AAC 70.240(d)(7)	Y
	(8) cause a toxic effect in the water column, sediments, or biota outside the boundaries of the mixing zone? **If yes, mixing zone prohibited.**	No Fact Sheet Section 4.3.8	18 AAC 70.240(c)(4)(A)	Y
Endangered Species	Are there threatened or endangered (T/E species) at the location of the mixing zone?If yes, are there likely to be adverse effects to T/E species based on comments received from United States Fish & Wildlife Service or National Oceanic & Atmospheric Administration. If yes, will conservation measures be included in the permit to avoid adverse effects? **If yes, explain conservation measures in Fact Sheet. If no, mixing zone prohibited.**	Yes Fact Sheet Sections 4.3.9 and 10.1.	Program Description, 6.4.1 #5 18 AAC 70.240(c)(4)(F)	Y