ALASKA POLLUTANT DISCHARGE ELIMINATION SYSTEM

PERMIT FACT SHEET – PRELIMINARY DRAFT

Permit Number: AK0021245

Homer Wastewater Treatment Facility

ALASKA DEPARTMENT OF ENVIRONMENTAL CONSERVATION
Wastewater Discharge Authorization Program
555 Cordova Street
Anchorage, AK 99501

Public Comment Period Start Date: DRAFT
Public Comment Period Expiration Date: DRAFT
Alaska Online Public Notice System

Technical Contact: Amber Bennett
Alaska Department of Environmental Conservation
Division of Water
Wastewater Discharge Authorization Program
610 University Ave
Fairbanks, Alaska 99709
(907) 451-2190
Fax: (907) 451-2187
amber.bennett@alaska.gov

Proposed issuance of an Alaska Pollutant Discharge Elimination System (APDES) permit to

CITY OF HOMER

For wastewater discharges from

Homer Wastewater Treatment Facility
3575 Heath Street
Homer, Alaska, 99603

The Alaska Department of Environmental Conservation (the Department or DEC) proposes to reissue an APDES individual permit to the City of Homer. The permit authorizes and sets conditions on the discharge of pollutants from this facility to waters of the United States. In order to ensure protection of water quality and human health, the permit places limits on the types and amounts of pollutants that can be discharged from the facility and outlines best management practices to which the facility must adhere.

This fact sheet explains the nature of potential discharges from the Homer Wastewater Treatment Facility and the development of the permit including:

- information on public comment, public hearing, and appeal procedures
- a listing of effluent limitations and other conditions
- technical material supporting the conditions in the permit
- monitoring requirements in the permit

Public Comment

Persons wishing to comment on or request a public hearing for the draft permit for this facility, may do so in writing by the expiration date of the public comment period.

Commenters are requested to submit a concise statement on the permit condition(s) and the relevant facts upon which the comments are based. Commenters are encouraged to cite specific permit requirements or conditions in their submittals.

A request for a public hearing must state the nature of the issues to be raised, as well as the requester's name, address, and telephone number. The Department will hold a public hearing whenever the Department finds, on the basis of requests, a significant degree of public interest in a draft permit. The Department may also hold a public hearing if a hearing might clarify one or more issues involved in a permit decision or for other good reason, in the Department's discretion. A public hearing will be held at the closest practicable location to the site of the operation. If the Department holds a public hearing, the Director will appoint a designee to preside at the hearing. The public may also submit written testimony in lieu of or in addition to providing oral testimony at the hearing. A hearing will be tape recorded. If there is sufficient public interest in a hearing, the comment period will be extended to allow time to public notice the hearing. Details about the time and location of the hearing will be provided in a separate notice.

All comments and requests for public hearings must be in writing and should be submitted to the Department at the technical contact address, fax, or email identified above (see also the public comments section of the attached public notice). Mailed comments and requests must be postmarked on or before the expiration date of the public comment period.

After the close of the public comment period and after a public hearing, if applicable, the Department will review the comments received on the draft permit. The Department will respond to the comments received in a Response to Comments document that will be made available to the public. If no substantive comments are received, the tentative conditions in the draft permit will become the proposed final permit.

The proposed final permit will be made publicly available for a five-day applicant review. The applicant may waive this review period. After the close of the proposed final permit review period, the Department will make a final decision regarding permit issuance. A final permit will become effective 30 days after the Department's decision, in accordance with the state's appeals process at 18 Alaska Administrative Code (AAC) 15.185.

The Department will transmit the final permit, fact sheet (amended as appropriate), and the Response to Comments to anyone who provided comments during the public comment period or who requested to be notified of the Department's final decision.

Appeals Process

The Department has both an informal review process and a formal administrative appeal process for final APDES permit decisions. An informal review request must be delivered within 20 days after receiving the Department's decision to the Director of the Division of Water at the following address:

Director, Division of Water
Alaska Department of Environmental Conservation
555 Cordova Street
Anchorage AK, 99501

Interested persons can review 18 AAC 15.185 for the procedures and substantive requirements regarding a request for an informal Department review.

See http://dec.alaska.gov/commish/review-guidance/informal-reviews for information regarding informal reviews of Department decisions.

An adjudicatory hearing request must be delivered to the Commissioner of the Department within 30 days of the permit decision or a decision issued under the informal review process. An adjudicatory hearing will be conducted by an administrative law judge in the Office of Administrative Hearings within the Department of Administration. A written request for an adjudicatory hearing shall be delivered to the Commissioner at the following address:

Commissioner
Alaska Department of Environmental Conservation
Mail: P.O. Box 11180
Juneau, AK 99811
In Person: 555 Cordova Street
Anchorage, AK 99501

Interested persons can review 18 AAC 15.200 for the procedures and substantive requirements regarding a request for an adjudicatory hearing. See http://dec.alaska.gov/commish/review-guidance/adjudicatory-hearing-guidance for information regarding appeals of Department decisions.

Documents are Available

The permit, fact sheet, application, and related documents can be obtained by visiting or contacting DEC between 8:00 a.m. and 4:30 p.m. Monday through Friday at the addresses below. The permit, fact sheet, application, and other information are located on the Department's Wastewater Discharge Authorization Program website: http://dec.alaska.gov/water/wastewater/.

Alaska Department of Environmental Conservation Division of Water Wastewater Discharge Authorization Program 555 Cordova Street Anchorage, AK 99501 (907) 269-6285	Alaska Department of Environmental Conservation Division of Water Wastewater Discharge Authorization Program **Mail**: P.O. Box 111800 **In Person**: 410 Willoughby Avenue, Suite 303 Juneau, AK 99811-1800 (907) 465-5180

TABLE OF CONTENTS

TABLES

FIGURES

APPENDICES

1.0 INTRODUCTION

1.1 Applicant

This fact sheet provides information on the Alaska Pollutant Discharge Elimination System (APDES) permit for the following entity:

Permittee:	City of Homer
Facility:	Homer Wastewater Treatment Facility
APDES Permit Number:	AK0021245
Facility Location:	3575 Heath Street, Homer, AK 99603
Mailing Address:	Same as facility location address
Facility Contact:	Mr. Todd Cook, Superintendent, (907) 235-3174

The map in Part 2.1, Figure 1 shows the location of the treatment plant and the location of the outfall. The process flow diagram in Part 2.1, Figure 2 illustrates the treatment process.

1.2 Authority

Section 301(a) of the Clean Water Act (CWA) and Alaska Administrative Code (AAC) 18 AAC 83.015 provide that the discharge of pollutants to water of the U.S. is unlawful except in accordance with an APDES permit. The individual permit reissuance is being developed per 18 AAC 83. A violation of a condition contained in the Permit constitutes a violation of the CWA and subjects the permittee of the facility with the permitted discharge to the penalties specified in Alaska Statutes (AS) 46.03.760 and AS 46.03.761.

1.3 Permit History

The deep-shaft activated sludge WWTF in Homer was built in the late 1980s. The United States Environmental Protection Agency (EPA) issued the first National Pollutant Discharge Elimination System (NPDES) permit to Homer Wastewater Treatment Facility authorizing domestic wastewater discharge in 1992. The NPDES permit was reissued by EPA on August 1, 2000, and subsequently expired on August 1, 2005. Authority for the permit transferred to the Alaska Department of Environmental Conservation (the Department or ADEC) upon delegation to the State to administer the NPDES program on October 31, 2008. ADEC reissued the Homer WWTF APDES permit which became effective November 9, 2010 and expired on November 8, 2015. DEC then reissued the permit on July 26, 2016. The permit became effective on September 1, 2016 and expired on August 31, 2021.

Under the Administrative Procedures Act and state regulations 18 Alaska Administrative Code (AAC) 83.155(c), an APDES permit may be administratively extended (i.e., continues in force and effect) provided that the permittee submits a timely and complete application for a new permit prior to the expiration of the current permit. A timely application for a new permit was submitted by the City of Homer on March 8, 2021; therefore, the 2016 permit is administratively extended until such time a new permit is reissued.

2.0 BACKGROUND

2.1 Facility Information

The Homer Wastewater Treatment Facility (WWTF), a Publicly Owned Treatment Works (POTW), is owned and operated by the City of Homer. The WWTF treats domestic wastewater from both the City of Homer and the nearby smaller community of Kachemak City. The facility also periodically accepts domestic wastewater at its recreational vehicle dumping station. The facility does not receive contributions from industrial users nor is the collection system combined with a storm sewer system. During this last permit cycle, the facility has undergone minor modifications in 2018 that included an upgrade to both their Programmable Logic Computer (PLC) and Supervisory Control and Data Acquisition system (SCADA) as well as a replacement of their

Heating Ventilation and Air Conditioning (HVAC) in the sewage treatment plant. There are no anticipated major modifications planned for the upcoming permit cycle.

Figure 1: Homer WWTF Vicinity Map

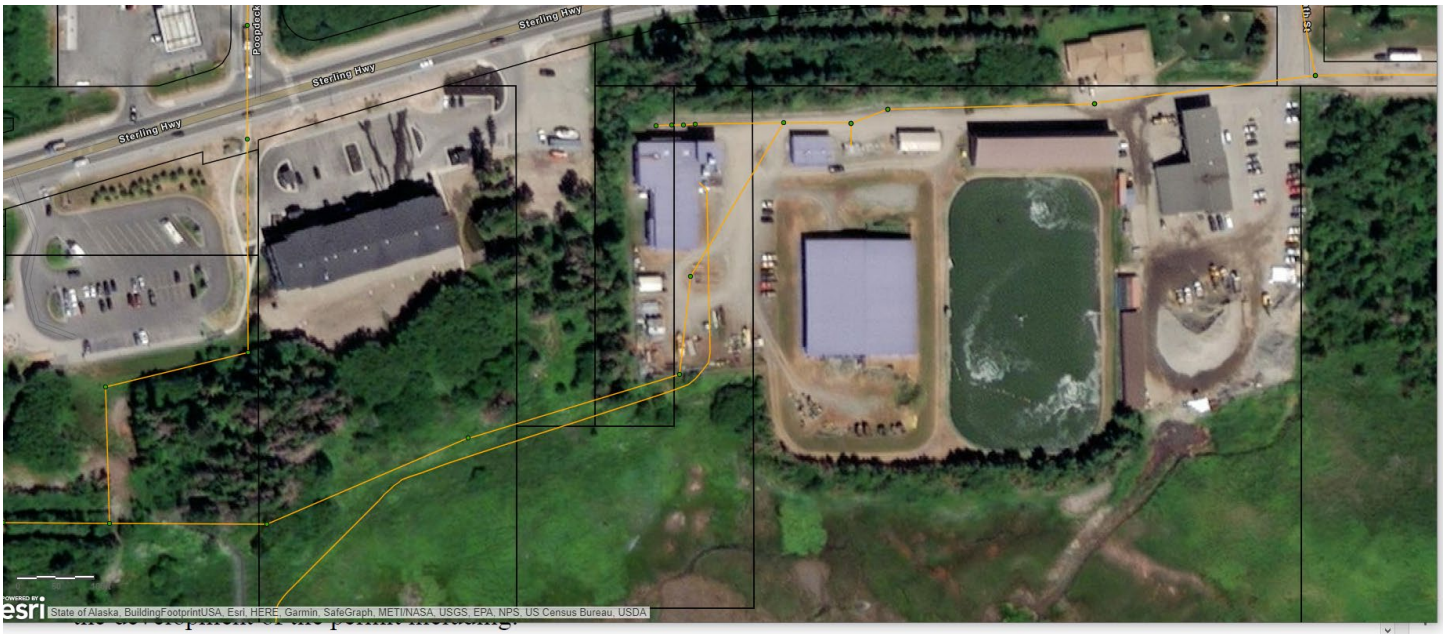

2.2 Wastewater Treatment

Wastewater is treated to secondary standards at the facility. The monthly design flow rate of the plant is 0.880 million gallons per day (mgd). Treatment at the facility consists of primary treatment, deep-shaft activated sludge, flotation clarifiers, an ultraviolet (UV) radiation disinfection chamber and a supplemental/back-up chlorination and dechlorination unit. The treated wastewater is then discharged to Kachemak Bay from Outfall 001 at approximately 2,178 feet (664 meters) offshore. Primary treatment at the plant consists of a mechanical bar screen and a grit chamber. The raw wastewater is then treated in two 30-inch diameter steel-cased shafts completed to depths of approximately 500 feet below surface. The deep-shaft activated sludge process uses the pressures associated with depth to create elevated levels of dissolved oxygen that are used by the biological population to provide treatment of the wastewater. After the wastewater passes through the shafts, it is separated from the remaining solids at the surface and transported to the disinfection area. The effluent is then passed through a UV radiation disinfection chamber. In the event that the UV system is not operating optimally, or the facility is receiving heavy flow volumes, chlorination and dechlorination is occasionally utilized to supplement the UV treatment prior to discharging the effluent to Kachemak Bay. The terminus of the 20-inch outfall pipe has been fitted with a diffuser containing four ports to facilitate mixing of the effluent at the point of discharge. Sludge from the treatment process is treated by aerobic digestion, stabilized in an aerated lagoon, and then freeze dried in beds in the winter. Final disposal of sludge is by land application. The facility serves a year-round population of approximately 5,922 Homer residents (United States (U.S.) Census Bureau 2019 estimate) and approximately 490 Kachemak City residents (U.S. Census Bureau 2018 estimate). However, visitors to the area during the fishing and tourism season can cause the population to increase significantly.

Table 1 summarizes average facility performance based on daily maximum values reported through DMRs submitted to DEC and NetDMR reports from September 2016 through February 2021.

Table 1: Average Plant Performance

Average Daily Flow Rate	.678 mgd
Maximum Daily Flow Rate	1.16 mgd
Average Biological Oxygen Demand, 5-day (BOD_5) Load:	75.05 lbs/day
Maximum Daily BOD_5 Load	158.86 lbs/day
Average Total Suspended Solids (TSS) Load:	58.49 lbs/day
Maximum Daily TSS Load	119.39 lbs/day
Average BOD_5 Percent Removal	93.5%
Average TSS Percent Removal	93.7%
Footnotes: Units: mgd = million gallons per day, lbs/day = pounds per day	

Figure 2: Homer WWTF Process Flow Diagram

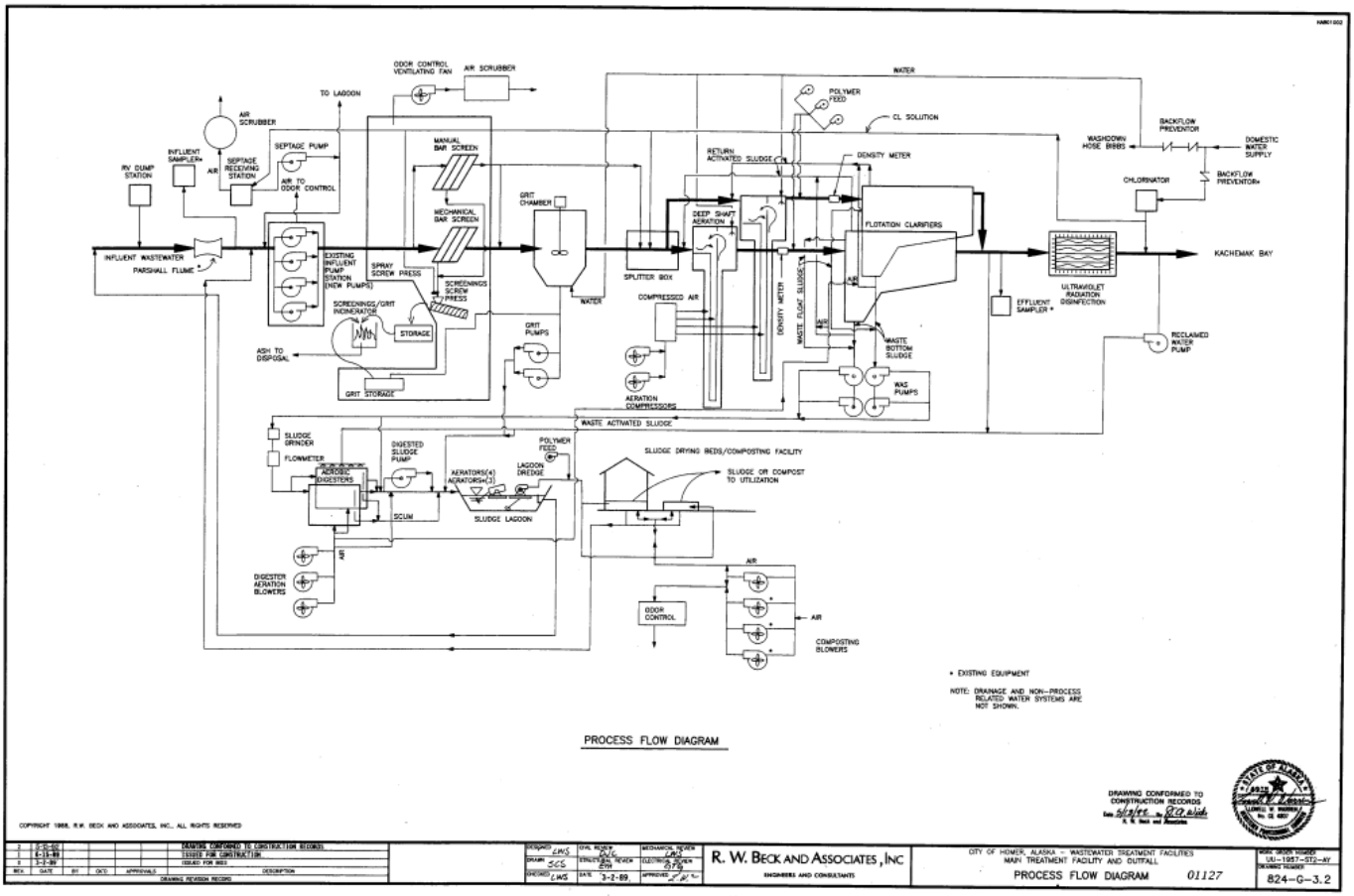

2.3 Pollutants of Concern

Pollutants of concern known to be present in the effluent of the Homer WWTF consist of domestic wastewater conventional pollutants regulated in the technology-based effluent limits (TBELs) via the secondary treatment standards, including biochemical oxygen demand (BOD_5), total suspended solids (TSS), and pH. Additional domestic wastewater pollutants known to be in the discharge are total ammonia as nitrogen(ammonia) and fecal coliform (FC) bacteria. DEC adopted new regulations that require facilities that discharge to marine water to monitor enterococci bacteria, in addition to FC bacteria. Total residual chlorine (TRC) also is a pollutant of concern as Homer WWTF uses chlorine in its disinfection process.

The previous APDES permit identified additional pollutants of concern from expanded effluent testing conducted prior to reissuance and the required additional monitoring for specific parameters. Additional monitoring was required to provide a robust dataset to establish water quality-based effluent limit (WQBELs), if necessary. The parameters monitored in the previous APDES permit cycle were enterococci bacteria and total residual chlorine (TRC). Based on the additional monitoring results, these parameters remain as pollutants of concern, with monitoring required in the previous APDES permit to continue in this permit cycle.

2.4 Compliance History

DEC reviewed Discharge Monitoring Reports (DMRs) submitted by the City of Homer from September 2016 to February 2021 to determine the facility's compliance with effluent limits. The DMR review identified 2 effluent violations for FC.

Effluent limit exceedances for Outfall 001A are summarized in Table 2.

Table 2: Outfall 001A: Effluent Limit Exceedances

Parameter	Units [a]	Basis	Permit Limit	Number of Exceedances	Maximum Reported Value	Date of Maximum Reported Value
FC Bacteria	#/100ml	Daily maximum	800	1	1458	April 2017
FC Bacteria	#/100ml	Weekly Average	400	1	960	April 2017
FC Bacteria	#/100ml	Daily maximum	800	1	977	June 2017

The operation conditions of the facility were affected during April 2017 due to high flows caused by I&I as well as one of the two clarifiers was offline for repair of a broken sludge collector flight. Then again in June 2017 due to altered routine cleaning schedules of UV lamps and the effluent channel. Non-compliance notifications were submitted to the DEC for both limit exceedance events with full descriptions of what occurred any actions taken to reduce or prevent any further impact to environmental health.

Table 3 summarizes DEC Compliance and Enforcement actions at the City of Homer and Homer WWTF

Table 3: Compliance and Enforcement Actions

Date	Activity	Summary
April 17, 2018	Routine Inspection	Records review indicated effluent violations, but observations were made of appropriate signage, influent and effluent sampler, pH buffer solution was current, on-site lab was organized and clean and overall components of treatment were in good working condition and well maintained.
May 8, 2018	Compliance Letter	Violations from April 2016 through April 2018 included limit exceedances for FC and TRC as well as a failure to report
January 22, 2020	Routine Inspection	No violations were identified during the inspection

3.0 EFFLUENT LIMITS AND MONITORING REQUIREMENTS

3.1 Basis for Permit Effluent Limits

Per 18 AAC 83.015, the Department prohibits the discharge of pollutants to waters of the U.S. unless the permittee has first obtained a permit issued by the APDES Program that meet the purposes of AS 46.03 and is in accordance with the CWA Section 402. Per these statutory and regulatory provisions, the Permit includes

effluent limits that require the discharger to (1) meet standards reflecting levels of technological capability, (2) comply with 18 AAC 70 –WQS, and (3) comply with other state requirements that may be more stringent.

The CWA requires that the limits for a particular pollutant be the more stringent of either technology-based effluent limits (TBELs) or water quality-based effluent limits (WQBELs). TBELs are set according to the level of treatment that is achievable using available technology. A WQBEL is designed to ensure that the water quality standards of a waterbody are met. WQBELs may be more stringent than TBELs.

The permit contains a combination of both TBELs and WQBELs. The Department first determines if TBELs are required to be incorporated into the permit. TBELs for publicly owned treatment works (POTW), which apply to the Homer WWTF, are derived from the secondary treatment standards found in Title 40 Code of Federal Regulations (40 CFR) §133.102 and 40 CFR §133.105, adopted by reference at 18 AAC 83.010(e). The following section summarizes the proposed effluent limits. A more expansive technical and legal basis for the proposed effluent limits is provided in Appendix A Basis for Effluent Limitations.

3.2 Basis for Effluent and Receiving Water Monitoring

In accordance with AS 46.03.110(d), the Department may specify in a permit the terms and conditions under which waste material may be disposed. Monitoring in a permit is required to determine compliance with effluent limits. Monitoring may also be required to gather effluent and receiving water data to determine if additional effluent limits are required and/or to monitor effluent impact on the receiving waterbody quality. The permittee is responsible for conducting the monitoring and for reporting results on NetDMR or with the application for reissuance, as appropriate, to the Department. Fact Sheet Sections 3.3 through 3.4 summarizes monitoring requirements DEC has determined necessary to implement in the permit

3.3 Effluent Limits and Monitoring Requirements

Monitoring is required to determine compliance with effluent limitations and/or for use in future reasonable potential analysis (RPA). The permit requires monitoring of secondary treated domestic wastewater effluent that is discharged through Outfall 001A for flow, BOD_5, TSS, pH, TRC, ammonia, FC bacteria, enterococci, and ammonia. WQBEL's for ammonia have been revised based on the RPA, but the effluent limits for BOD5, TSS, pH, TRC and FC bacteria have all been carried forward in this reissuance. Effluent limits are based on the secondary treatment standards adopted in 18 AAC 83.010(e). This includes the permit requirement to monitor the influent for Bod_5 and TSS to calculate removal rates for these parameters. Further information outlining the details of the effluent limits and monitoring requirements for Outfall 001A can be found in Table 4 or see Appendix A.

Monitoring frequencies are based on the nature and effect of the pollutant, as well as a determination of the minimum sampling necessary to adequately monitor the facility's performance. The permittee has the option of taking more frequent samples than required under the permit. These samples must be used for averaging (for pollutants results reported on a monthly or weekly average) if they are conducted using the Department – approved test methods (found in 18 AAC 70 and 40 CFR Part 136, adopted by reference in 18 AAC 83.010).

For all effluent monitoring, the permittee must use a sufficiently sensitive Environmental Protection Agency (EPA) approved test method that quantifies the pollutants to a level lower than applicable limits or water quality standards or use the most sensitive test method available, per Title 40 Code of Federal Regulations (CFR) §136 (Guidelines Establishing Test Procedures for the Analysis of Pollutants), adopted by reference at 18 AAC 83.010(f)

Enterococci bacteria has report only requirements and the following summarizes the monitoring requirements.

The permit requires continued monitoring and reporting on Enterococci bacteria. Enterococci bacteria are indicator organisms of harmful pathogens recommended by the EPA to protect primary contact recreation for marine waters. The EPA Beaches Environmental Assessment and Coastal Health Act (BEACH Act) requires states and territories with coastal recreation waters to adopt enterococci bacteria criteria into their WQS. The WQS at 18 AAC 70.020(b)(14)(B) for contact recreation specifies that the enterococci bacteria concentration

shall not exceed 35 enterococci cfu/100mL, and not more than an 10% of the samples may exceed a concentration of 130 enterococci cfu/100mL. Contact recreation is defined as activities in which there is direct and intimate contact with water. These activities typically only take place during the summer season, May to September.

DEC reviewed enterococci bacteria monitoring data from September 2016 to June 2021. The results ranged from 1.0 cfu/100 mL to 117 cfu/100 mL during normal operations. It is reasonable to assume that enterococci bacteria, as demonstrated by the monitoring results from the prior permit, will continue to exceed water quality criteria; therefore, enterococci bacteria are included in the mixing zone. Monitoring as in the prior permit will be conducted monthly May-September, months in which Kachemak Bay is most likely to be used for primary contact recreation.

When evaluating the effluent to determine if WQBELs based on chemical-specific numeric criteria are needed, the Department projects the receiving waterbody concentration (RWC) for each pollutant of concern downstream of where the effluent enters the receiving waterbody. The chemical-specific concentration of the effluent and receiving waterbody and, if appropriate, the dilution available from the receiving waterbody, are factors used to project the RWC. If the projected concentration of the receiving waterbody exceeds the numeric criterion for a limited parameter, then there is reasonable potential (RP) that the discharge may cause or contribute to an excursion above the applicable WQS, and a WQBEL must be developed. If the projected concentration of the receiving waterbody is lower than the numeric criterion for a limited parameter, then there is not RP that the discharge may cause or contribute to an excursion above the applicable WQS and it is expected that the effluent will meet WQS at the point of discharge. The effluent limits that would be applied in the latter case are the WQS for the limited parameter.

Table 4: Outfall 001A: Effluent Limits and Monitoring Requirements

Parameter	Effluent Limits					Monitoring Requirements		
	Units [a]	Daily Minimum	Monthly Average	Weekly Average	Daily Maximum	Sample Location	Sample Frequency	Sample Type
Total Discharge Flow	mgd	N/A	0.88	N/A	Report	Effluent	Continuous	Recorded
Biochemical Oxygen Demand (BOD_5)	mg/L	N/A	30	45	60	Influent and Effluent [c]	2/Month	24-hour Composite [d]
	lbs/day [b]		220	330	440			Calculated
Total Suspended Solids (TSS)	mg/L	N/A	30	45	60	Influent and Effluent	2/Month	24-hour Composite
	lbs/day		220	330	440			Calculated
BOD_5 & TSS Minimum Percent (%) Removal	%	N/A	85 [e]	N/A	N/A	Influent and Effluent	1/Month	Calculated
pH	SU	6.5	N/A	N/A	8.5	Effluent	5/Week	Grab
Total Residual Chlorine (TRC) [f]	mg/L	N/A	0.0075	N/A	0.013	Effluent	Daily	Grab
Fecal coliform Bacteria (FC)	FC/ 100 mL	N/A	200 [g]	400 [g]	800 [h]	Effluent	1/Week	Grab
Enterococci	cfu/ 100 mL	N/A	N/A	N/A	Report [h]	Effluent	1/Month [i]	Grab
Total Ammonia, as N	mg/L	N/A	39	N/A	58	Effluent	1/Month	24-hour Composite
	lbs/day	N/A	286	N/A	425			

Footnotes:

a. Units: mgd = million gallons per day, mg/L = milligrams per liter, lbs/day = pounds per day, S.U. = standard units, °C= degrees Celsius, FC/100 mL = Fecal Coliform per 100 milliliters, cfu/100 mL = colony forming units per 100 milliliters, µg/L = micrograms per liter.

b. Loading in lbs/day = concentration (mg/L) x flow (mgd) x 8.34 (conversion factor).
All loading limits were calculated using a design flow rate of 1.3 mgd.

c. Limits apply to effluent. Report average monthly influent concentration. Influent and effluent composite samples shall be collected during the same
24-hour period.

d. See Appendix C for definition.

e. Minimum % Removal = [(monthly average influent concentration in mg/L – monthly average effluent concentration in mg/L) / (monthly average influent concentration in mg/L)] x 100. The monthly average percent removal must be calculated using the arithmetic mean of the influent value and the arithmetic mean of the effluent value for that month.

f. The TRC effluent limits are not quantifiable using EPA-approved analytical methods. DEC will use the minimum level (ML) of 0.1 mg/L as the compliance evaluation level for this parameter.

g. If more than one bacteria sample is collected within the reporting period, the average result must be reported as the geometric mean. When calculating the geometric mean, replace all results of zero, 0, with a one, 1. The geometric mean of "n" quantities is the "nth" root of the product of the quantities. For example, the geometric mean of 100, 200, and 300 is $(100 \text{ X } 200 \text{ X } 300)^{1/3} = 181.7$.

h. When only one sample is collected, the effluent limit cannot be exceeded. If ten or more samples are collected during the monthly reporting period, not more than 10% of the samples may exceed the effluent limit

i. One enterococci sample shall be collected each month, May through September, on the same day as a fecal coliform bacteria sample is collected.

3.4 Receiving Waterbody Limits and Monitoring

Kachemak Bay is protected for the following uses per 18 AAC 70.020(a): water supply for aquaculture, seafood processing and industrial activities; water recreation, both contact and secondary recreation; growth and propagation of fish, shellfish, other aquatic life, and wildlife; and harvesting for consumption of raw mollusks or other raw aquatic life. In the previous permit cycle, the City was required to monitor Kachemak Bay outside the authorized Homer WWTF mixing zone for pH, temperature, salinity, and ammonia. Receiving water monitoring data gathered from September 2016 thru December 2018 was analyzed and used in the reasonable potential analysis as part of the development of the current permit. Due to the robust data set submitted and that the DEC does not anticipate any significant variances in the ambient water monitoring station, the receiving water monitoring requirements will not be carried over in this next permit cycle.

4.0 RECEIVING WATERBODY

4.1 Description of Receiving Waterbody

Kachemak Bay is a 39 mile (63 kilometer) long arm of the southern portion of Cook Inlet, with an average depth of 25 fathoms (150 feet). Circulation in Kachemak Bay is influenced by the east to west flow of the Alaska Coastal Current in the Gulf of Alaska; water generally flows into Kachemak Bay on the southern shore, and out on the northern shore. Tidal flows in Kachemak Bay are extreme, with average vertical differences of 15 feet (4.6 meters). Tidal currents in the area of the discharge are estimated to be around two knots.

4.2 Outfall Description

The Homer WWTF continually discharges treated effluent into Kachemak Bay from Outfall 001A located at 59° 37’ 58” North latitude and 151° 32' 52" West longitude. The outfall terminus is a 20” outfall pipe fitted with a diffuser containing four ports to facilitate mixing of the effluent at the point of discharge that are at a depth of -10.18 feet mean lower low water (MLLW) and extends 2178 feet offshore.

4.3 Water Quality Standards

Section 301(b)(1)(C) of the CWA required the development of limits in permits necessary to meet water quality standards by July 1, 1977. Per 18 AAC 83.435, APDES permits must include conditions to ensure compliance with WQS. Additionally, regulations in 18 AAC 70 require that the conditions in permits ensure compliance with the WQS. The State’s WQS are composed of waterbody use classifications, numeric and/or narrative water quality criteria, and an Antidegradation Policy. The use classification system identifies the designated uses that each waterbody is expected to achieve. The numeric and/or narrative water quality criteria are the criteria deemed necessary by the state to support the designated use classification of each waterbody. The antidegradation policy ensures that the existing uses and the level of water quality necessary to protect the uses are maintained and protected.

Water bodies in Alaska are designated for all uses unless the water has been reclassified under 18 AAC 70.230 as listed under 18 AAC 70.230(e). Some waterbodies in Alaska can also have site–specific water quality criterion per 18 AAC 70.235, such as those listed under18 AAC 70.236(b). The receiving water for this discharge, Kachemak Bay, has not been reclassified, nor have site-specific water quality criteria been established. Therefore, existing uses and designated uses are the same and Kachemak Bay must be protected for all marine use classes listed in 18 AAC 70.020(a)(2). These marine water designated uses consist of the following: (A) water supply (aquaculture, seafood processing, and industrial), (B) water recreation (contact and secondary), (C) growth and propagation of fish, shellfish, other aquatic life, and wildlife, and (D) harvesting for consumption of raw mollusks or other raw aquatic life.

4.4 Water Quality Status of Receiving Water

Any part of a waterbody for which the water quality does not, or is not expected to meet applicable WQS is defined as a "water quality limited segment" and placed on the State's impaired waterbody list. Kachemak Bay is not included on any of the impaired water body lists catalogued in *Alaska's Final 2018 Integrated Water Quality Monitoring and Assessment Report*, June 23, 2020 (Alaska's 2018 Integrated Report).

4.5 Mixing Zone Analysis

In accordance with 18 AAC 70.240, the Department may authorize a mixing zone in a permit. Determination of the mixing zone requires an evaluation of critical conditions of the flow regimes of the receiving waterbody, effluent characterization and concentration projections, and discharge rates. These critical conditions are addressed in the permit application. A chronic mixing zone is sized to protect the ecology of the waterbody as a whole and an acute mixing zone is sized to prevent lethality to passing organisms.

DEC received the City of Homer's application for reissuance on March 8, 2021. As part of the application, the City requested a re-authorization of the previously authorized mixing zone for ammonia. The City had prepared a data summary of the effluent data from the monitoring required by the previous permit as well as the results of the expanded effluent monitoring and CORMIX inputs from the prior permit. As part of the mixing zone application and modeling review process, DEC also analyzed their most recent ambient monitoring data and DMR results from the previous five years. This was used in modeling the acute and chronic mixing zones using the Cornell Mixing Zone Expert System (CORMIX) version 12.0. CORMIX is a widely used and broadly accepted modeling tool for accurate and reliable point source mixing analysis. CORMIX predicts the distance at which a modeled parameter meets water quality criteria as well as the corresponding dilution at that point. Inputs to CORMIX included the maximum expected effluent concentration, acute and chronic water quality criteria, receiving water characteristics at the outfall such as depth and width of the receiving water at the outfall, wind velocity, and outfall and diffuser specifications, such as size, direction, and number of ports.

The City's consultant, GV Jones and Associates, facilitated retrieval of the data used in the initial mixing zone analysis and modeling done by DEC, to perform their own independent review at the request of the City, then provided a report to DEC, *2021 City of Homer RPA and Modeling Review* (SLR Mixing Zone Review), which was prepared by SLR Consulting. The SLR Mixing Zone review modeled the mixing zone using additional facility information and updated ambient current speed, which is one of the most influential variables in modeling a mixing zone. Acute and chronic aquatic life criteria were calculated for ammonia using data from the ambient water quality monitoring data and the *APDES Permits Reasonable Potential Analysis and Effluent Limits Development Guide*. The most stringent criteria for ammonia is the chronic criteria for the protection of aquatic life. The water quality criteria can be found in Appendix G of the Toxics Manual.

For the critical upstream concentrations of ammonia present in the receiving water, the 85th percentile of measured pollutant concentrations was used in the Reasonable Potential Analysis (RPA). For pH, temperature and salinity, the 85th percentile of the receiving water concentration was used to calculate the acute and chronic WQCs, used in the RPA. Ambient water data was utilized to calculate acute and chronic aquatic life criteria for ammonia, pH, temperature and salinity.

Ambient data and calculated WQC for ammonia are summarized in Table 5.

Table 5: Kachemak Bay Receiving Water Monitoring Results, September 2016 to December 2018

Parameter	Units [a]	Minimum Value	Maximum Value	Concentration Used in RPA Analysis	Calculated WQC for Aquatic Life
Ammonia, as Nitrogen	mg/L	ND [b]	0.319	0.300	1.3
pH	S.U.	6.6	8.1		
Temperature	º C	2	12.8		
Salinity	grams/kilogram	14	33.9		

Footnotes:

a) Units: µg/L=micrograms per liter, mg/L=milligrams per liter, S.U.=standard units, ºC=degrees Celsius.
b) ND= non-detect

The SLR Mixing Zone review analyzed the City's effluent data summary and subsequently performed their own Reasonable Potential Analysis (RPA) following the DEC's recommended RPA procedures (DEC 2009 and Tetra Tech 2013). In the analysis, SLR also determined that ammonia was the driving parameter for the mixing zone dimensions and determined after reviewing the diffuser as-built drawings that the mixing zone would be modeled as a radius for this permit cycle which the City concluded with as well. The City submitted a revised application and request to re-authorize their mixing zone to support SLR's review and proposed changes. DEC agrees with SLR's determination in that the dilution factor for the chronic mixing zone to be 60.3 with a radius of 163 meters that extends from the seafloor to the surface. The WQC may be exceeded within the authorized chronic mixing zones. All water quality criteria will be met and apply at the boundary of the chronic mixing zone. The acute mixing zone is defined as a circle, with a diameter of 8.5 m, centered on the outfall line over the diffuser and extends from the seafloor to the surface with a dilution of 7.2. Acute aquatic life criteria will be met and apply at and beyond the boundary of this smaller initial mixing zone surrounding the outfall.

Table 7 shows the dilution factors and mixing zone sizes used in the previous permit compared to the dilution factors and mixing zone sizes for this permit.

Table 6: Mixing Zone Dilution Factors (DF) and Sizes for Current Permit

Mixing Zone	Previous Permit [2016-2021]				Current Permit [2021-2026]			
	DF	Diameter (m)	Shape	Area (m^2)	DF	Radius (m)	Shape	Area (m^2)
Acute	10	1.2 x 9.3	Rectangle	11.16	7.2	8.5	Circle	227
Chronic	69	97 x 136	Rectangle	13,192	60.3	163	Circle	83,427

Figure 3 shows a map view of the chronic and acute mixing zones for the permit

According to EPA (1991) and 18 AAC 70.240, lethality to passing organisms would not be expected if an organism passing through the plume along the path of maximum exposure is not exposed to concentrations exceeding the acute criteria when averaged over a one-hour time period. Furthermore, the travel time of an organism drifting through the acute mixing zone must be less than approximately 15 minutes if a one-hour exposure is not to exceed the acute criterion. DEC determined that the travel time of an organism drifting through the acute mixing zone to be approximately 17 seconds; therefore, there will be no lethality to organisms passing through the acute mixing zone.

Other data required for the mixing zone modeling included: the input of receiving water characteristics at the outfall, such as the depth of the receiving water at the outfall, the ambient velocity, wind velocity, bank configuration and distance of the outfall from the bank, and other features. Based on the inputs, CORMIX predicted the distance at which the parameters would meet WQC as well as the corresponding dilution at the point. Table 7 provides a list of inputs used in the CORMIX modeling program.

Fact Sheet Appendix D outlines criteria that must be met in order for the Department to authorize a mixing zone. These criteria include the size of the mixing zone, treatment technology, existing uses of the waterbody, human consumption, spawning areas, human health, aquatic life, and endangered species. The following summarizes the Department's mixing zone analysis.

Figure 3: Homer WWTF Permit Chronic and Acute Mixing Zone

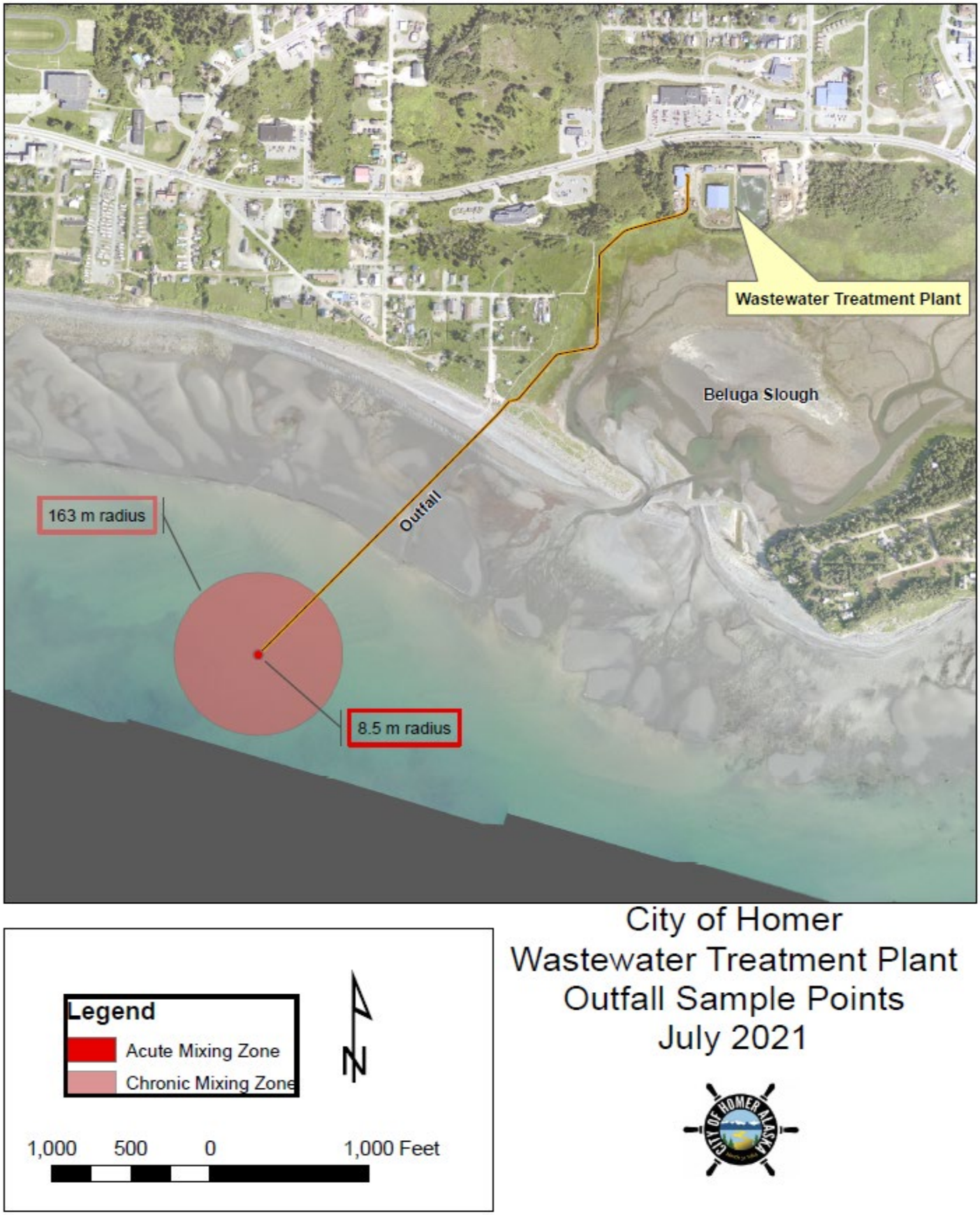

4.5.1 Size

In accordance with 18 AAC 70.240(k), the mixing zone must be as small as practicable.To ensure that the mixing zone is as small as practicable, SLR used more recent data, supplied to them by City of Homer, and CORMIX to model the chronic and acute mixing zones. The SLR review indicated that the current CORMIX guidance requires a diffuser of this type to be more accurately schematized as a single vertical 8" diameter port with an effective area matching the area of the four ports radially fanned out as shown on the as-built drawings. Defining the mixing zone in terms of a radius is common practice in tidally influenced marine environments and the radius size allows water quality criteria to be met while having less dilution than in the prior permit cycle. DEC reviewed and verified the modeling results.

18 AAC 70.240(b)(2) requires the Department to consider the characteristics of the effluent after treatment of the wastewater. Both DEC and SLR reviewed the most recent five years of effluent data from September 2016 through June 2021 to determine which parameters had reasonable potential to exceed water quality criteria at the end of pipe, and then which of the parameters required the most dilution to meet WQ criteria for the chronic and acute mixing zones. Ammonia required the most dilution to meet both chronic and acute aquatic life water criteria; therefore, Ammonia was modeled in CORMIX to determine the smallest practicable chronic mixing zone sizes.

Table 7 summarizes basic CORMIX inputs that were used to model the chronic and acute mixing zones for ammonia.

Table 7. Summary of DEC CORMIX Inputs

Parameter Modeled	Maximum Expected Concentration	Ambient Concentration	Chronic Water Quality Criterion	Acute Water Quality Criterion
Total Ammonia, as N	57.3 mg/L	0.3 mg/L	.95 mg/L	8.05 mg/L
Outfall and Receiving Waterbody Characteristics				
Discharge Geometry	Submerged Multiport Diffuser Discharge modeled as Single Port Discharges			
Discharge Location	Left Bank			
Outfall Length	663.85 meters (2178 ft)			
Port Diameter	.2033 meters			
Depth at Discharge	3.48 meters (11.43ft)			
Ambient Velocity	.3858 m/s high-acute, .0772 m/s low -acute .2058 m/s-chronic			
Wind Velocity	2 m/s			
Effluent Characteristics				
Flow Rate	0.88 mgd			
Temperature	13.5 º C			

4.5.2 Technology

In accordance with 18 AAC 70.240(c)(1), the Department finds that available evidence reasonably demonstrates that the wastewater at the Homer WWTF will be treated to remove, reduce, and disperse pollutants using methods found by the Department to be the most effective and technological and economical feasible, consistent with the highest statutory and regulatory treatment requirements.

Secondary treatment is provided by a deep-shaft activated sludge biological process. The treatment process includes primary treatment with mechanical bar screens and a grit chamber, two 30-inch diameter steel-cased shafts 500 feet below the surface, flotation clarifiers, and a UV radiation disinfection chamber. A backup/supplementary chlorination and de-chlorination system is also occasionally used when the UV system may not be operating optimally or when the facility receives heavy flow volumes.

4.5.3 Existing Use

In accordance with 18 AAC 70.240(c)(2) and (3) and 18 AAC 70.240(c)(4)(B) and (C), the mixing zone has been appropriately sized to fully protect the existing uses of Kachemak Bay. Kachemak Bay's existing uses and biological integrity have been maintained and protected under the terms of the reissued permit. Water quality criteria are developed to specifically protect the uses of the waterbody as a whole. The water quality criteria will be met prior to or at the boundary of the mixing zone, designated and existing uses in Kachemak Bay that are beyond the boundary of the mixing zones will be maintained and protected.

4.5.4 Human Consumption

In accordance with the conditions of the permit, and in accordance with 18 AAC 70.240(d)(6) the pollutants discharged cannot produce objectionable color, taste, or odor in aquatic resources harvested for human consumption; nor can the discharge preclude or limit established processing activities or commercial, sport, personal use, or subsistence fish or shellfish harvesting.

There is no indication that the pollutants discharged have produced objectionable color, taste, or odor in aquatic resources harvested for human consumption. Additionally, the discharge has not precluded or limited established processing activities or commercial, sport, personal use, or subsistence fish and shellfish harvesting. Signs are required to be posted to inform the public that certain activities such as harvesting of aquatic life for raw consumption and primary contact recreation should not take place in the mixing zone.

4.5.5 Spawning Areas

In accordance with 18 AAC 70.240(f), a mixing zone is not authorized in an area of anadromous fish spawning or resident fish for spawning redds for Arctic Grayling (*Thymallus arcticus*), northern pike (*Esox lucius*), inconnu/sheefish (*Stenodus leucichthys*) and all other whitefish in Alaska belonging to genera *Prosopium* and *Coregonus,* Arctic char (*Salvelinus alpinus*), Dolly Varden (*S. malma*), brook trout (*S. fontinalis*), rainbow trout (*Oncorhynchus mykiss*), cutthroat trout (*O. clarkia*), burbot *Lota*, landlocked coho salmon (*O.kisutch*), Chinook salmon (*O. tshawytscha*), and sockeye salmon (*O. nerka*).

The Homer WWTF mixing zone is not authorized in known spawning areas for anadromous fish or resident fish, spawning reds for chinook, coho, pink, chum and sockeye salmon. The Alaska Department of Fish and Game (ADF&G) Catalog of Waters Important for Spawning, Rearing or Migration of Anadromous Fishes-Southcentral Region, Effective June 1, 2021, and also access their Alaska Fish Resource Monitor maps at Alaska Fish Resource Monitor (arcgis.com). Neither of which identified any spawning or rearing areas in the vicinity of the Homer WWTF wastewater discharge outfall.

4.5.6 Human Health

In accordance with 18 AAC 70.240(d)(1), the mixing zone will not result in pollutants discharged at levels that will bioaccumulate, bioconcentrate, or persist above natural levels in sediments, water, or biota to significantly adverse levels, based on consideration of bioaccumulation and bioconcentration factors, toxicity, and exposure. 18 AAC 70.240(d)(2) states that the mixing zone may not present an unacceptable risk to human health from carcinogenic, mutagenic, teratogenic, or other effects as determined using risk assessment methods approved by DEC and consistent with 18 AAC 70.025.An analysis of the effluent data that was included with City's application for permit reissuance, DMR's, and the results of the RPA conducted on pollutants of concern indicated that the level of treatment is protective of human health. The effluent data was then used in

conjunction with applicable WQC, which serve the purpose of protecting human and aquatic life, to size the mixing zone to ensure all WQC are met in the waterbody at the boundary of the mixing zone.

4.5.7 Aquatic Life and Wildlife

In accordance with 18 AAC 70.240, the mixing zone authorized in the permit shall be protective of aquatic life and wildlife. The mixing zone does not form a barrier to migratory fish species or fish passage nor will does it result in a reduction of fish population levels. A toxic effect will not occur in the water column, sediments, or biota outside the boundaries of the mixing zones. The CORMIX mixing zone modeling conducted for this discharge to Kachemak Bay incorporated the most stringent water quality criteria in the models for protection of the growth and propagation of fish, shellfish, other aquatic life, and wildlife, and all water quality criteria will be met at the boundary of the authorized mixing zones.

4.5.8 Endangered Species

In accordance with 18 AAC 70.240(c)(4)(F), the mixing zone will not cause an adverse effect on threatened or endangered species (TES).

DEC contacted Jenna Malek with National Oceanic and Atmospheric Administration (NOAA) on August 2, 2021, to inquire about whether a discharge from the outfall from Homer WWTF located at 59° 37' 58" North and 151° 32' 52" West would impact any TES in that area under their jurisdiction. Jenna Malek responded the same day with a current list of marine mammals that could potentially be impacted.

- Beluga whale, Cook Inlet Distinct Population Segment (DPS) (E)
  - Cook Inlet Beluga Critical Habitat, Area 2
- Humpback whale, Mexico DPS (T) & Western North Pacific DPS (E)
- Fin whale (E)
- Steller sea lion, Western DPS (E)

DEC also contacted Doug Cooper with Unites States Fish and Wildlife Service USFWS on August 3, 2021, to request any concerns they may have regarding any TES in that area under their jurisdiction. Doug Cooper responded the same day with the recommendation that we consult their website, Information for Planning and Consultation (IPAC) located at https://ecos.fws.gov/ipac/ . After research with the IPAC tool, DEC determined that the outfall location was outside of any critical habitat area for TES.

No detrimental effects to fauna in the area have been documented with previously authorized mixing zones for the facility, nor does the mixing zone appear to pose an undesirable nuisance to aquatic life. The RPA and CORMIX modeling resulted in an overall decrease in the size of the mixing zone, further reducing the possibility for any threatened or endangered species potentially in the area to come into contact with the treated wastewater.

Due to the reduced size and short residence time of pollutants in the mixing zone, DEC has concluded that the mixing zones are sized to not cause an adverse effect on threatened or endangered species in the vicinity of the discharge. DEC will provide a copy of the permit and fact sheet to NOAA and USF&WS when it is publicly noticed. Any comments received from the agencies regarding endangered species will be considered prior to issuance of the permit.

5.0 ANTIBACKSLIDING

18 AAC 83.480 requires that "interim effluent limitations, standards, or conditions must be at least as stringent as the final effluent limitations, standards, or conditions in the previous permit, unless the circumstances on which the previous permit was based have materially and substantially changed since the permit was issued, and the change in circumstances would cause for permit modification or revocation and reissuance under 18 AAC 83.135." 18 AAC 83.480(c) also states that a permit may not be reissued "to contain an effluent limitation that is less stringent than required by effluent guidelines in effect at the time the permit is renewed or reissued."

Effluent limitations may be relaxed as allowed under 18 AAC 83.480, CWA §402(o) and CWA §303(d)(4). 18 AAC 83.480(b) allows relaxed limitations in renewed, reissued, or modified permits when there have been material and substantial alterations or additions to the permitted facility that justify the relaxation, or, if the Department determines that technical mistakes were made.

No reduction in limits has occurred in this next permit cycle. The effluent limitations in this permit reissuance are consistent with 18 AAC 83.480. Therefore, the permit effluent limitations, standards, and conditions in AK0021245 are as stringent as in the previously issued permit. Accordingly, no further backsliding analysis is required for this permit reissuance.

6.0 ANTIDEGRADATION

Section 303(d)(4) of the CWA states that, for water bodies where the water quality meets or exceeds the level necessary to support the waterbody's designated uses, WQBELs may be revised as long as the revision is consistent with the State's Antidegradation policy. The State's Antidegradation policy is found in the 18 AAC 70 Water Quality Standards (WQS) regulations at 18 AAC 70.015. The Department's approach to implementing the Antidegradation policy is found in 18 AAC 70.016 *Antidegradation implementation methods for discharges authorized under the federal Clean Water Act*. Both the Antidegradation policy and the implementation methods are consistent with 40 CFR 131.12 and approved by EPA. This section analyzes and provides rationale for the Department's decisions in the permit issuance with respect to the Antidegradation policy and implementation methods.

Using the policy and corresponding implementation methods, the Department determines a Tier 1 or Tier 2 classification and protection level on a parameter by parameter basis. A Tier 3 protection level applies to a designated water. At this time, no Tier 3 waters have been designated in Alaska.

18 AAC 70.015(a)(1) states that the existing water uses and the level of water quality necessary to protect existing uses must be maintained and protected (Tier 1 protection level).

The Kachemak Bay is not listed as impaired (Category 4 or 5) in *Alaska's 2018 Integrated Water Quality Monitoring and Assessment Report*; therefore, this antidegradation analysis conservatively assumes that the Tier 2 protection level applies to all parameters, consistent with 18 AAC 70.016(c)(1)

18 AAC 70.015(a)(2) states that if the quality of water exceeds levels necessary to support propagation of fish, shellfish, and wildlife and recreation in and on the water, that quality must be maintained and protected, unless the Department authorizes a reduction in water quality (Tier 2 protection level).

The Department may allow a reduction of water quality only after the specific analysis and requirements under 18 AAC 70.016(b)(5)(A-C), 18 AAC 70.016(c)(7)(A-F), and 18 AAC 70.016(d) are met. The Department's findings are as follows:

18 AAC 70.016(b)(5)

(A) *existing uses and the water quality necessary for protection of existing uses have been identified based on available evidence, including water quality and use related data, information submitted by the applicant, and water quality and use related data and information received during public comment;*

(B) *existing uses will be maintained and protected; and*

(C) *the discharge will not cause water quality to be lowered further where the department finds that the parameter already exceeds applicable criteria in 18 AAC 70.020(b), 18 AAC 70.030, or 18 AAC 70.236(b).*

18 AAC 70.020 and 18 AAC 70.050 specify the protected water use classes for the State; therefore, the most stringent water quality criteria found in 18 AAC 70.020 and in the *Alaska Water Quality Criteria Manual for Toxic and Other Deleterious Organic and Inorganic Substances* (DEC 2008) apply and were evaluated. This will ensure existing uses and the water quality necessary for protection of existing uses of the receiving waterbody are fully maintained and protected.

The permit places limits and conditions on the discharge of pollutants. The limits and conditions are established after comparing TBELs and WQBELs and applying the more restrictive of these limits. The water quality criteria, upon which the permit effluent limits are based, serve the specific purpose of protecting the existing and designated uses of the receiving water. WQBELs are set equal to the most stringent water quality criteria available for any of the protected water use classes. This also ensures that the resulting water quality at and beyond the boundary of any authorized mixing zone will fully protect all existing and designated uses of the receiving waterbody as a whole.

The Department concludes the terms and conditions of the permit will be adequate to fully protect and maintain the existing uses of the water and that the findings under 18 AAC 70.016(b)(5) are met.

18 AAC 70.016(c)

(c) ***Tier 2 analysis for the lowering or potential lowering of water quality not exceeding applicable criteria.*** *Tier 2 applies when the water quality for a parameter in a water of the United States within this state does not exceed the applicable criteria under 18 AAC 70.020(b), 18 AAC 70.030, or 18 AAC 70.236(b) and receives the protection under 18 AAC 70.015(a)(2).*

(3) *the department will not conduct a Tier 2 antidegradation analysis for*

(A) *reissuance of a license or general or individual permit for a discharge that the applicant is not proposing to expand;*

In the prior APDES permit cycle, DEC conservatively assumed that the discharge from the Homer WWTF into Kachemak Bay was a discharge to a Tier 2 waterbody and accordingly conducted a Tier 2 antidegradation analysis at that time. DEC determined that the Homer WWTF would meet the Antidegradation Policy and the Department's July 14, 2010, *Policy and Procedure Guidance for Interim Antidegradation Implementation Methods* requirements. The *Interim Guidance* has since been superseded by the 18 AAC 70.016 regulations.

18 AAC 70.016(c)(2)(A) states that when evaluating development of a license or general or individual permit for a discharge, the department will conduct a Tier 2 antidegradation analysis for a proposed new or expanded discharge. 18 AAC 70.990(75) states that new or expanded with respect to discharges means discharges that are regulated for the first time or discharges that are expanded such that they could result in an increase in a permitted parameter load or concentration or other changes in discharge characteristics that could lower water quality or have other adverse environmental impacts. Discharge is further defined in 18 AAC 83.990(22) as a discharge of a pollutant.

All pollutants regulated under the permit were also regulated under the prior permit, therefore, not considered a new discharge. The discharge covered under AK0021245 is not expanded from the previous permit. There will not be an increase in a permitted parameter load, concentration, or other change in discharge characteristics that could lower water quality or have other adverse environmental impacts.

18 AAC 70.016(c)(3)(A) states that the Department will not conduct a Tier 2 antidegradation analysis for reissuance of a license or general or individual permit for a discharge that the applicant is not proposing to expand. Therefore, consistent with 18 AAC 70.016(c)(2)(A) and 18 AAC 70.16(c)(3)(A), DEC is not conducting a Tier 2 antidegradation analysis for this permit reissuance.

7.0 OTHER PERMIT CONDITIONS

7.1 Quality Assurance Project Plan

The permittee is required to develop procedures to ensure that the monitoring data submitted are accurate and to explain data anomalies if they occur. The permittee is required to update, implement and/or maintain the Quality Assurance Project Plan (QAPP). The QAPP shall consist of standard operating procedures the permittee must follow for collecting, handling, storing and shipping samples; laboratory analysis; precision and accuracy requirements; data reporting, including method detection/reporting limits; and quality assurance/quality control

criteria. The permittee is required to amend the QAPP whenever any procedure addressed by the QAPP is modified. The plan shall be retained on site and made available to the Department upon request.

7.2 Operation and Maintenance Plan

The permit requires the permittee to properly operate and maintain all facilities and systems of treatment and control. Proper operation and maintenance is essential to meeting discharge limitations, monitoring requirements, and all other permit requirements at all times. The permittee is required to review and update the OMP that was required under the previous permit within 180 days of the effective date of the final permit to ensure that it includes appropriate best management practices and pollution prevention measures. The plan shall be retained on site and made available to the Department upon request.

7.3 Industrial User Survey

18 AAC 83.340 requires POTWs to identify and locate all Significant Industrial Users (SIUs) that discharge process wastewaters and associated pollutants to their wastewater treatment system. General and specific pretreatment prohibitions at 40 CFR 403.5, adopted by reference at 18 AAC 83.010(g)(2), contain prohibitions that apply to each industrial user introducing pollutants into a POTW, whether or not the industrial user is subject to other National Pretreatment Standards, or any national, State, or local Pretreatment Requirements. Therefore, in order to assess whether an industry or business has the potential to violate any general or specific pretreatment prohibition, and to determine if a pretreatment program should be developed and/or if pretreatment requirements should be included in the Homer WWTF wastewater discharge permit, the permittee is required to submit with their permit reissuance application, Form 2A, a list of those industries or businesses that discharge and/or have the potential to discharge non-domestic wastewater to the Homer WWTF''s collection system. DEC may request further information on specific industries or business to assist in this evaluation.

7.4 Electronic Discharge Monitoring Report

The permittee must submit DMR data electronically through NetDMR per Phase I of the E-Reporting Rule (40 CFR 127) upon the effective date of the permit. Authorized persons may access permit information by logging into the NetDMR Portal (https://cdxnodengn.epa.gov/oeca-netdmr-web/action/login). DMRs submitted in compliance with the E-Reporting Rule are not required to be submitted as described in permit APPENDIX A – Standard Conditions unless requested or approved by the Department. Any DMR data required by the Permit that cannot be reported in a NetDMR field (e.g. mixing zone receiving water data, etc.), shall be included as an attachment to the NetDMR submittal. DEC has established an e-Reporting Information website at https://dec.alaska.gov/water/compliance/electronic-reporting-rule that contains general information about this new reporting format. Training materials and webinars for NetDMR can be found at https://netdmr.zendesk.com/home.

Phase II of the E-Reporting rule will integrate electronic reporting for all other reports required by the Permit (e.g., Annual Reports and Certifications) and implementation is expected to occur during the term of the permit. Permittees should monitor DEC's E-Reporting Information website (http://dec.alaska.gov/water/compliance/electronic-reporting-rule) for updates on Phase II of the E-Reporting Rule and will be notified when they must begin submitting all other reports electronically. Until such time, other reports required by the Permit may be submitted in accordance with permit APPENDIX A – Standard Conditions.

7.5 Standard Conditions

APPENDIX A of the permit contains standard regulatory language that must be included in all APDES permits. These requirements are based on the regulations and cannot be challenged in the context of an individual APDES permit action. The standard regulatory language covers requirements such as monitoring, recording, reporting requirements, compliance responsibilities, and other general requirements.

8.0 OTHER LEGAL REQUIREMENTS

8.1 Ocean Discharge Criteria Evaluation

Section 403(a) of the CWA, Ocean Discharge Criteria, prohibits the issuance of a permit under Section 402 of the CWA for a discharge into the territorial sea, the water of the contiguous zone, or the oceans except in compliance with Section 403. Permits for discharges seaward of the baseline of the territorial seas must comply with the requirements of Section 403, which include development of an Ocean Discharge Criteria Evaluation (ODCE).

Interactive nautical charts depicting Alaska's baseline plus additional boundary lines are available at https://www.charts.noaa.gov/ChartCatalog/Alaska.html and interactive maps at https://alaskafisheries.noaa.gov/mapping/arcgis/rest/services/NOAA_Baseline/MapServer.

The charts and maps are provided for information purposes only. The U.S. Baseline committee makes the official determinations on baseline. Ocean Discharge Criteria are not applicable for marine discharges to areas located landward of the baseline of the territorial sea.

A review of the baseline line maps revealed that the Homer WWTF Outfall 001A terminus is positioned landward of the baseline of the territorial sea; therefore, Section 403 of the CWA does not apply to the permit, and an ODCE analysis is not required to be completed for this permit reissuance. Further, the permit requires compliance with WQS such that 40 CFR 125.122(b) is met and therefore the discharge is presumed not to cause unreasonable degradation of the marine environment.

8.2 Endangered Species Act

The Endangered Species Act (ESA) requires federal agencies to consult with the NOAA, USFWS and NMFS to determine whether their actions could beneficially or adversely affect any threatened or endangered species or habitats. NMFS is responsible for administration of the ESA for listed cetaceans, seals, sea lions, sea turtles, anadromous fish, marine fish, marine plants, and corals. All other species (including polar bears, walrus, and sea otters) are administered by the USFWS.

As a state agency, DEC is not required to consult under Section 7 with these federal agencies regarding permitting actions; however, DEC voluntarily contacted the agencies to notify them of the proposed permit issuance and to obtain listings of threatened and endangered species near the discharge.

DEC contacted USFWS on August 2, 2021, and NOAA on August 3, 2021, respectively, and requested them to identify any threatened or endangered species under their jurisdiction in the vicinity of the Homer WWTF outfall.

On August 2, 2021, USFWS contacted DEC and responded the same day with the recommendation that we consult their website, Information for Planning and Consultation (IPAC) located at https://ecos.fws.gov/ipac/ . After research with the IPAC tool, DEC determined that the outfall location was outside of any critical habitat area for TES.

On August 3, 2021, NOAA contacted DEC and stated that the TES and critical habitat in that area that could potentially be affected are as follows: Beluga whale, Cook Inlet Distinct Population Segment (DPS) (E)- Cook Inlet Beluga Critical Habitat, Area 2, Humpback whale, Mexico DPS (T) & Western North Pacific DPS (E), Fin whale (E) and the Steller sea lion, Western DPS (E).

This fact sheet and the permit will be submitted to the agencies for review during the public notice period and any comments received from these agencies will be considered prior to issuance of the permit.

8.3 Essential Fish Habitat

The Magnuson-Stevens Fishery Conservation and Management Act (January 21, 1999) designates EFH in waters used by anadromous salmon and various life stages of marine fish under NMFS jurisdiction. EFH refers to those waters and associated river bottom substrates necessary for fish spawning, breeding, feeding, or growth to

maturity—including aquatic areas and their associated physical, chemical, and biological properties that are used by fish and may include aquatic areas historically used by fish. Spawning, breeding, feeding, or growth to maturity covers a species' full life cycle necessary for fish from commercially-fished species to spawn, breed, feed, or grow to maturity.

Section 305(b) of the Magnuson-Stevens Act 916 USC 1855(b)) requires federal agencies to consult NMFS when any activity proposed to be permitted, funded, or undertaken by a federal agency may have an adverse effect on designated EFH as defined by the Act. As a State agency, DEC is not required to consult with NMFS regarding permitting actions, but voluntarily contacts NMFS to notify them of the proposed permit issuance and to obtain listings of EFH in the area.

DEC contacted NMFS on August 25,2021 to provide them with early notification of DEC's intent to reissue AK0021245 and to provide them the opportunity to share concerns with DEC regarding EFH.

This fact sheet and the permit will be submitted to the agencies for review during the public notice period and any comments received from these agencies will be considered prior to issuance of the permit.

8.4 Sludge (Biosolids) Requirements

Sludge means any solid, semi-solid, or liquid residue removed during the treatment of municipal wastewater or domestic sewage. State and federal requirements regulate the management and disposal of sewage sludge (biosolids). The permittee must consult both state and federal regulations to ensure proper management of the biosolids and compliance with applicable requirements.

8.4.1 State Requirements

The Department separates wastewater and biosolids permitting. The permittee should contact the Department's Solid Waste Program for information regarding state regulations for biosolids. The permittee can access the Department's Solid Waste Program web page for more information and who to contact.

8.4.2 Federal Requirements

EPA is the permitting authority for the federal sewage sludge regulations at 40 CFR Part 503. Biosolids management and disposal activities are subject to the federal requirements in Part 503. The Part 503 regulations are self-implementing, which means that a permittee must comply with the regulations even if no federal biosolids permit has been issued for the facility.

A POTW is required to apply for an EPA biosolids permit. The permittee should ensure that a biosolids permit application has been submitted to EPA. In addition, the permittee is required to submit a biosolids permit application to EPA for the use or disposal of sewage sludge at least 180 days before this APDES permit expires in accordance with 40 CFR §§122.21(c)(2) and 122.21(q) [see also 18 AAC 83.110(c) and 18 AAC 83.310, respectively]. The application form is NPDES Form 2S and can be found on EPA's website, www.epa.gov, under NPDES forms. A completed NPDES Form 2S should be submitted to:

U.S. Environmental Protection Agency
Region 10, NPDES Permits Unit OWW-130
Attention: Biosolids Contact
1200 Sixth Avenue, Suite 900
Seattle, WA 98101-3140

The EPA Region 10 telephone number is 1-800-424-4372. Information about EPA's biosolids program and CWA Part 503 is available at www.epa.gov and either search for 'biosolids' or go to the EPA Region 10 website link and search for 'NPDES Permits'.

8.5 Permit Expiration

The permit will expire five years from the effective date of the permit.

9.0 References

Alaska Department of Environmental Conservation, (ADEC), 2020. Integrated Water Quality Monitoring and Assessment Report. Integrated Water Quality Monitoring and Assessment Report (alaska.gov) Assessed November 12, 2020.

ADEC, 2018. 18 AAC 70, Water quality standards, as amended through April 6, 2018.

ADEC, 2014. Alaska Pollutant Discharge Elimination System permits reasonable potential analysis and effluent limits development guide

ADEC, 2008. Alaska Water Quality Criteria Manual for Toxics and Other Deleterious Organic and Inorganic Substances, as amended through December 12, 2008.

Alaska Department of Fish and Game. 2020. Catalog of waters important for spawning, rearing, or migration of anadromous fishes-Southcentral Region, effective June 1, 2020.

Doneker, Robert and Jirka, Gerhard. 2007. CORMIX user manual, U.S. Environmental Protection Agency, EPA-823-K-07-001, December 2007

USEPA, "EPA Regions 8, 9 and 10 Toxicity Training Tool," January 2010, pdf files located at: http://www.epa.gov/region8/water/wet/ToxTrainingTool10Jan2010.pdf

USEPA, "Technical Support Document for Water Quality-based Toxics Control," EPA/505/2-90-001, USEPA Office of Water, Washington, DC, March 1991.

USEPA, "Water Quality Standards Handbook: Second Edition," EPA-823-B-94-005a, USEPA, Washington, DC, August 1994.

USEPA, "Alaska DEC NPDES Permit Writer's Course" Reference Manual. May, 2019.

APPENDIX A: BASIS FOR EFFLUENT LIMITATIONS

A.1 Statutory and Regulatory Basis

18 Alaska Administrative Code (AAC) 70.010 prohibits conduct that causes or contributes to a violation of the water quality standards (WQS). 18 AAC 15.090 requires that permits include terms and conditions to ensure criteria are met, including operating, monitoring, and reporting requirements.

The regulations require the permitting authority to make this evaluation using procedures that account for existing controls on point and nonpoint sources of pollution, the variability of the pollutant in the effluent, species sensitivity (for toxicity), and where appropriate, dilution in the receiving waterbody. The limits must be stringent enough to ensure that WQS are met and must be consistent with any available wasteload allocation (WLA). The Clean Water Act (CWA) requires a Publicly Owned Treatment Works (POTWs) to meet effluent limits based on available wastewater treatment technology, specifically, secondary treatment effluent limit standards found at Title 40 Code of Federal Regulations (CFR) 133, adopted by reference at 18 AAC 83.010(e). The Alaska Department of Environmental Conservation (Department or DEC) may find, by analyzing the effect of an effluent discharge on the receiving waterbody, that secondary treatment effluent limits are not sufficiently stringent to meet Alaska WQS. In such cases, the Department is required to develop more stringent water quality-based effluent limits (WQBELs), which are designed to ensure that the WQS of the receiving waterbody are met.

Secondary treatment effluent limits for POTWs do not limit every pollutant that may be present in the effluent. Limits have only been developed for five-day biochemical oxygen demand (BOD_5), total suspended solids (TSS), and pH. Effluent from a POTW may contain other pollutants, such as bacteria, ammonia, or metals, depending on the type of treatment system used and the quality of the influent to the POTW. When technology- based effluent limits (TBELs) do not exist for a pollutant expected to be present in the effluent, the Department must determine if the pollutant may cause or contribute to an exceedance of a water-quality criterion for the waterbody. If a pollutant causes or contributes to an exceedance of a water-quality criterion, a WQBEL for the pollutant must be established in the permit. Table A-1 summarizes the basis for effluent limits contained in the permit. Further details for each effluent limit follow in this section.

Table A-1-Basis for Effluent Limits

Parameter	Units [a]	EFFLUENT LIMITS				
		Daily Minimum	Monthly Average	Weekly Average	Daily Maximum	Basis for Limit
Flow	mgd	---	0.880	---	Report	18 AAC 72.245
BOD_5	mg/L	---	30	45	60	18 AAC 83.010(e) 18 AAC 83.540
	lbs/day	---	220	330	440	
TSS	mg/L	---	30	45	60	18 AAC 83.010(e) 18 AAC 83.540
	lbs/day	---	220	330	440	
BOD_5 & TSS Minimum Percent (%) Removal	%	85				18 AAC 83.010(e)
pH	SU	6.5	---	---	8.5	18 AAC 70.020(b)(6)
Total Residual Chlorine	mg/L	---	.0075	---	.013	18 AAC 70.020(b)(23)(C)
Fecal Coliform Bacteria	FC/100 mL	---	200	400	800	18 AAC 72.990(21) 18 AAC 83.435(b)
Ammonia	mg/L	---	39	---	58	18 AAC 83.435(d) 18 AAC 83.530(2) 18 AAC 83.540
	lbs/day	---	286	---	425	

Footnote:

a. Units: mgd = million gallons per day, mg/L = milligrams per liter, lbs/day = pounds per day, SU= standard units, FC/100 mL = Fecal Coliform per 100 milliliters, µg/L= micrograms per liter

A.2 Secondary Treatment Effluent Limitations

The CWA requires a POTW to meet requirements based on available wastewater treatment technology. Section 301 of the CWA established a required performance level, referred to as "secondary treatment," that all POTWs were required to meet by July 1, 1977. The secondary treatment standards in 40 CFR §133.102, which the Department has adopted in 18 AAC 83.010(e), are TBELs that apply to all municipal wastewater treatment plants and identify the minimum level of effluent quality attainable by application of secondary treatment in terms of BOD_5, TSS, and pH. In addition to the federal secondary treatment regulations in 40 CFR Part 133, the State of Alaska requires maximum daily limitations (MDLs) of 60 milligrams per liter (mg/L) for BOD_5 and TSS in its own secondary treatment regulations [18 AAC 72.990(59)]. The secondary treatment effluent limits are listed in Table A- .

Table A- 2: Secondary Treatment Effluent Limits

Parameter	Units	Average Monthly Limit	Average Weekly Limit	Maximum Daily Limit	Average Monthly Minimum Removal
BOD_5	mg/L	30	45	60	85%
TSS	mg/L	30	45	60	
pH	s.u.	6.0 – 9.0 s.u. at all times			

A.3 Mass-Based Limitations

Alaska Pollutant Discharge Elimination Systems (APDES) regulations at 18 AAC 83.540 require that effluent limits be expressed in terms of mass unless they cannot appropriately be expressed by mass, if it is infeasible, or if the limits can be expressed in terms of other units of measurement. In addition, 18 AAC 83.520 requires that effluent limits for a POTW be calculated based on the design flow of the facility in million gallons per day (mgd). The design flow of the Homer Wastewater Treatment Facility is .880 mgd. The Department used the design flow to calculate loading limits in the permit for BOD_5, TSS, and ammonia. Expressing limitations in terms of concentration as well as mass encourages the proper operation of a facility at all times. The mass based limits are expressed in pounds per day (lbs/day) and are calculated as follows:

Mass based limit (lbs/day) = concentration limit (mg/L) × design flow (mgd) × 8.34

Where: 8.34 is a conversion factor with units (lbs x L) / (mg x gallon x 10^6)

A.4 Water Quality Based Effluent Limits

WQBELs included in Alaska Pollutant Discharge Elimination System (APDES) permits are derived from WQS. APDES regulation 18 AAC 83.435(a)(2) requires that permits include WQBELs that can achieve WQS established under CWA Section 303, including state narrative criteria for water quality. The State's WQS are composed of use classifications, numeric and/or narrative water quality criteria, and an antidegradation policy. The use classification system identifies the designated uses that each waterbody is expected to achieve. The numeric and/or narrative water quality criteria are the criteria deemed necessary by the state to support the designated use classification of each waterbody.

Designated uses are those uses specified in WQS for each waterbody or segment whether or not they are being attained [40 CFR Section 131.3(f)]. Existing uses are those uses actually attained in a waterbody on or after November 28, 1975, whether or not they are included in the WQS [40 CFR Section 131.3]. Waterbodies in Alaska are designated for all uses unless the water has been reclassified under 18 AAC 70.230 as listed under 18 AAC 70.230(e). Some waterbodies in Alaska can also have site–specific water quality criteria per 18 AAC 70.235, such as those listed under 18 AAC 70.236(b).

The receiving waterbody for the discharge, Kachemak Bay, has not been reclassified, nor have site-specific water quality criteria been established. Therefore, Kachemak Bay must be protected for all marine water designated uses. The marine water designated uses are: water supply for aquaculture, seafood processing and industrial; contact and secondary recreation; growth and propagation of fish, shellfish, other aquatic life, and wildlife; and harvesting for consumption of raw mollusks or other raw aquatic life

A.4.1 Reasonable Potential Analysis

The Department used the process described in the Technical Support Document (TSD) for Water Quality-Based Toxics Control (Environmental Protection Agency, 1991) and DEC's guidance, APDES *Permits Reasonable Potential Analysis and Effluent Limits Development Guide* (June 30, 2014) to evaluate the Homer Wastewater Treatment Facility (WWTF) effluent. Discharge monitoring reports (DMRs) from September 2016 to June 2021 and Form 2A Application to Discharge Effluent and Expanded Effluent Testing Data were reviewed to identify pollutants of concern. Pollutants of concern are those pollutants that already have a TBEL or WQBEL for a particular pollutant, pollutants with a total maximum load waste load allocation or watershed analysis, pollutants identified as present in the effluent through monitoring, or those pollutants that are likely to be present in the effluent based on the nature of the operation. The monitoring of the Homer WWTF's effluent as reported in the above documents, revealed the presence of ammonia at levels above water quality criteria; therefore, the pollutant is a pollutant of concern and was selected for further reasonable potential analysis (RPA).

When evaluating the effluent to determine if WQBELs based on chemical-specific numeric criteria are needed, the Department projects the receiving waterbody concentration for each pollutant of concern

downstream of where the effluent enters the receiving waterbody. The chemical-specific concentration of the effluent and receiving waterbody and, if appropriate, the dilution available from the receiving waterbody, are factors used to project the receiving waterbody concentration. If the projected concentration of the receiving waterbody exceeds the numeric criterion for a limited parameter, then there is a reasonable potential that the discharge may cause or contribute to an excursion above the applicable water quality standard, and a WQBEL must be developed.

The Department may authorize a small volume of receiving water to provide dilution of the effluent; this volume is called a mixing zone. Mixing zone allowances will increase the allowable mass loadings of the pollutant to the waterbody. A mixing zone can be used only when there is adequate receiving waterbody flow volume, and the concentration of the pollutant of concern in the receiving waterbody is below the numeric water quality criterion necessary to protect the designated uses of the waterbody.

A.4.2 Specific Water Quality-Based Effluent Limits

A.4.2.1 *pH*

Alaska WQS at 18 AAC 70.020(b)(18)(C) states that the pH water quality criteria for the growth and propagation of fish, shellfish, other aquatic Life, and wildlife for marine water may not be less than 6.5 or greater than 8.5. Standard Units (SU).

DEC reviewed pH monitoring data from September 2016 to June 2021. During this time period the minimum pH value reported was 6.5 SU and the maximum pH value reported was 7.9 SU. The previous permit required a minimum of 6.5 SU and a maximum of 8.5 SU. Therefore, the pH limits of the prior permit are carried forward in the reissued permit

A.4.2.2 *Fecal Coliform (FC) Bacteria*

Alaska WQS at 18 AAC 70.020(b)(14)(D) states that the FC bacteria criteria for the harvesting for consumption of raw mollusks or other raw aquatic life the geometric mean of samples may not exceed 14 FC/100 mL, and not more than 10% of the samples may exceed a FC most probable number (MPN) of 43 FC/100 mL.

DEC reviewed FC bacteria monitoring data for Outfall 001A from September 2016 to June 2021. The results ranged from 1.9 FC/100 mL to 1458 FC/100 mL. The previous permit limits of an average month limit (AML) of 200 FC/100 mL, an average weekly limit (AWL) of 400 FC/100 mL, and a maximum daily limit (MDL) of 800 FC/100mL. The AWL was exceeded once and the MDL was exceeded twice during the last permit cycle.

FC bacteria can be reasonably expected to exceed water quality criteria. A mixing zone is required to meet the water quality criteria of 14 FC/100 mL AML and 43 FC/100 mL MDL. At a maximum expected FC bacteria concentration of 800 FC/ 100 mL, FC bacteria requires a dilution factor of 18.6. Because ammonia requires more dilution (60.3) to meet WQ criteria than FC bacteria, ammonia drives the chronic mixing zone again for this permit cycle, and FC bacteria is included in the chronic mixing zone sized for ammonia

DEC multiplied the chronic mixing zone dilution factor by the FC bacteria WQ criteria and obtained an AML of 844 FC/100 mL and a MDL of 2592 FC/100 mL. DEC then compared these limits with the previously discussed AML of 200 FC/100 mL and the MDL of 800 FC/100 mL and selected the more stringent limits for the permit. An AWL of 400 FC/100 mL is selected as there is not a comparable FC water quality criterion. The selected limits are protective of WQ criteria at the boundary of the mixing zone.

Therefore, based on the facility's consistent ability to produce an effluent capable of meeting the FC bacteria concentration limits required of the vast majority of secondary treatment facilities throughout the state, and compliance with the State's definition of disinfection at 18 AAC 72.990(21(A)(B), the

FC bacteria limits are carried forward from the previous permit. Monitoring of FC bacteria concentrations will be assessed for compliance with Alaska water quality criteria at 18 AAC 70.020(b)(14)(D.

A.4.2.3 *Total Ammonia (as Nitrogen)*

Total ammonia is the sum of ionized (NH4+) and un-ionized ammonia (NH3). Temperature, pH, and salinity affect which form, NH4+ or NH3 is present. NH3 is more toxic to aquatic organisms than NH4+ and predominates with higher temperature and pH. Biological wastewater treatment processes reduce the amount of total nitrogen in domestic wastewater; however, without advanced treatment, wastewater effluent may still contain elevated levels of ammonia as nitrogen. Excess ammonia as nitrogen in the environment can lead to dissolved oxygen depletion, eutrophication, and toxicity to aquatic organisms.

DEC derived ammonia criteria from the *Alaska Water Quality Criteria Manual for Toxics and Other Deleterious Organic and Inorganic Substances (DEC, 2008)*. DEC used the 85th percentile of the pH, temperature, and salinity receiving water data collected by the City from Kachemak Bay from September 2016 to December 2018 to establish an acute ammonia water quality criterion of 8.35 mg/L and a chronic ammonia water quality criterion of 1.25 mg/L. Effluent ammonia monitoring from September 2016 to June 2021 results ranged from 7.36 mg/L to 50.5 mg/L.

Because the City's ammonia monitoring results indicated exceedances for both acute and chronic water quality criteria; ammonia was selected for RPA which demonstrate that there is reasonable potential for ammonia to exceed water quality criteria at the end of pipe. Since there is reasonable potential for ammonia to exceed water quality criteria at the end of the pipe, and because ammonia is the driving parameter in the authorized mixing zone, WQBELs were developed for ammonia (MDL 58 mg/L, AML 39 mg/L) that are protective of water quality criteria at the boundary of the mixing zone.

18 AAC 83.530(d) requires effluent limits from a continuously discharging POTW to be stated as average weekly and average monthly limits unless impracticable. Secondary treatment standards at 18 AAC 83.605 establishes AWLs as being 1.5 times the AML. Following this precedent, the AWL for ammonia is derived by multiplying ammonia's AML of 39 mg/L 1.5 times to obtain an AWL of 58 mg/L. However, the Homer WWTF produces an effluent with concentrations well below 58 mg/L. The maximum reported ammonia between September 2016 and June 2021 was 50.5 mg/L and the average monthly for this same time period was 28 mg/L. Additionally, the monitoring frequency for ammonia in this permit is monthly and applying a weekly limit that is well above Homer WWTF's performance to a parameter that is monitored monthly is impracticable. Additionally, 58 mg/L was calculated in their RPA as being their MDL. Therefore, based on the reasons above an AWL for ammonia is impracticable and will not be applied in this permit.

See Appendix B for details on reasonable potential determination and Appendix C for details on permit limit derivation.

A.4.2.4 *Total Residual Chlorine*

The WQS at 18 AAC 70.020(b)(23)(C) defines TRC concentrations for aquatic life for marine water, as the concentration of substances in water may not exceed the numeric criteria for aquatic life for marine water shown in the *Alaska Water Quality Criteria Manual for Toxic and other Deleterious Organic and Inorganic Substances* (Toxics Manual) which corresponds to a TRC chronic limit of 0.0075 mg/L, and the acute limit of 0.013 mg/L.

Homer WWTF primarily uses ultraviolet (UV) radiation for disinfection; however, if the UV system is not operating optimally, or if the facility is receiving heavy flow volumes, the City may use chlorine for disinfection, which is then followed by dichlorination.

DEC reviewed the TRC monitoring data between September 2016 and June 2021. During this time period, the reported TRC value never exceeded the compliance concentration/minimum detection threshold level of <0.1 mg/L. DEC determined in this analysis that the TRC does not have reasonable potential to exceed water quality criteria at the end of the pipe. Therefore, the TRC limits of the prior permit are carried forward in the reissued permit.

APPENDIX B. REASONABLE POTENTIAL DETERMINATION

The following describes the process the Alaska Department of Environmental Conservation (the Department or DEC) used to determine if the discharge authorized in the draft permit has the reasonable potential to cause or contribute to a violation of Alaska Water Quality Standards (WQS). The Department used the process described in the *Technical Support Document* (TSD) *for Water Quality-Based Toxics Control* (Environmental Protection Agency, 1991) and DEC's guidance, *Alaska Pollutant Discharge Elimination System Permits Reasonable Potential Analysis and Effluent Limits Development Guide* (June 30, 2014) (RPA Guide) to determine the reasonable potential for any pollutant to exceed a water quality numeric criterion.

To determine if there is reasonable potential for the discharge to cause or contribute to an exceedance of water quality criteria for a given pollutant, the Department compares the maximum projected receiving waterbody concentration to the criteria for that pollutant. Reasonable potential to exceed exists if the projected receiving waterbody concentration exceeds water quality criteria, and a water quality-based effluent limit (WQBEL) must be included in the permit (18 Alaska Administrative Code 83.435).

The ambient concentration in the mass balance equation is based on a reasonable worst-case estimate of the pollutant concentration upstream from the discharge. For criteria that are expressed as maxima, the 85th percentile of the ambient data is generally used as an estimate of the worst case. If ambient data is not available, DEC uses 15% of the most stringent given pollutant's criteria as a worst-case example. Ammonia is used as an example to demonstrate the reasonable potential determination process.

B.1 Mass Balance

For a discharge to a flowing waterbody, the maximum projected receiving waterbody concentration is determined using a steady state model represented by the following mass balance equation:

$$C_d Q_d = C_e Q_e + C_u Q_u \qquad \text{(Equation B-1)}$$

Where,

C_d = Receiving waterbody concentration downstream of the effluent

discharge C_e = Maximum projected effluent concentration

C_u = Assumed receiving waterbody ambient

concentration Q_d = Receiving waterbody flow rate =

$Q_e + Q_u$

Q_e = Effluent flow rate (set equal to the design flow of the wastewater treatment facility)

Q_u = Receiving waterbody flow rate

When the mass balance equation is solved for C_d, it becomes:

$$C_d = \frac{C_e Q_e + C_u Q_u}{Q_e + Q_u} \qquad \text{(Equation B-2)}$$

The above form of the equation is based on the assumption that the discharge is rapidly and completely mixed with the receiving waterbody. If a mixing zone based on a percentage of the critical flow in the receiving waterbody is authorized based on the assumption of incomplete mixing with the receiving waterbody, the equation becomes:

$$C_d = \frac{C_e Q_e + C_u (Q_U \times MZ)}{Q_e + (Q_u \times MZ)} \qquad \text{(Equation B-3)}$$

Where, MZ = the fraction of the receiving waterbody flow available for dilution. Where mixing is rapid and complete, MZ is equal to 1 and equation C-2 is equal to equation C-3 (i.e., all of the critical low flow volume is available for mixing). If a mixing zone is not authorized, dilution is not considered when projecting the receiving waterbody concentration, and

$$C_d = C_e \qquad \text{(Equation B-4)}$$

In other words, if a mixing zone is not authorized, the Department considers only the concentration of the pollutant in the effluent regardless of the upstream flow and concentration. If the concentration of the pollutant in the effluent is less than the WQS numeric criteria, the discharge cannot cause or contribute to a water quality violation for that pollutant. In this case, the mixing or dilution factor (% MZ) is equal to zero and the mass balance equation is simplified to $C_d = C_e$.

Equation B-2 can be simplified by introducing a dilution factor (D):

$$D = \frac{Q_e + Q_u}{Q_e} \qquad \text{(Equation B-5)}$$

After the D simplification, this becomes:

$$C_d = \frac{(C_e - C_u)}{D} + cu \qquad \text{(Equation B-6)}$$

B.2 Maximum Projected Effluent Concentration

To calculate the maximum projected effluent concentration, the Department used the procedure described in section 3.3 of the TSD, "*Determining the Need for Permit Limits with Effluent Monitoring Data*" and the process described in section 2.4 of DEC's RPA Guide. In this procedure, the 99th percentile of the effluent data is the maximum projected effluent concentration which is used in the calculation of the maximum projected receiving waterbody concentration.

Since there are a limited number of data points available, the 99th percentile is calculated by multiplying the maximum observed effluent concentration (MOC) by a reasonable potential multiplier (RPM). The RPM is the ratio of the 99th percentile concentration to the MOC and accounts for the statistical uncertainty in the effluent data. The RPM is calculated from the coefficient of variation (CV) of the data and the number of data points.

The CV is defined as the ratio of the standard deviation of the data set to the mean. When fewer than 10 data points are available, the TSD and DEC's RPA Guide recommends making the assumption that the CV is equal to 0.6. A CV value of 0.6 is a conservative estimate that assumes a relatively high variability. In the example of ammonia, the Department used ProUCL, a statistical software program, to determine a CV of 0.2856. ProUCL indicated that the data set follows a gamma statistical distribution. Therefore, the RPM equation in section 2.4.2.1 of the RPA Guide is used to determine the RPM for ammonia.

$$RPM = \frac{\mu_n + z_{99}\,\sigma}{\mu_n + p_n\,\sigma} \qquad \text{(Equation B-7)}$$

Where,

z_{99} = the z − statistic at the 99th percentile =

2.326 μ_{nn} = mean calculated by ProUCL =

28.810

$\sigma =$ the standard deviation calculated by ProUCL $= 8.228$

$pp_{nn} =$ the z $-$ statistic at the 95th percent confidence level of $(1 - \frac{1}{0.95})_{nn} = 0.951$

$nn =$ number of valid data samples $= 54$

RPM $= 1.1$

The maximum expected concentration (MEC) is determined by multiplying the MOC by the RPM:

$$\text{MEC} = (\text{RPM})(\text{MOC}) \qquad \text{(Equation B-8)}$$

MOC = 50.5 milligrams per liter

(mg/L) In the case of ammonia,

MEC = (1.1)(50.5) = 55.5 mg/L

Comparison with ammonia water quality criteria

In order to determine if RP exists for this discharge to exceed water quality criteria, the highest projected concentration is compared with the most stringent water quality criteria.

MEC = 55.5 mg/L > 8.35 mg/L (acute ammonia criterion) and 1.25 mg/L (chronic ammonia

criterion) YES, there is RP for ammonia to violate water quality criteria

Since there is RP for the effluent to cause an exceedance of water quality criteria for protection of aquatic life, and because ammonia is the parameter requiring the most dilution of pollutants that demonstrate reasonable potential to exceed water quality criteria, a WQBEL for ammonia is required. See Appendix C for that calculation.

Table B-1 summarizes the data, multipliers, and criteria used to determine reasonable potential to exceed water quality criteria. For each parameter, the MEC equals the maximum observed effluent concentration times the RPM producing a number based on wastewater treatment facility performance, which was used to determine if there is a reasonable potential for the effluent to exceed WQS.

Table B-1- Reasonable Potential Determination at the End of Pipe

Parameter	Max Observed Effluent Conc.	Number of Samples	Coefficient of Variation (CV)	Reasonable Potential Multiplier (RPM)	Max Expected Effluent Conc. (MEC)	Most Stringent Water Quality Criterion	Reasonable Potential (yes or no)
Ammonia as N (mg/L)	50.5	54	0.2	1.1	55.5	8.35 (acute) 1.25(chronic)	yes

APPENDIX C. SELECTION OF EFFLUENT LIMITS

If the Alaska Department of Environmental Conservation (the Department or DEC) does not authorize a mixing zone, water quality standards (WQS) numeric criteria are applied at the end of the pipe, and technology-based effluent limits (TBELs) are selected for those parameters that are solely technology based.

When DEC authorizes a mixing zone, parameters are identified in the mixing zone that will require dilution to meet WQS numeric criteria. If there are TBELs for an identified parameter in the mixing zone, TBELs apply at the end of the pipe, and WQS numeric criteria for that parameter, apply at the boundary of the mixing zone. If the reasonable potential analysis (RPA) requires the development of water-quality based effluent limits (WQBELs) for specific parameters in order to protect human health criteria at the boundary of the mixing zone, WQBELs are applied as end-of-pipe effluent limits. Those parameters that are not identified in the authorized mixing zone, must meet applicable water quality numeric criteria at the end of pipe. In the absence of water quality criteria for a particular pollutant, such as for 5-day biochemical oxygen demand (BOD_5) and total suspended solids (TSS), TBELs are applied as end-of pipe effluent limits.

In the case of the Homer Wastewater Treatment Facility (WWTF), ammonia demonstrated reasonable potential to exceed at the end of pipe and required the most dilution to meet water quality criteria at the boundary of the authorized mixing zone; therefore, the Department developed WQBELs for ammonia.

C.1 Effluent Limit Calculation

Once the Department determines that the effluent has a reasonable potential to exceed a WQS, a WQBEL for the pollutant is developed. The Department used the process described in the *Technical Support Document* (TSD) *for Water Quality-Based Toxics Control* (Environmental Protection Agency, 1991) and DEC's guidance, *Alaska Pollutant Discharge Elimination System RPA and Effluent Limits Development Guide* (June 30, 2014) (RPA Guide) to calculate WQBELs for ammonia. The first step in calculating WQBELs is the development of a wasteload allocation WLA for the pollutant.

C.2 Mixing Zone-based WLA

When the Department authorizes a mixing zone for the discharge, the WLA is calculated using the available dilution, background concentrations of the pollutant, and the WQS. For human health criteria, the WLA is applied directly as an average monthly limit (AML). The maximum daily limit (MDL) is then calculated from the AML by applying a multiplier.

C.3 "End-of-Pipe" WLAs

In many cases, there is no dilution available, either because the receiving waterbody exceeds the criteria or because the Department does not authorize a mixing zone for a particular pollutant. When there is no dilution available, the criterion becomes the WLA. Establishing the criterion as the WLA ensures that the permittee's discharge does not contribute to an exceedance of the criterion. When a human health criterion applies to a pollutant, the chronic dilution factor is used to calculate a WLA.

C.4 Permit Limit Derivation

The Department applies the statistical approach described in Chapter 5 of the TSD to calculate the maximum daily limit (MDL) and average monthly limit (AML). This approach takes into account effluent variability (using the coefficient of variation (CV)) and sampling frequency.

The MDL is based on the CV of the data and the probability basis, while the AML is dependent on these two variables and the monitoring frequency. As recommended in the TSD, the Department used a

probability basis of 95% for the AML calculation and 99% for the MDL calculation.The following is a summary of the steps to derive WQBELs from WQS numeric criteria for pollutants that have reasonable potential to exceed water quality numeric criteria. These steps are found in the RPA Guide and the guidance's accompanying Microsoft Excel RPA Tool. The guidance and tool were used to calculate the MDL and AML for ammonia in the Homer WWTF permit. Ammonia is illustrated below as an example.

Step 1- Determine the WLA

The first step in developing a WQBEL is to develop a wasteload allocation (WLA) for the pollutant. A WLA is the concentration or loading of a pollutant that the permittee may discharge without causing or contributing to an exceedance of water quality criteria or a total maximum daily load in the receiving waterbody.

In cases where a mixing zone is not authorized, either because the receiving waterbody already exceeds the criterion, the receiving waterbody flow is too low to provide dilution, or for some other reason one is not authorized, the criterion becomes the WLA. Establishing the criterion as the WLA ensures that the permittee will not cause or contribute to an exceedance of the criterion.

The acute and chronic aquatic life criteria are converted to WLAs using the following equation:

$$WLA_{a,c,hh} = \left(WQC_{a,c,hh}\right)\left(D_{a,c,hh}\right) + C_s\left(1 - D_{a,c,hh}\right)$$

$$WLA_{a,c,hh} = WQC_{a,c,hh}\left(\frac{Q_d + Q_s}{Q_d}\right) + C_s\left(1 - \left[\frac{Q_d + Q_s}{Q_d}\right]\right)$$

Where: $D_{a,c} = Dilution = \frac{(Q_d + Q_s)}{Q_d}$

$D_{hh}(Dilution\ [Human\ Health]) = D_c\ (Dilution[Chronic\ Aquatic\ Life])$

$Q_s = Critical\ Upstream\ Flow$

$Q_d = Critical\ Discharge\ Flow$

$C_s = Critical\ Upstream\ Concentration$

$WLA_{a,c,hh} = Wasteload\ Allocation\ (acute, chronic, or\ human\ health)$

$WQC_{a,c,hh} = C_r = Water\ Quality\ Criterion(acute, chronic, or\ human\ health)$

For ammonia,

$D_a = 7.2$

$D_c = 60.3$

$C_s = 0.300$

$WLA_a = 58.26$

$WLA_c = 57.59$

$WQC_a = 8.4$ (rounded up)

$WQC_c = 1.3$ (rounded up)

Step 2 - Determine the Long-Term Average (LTA)

The WLAs are converted to LTAs using multipliers that are derived from equations in section 5.4 of the TSD:

$$LTA_a = WLA_a * exp(0.5\sigma^2 - z_{99}\sigma)$$

$$LTA_a = WLA_a * exp(0.5\sigma^2 - z_{99}\sigma)$$

Where:

$$z_{99} = the\ z - statistic\ at\ the\ 99^{th} percentile = 2.326$$

$$LTA_a\ only: \sigma = ln[CV^2 + 1]^{1/2}$$

$$LTA_a\ only: \sigma^2 = ln[CV^2 + 1]$$

$$LTA_c\ only: \sigma_4 = ln\left[\left(\frac{CV^2}{4}\right) + 1\right]^{1/2}$$

$$LTA_c\ only: \sigma_4^2 = ln\left[\left(\frac{CV^2}{4}\right) + 1\right]$$

$$CV = coefficient\ of\ variation$$

For ammonia:

$LTA_a = 31.5$

$LTA_c = 41.8$

Step 3 – Choosing the More Limiting LTA

To protect a waterbody from both acute and chronic effects, the more limiting of the two LTAs is used to derive the effluent limits. In the case of ammonia, the LTA_a is more limiting.

Step 4 - Calculate the Permit Limits

The MDL and AML are calculated using the following equations that are found in Table 5-2 of the TSD:

$$MDL_{aquatic\ life} = LTA * exp(z_{99}\sigma - 0.5\sigma^2)$$

Where:

$z_{99} = the\ z - statistic\ at\ the\ 99^{th} percentile = 2.326$

$\sigma_n = ln[CV^2 + 1]^{1/2}$

$\sigma_n^2 = ln[CV^2 + 1]$

$\sigma_n^2 = lCV = coefficient\ of variation$

$$AML_{aquatic\ life} = LTA * exp(z_{95}\sigma_n - 0.5\sigma_n^2)$$

Where:

$z_{99} = the\ z - statistic\ at\ the\ 95^{th} percentile = 1.645$

$\sigma_n = ln\left[\left(\frac{CV^2}{n}\right) + 1\right]^{1/2}$

$\sigma_n^2 = ln\left[\left(\frac{CV^2}{n}\right) + 1\right]$

$CV = coefficient\ of\ variation = \frac{standard\ deviation}{mean}$

$n = number\ of\ samples\ per\ month$

For ammonia:

DML= 58 mg/L

AML = 39 mg/L

Appendix D. MIXING ZONE ANALYSISCHECKLIST

The purpose of the Mixing Zone Checklist is to guide the permit writer through the mixing zone regulatory requirements to determine if all the mixing zone criteria at 18 AAC 70.240 are satisfied, as well as provide justification to authorize a mixing zone in an Alaska Pollutant Discharge Elimination System permit. See Fact Sheet Section 4.7 for the Homer Wastewater Treatment Facility mixing zone analysis.

Criteria	Description	Resources	Regulation
Size	Is the mixing zone as small as practicable? **If yes, mixing zone may be approved as proposed or authorized with conditions.**	Technical Support Document for Water Quality-Based Toxics Control DEC's Reasonable Potential Analysis Guidance Environmental Protection Agency's Permit Writers' Manual CORMIX	**18 AAC 70.240 (k)**
Technology	Were the most effective technological and economical methods used to disperse, treat, remove, and reduce pollutants? **If yes, mixing zone may be approved as proposed or authorized with conditions.**		**18 AAC 70.240 (c)(1)**
Low Flow Design	**For river, streams, and other flowing fresh waters.** - Determine low flow calculations or documentation for the applicable parameters.		**18 AAC 70.240(l)**
Existing Use	Does the mixing zone… (1) maintain and protect designated and existing uses of the waterbody as a whole? **If yes, mixing zone may be approved as proposed or authorized with conditions.**		**18 AAC 70.240(c)(2)**
	(2) impair overall biological integrity of the waterbody? **If yes, mixing zone may be approved as proposed or authorized with conditions.**		**18 AAC 70.240(c)(3)**
	(3) create a public health hazard that would preclude or limit existing uses of the waterbody for water supply or contact recreation? **If yes, mixing zone may be approved as proposed or authorized with conditions.**		**18 AAC 70.240(c)(4)(B)**
	(4) preclude or limit established processing activities or established commercial, sport, personal use, or subsistence fish and shellfish harvesting?		**18 AAC 70.240(c)(4)(C)**

Criteria	Description	Resources	Regulation
	If yes, mixing zone may be approved as proposed or authorized with conditions.		
Human consumption	Does the mixing zone… (1) produce objectionable color, taste, or odor in aquatic resources harvested for human consumption? **If yes, mixing zone may not be approved.**		**18 AAC 70.240(d)(6)**
Spawning Areas	Does the mixing zone… (1) discharge in a spawning area for anadromous fish or Arctic grayling, northern pike, rainbow trout, lake trout, brook trout, cutthroat trout, whitefish, sheefish, Arctic char (Dolly Varden), burbot, and landlocked coho, king, and sockeye salmon? **If yes, mixing zone may not be approved.**		**18 AAC 70.240(f)**
Human Health	Does the mixing zone… (1) contain bioaccumulating, bioconcentrating, or persistent chemicals above natural levels to significantly adverse levels? **If yes, mixing zone may not be approved.**		**18 AAC 70.240(d)(1)**
	(2) contain chemicals expected to present a unacceptable risk to human health from carcinogenic, mutagenic, teratogenic, or other effects as determined using risk assessment methods approved by the Department? **If yes, mixing zone may not be approved.**		**18 AAC 70.240(d)(2)**
	(3) occur in a location where the department determines that a public health hazard reasonably could be expected? **If yes, mixing zone may be approved as proposed or authorized with conditions.**		**18 AAC 70.240(k)(4)**
Aquatic Life	Does the mixing zone… (1) cause a toxic effect in the water column, sediments, or biota outside the boundaries of the mixing zone? **If yes, mixing zone may be approved as proposed or authorized with conditions.**		**18 AAC 70.240(c)(4)(A)**

Criteria	Description	Resources	Regulation
	(2) result in a reduction in fish or shellfish population levels? **If yes, mixing zone may be approved as proposed or authorized with conditions.**		**18 AAC 70.240(c)(4)(D)**
	(3) result in permanent or irreparable displacement of indigenous organisms? **If yes, mixing zone may be approved as proposed or authorized with conditions.**		**18 AAC 70.240(c)(4)(E)**
	(4) form a barrier to migratory species or fish passage? **If yes, mixing zone may be approved as proposed or authorized with conditions.**		**18 AAC 70.240(c)(4)(G)**
	(5) result in undesirable or nuisance aquatic life? **If yes, mixing zone may not be approved.**		**18 AAC 70.240(d)(5)**
	(6) prevent lethality to passing organisms; or exceed acute aquatic life criteria at and beyond the boundaries of a smaller initial mixing zone surrounding the outfall, the size of which shall be determined using methods approved by the Department? **If no, mixing zone may not be approved.**		**18 AAC 70.240(d)(7)** **18 AAC 70.240(d)(8)**
Endangered Species	Are there threatened or endangered species (T/E spp) at the location of the mixing zone? If yes, are there likely to be adverse effects to T/E spp based on comments received from the United States Fish and Wildlife Service or National Oceanic and Atmospheric Association. If yes, will conservation measures be included in the permit to avoid adverse effects? **If yes, mixing zone may be approved as proposed or authorized with conditions.**		**18 AAC 70.240(c)(4)(F)**